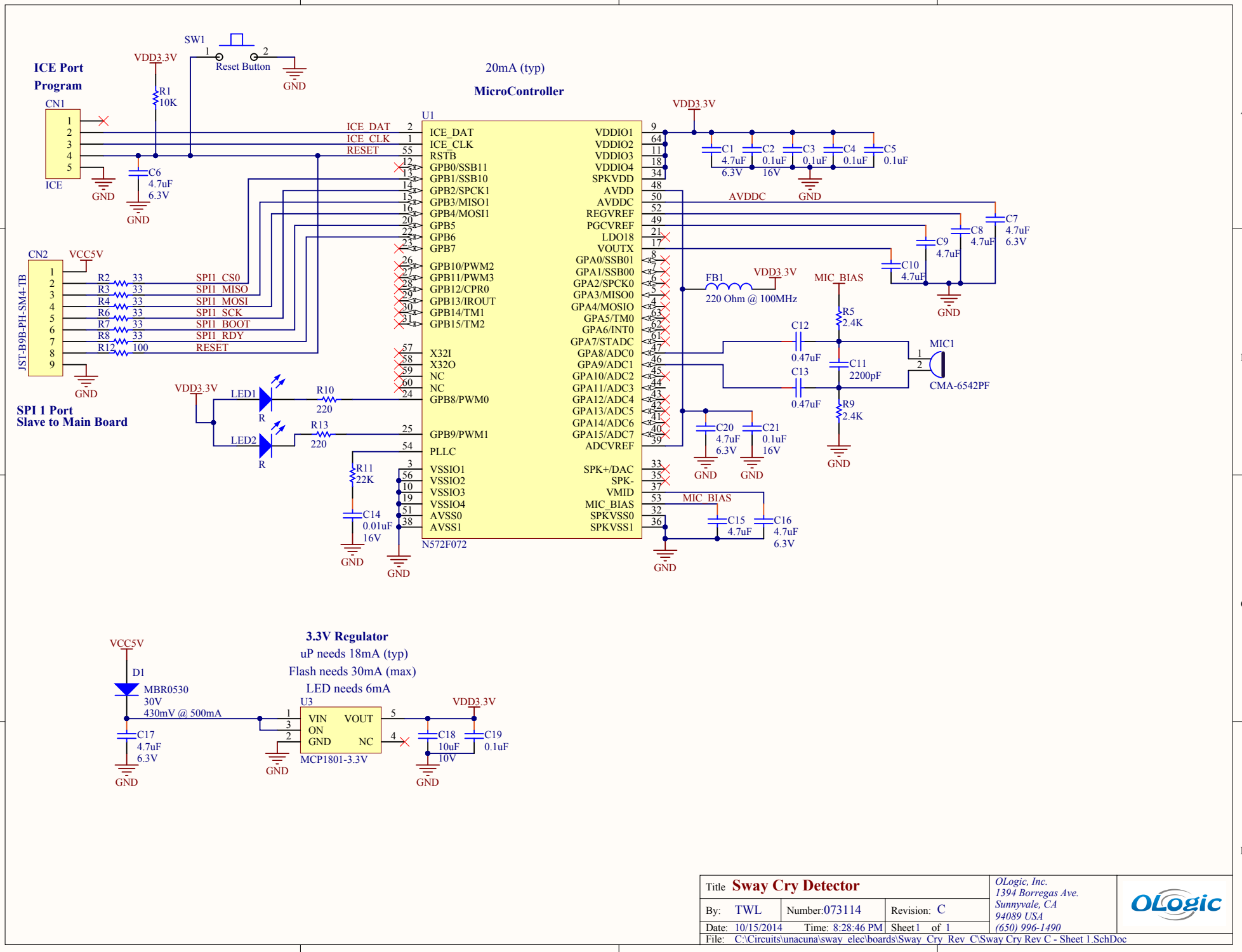
ICE Port
Program
CN1
ICE
VDD3.3V
R1
10K
SW1
Reset Button
GND
C6
4.7uF
6.3V
20mA (typ)
MicroController
U1
ICE_DAT
ICE_CLK
RESET
ICE_DAT
ICE_CLK
RSTB
GPB0/SSB11
GPB1/SSB10
GPB2/SPCK1
GPB3/MISO1
GPB4/MOSI1
GPB5
GPB6
GPB7
GPB10/PWM2
GPB11/PWM3
GPB12/CPR0
GPB13/IROUT
GPB14/TM1
GPB15/TM2
X32I
X32O
NC
NC
GPB8/PWM0
GPB9/PWM1
PLLC
VSSIO1
VSSIO2
VSSIO3
VSSIO4
AVSS0
AVSS1
VDDIO1
VDDIO2
VDDIO3
VDDIO4
SPKVDD
AVDD
AVDDC
REGVREF
PGCVREF
LDO18
VOUTX
GPA0/SSB01
GPA1/SSB00
GPA2/SPCK0
GPA3/MISO0
GPA4/MOSIO
GPA5/TM0
GPA6/INT0
GPA7/STADC
GPA8/ADC0
GPA9/ADC1
GPA10/ADC2
GPA11/ADC3
GPA12/ADC4
GPA13/ADC5
GPA14/ADC6
GPA15/ADC7
ADCVREF
SPK+/DAC
SPK-
VMID
MIC_BIAS
SPKVSS0
SPKVSS1
N572F072
C1 4.7uF 6.3V
C2 0.1uF 16V
C3 0.1uF
C4 0.1uF
C5 0.1uF
AVDDC
C7 4.7uF 6.3V
C8 4.7uF
C9 4.7uF
C10 4.7uF
FB1
220 Ohm @ 100MHz
MIC_BIAS
R5 2.4K
C12 0.47uF
C13 0.47uF
C11 2200pF
MIC1
CMA-6542PF
R9 2.4K
C20 4.7uF 6.3V
C21 0.1uF 16V
C15 4.7uF
C16 4.7uF 6.3V
CN2
VCC5V
JST-B9B-PH-SM4-TB
R2 33 SPI1_CS0
R3 33 SPI1_MISO
R4 33 SPI1_MOSI
R6 33 SPI1_SCK
R7 33 SPI1_BOOT
R8 33 SPI1_RDY
R12 100 RESET
SPI 1 Port
Slave to Main Board
LED1
LED2
R10 220
R13 220
R11 22K
C14 0.01uF 16V
VCC5V
D1
MBR0530
30V
430mV @ 500mA
C17 4.7uF 6.3V
3.3V Regulator
uP needs 18mA (typ)
Flash needs 30mA (max)
LED needs 6mA
U3
VIN
ON
GND
VOUT
NC
MCP1801-3.3V
C18 10uF 10V
C19 0.1uF
Title Sway Cry Detector
By: TWL
Number: 073114
Revision: C
Date: 10/15/2014
Time: 8:28:46 PM
Sheet 1 of 1
File: C:\Circuits\unacuna\sway_elec\boards\Sway_Cry_Rev_C\Sway Cry Rev C - Sheet 1.SchDoc
OLogic, Inc.
1394 Borregas Ave.
Sunnyvale, CA
94089 USA
(650) 996-1490
OLogic