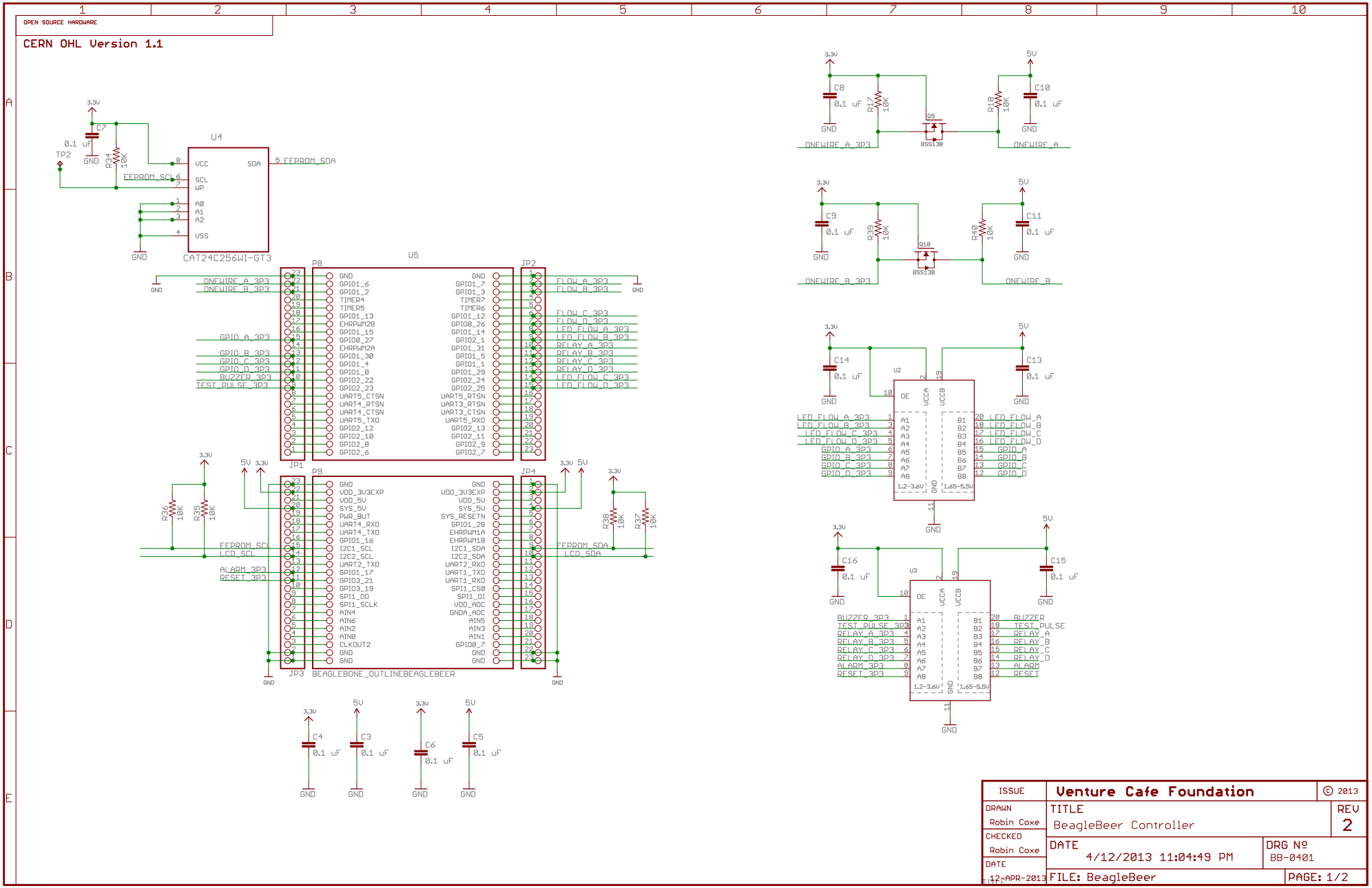
OPEN SOURCE HARDWARE
CERN OHL Version 1.1
U4
CAT24C256WI-GT3
U5
BEAGLEBONE_OUTLINEBEAGLEBEER
U2
U3
Venture Cafe Foundation
© 2013
TITLE
BeagleBeer Controller
REV
2
DRAWN
Robin Coxe
CHECKED
Robin Coxe
DATE
12-APR-2013
DATE
4/12/2013 11:04:49 PM
DRG Nº
BB-0401
FILE: BeagleBeer
PAGE: 1/2

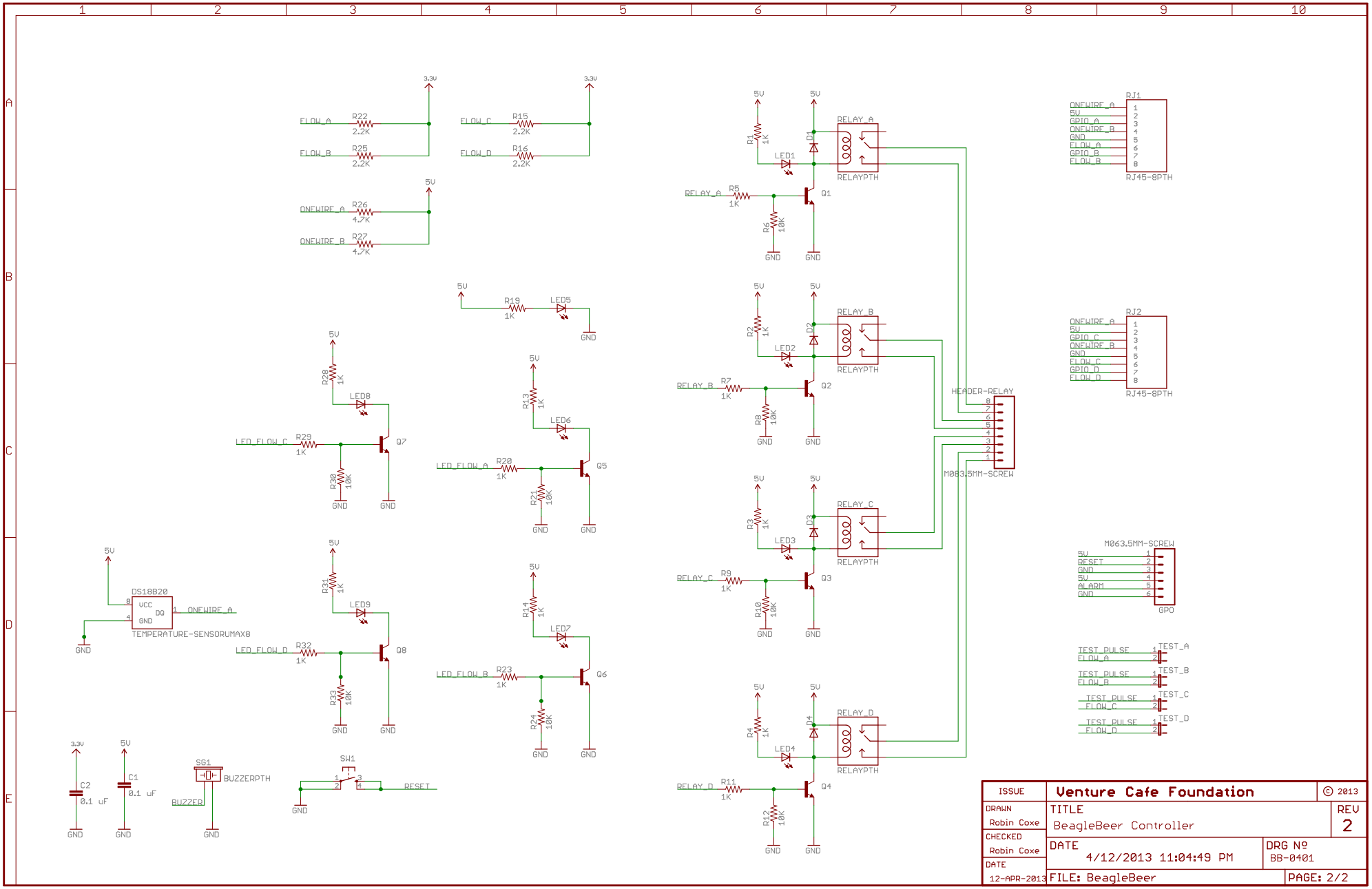

4/12/2013 11:08:58 PM f=0.61 c:\close-haul\github\kegboard\hw\BeagleBeer\BeagleBeer.sch (Sheet: 2/2)