TWIN 400 T.1

CORTA ENDEDORA

ESQUEMAS ELÉCTRICOS

código máquina	***=TW4***
trabajo	***4607***
pedido	***COM17279***
cliente	***CORRUGADORA GUATEMA***
edición	***29/06/2017***

FOSBER *s.p.a.* ... simply better
via Provinciale per Camaiore, 27/28 - 55060 Monsagrati (Lucca) - ITALIA
T. +39.0583.3891 - F. +39.0583.389205/385567
E-mail info@fosber.it Web site www.fosber.it
Cod.Fisc. e P.IVA 00429870462

INDICE PRINCIPAL

TABLERO ELÉCTRICO DI POTENCIA

=TW4+Q0

TABLERO ELÉCTRICO DI LÓGICA

=TW4+Q1

=TW4+Q2

CONSOLA DE SALIDA

=TW4+C0

CONSOLA DE MANDO STAND ALONE

=TW4+C1

CONEXIONES MÓDULOS CAN OPEN

=TW4+B0

CONEXIONES WEB DIRECTOR

=TW4+B2

CONEXIONES ENTRE TABLERO ELÉCTRICOS

=TW4+N0

RAYA MATERIAL

=TW4+P0

CONFIGURACION MÁQUINA

3 ROBOT HENDEDOR.	☐
5 ROBOT HENDEDOR.	☐
EJE AUXILIAR	☐
WEB DIRECTOR	☑
RECORTES CONTINUOS	☐
EDGE GUIDE FOSBER	☑
CORTE DESDE ABAJO	☐
CORTE DESDE ARRIBA	☑
	☐

IDENTIFICACIÓN EQUIPO

placa de identificación	**=TW4+Q0**

DATOS DE PLACA [CEI EN 60204-1, IEC 60204-1]

sigla máquina	**=TW4**		tensión nominal	**460** V AC
tipo máquina	**TWIN 400 T.1**		número de las fases	**3**
N° esquema eléctrico	**=TW4+Q0-103**		frecuencia (f)	**60** Hz
año de construcción	**2017**		corriente a máxima carga (In)	**97** A
matrícula	**COM17279**		poder de interrupción (Icc)	**50** kA
			peso tablero eléctrico	**600** kg

OTROS DATOS

potencia nominal instalada	**Ref.=TW4+Q0.003** kW		corriente nominal de la carga mayor (Ia)	**42** A
grado de protección armarios eléctricos y consolas	**IP 41**			

IDENTIFICACIÓN EQUIPO

placa de identificación	**=TW4+C1**

DATOS DE PLACA [CEI EN 60204-1, IEC 60204-1]

sigla máquina	**=TW4**		tensión nominal	**230** V AC
tipo máquina	**TWIN 400 T.1**		número de las fases	**1**
N° esquema eléctrico	**=TW4+C1-103**		frecuencia (f)	**60** Hz
año de construcción	**2017**		corriente a máxima carga (In)	**10** A
matrícula	**COM17279**		poder de interrupción (Icc)	**-** kA
			peso tablero eléctrico	**180** kg

OTROS DATOS

potencia nominal instalada	**1,5** kW		corriente nominal de la carga mayor (Ia)	**3** A
grado de protección armarios eléctricos y consolas	**IP 55**			

COLOR DE LOS CONDUCTORES [EN 60204-1 CEI 44-5 10.2.2]

CÓDIGO DE IDENTIFICACIÓN DE LOS MATERIALES [IEC 750 CEI 3-34]

BLOQUEO	FINALIDAD	MARCAS DE PREFIJO	EJEMPLO
1	Código principal de identificación	=	=TW4
2	Código de ubicación del material	+	+Q0
3	Código de identificación del material	-	-X5
4	Código de identificación de las borneras	:	:3

NOMENCLATURA ADOPTADA PARA LOS COMPONENTES

NOMENCLATURA DE LOS CABLES

número página.número progresivo del cable (primer n° cable interno página: 10)

NOMENCLATURA DE LOS BORNES

-Xnombre de la bornera:número progresivo del borne (primer n° borne: 1)

NOMENCLATURA DE LOS COMPONENTES GENÉRICOS

-referencia del dispositivo.número de la página.número progresivo del componente

NOMENCLATURA DE LOS CABLES ENTRE TABLERO ELÉCTRICO Y BORDO MÁQUINA

código máquina, número tablero-Wnúmero del cable

NOMENCLATURA DE LOS CABLES ENTRE LOS TABLEROS ELÉCTRICOS

código máquina, número del tablero de origen, número del tablero de destinación-Wnúmero del cable

MARCAS DE USO COMÚN EN LA MÁQUINA [IEC 617-2 CEI 3-14]

Línea de rayas cortas : Utilizada para identificar el montaje en el adaptador	Línea, punto, línea: Utilizada en asociaciones funcionales, agrupamientos	Línea formada por una raya larga y dos breves intercaladas : Utilizada en agrupamientos secundarios, externos al tablero

LOS CIRCUITOS DE COLOR NARANJA
QUEDAN CON TENSIÓN TAMBIÉN DESPUÉS
DE LA ABERTURA DEL INTERRUPTOR
GENERAL

Las informaciones técnicas identificadas con el símbolo al lado,
están destinadas a ser utilizadas únicamente por el personal Fosber.
Dichas informaciones no siendo importantes al fin de la seguridad, están redactadas

únicamente en italiano, según cuanto previsto al punto 18.1
de la norma CEI EN 60204-1 (IEC 60204-1)

LAS PÁGINAS QUE TIENEN SÓLO LA LEYENDA
EN ÉSTE ESQUEMA SE TIENEN QUE CONSIDERAR
VACÍAS INTENCIONALMENTE

TWIN 400 T.1

=TW4+Q0

FOSBER S.p.A.
via Provinciale per Camaiore, 27/28 55060 Monsagrati (Lucca) - ITALIA
T. +39.0583.3891 - F. +39.0583.389205/385567
E-mail: info@fosber.it

TWIN 400 T.1
SEZIONE SCHEMA ELETTRICO
SECCIÓN ESQUEMA ELÉCTRICO

customer	**CORRUGADORA GUATEMA**	REL	**L.CENTI**	**28/06/17**	issued	**28/06/2017**
job nr.	**4607**	REV			proj. sect.	**=TW4+Q0**
serial nr.	**COM17279**	DEF			page	**1 of 110**

FOSBER S.p.A.
via Provinciale per Camaiore, 27/28 55060 Monsagrati (Lucca) - ITALIA
T. +39.0583.3891 - F. +39.0583.389205/385567
E-mail: info@fosber.it

TWIN 400 T.1

PAGINA LASCIATA VUOTA
PÁGINA DEJADA EN BLANCO

customer	**CORRUGADORA GUATEMA**	REL	**L.CENTI**	**28/06/17**	issued	**28/06/2017**
job nr.	**4607**	REV			proj. sect.	**=TW4+Q0**
serial nr.	**COM17279**	DEF			page	**2 of 110**

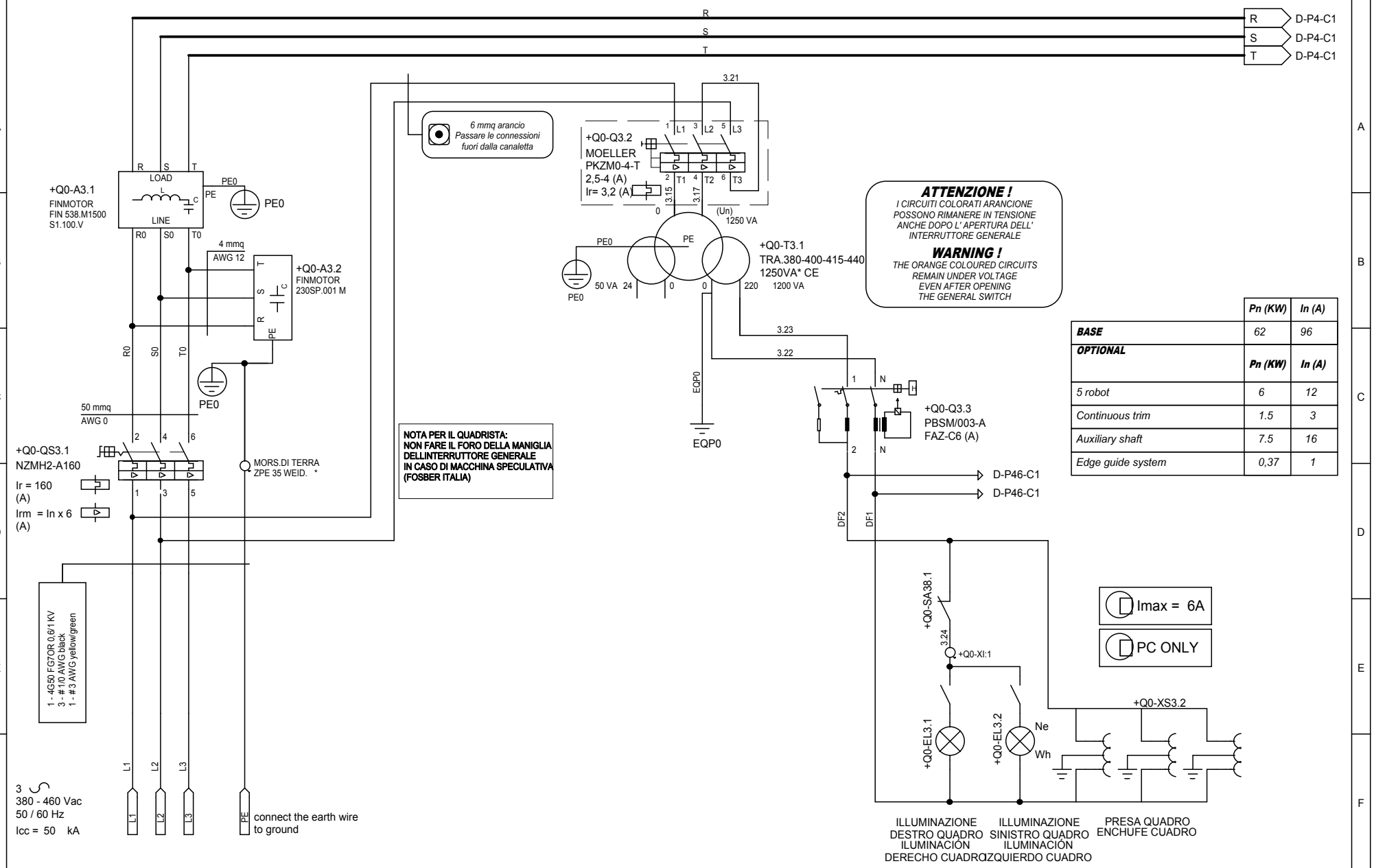

	Pn (KW)	In (A)
BASE	62	96
OPTIONAL	**Pn (KW)**	**In (A)**
5 robot	6	12
Continuous trim	1.5	3
Auxiliary shaft	7.5	16
Edge guide system	0,37	1

FOSBER S.p.A.
via Provinciale per Camaiore, 27/28 55060 Monsagrati (Lucca) - ITALIA
T. +39.0583.3891 - F. +39.0583.389205/385567
E-mail: info@fosber.it

TWIN 400 T.1
INGRESSO ALIMENTAZIONE DI LINEA
INGRESO ALIMENTACIÓN DI LINEA

customer	CORRUGADORA GUATEMA	REL	L.CENTI	28/06/17	issued	28/06/2017
job nr.	4607	REV			proj. sect.	=TW4+Q0
serial nr.	COM17279	DEF			page	3 of 110

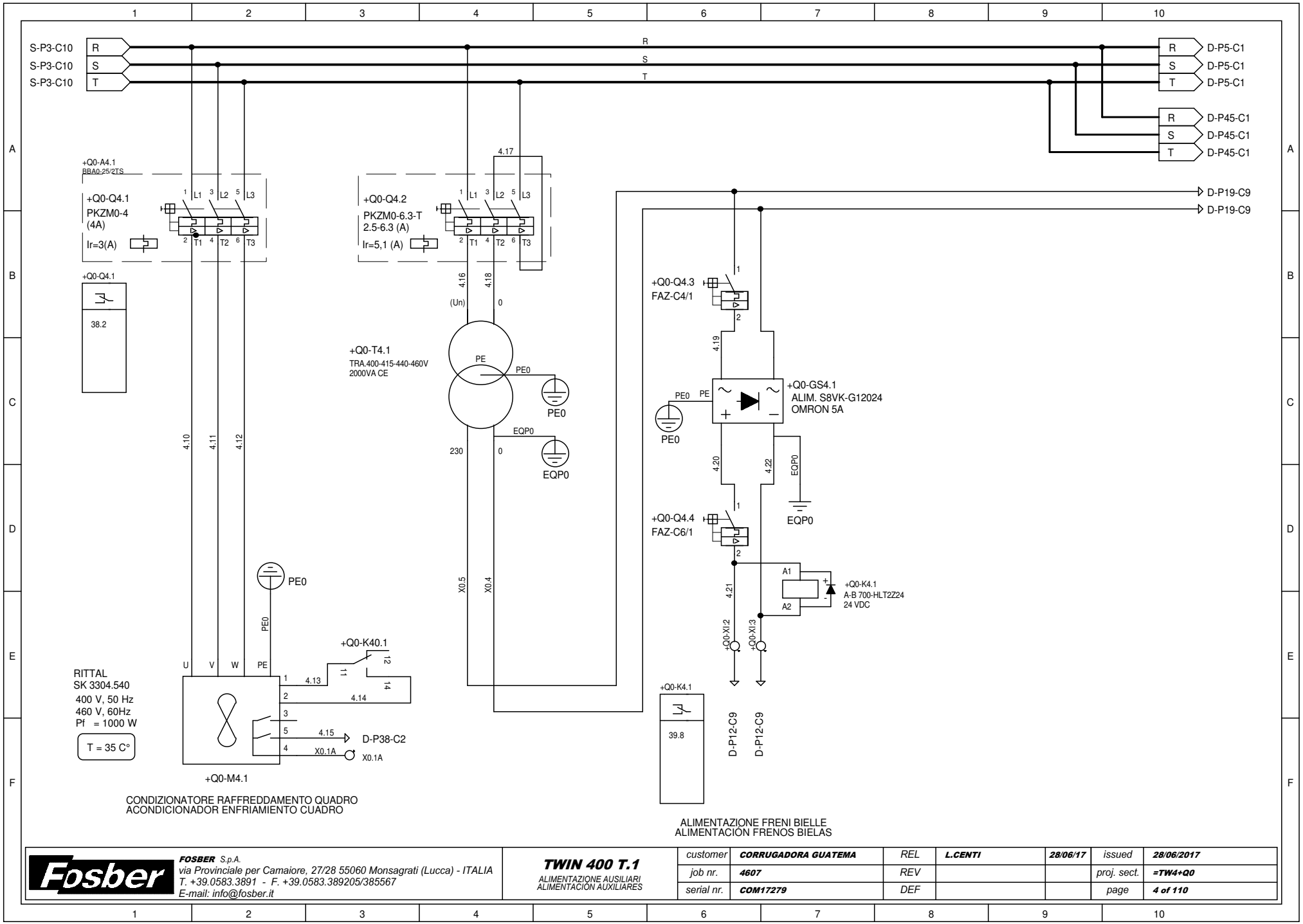

Fosber

FOSBER S.p.A.
via Provinciale per Camaiore, 27/28 55060 Monsagrati (Lucca) - ITALIA
T. +39.0583.3891 - F. +39.0583.389205/385567
E-mail: info@fosber.it

TWIN 400 T.1

ALIMENTAZIONE AUSILIARI
ALIMENTACIÓN AUXILIARES

customer	CORRUGADORA GUATEMA	REL	L.CENTI	28/06/17	issued	28/06/2017
job nr.	4607	REV			proj. sect.	=TW4+Q0
serial nr.	COM17279	DEF			page	4 of 110

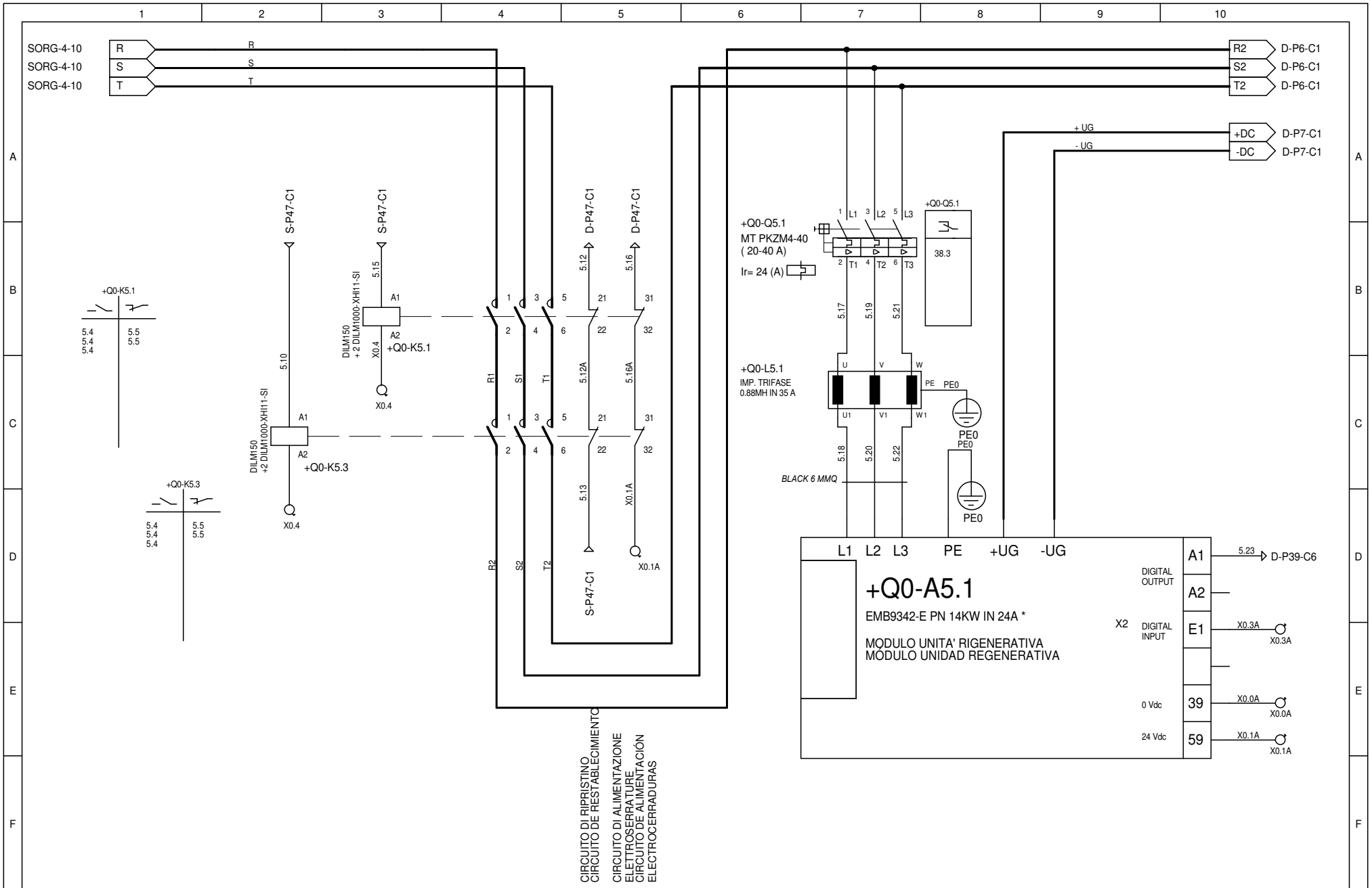

Fosber

FOSBER S.p.A.
via Provinciale per Camaiore, 27/28 55060 Monsagrati (Lucca) - ITALIA
T. +39.0583.3891 - F. +39.0583.389205/385567
E-mail: info@fosber.it

TWIN 400 T.1

CIRCUITI DI POTENZA E DC BUS
CIRCUITOS DE POTENCIA Y CC BUS

customer	**CORRUGADORA GUATEMA**	REL	**L.CENTI**	**28/06/17**	issued	**28/06/2017**
job nr.	**4607**	REV			proj. sect.	**=TW4+Q0**
serial nr.	**COM17279**	DEF			page	**5 of 110**

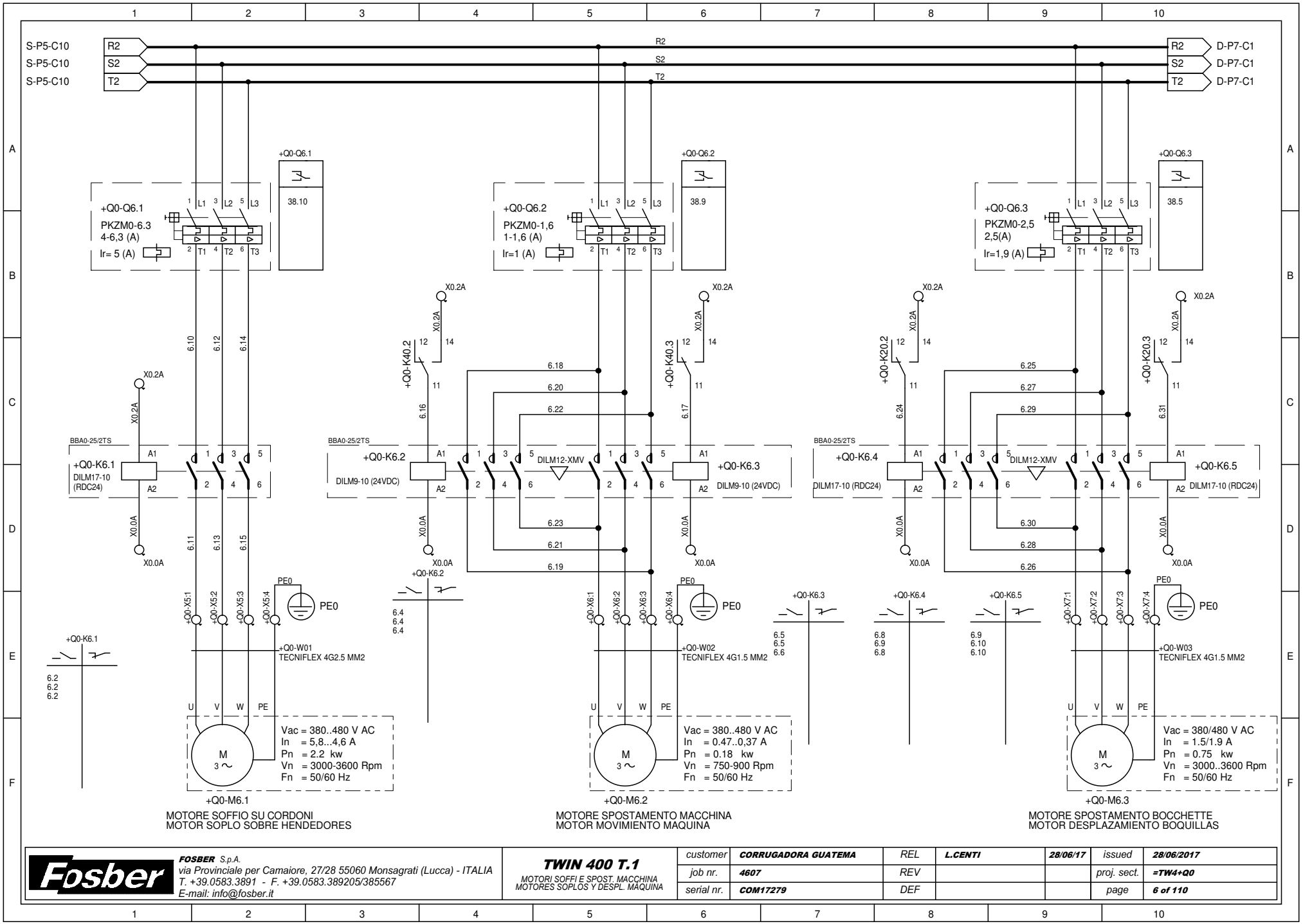

FOSBER S.p.A. via Provinciale per Camaiore, 27/28 55060 Monsagrati (Lucca) - ITALIA T. +39.0583.3891 - F. +39.0583.389205/385567 E-mail: info@fosber.it	**TWIN 400 T.1** MOTORI SOFFI E SPOST. MACCHINA MOTORES SOPLOS Y DESPL. MAQUINA	customer	CORRUGADORA GUATEMA	REL	L.CENTI	28/06/17	issued	28/06/2017
		job nr.	4607	REV			proj. sect.	=TW4+Q0
		serial nr.	COM17279	DEF			page	6 of 110

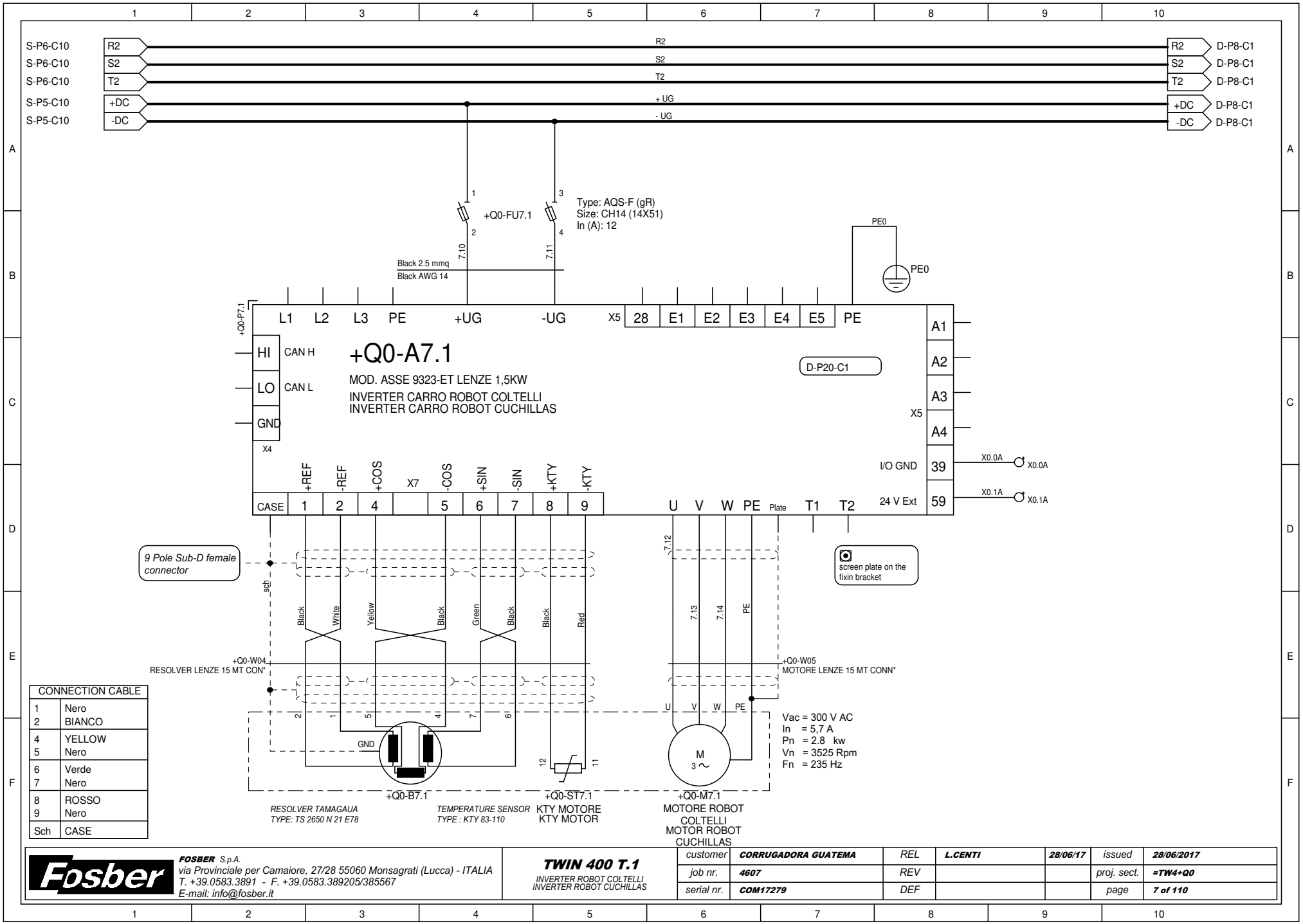

CONNECTION CABLE	
1 2	Nero BIANCO
4 5	YELLOW Nero
6 7	Verde Nero
8 9	ROSSO Nero
Sch	CASE

FOSBER S.p.A.
via Provinciale per Camaiore, 27/28 55060 Monsagrati (Lucca) - ITALIA
T. +39.0583.3891 - F. +39.0583.389205/385567
E-mail: info@fosber.it

TWIN 400 T.1
INVERTER ROBOT COLTELLI
INVERTER ROBOT CUCHILLAS

customer	CORRUGADORA GUATEMA	REL	L.CENTI	28/06/17	issued	28/06/2017
job nr.	4607	REV			proj. sect.	=TW4+Q0
serial nr.	COM17279	DEF			page	7 of 110

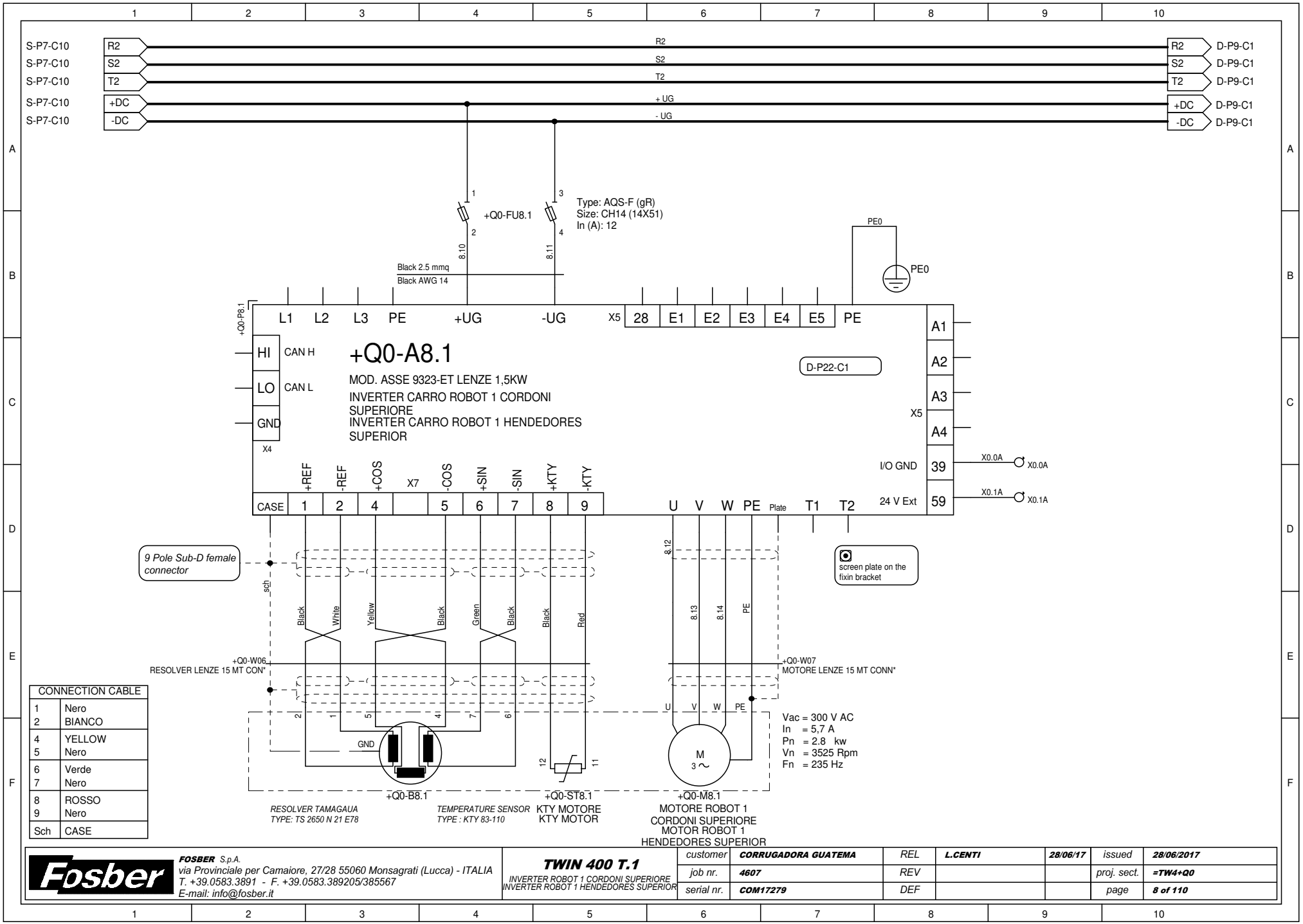

CONNECTION CABLE	
1 2	Nero BIANCO
4 5	YELLOW Nero
6 7	Verde Nero
8 9	ROSSO Nero
Sch	CASE

FOSBER S.p.A.
via Provinciale per Camaiore, 27/28 55060 Monsagrati (Lucca) - ITALIA
T. +39.0583.3891 - F. +39.0583.389205/385567
E-mail: info@fosber.it

TWIN 400 T.1
INVERTER ROBOT 1 CORDONI SUPERIORE
INVERTER ROBOT 1 HENDEDORES SUPERIOR

customer	CORRUGADORA GUATEMA	REL	L.CENTI	28/06/17	issued	28/06/2017
job nr.	4607	REV			proj. sect.	=TW4+Q0
serial nr.	COM17279	DEF			page	8 of 110

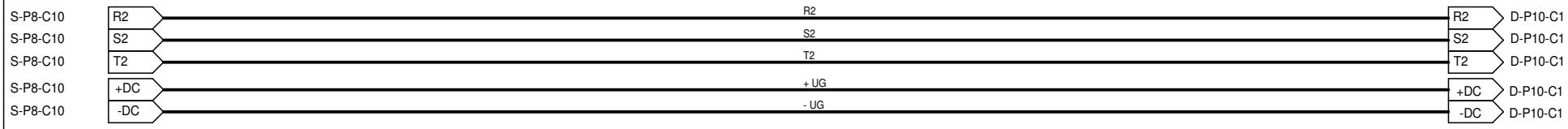

FOSBER S.p.A.
via Provinciale per Camaiore, 27/28 55060 Monsagrati (Lucca) - ITALIA
T. +39.0583.3891 - F. +39.0583.389205/385567
E-mail: info@fosber.it

TWIN 400 T.1
INVERTER ROBOT 2 CORDONI SUPERIORE
INVERTER ROBOT 2 HENDEDORES SUPERIOR

customer	CORRUGADORA GUATEMA	REL	L.CENTI	28/06/17	issued	28/06/2017
job nr.	4607	REV			proj. sect.	=TW4+Q0
serial nr.	COM17279	DEF			page	9 of 110

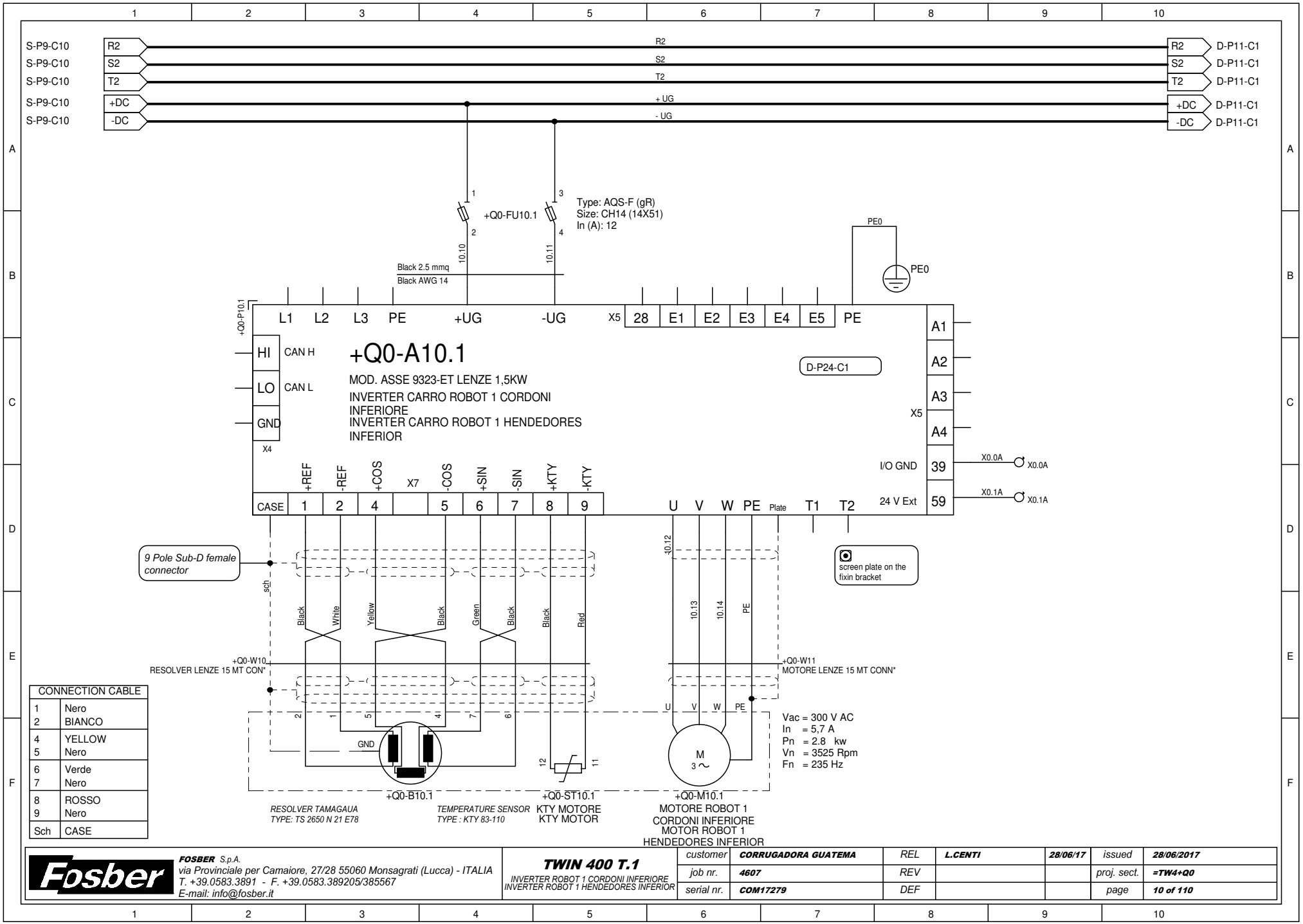

CONNECTION CABLE	
1 2	Nero BIANCO
4 5	YELLOW Nero
6 7	Verde Nero
8 9	ROSSO Nero
Sch	CASE

Fosber
FOSBER S.p.A.
via Provinciale per Camaiore, 27/28 55060 Monsagrati (Lucca) - ITALIA
T. +39.0583.3891 - F. +39.0583.389205/385567
E-mail: info@fosber.it

TWIN 400 T.1
INVERTER ROBOT 1 CORDONI INFERIORE
INVERTER ROBOT 1 HENDEDORES INFERIOR

customer	CORRUGADORA GUATEMA	REL	L.CENTI	28/06/17	issued	28/06/2017
job nr.	4607	REV			proj. sect.	=TW4+Q0
serial nr.	COM17279	DEF			page	10 of 110

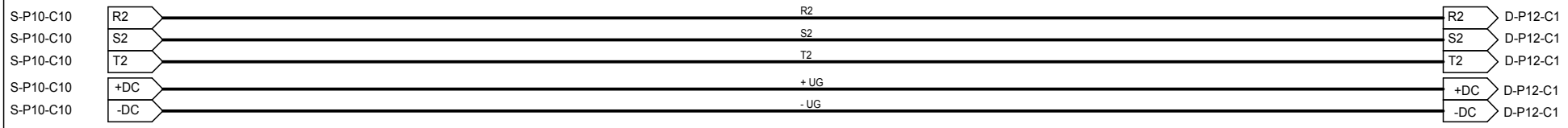

FOSBER S.p.A.
via Provinciale per Camaiore, 27/28 55060 Monsagrati (Lucca) - ITALIA
T. +39.0583.3891 - F. +39.0583.389205/385567
E-mail: info@fosber.it

TWIN 400 T.1
INVERTER ROBOT 2 CORDONI INFERIORE
INVERTER ROBOT 2 HENDEDORES INFERIOR

customer	CORRUGADORA GUATEMA	REL	L.CENTI	28/06/17	issued	28/06/2017
job nr.	4607	REV			proj. sect.	=TW4+Q0
serial nr.	COM17279	DEF			page	11 of 110

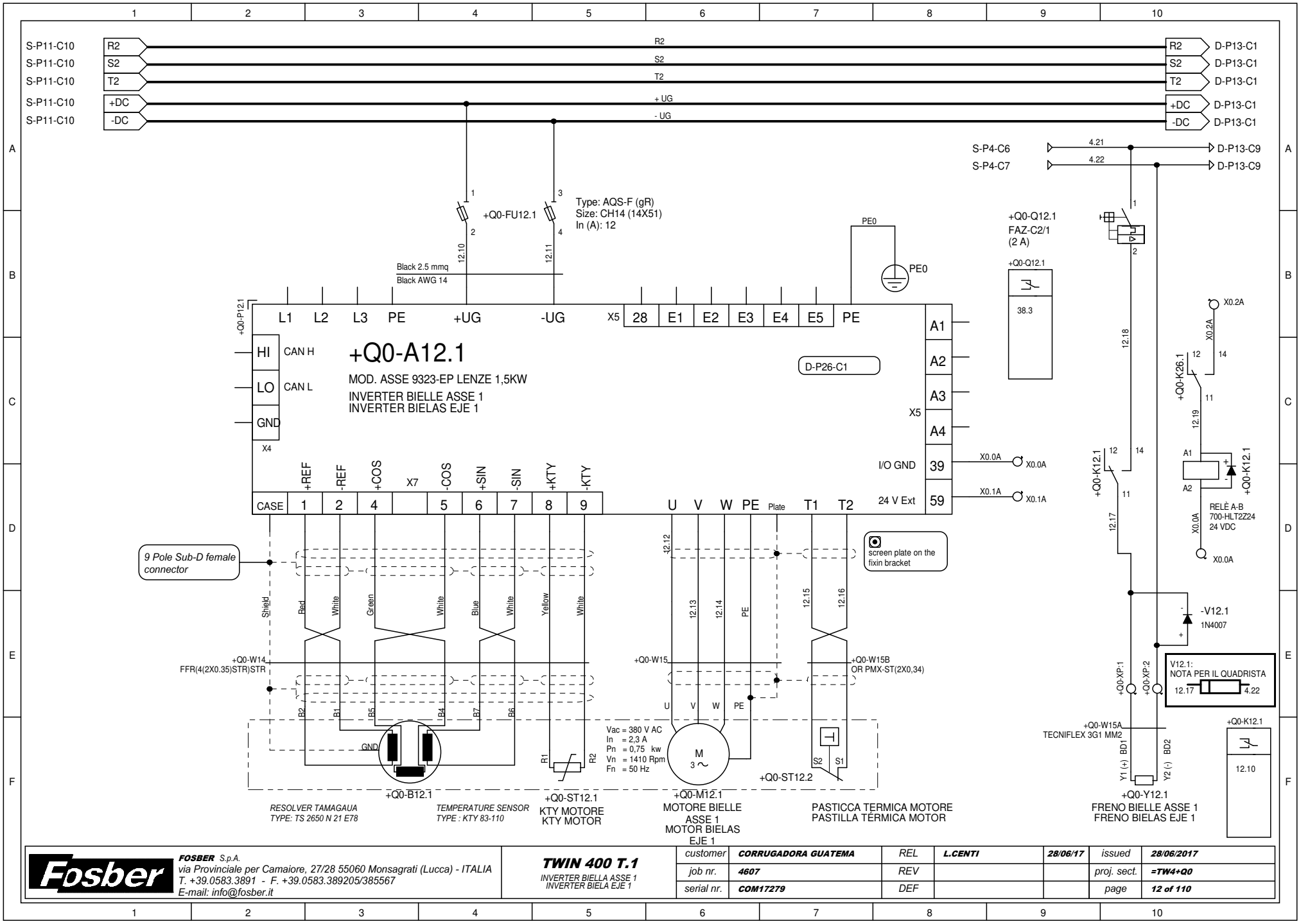

FOSBER S.p.A.
via Provinciale per Camaiore, 27/28 55060 Monsagrati (Lucca) - ITALIA
T. +39.0583.3891 - F. +39.0583.389205/385567
E-mail: info@fosber.it

TWIN 400 T.1
INVERTER BIELLA ASSE 1
INVERTER BIELA EJE 1

customer	CORRUGADORA GUATEMA	REL	L.CENTI	28/06/17	issued	28/06/2017
job nr.	4607	REV			proj. sect.	=TW4+Q0
serial nr.	COM17279	DEF			page	12 of 110

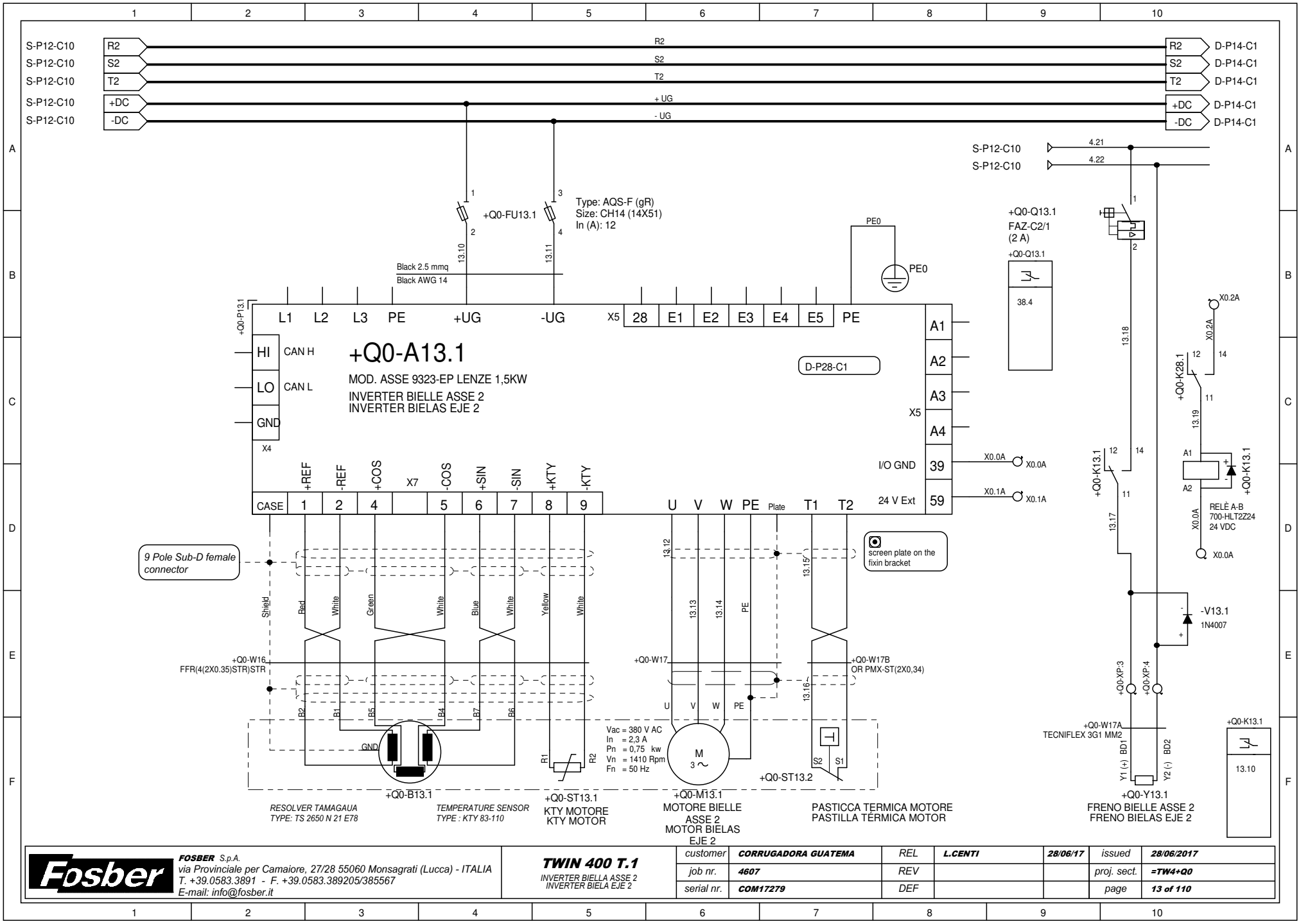
S-P12-C10 R2
S-P12-C10 S2
S-P12-C10 T2
S-P12-C10 +DC
S-P12-C10 -DC
R2 D-P14-C1
S2 D-P14-C1
T2 D-P14-C1
+DC D-P14-C1
-DC D-P14-C1
+ UG
- UG
S-P12-C10 4.21
S-P12-C10 4.22
+Q0-FU13.1
Type: AQS-F (gR)
Size: CH14 (14X51)
In (A): 12
Black 2.5 mmq
Black AWG 14
PE0
+Q0-Q13.1
FAZ-C2/1
(2 A)
38.4
+Q0-P13.1
L1 L2 L3 PE +UG -UG
X5 28 E1 E2 E3 E4 E5 PE
HI CAN H
LO CAN L
GND
X4
+Q0-A13.1
MOD. ASSE 9323-EP LENZE 1,5KW
INVERTER BIELLE ASSE 2
INVERTER BIELAS EJE 2
D-P28-C1
A1
A2
A3
A4
X5
I/O GND 39
24 V Ext 59
X0.0A
X0.1A
+REF -REF +COS X7 -COS +SIN -SIN +KTY -KTY
CASE 1 2 4 5 6 7 8 9
U V W PE Plate T1 T2
9 Pole Sub-D female connector
screen plate on the fixin bracket
Shield Red White Green White Blue White Yellow White
+Q0-W16
FFR(4(2X0.35)STR)STR
+Q0-W17
+Q0-W17B
OR PMX-ST(2X0,34)
B2 B1 B5 B4 B7 B6
GND
R1 R2
Vac = 380 V AC
In = 2,3 A
Pn = 0,75 kw
Vn = 1410 Rpm
Fn = 50 Hz
M 3~
S2 S1
+Q0-ST13.2
+Q0-B13.1
RESOLVER TAMAGAUA
TYPE: TS 2650 N 21 E78
TEMPERATURE SENSOR
TYPE : KTY 83-110
+Q0-ST13.1
KTY MOTORE
KTY MOTOR
+Q0-M13.1
MOTORE BIELLE ASSE 2
MOTOR BIELAS EJE 2
PASTICCA TERMICA MOTORE
PASTILLA TÉRMICA MOTOR
+Q0-K28.1
X0.2A
+Q0-K13.1
RELÈ A-B
700-HLT2Z24
24 VDC
-V13.1
1N4007
+Q0-XP-3
+Q0-XP-4
+Q0-W17A
TECNIFLEX 3G1 MM2
BD1 BD2
Y1 (+) Y2 (-)
+Q0-Y13.1
FRENO BIELLE ASSE 2
FRENO BIELAS EJE 2
13.10
Fosber
FOSBER S.p.A.
via Provinciale per Camaiore, 27/28 55060 Monsagrati (Lucca) - ITALIA
T. +39.0583.3891 - F. +39.0583.389205/385567
E-mail: info@fosber.it
TWIN 400 T.1
INVERTER BIELLA ASSE 2
INVERTER BIELA EJE 2
customer CORRUGADORA GUATEMA
job nr. 4607
serial nr. COM17279
REL L.CENTI 28/06/17
REV
DEF
issued 28/06/2017
proj. sect. =TW4+Q0
page 13 of 110

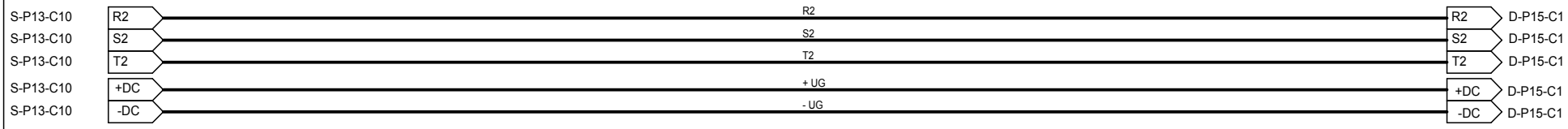

FOSBER S.p.A.
via Provinciale per Camaiore, 27/28 55060 Monsagrati (Lucca) - ITALIA
T. +39.0583.3891 - F. +39.0583.389205/385567
E-mail: info@fosber.it

TWIN 400 T.1
INVERTER BIELLA ASSE AUSILIARIO
INVERTER BIELA EJE AUXILIAR

customer	CORRUGADORA GUATEMA	REL	L.CENTI	28/06/17	issued	28/06/2017
job nr.	4607	REV			proj. sect.	=TW4+Q0
serial nr.	COM17279	DEF			page	14 of 110

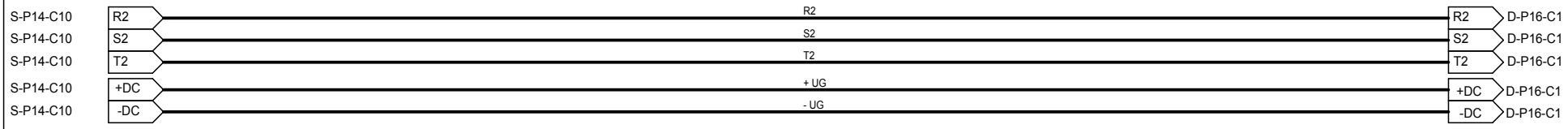

FOSBER S.p.A.
via Provinciale per Camaiore, 27/28 55060 Monsagrati (Lucca) - ITALIA
T. +39.0583.3891 - F. +39.0583.389205/385567
E-mail: info@fosber.it

TWIN 400 T.1
INVERTER BOCCHETTE CONTINUOS TRIM
INVERTER BOQUILLAS RECORTE CONTINUO

customer	CORRUGADORA GUATEMA	REL	L.CENTI	28/06/17	issued	28/06/2017
job nr.	4607	REV			proj. sect.	=TW4+Q0
serial nr.	COM17279	DEF			page	15 of 110

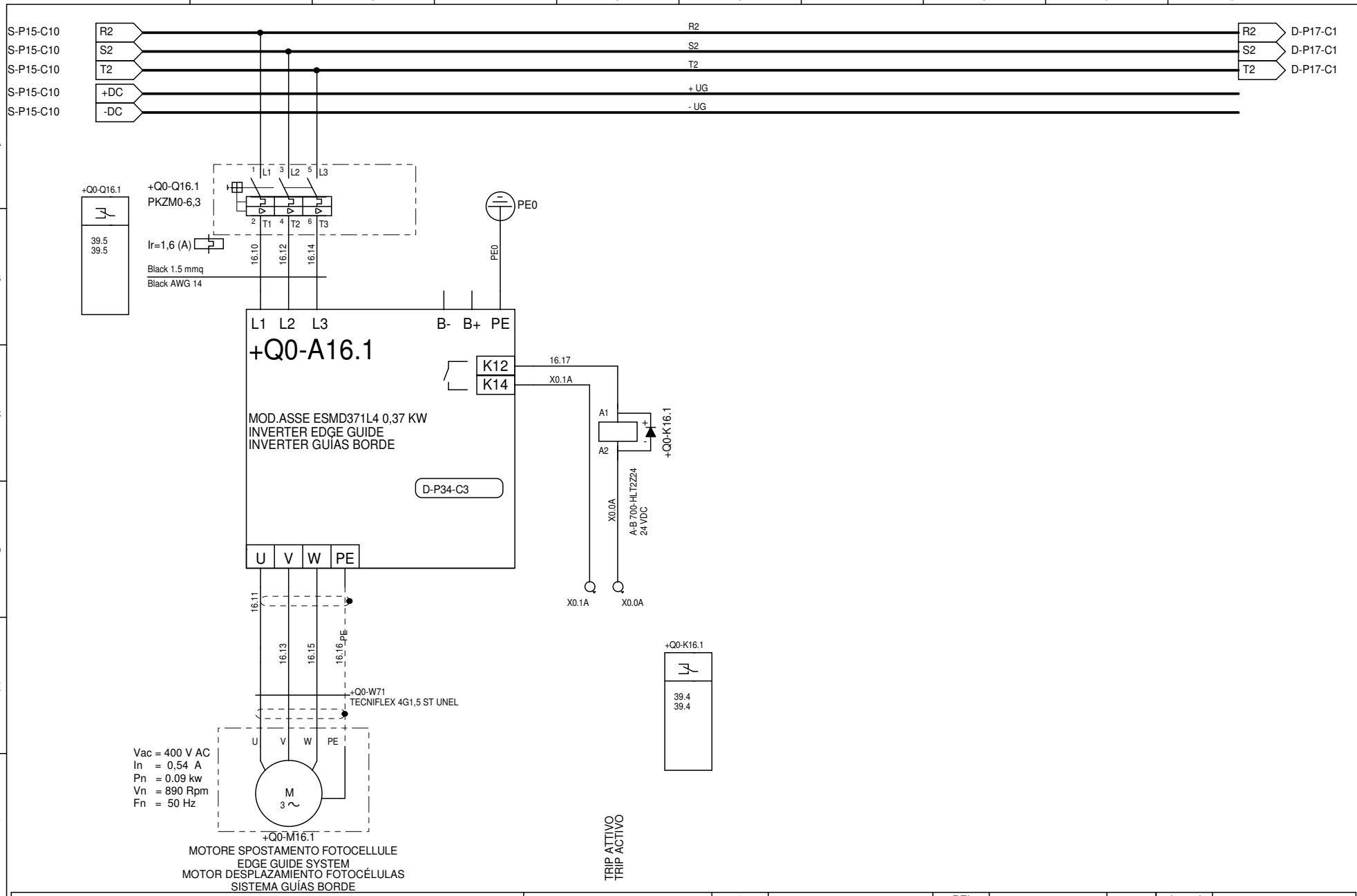

Fosber	FOSBER S.p.A. via Provinciale per Camaiore, 27/28 55060 Monsagrati (Lucca) - ITALIA T. +39.0583.3891 - F. +39.0583.389205/385567 E-mail: info@fosber.it	TWIN 400 T.1 INVERTER EDGE GUIDE INVERTER GUÍAS BORDE	customer	CORRUGADORA GUATEMA	REL	L.CENTI	28/06/17	issued	28/06/2017
			job nr.	4607	REV			proj. sect.	=TW4+Q0
			serial nr.	COM17279	DEF			page	16 of 110

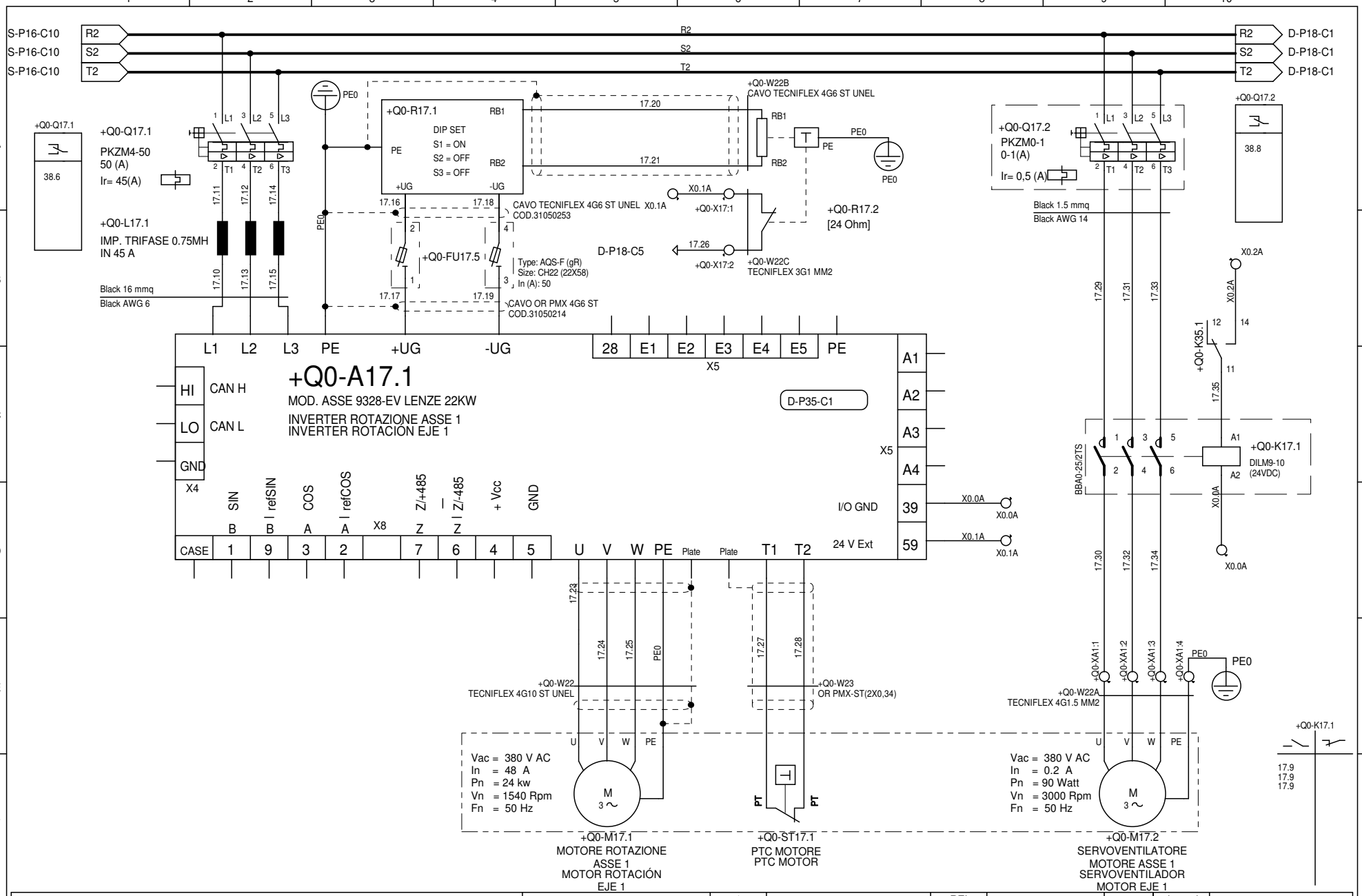

FOSBER S.p.A.
via Provinciale per Camaiore, 27/28 55060 Monsagrati (Lucca) - ITALIA
T. +39.0583.3891 - F. +39.0583.389205/385567
E-mail: info@fosber.it

TWIN 400 T.1
INVERTER ROTAZIONE ASSE 1
INVERTER ROTACIÓN EJE 1

customer	CORRUGADORA GUATEMA	REL	L.CENTI	28/06/17	issued	28/06/2017
job nr.	4607	REV			proj. sect.	=TW4+Q0
serial nr.	COM17279	DEF			page	17 of 110

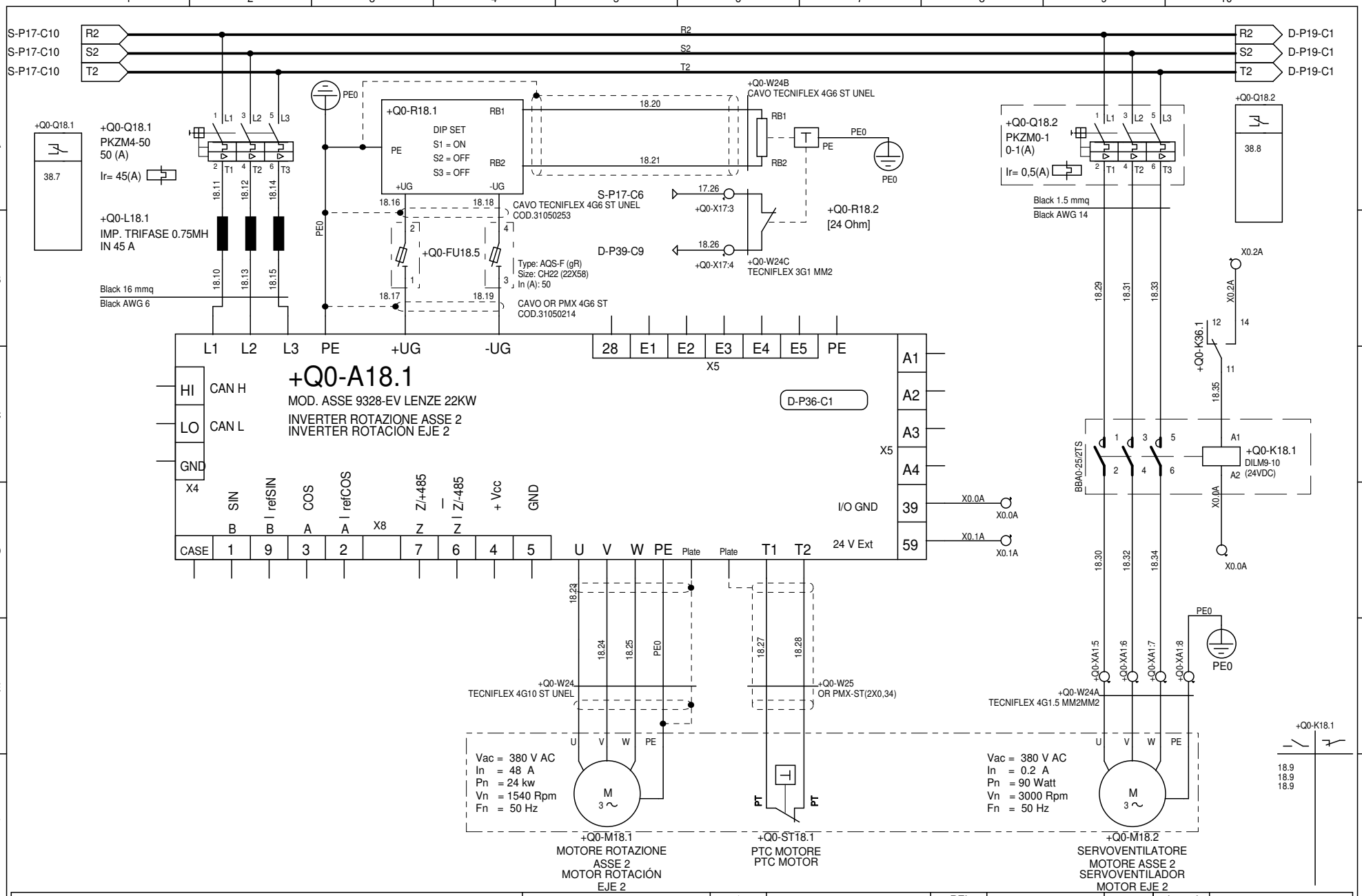

Fosber
FOSBER S.p.A.
via Provinciale per Camaiore, 27/28 55060 Monsagrati (Lucca) - ITALIA
T. +39.0583.3891 - F. +39.0583.389205/385567
E-mail: info@fosber.it

TWIN 400 T.1
INVERTER ROTAZIONE ASSE 2
INVERTER ROTACIÓN EJE 2

customer	CORRUGADORA GUATEMA	REL	L.CENTI	28/06/17	issued	28/06/2017
job nr.	4607	REV			proj. sect.	=TW4+Q0
serial nr.	COM17279	DEF			page	18 of 110

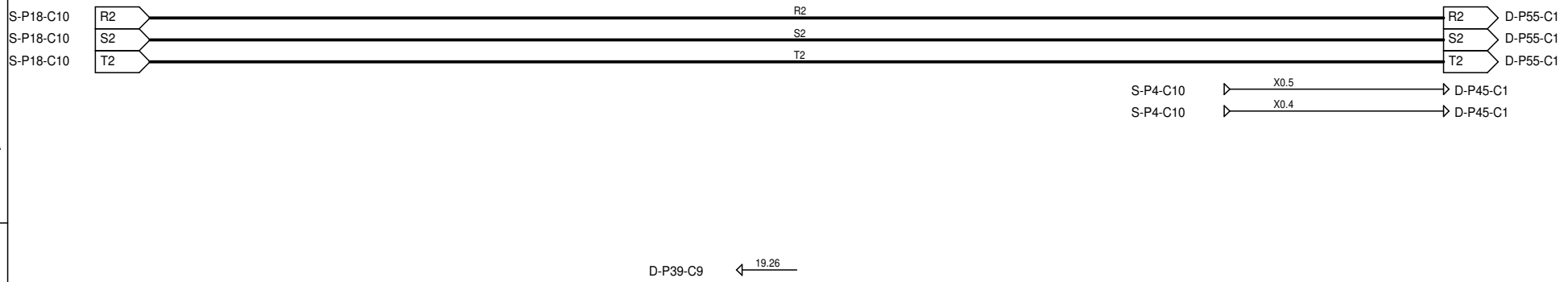

FOSBER S.p.A.
via Provinciale per Camaiore, 27/28 55060 Monsagrati (Lucca) - ITALIA
T. +39.0583.3891 - F. +39.0583.389205/385567
E-mail: info@fosber.it

TWIN 400 T.1
INVERTER ROTAZIONE ASSE AUSILIARIO
INVERTER ROTACIÓN EJE AUXILIAR

customer	CORRUGADORA GUATEMA	REL	L.CENTI	28/06/17	issued	28/06/2017
job nr.	4607	REV			proj. sect.	=TW4+Q0
serial nr.	COM17279	DEF			page	19 of 110

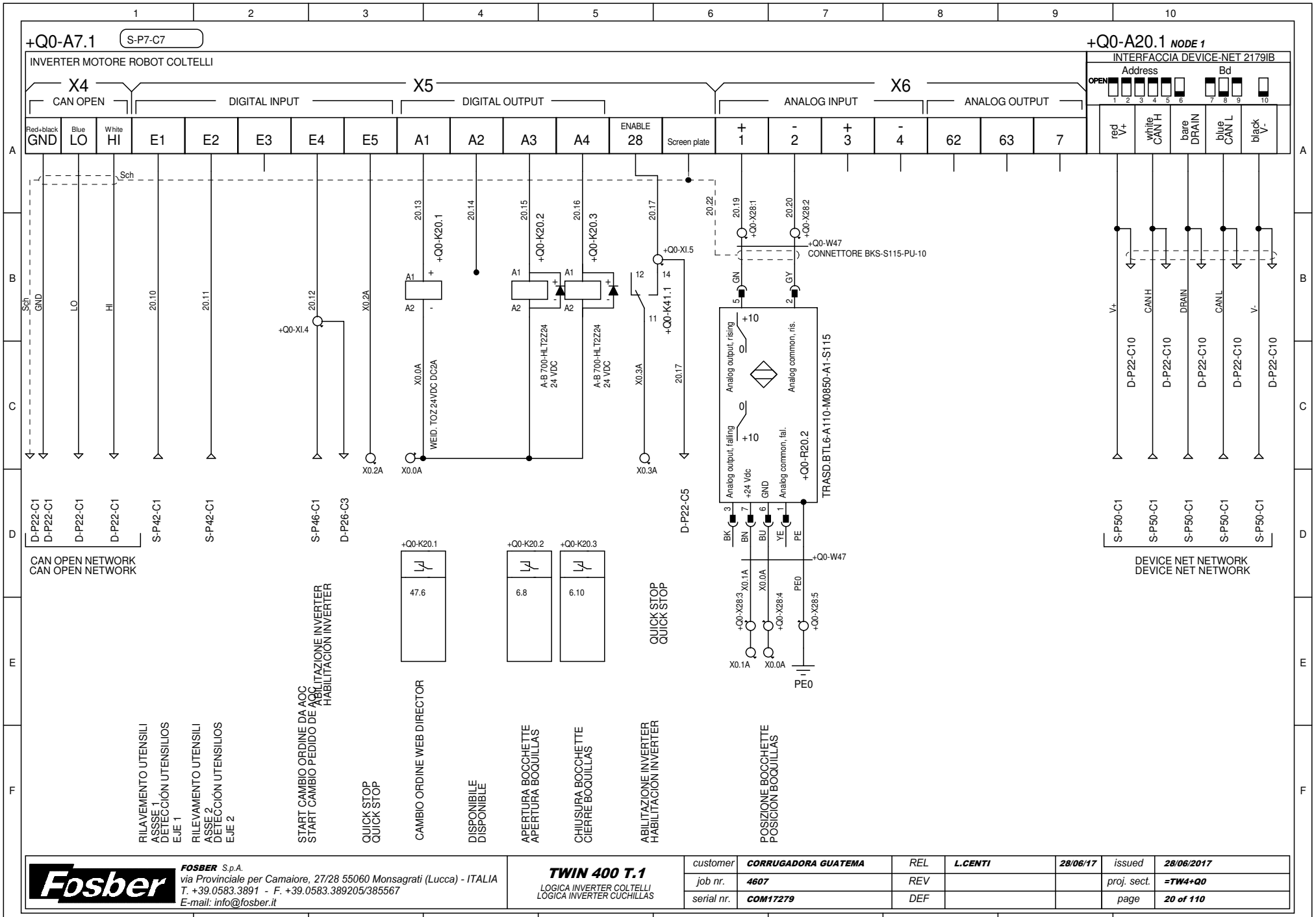

Fosber	**FOSBER** S.p.A. via Provinciale per Camaiore, 27/28 55060 Monsagrati (Lucca) - ITALIA T. +39.0583.3891 - F. +39.0583.389205/385567 E-mail: info@fosber.it	**TWIN 400 T.1** LOGICA INVERTER COLTELLI LÓGICA INVERTER CUCHILLAS	customer	CORRUGADORA GUATEMA	REL	L.CENTI	28/06/17	issued	28/06/2017
			job nr.	4607	REV			proj. sect.	=TW4+Q0
			serial nr.	COM17279	DEF			page	20 of 110

+Q0-A7.1

INVERTER MOTORE ROBOT COLTELLI
INVERTER MOTOR ROBOT CUCHILLAS

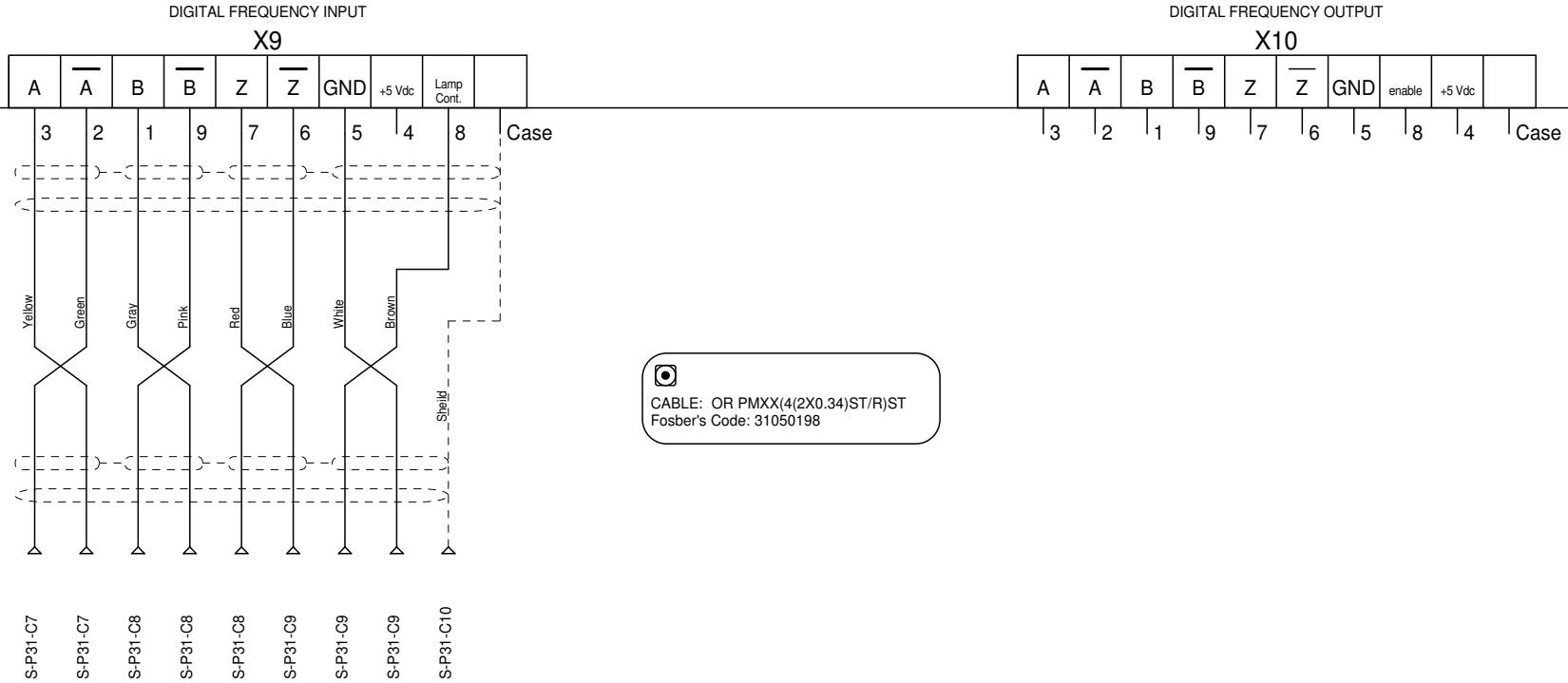

CABLE: OR PMXX(4(2X0.34)ST/R)ST
Fosber's Code: 31050198

FOSBER S.p.A.
via Provinciale per Camaiore, 27/28 55060 Monsagrati (Lucca) - ITALIA
T. +39.0583.3891 - F. +39.0583.389205/385567
E-mail: info@fosber.it

TWIN 400 T.1
X9-X10 INVERTER ROBOT COLTELLI

customer	**CORRUGADORA GUATEMA**	REL	**L.CENTI**	**28/06/17**	issued	**28/06/2017**
job nr.	**4607**	REV			proj. sect.	**=TW4+Q0**
serial nr.	**COM17279**	DEF			page	**21 of 110**

+Q0-A8.1 S-P8-C7

INVERTER MOTORE ROBOT 1 CORDONI ASSE SUPERIORE

+Q0-A22.1 *NODE 2*

INTERFACCIA DEVICE-NET 2179IB

Address Bd

OPEN 1 2 3 4 5 6 7 8 9 10

X4 — CAN OPEN

X5 — DIGITAL INPUT / DIGITAL OUTPUT

X6 — ANALOG INPUT / ANALOG OUTPUT

Red+black	Blue	White																					
GND	LO	HI	E1	E2	E3	E4	E5	A1	A2	A3	A4	ENABLE 28	Screen plate	+ 1	- 2	+ 3	- 4	62	63	7	red V+	white CAN H	bare DRAIN	blue CAN L	black V-

Sch GND D-P24-C1 S-P20-C1 S-P20-C1

LO D-P24-C1 S-P20-C1

HI D-P24-C1 S-P20-C1

Sch D-P24-C1

X0.2A X0.2A QUICK STOP QUICK STOP

20.17 S-P20-C6 ABILITAZIONE INVERTER HABILITACION INVERTER

D-P24-C5

CAN OPEN NETWORK
CAN OPEN NETWORK

V+ D-P24-C10 S-P20-C10

CAN H D-P24-C10 S-P20-C10

DRAIN D-P24-C10 S-P20-C10

CAN L D-P24-C10 S-P20-C10

V- D-P24-C10 S-P20-C10

DEVICE NET NETWORK
DEVICE NET NETWORK

Fosber

FOSBER S.p.A.
via Provinciale per Camaiore, 27/28 55060 Monsagrati (Lucca) - ITALIA
T. +39.0583.3891 - F. +39.0583.389205/385567
E-mail: info@fosber.it

TWIN 400 T.1
INVERTER CORDONI 1 ASSE SUP.
INVERTER HENDEDORES 1 EJE SUP.

customer	**CORRUGADORA GUATEMA**	REL	**L.CENTI**	**28/06/17**	issued	**28/06/2017**
job nr.	**4607**	REV			proj. sect.	**=TW4+Q0**
serial nr.	**COM17279**	DEF			page	**22 of 110**

FOSBER S.p.A.
via Provinciale per Camaiore, 27/28 55060 Monsagrati (Lucca) - ITALIA
T. +39.0583.3891 - F. +39.0583.389205/385567
E-mail: info@fosber.it

TWIN 400 T.1
INVERTER CORDONI 2 ASSE SUP.
INVERTER HENDEDORES 2 EJE SUP.

customer	**CORRUGADORA GUATEMA**	REL	**L.CENTI**	**28/06/17**	issued	**28/06/2017**
job nr.	**4607**	REV			proj. sect.	**=TW4+Q0**
serial nr.	**COM17279**	DEF			page	**23 of 110**

+Q0-A10.1 S-P10-C7

INVERTER MOTORE ROBOT 1 CORDONI ASSE INFERIORE

+Q0-A24.1 *NODE 4*

INTERFACCIA DEVICE-NET 2179IB

Address Bd

OPEN 1 2 3 4 5 6 7 8 9 10

X4			X5										X6						
CAN OPEN			DIGITAL INPUT					DIGITAL OUTPUT					ANALOG INPUT				ANALOG OUTPUT		
Red+black GND	Blue LO	White HI	E1	E2	E3	E4	E5	A1	A2	A3	A4	ENABLE 28	Screen plate	+ 1	- 2	+ 3	- 4	62	63	7

red V+	white CAN H	bare DRAIN	blue CAN L	black V-

Sch GND D-P26-C1 S-P22-C1

Sch LO D-P26-C1 S-P22-C1

Sch HI D-P26-C1 S-P22-C1

Sch D-P26-C1 S-P22-C1

CAN OPEN NETWORK
CAN OPEN NETWORK

X0.2A X0.2A QUICK STOP QUICK STOP

20.17 S-P22-C6 ABILITAZIONE INVERTER HABILITACION INVERTER

V+ D-P26-C10 S-P22-C10

CAN H D-P26-C10 S-P22-C10

DRAIN D-P26-C10 S-P22-C10

CAN L D-P26-C10 S-P22-C10

V- D-P26-C10 S-P22-C10

DEVICE NET NETWORK
DEVICE NET NETWORK

Fosber

FOSBER S.p.A.
via Provinciale per Camaiore, 27/28 55060 Monsagrati (Lucca) - ITALIA
T. +39.0583.3891 - F. +39.0583.389205/385567
E-mail: info@fosber.it

TWIN 400 T.1
INVERTER CORDONI 1 ASSE INF.
INVERTER HENDEDORES 1 EJE INF.

customer	**CORRUGADORA GUATEMA**	REL	**L.CENTI**	**28/06/17**	issued	**28/06/2017**
job nr.	**4607**	REV			proj. sect.	**=TW4+Q0**
serial nr.	**COM17279**	DEF			page	**24 of 110**

FOSBER S.p.A.
via Provinciale per Camaiore, 27/28 55060 Monsagrati (Lucca) - ITALIA
T. +39.0583.3891 - F. +39.0583.389205/385567
E-mail: info@fosber.it

TWIN 400 T.1
INVERTER CORDONI 2 ASSE INF.
INVERTER HENDEDORES 2 EJE INF.

customer	**CORRUGADORA GUATEMA**	REL	**L.CENTI**	**28/06/17**	issued	**28/06/2017**
job nr.	**4607**	REV			proj. sect.	**=TW4+Q0**
serial nr.	**COM17279**	DEF			page	**25 of 110**

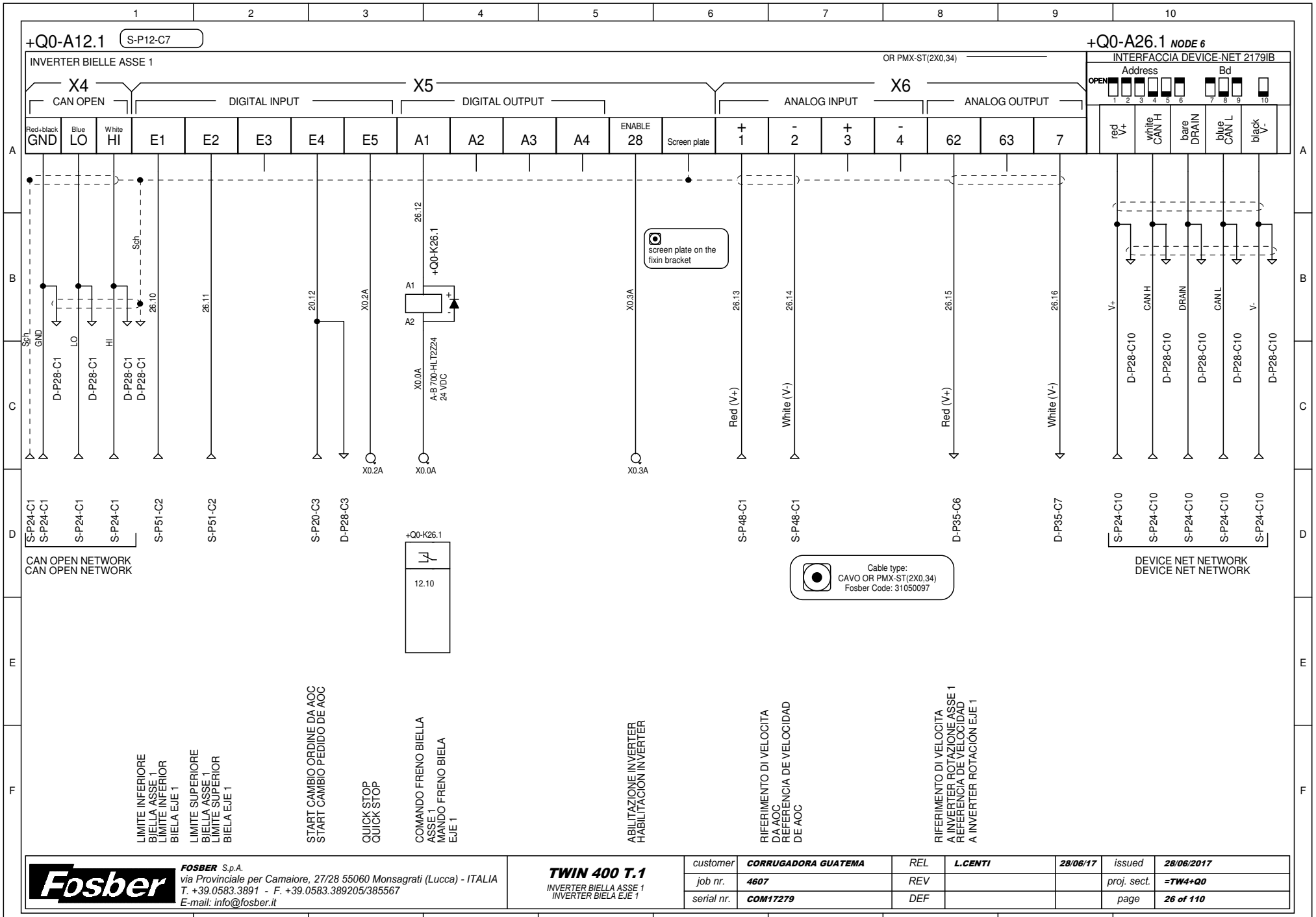
+Q0-A12.1
S-P12-C7
INVERTER BIELLE ASSE 1
+Q0-A26.1 NODE 6
INTERFACCIA DEVICE-NET 2179IB
OR PMX-ST(2X0,34)
X4
CAN OPEN
X5
DIGITAL INPUT
DIGITAL OUTPUT
X6
ANALOG INPUT
ANALOG OUTPUT
Address
Bd
OPEN
Red+black GND
Blue LO
White HI
E1
E2
E3
E4
E5
A1
A2
A3
A4
ENABLE 28
Screen plate
+ 1
- 2
+ 3
- 4
62
63
7
red V+
white CAN H
bare DRAIN
blue CAN L
black V-
screen plate on the fixin bracket
+Q0-K26.1
A-B 700-HLT2Z24 24 VDC
Red (V+)
White (V-)
D-P28-C1
D-P28-C10
S-P24-C1
S-P51-C2
S-P20-C3
D-P28-C3
S-P48-C1
D-P35-C6
D-P35-C7
S-P24-C10
CAN OPEN NETWORK
CAN OPEN NETWORK
DEVICE NET NETWORK
DEVICE NET NETWORK
Cable type:
CAVO OR PMX-ST(2X0,34)
Fosber Code: 31050097
12.10
LIMITE INFERIORE BIELLA ASSE 1
LIMITE INFERIOR BIELA EJE 1
LIMITE SUPERIORE BIELLA ASSE 1
LIMITE SUPERIOR BIELA EJE 1
START CAMBIO ORDINE DA AOC
START CAMBIO PEDIDO DE AOC
QUICK STOP
QUICK STOP
COMANDO FRENO BIELLA ASSE 1
MANDO FRENO BIELA EJE 1
ABILITAZIONE INVERTER
HABILITACIÓN INVERTER
RIFERIMENTO DI VELOCITA DA AOC
REFERENCIA DE VELOCIDAD DE AOC
RIFERIMENTO DI VELOCITA A INVERTER ROTAZIONE ASSE 1
REFERENCIA DE VELOCIDAD A INVERTER ROTACIÓN EJE 1
Fosber
FOSBER S.p.A.
via Provinciale per Camaiore, 27/28 55060 Monsagrati (Lucca) - ITALIA
T. +39.0583.3891 - F. +39.0583.389205/385567
E-mail: info@fosber.it
TWIN 400 T.1
INVERTER BIELLA ASSE 1
INVERTER BIELA EJE 1
customer CORRUGADORA GUATEMA
job nr. 4607
serial nr. COM17279
REL L.CENTI 28/06/17
REV
DEF
issued 28/06/2017
proj. sect. =TW4+Q0
page 26 of 110

+Q0-A12.1

INVERTER MOTORE BIELLE ASSE 1
INVERTER MOTOR BIELAS EJE 1

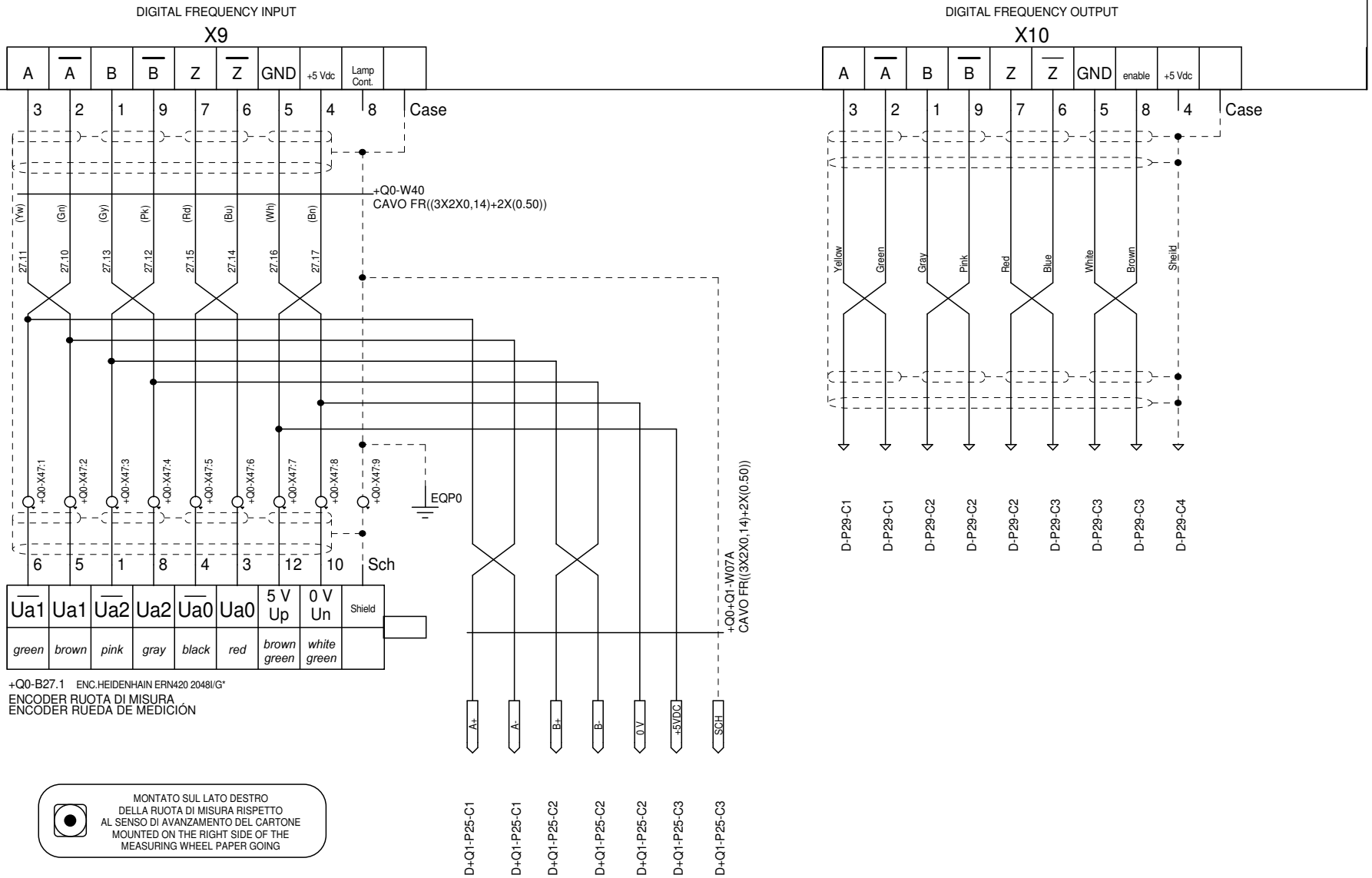

Fosber

FOSBER S.p.A.
via Provinciale per Camaiore, 27/28 55060 Monsagrati (Lucca) - ITALIA
T. +39.0583.3891 - F. +39.0583.389205/385567
E-mail: info@fosber.it

TWIN 400 T.1
X9-X10 INVERTER BIELLA ASSE 1
X9-X10 INVERTER BIELA EJE 1

customer	CORRUGADORA GUATEMA	REL	L.CENTI	28/06/17	issued	28/06/2017
job nr.	4607	REV			proj. sect.	=TW4+Q0
serial nr.	COM17279	DEF			page	27 of 110

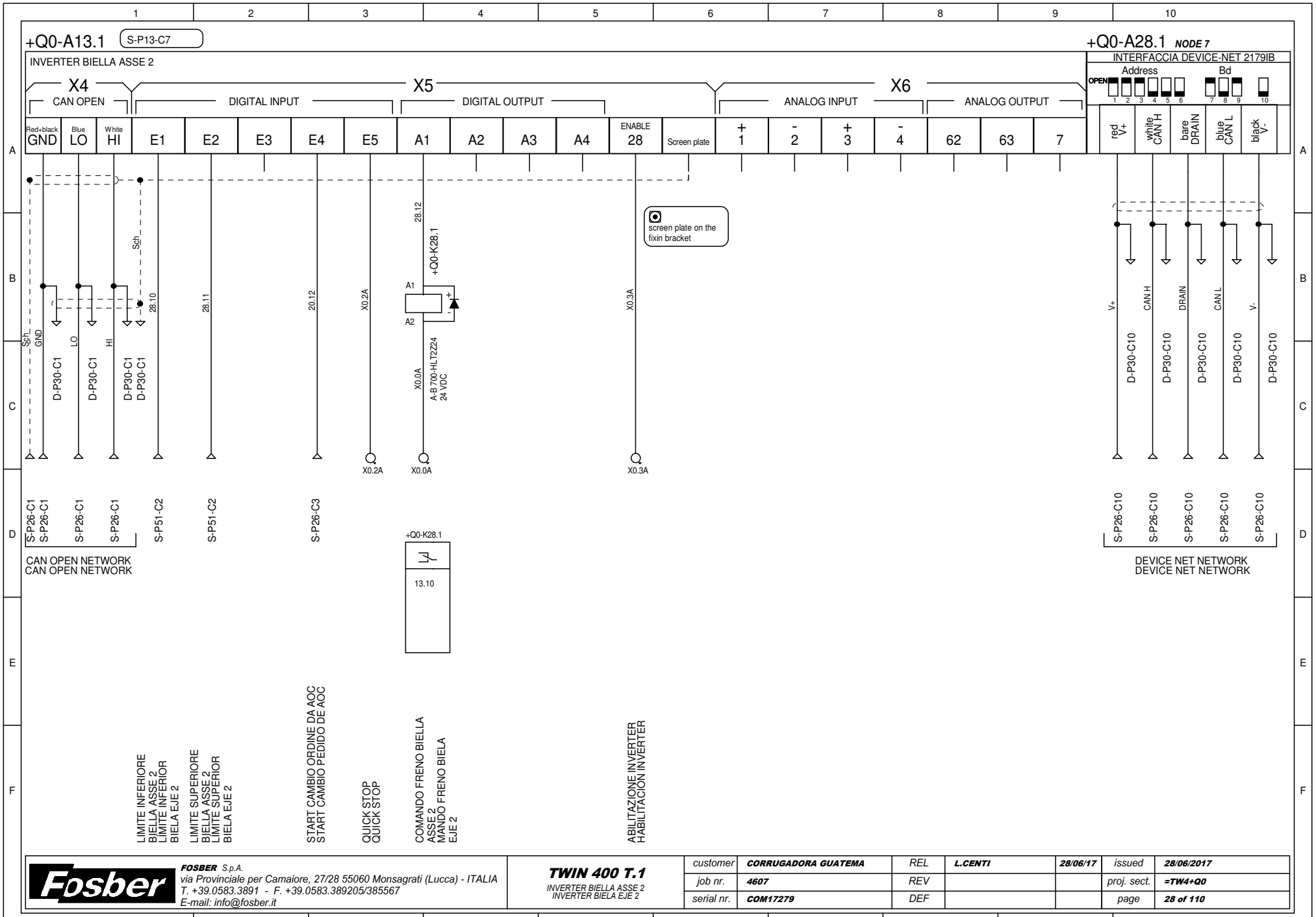

Fosber
FOSBER S.p.A.
via Provinciale per Camaiore, 27/28 55060 Monsagrati (Lucca) - ITALIA
T. +39.0583.3891 - F. +39.0583.389205/385567
E-mail: info@fosber.it

TWIN 400 T.1
INVERTER BIELLA ASSE 2
INVERTER BIELA EJE 2

customer	CORRUGADORA GUATEMA	REL	L.CENTI	28/06/17	issued	28/06/2017
job nr.	4607	REV			proj. sect.	=TW4+Q0
serial nr.	COM17279	DEF			page	28 of 110

+Q0-A13.1

INVERTER MOTORE BIELLE ASSE 2
INVERTER MOTOR BIELAS EJE 2

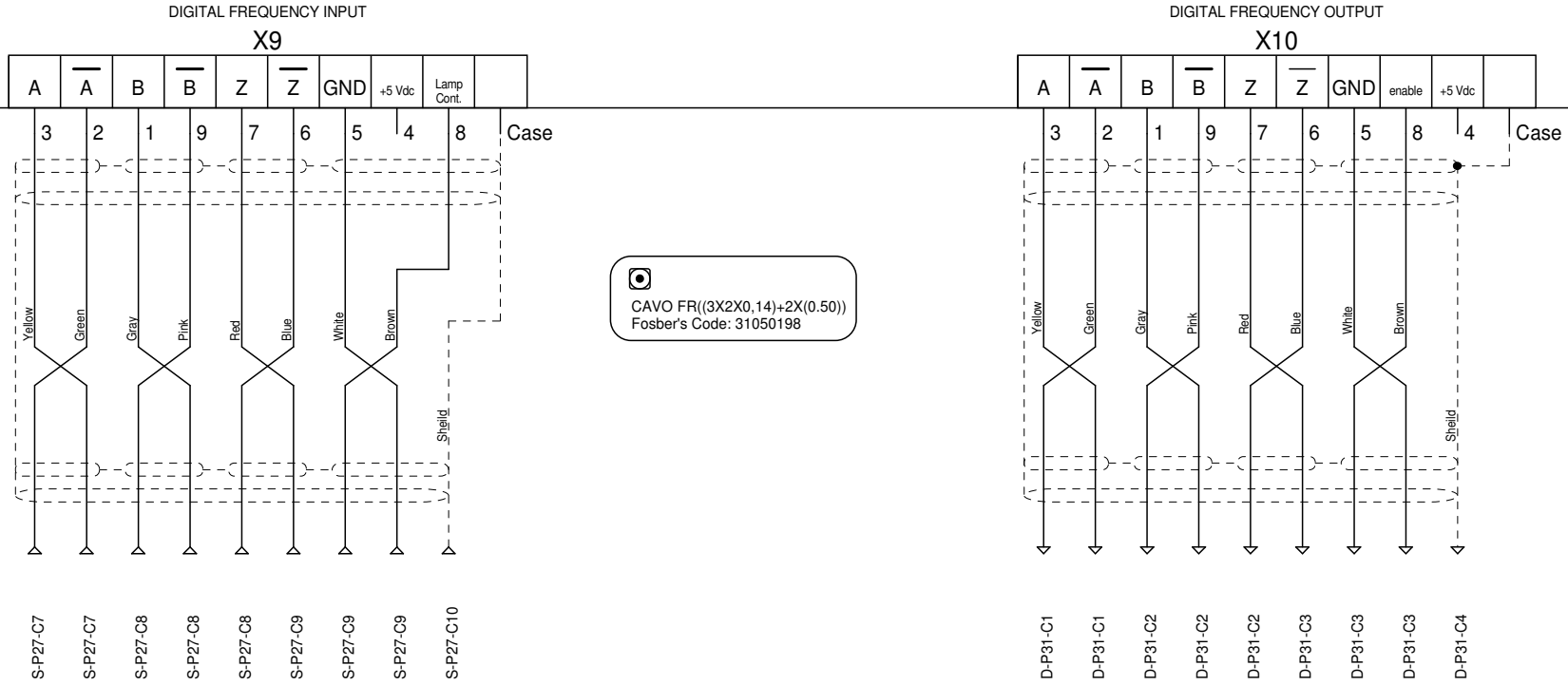

Fosber

FOSBER S.p.A.
via Provinciale per Camaiore, 27/28 55060 Monsagrati (Lucca) - ITALIA
T. +39.0583.3891 - F. +39.0583.389205/385567
E-mail: info@fosber.it

TWIN 400 T.1
X9-X10 INVERTER BIELLA ASSE 2
X9-X10 INVERTER BIELA EJE 2

customer	CORRUGADORA GUATEMA	REL	L.CENTI	28/06/17	issued	28/06/2017
job nr.	4607	REV			proj. sect.	=TW4+Q0
serial nr.	COM17279	DEF			page	29 of 110

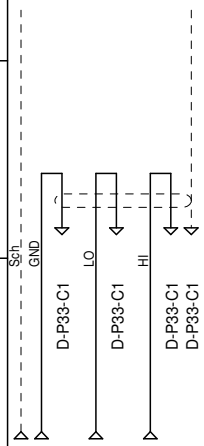

CAN OPEN NETWORK
CAN OPEN NETWORK

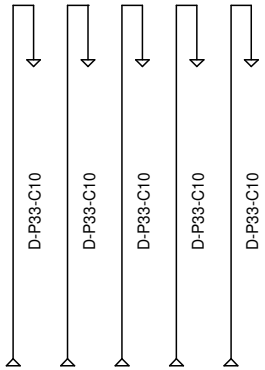

DEVICE NET NETWORK
DEVICE NET NETWORK

FOSBER S.p.A.
via Provinciale per Camaiore, 27/28 55060 Monsagrati (Lucca) - ITALIA
T. +39.0583.3891 - F. +39.0583.389205/385567
E-mail: info@fosber.it

TWIN 400 T.1
INVERTER BIELLA ASSE AUX
INVERTER BIELA EJE AUX

customer	**CORRUGADORA GUATEMA**	REL	**L.CENTI**	**28/06/17**	issued	**28/06/2017**
job nr.	**4607**	REV			proj. sect.	**=TW4+Q0**
serial nr.	**COM17279**	DEF			page	**30 of 110**

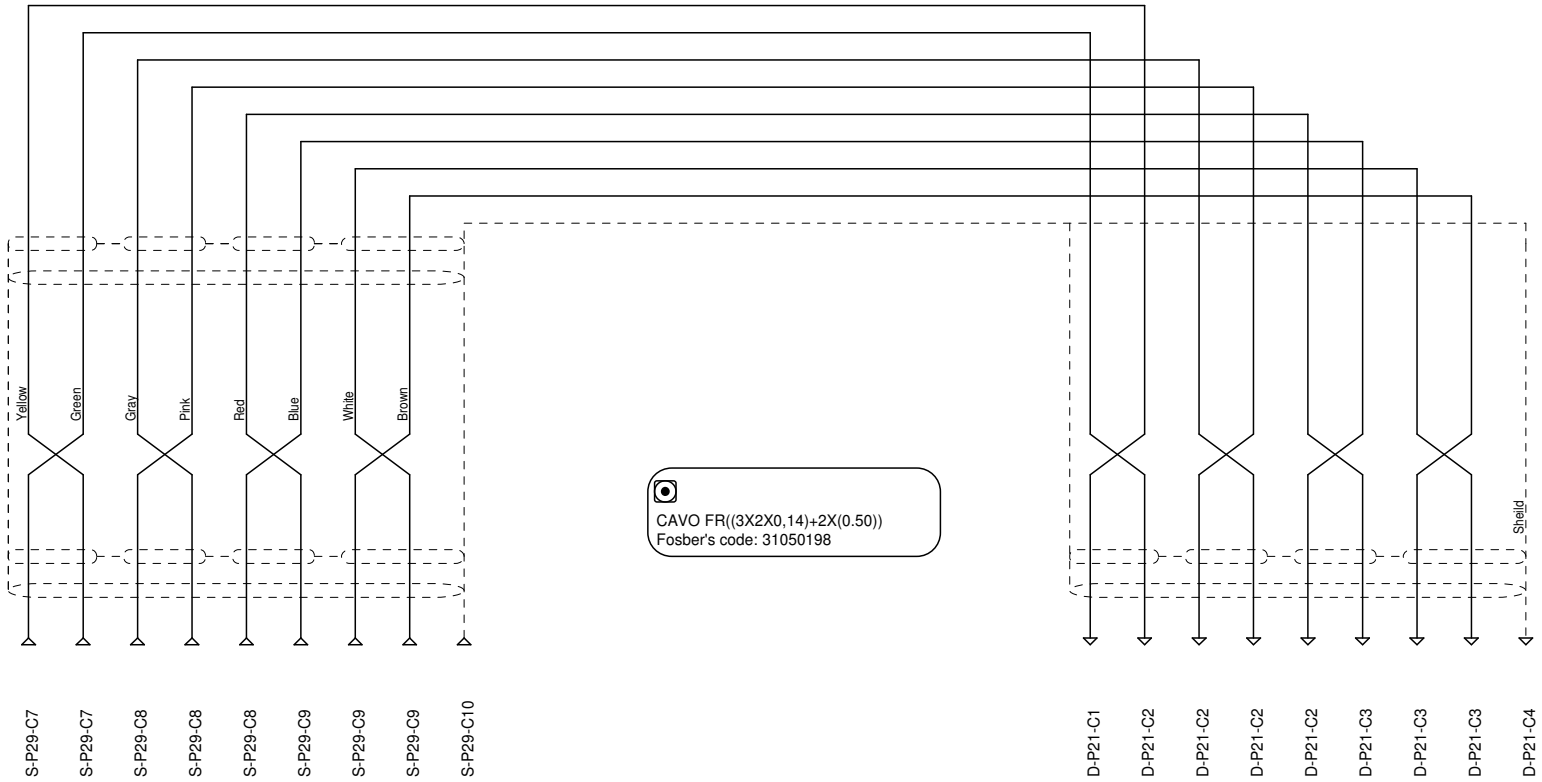

FOSBER S.p.A.
via Provinciale per Camaiore, 27/28 55060 Monsagrati (Lucca) - ITALIA
T. +39.0583.3891 - F. +39.0583.389205/385567
E-mail: info@fosber.it

TWIN 400 T.1
X9-X10 INVERTER BIELLA ASSE AUX
X9-X10 INVERTER BIELA EJE AUX

customer	CORRUGADORA GUATEMA	REL	L.CENTI	28/06/17	issued	28/06/2017
job nr.	4607	REV			proj. sect.	=TW4+Q0
serial nr.	COM17279	DEF			page	31 of 110

FOSBER S.p.A.
via Provinciale per Camaiore, 27/28 55060 Monsagrati (Lucca) - ITALIA
T. +39.0583.3891 - F. +39.0583.389205/385567
E-mail: info@fosber.it

TWIN 400 T.1
INVERTER CONTINUOS TRIM
INVERTER RECORTE CONTINUO

customer	**CORRUGADORA GUATEMA**	REL	**L.CENTI**	**28/06/17**	issued	**28/06/2017**
job nr.	**4607**	REV			proj. sect.	**=TW4+Q0**
serial nr.	**COM17279**	DEF			page	**32 of 110**

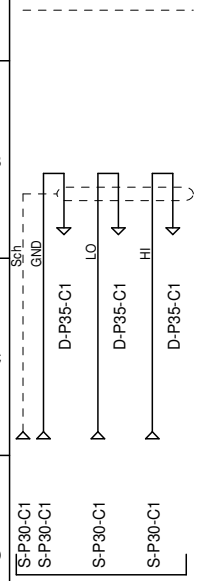

CAN OPEN NETWORK
CAN OPEN NETWORK

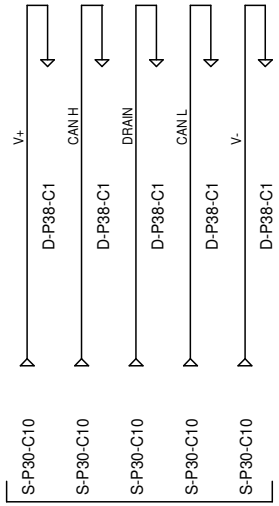

DEVICE NET NETWORK
DEVICE NET NETWORK

FOSBER S.p.A.
via Provinciale per Camaiore, 27/28 55060 Monsagrati (Lucca) - ITALIA
T. +39.0583.3891 - F. +39.0583.389205/385567
E-mail: info@fosber.it

TWIN 400 T.1
X9-X10 INVERTER CONTINUOS TRIM
X9-X10 INVERTER RECORTE CONTINUO

customer	**CORRUGADORA GUATEMA**	REL	**L.CENTI**	**28/06/17**	issued	**28/06/2017**
job nr.	**4607**	REV			proj. sect.	**=TW4+Q0**
serial nr.	**COM17279**	DEF			page	**33 of 110**

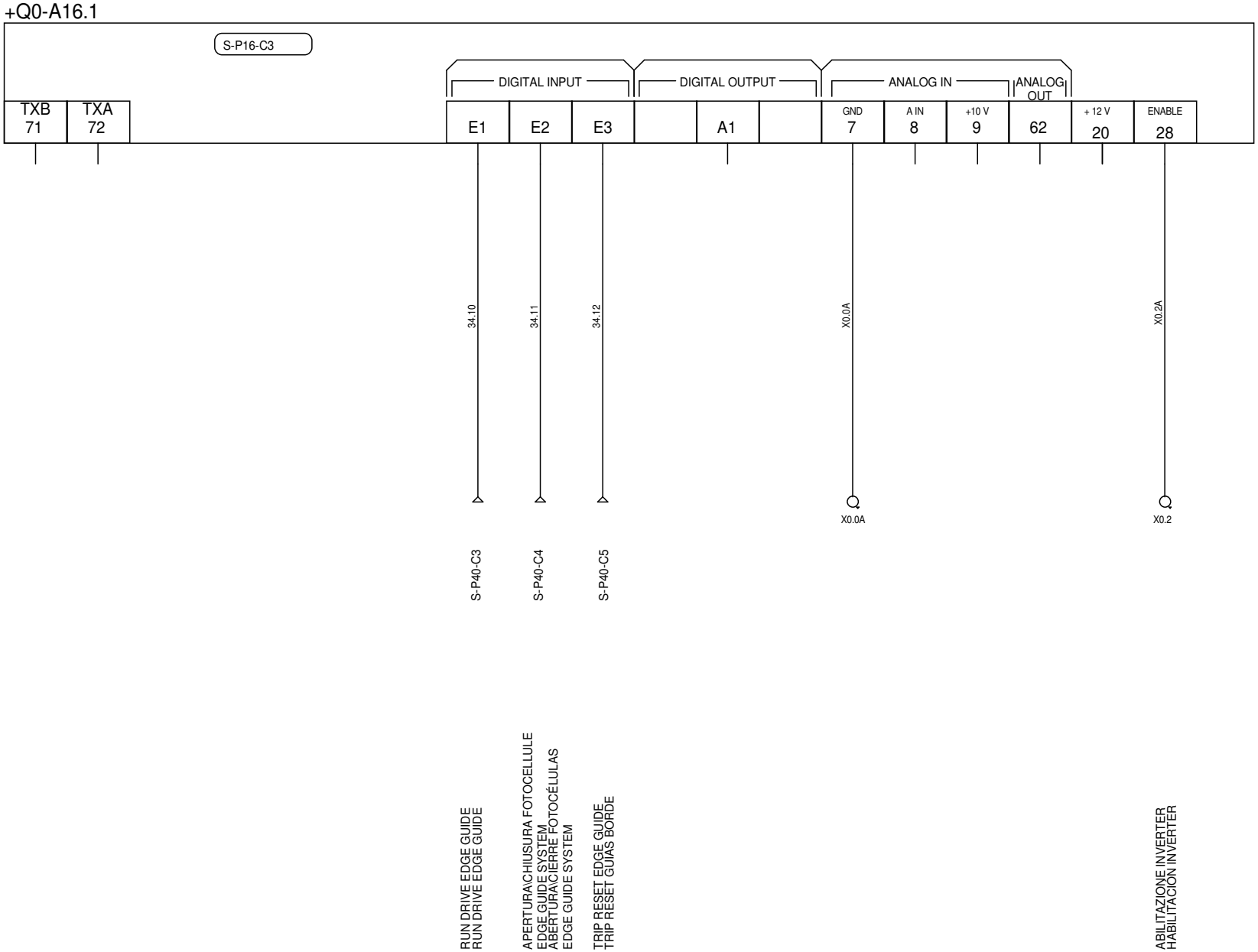

FOSBER S.p.A.
via Provinciale per Camaiore, 27/28 55060 Monsagrati (Lucca) - ITALIA
T. +39.0583.3891 - F. +39.0583.389205/385567
E-mail: info@fosber.it

TWIN 400 T.1
INVERTER EDGE GUIDE
INVERTER GUÍAS BORDE

customer	CORRUGADORA GUATEMA	REL	L.CENTI	28/06/17	issued	28/06/2017
job nr.	4607	REV			proj. sect.	=TW4+Q0
serial nr.	COM17279	DEF			page	34 of 110

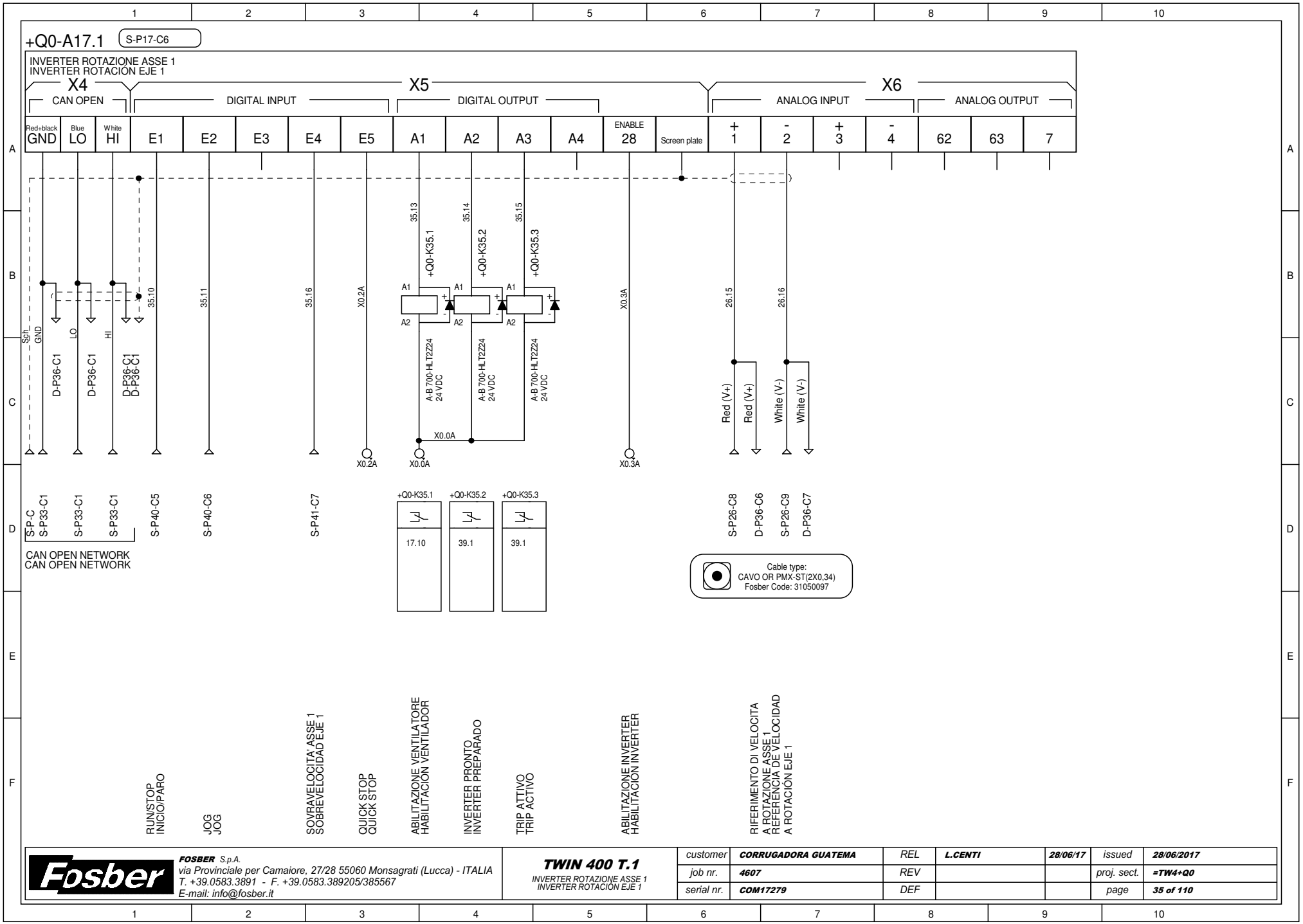
+Q0-A17.1
S-P17-C6
INVERTER ROTAZIONE ASSE 1
INVERTER ROTACIÓN EJE 1
X4
X5
X6
CAN OPEN
DIGITAL INPUT
DIGITAL OUTPUT
ANALOG INPUT
ANALOG OUTPUT
Red+black GND
Blue LO
White HI
E1
E2
E3
E4
E5
A1
A2
A3
A4
ENABLE 28
Screen plate
+ 1
- 2
+ 3
- 4
62
63
7
Sch
GND
LO
HI
D-P36-C1
35.10
35.11
35.16
X0.2A
35.13
35.14
35.15
+Q0-K35.1
+Q0-K35.2
+Q0-K35.3
A-B 700-HLT2Z24 24 VDC
X0.0A
X0.3A
26.15
26.16
Red (V+)
White (V-)
S-P-C
S-P33-C1
S-P40-C5
S-P40-C6
S-P41-C7
S-P26-C8
D-P36-C6
S-P26-C9
D-P36-C7
17.10
39.1
CAN OPEN NETWORK
CAN OPEN NETWORK
Cable type:
CAVO OR PMX-ST(2X0,34)
Fosber Code: 31050097
RUN/STOP
INICIO/PARO
JOG
JOG
SOVRAVELOCITA' ASSE 1
SOBREVELOCIDAD EJE 1
QUICK STOP
QUICK STOP
ABILITAZIONE VENTILATORE
HABILITACION VENTILADOR
INVERTER PRONTO
INVERTER PREPARADO
TRIP ATTIVO
TRIP ACTIVO
ABILITAZIONE INVERTER
HABILITACION INVERTER
RIFERIMENTO DI VELOCITA
A ROTAZIONE ASSE 1
REFERENCIA DE VELOCIDAD
A ROTACIÓN EJE 1
Fosber
FOSBER S.p.A.
via Provinciale per Camaiore, 27/28 55060 Monsagrati (Lucca) - ITALIA
T. +39.0583.3891 - F. +39.0583.389205/385567
E-mail: info@fosber.it
TWIN 400 T.1
INVERTER ROTAZIONE ASSE 1
INVERTER ROTACIÓN EJE 1
customer CORRUGADORA GUATEMA
REL L.CENTI 28/06/17
issued 28/06/2017
job nr. 4607
REV
proj. sect. =TW4+Q0
serial nr. COM17279
DEF
page 35 of 110

+Q0-A18.1 S-P18-C6

INVERTER ROTAZIONE ASSE 2
INVERTER ROTACIÓN EJE 2

X4			X5											X6						
CAN OPEN			DIGITAL INPUT					DIGITAL OUTPUT						ANALOG INPUT				ANALOG OUTPUT		
Red+black GND	Blue LO	White HI	E1	E2	E3	E4	E5	A1	A2	A3	A4	ENABLE 28	Screen plate	+ 1	- 2	+ 3	- 4	62	63	7

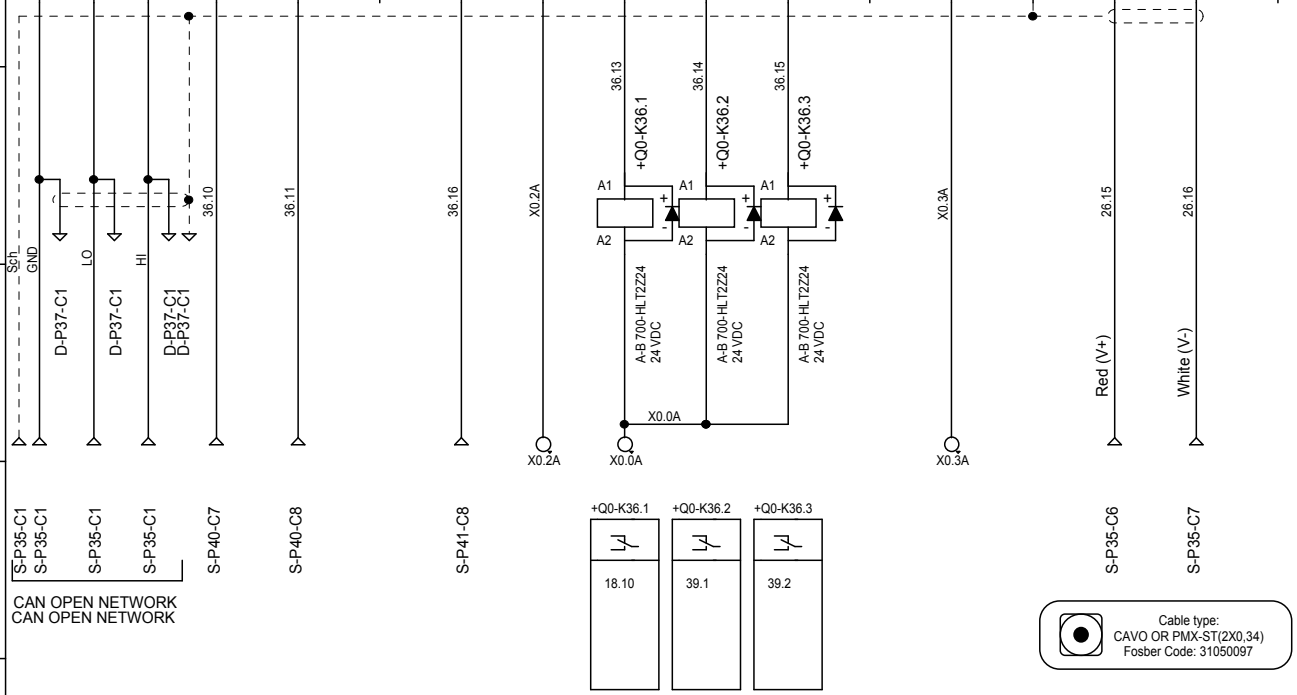

Cable type:
CAVO OR PMX-ST(2X0,34)
Fosber Code: 31050097

RUN/STOP INVERTER
RULLO ASSE 2
INICIO/PARO INVERTER
CILINDRO EJE 2

JOG INVERTER
RULLO ASSE 2
JOG INVERTER
CILINDRO EJE 2

SOVRAVELOCITA' ASSE 2
SOBREVELOCIDAD EJE 2

QUICK STOP
QUICK STOP

ABILITAZIONE VENTILATORE
HABILITACIÓN VENTILADOR

INVERTER PRONTO
INVERTER PREPARADO

TRIP ATTIVO
TRIP ACTIVO

ABILITAZIONE INVERTER
HABILITACIÓN INVERTER

RIFERIMENTO DI VELOCITA
A ROTAZIONE ASSE 2
REFERENCIA DE VELOCIDAD
A ROTACIÓN EJE 2

Fosber
FOSBER S.p.A.
via Provinciale per Camaiore, 27/28 55060 Monsagrati (Lucca) - ITALIA
T. +39.0583.3891 - F. +39.0583.389205/385567
E-mail: info@fosber.it

TWIN 400 T.1
INVERTER ROTAZIONE ASSE 2
INVERTER ROTACIÓN EJE 2

customer	CORRUGADORA GUATEMA	REL	L.CENTI	28/06/17	issued	28/06/2017
job nr.	4607	REV			proj. sect.	=TW4+Q0
serial nr.	COM17279	DEF			page	36 of 110

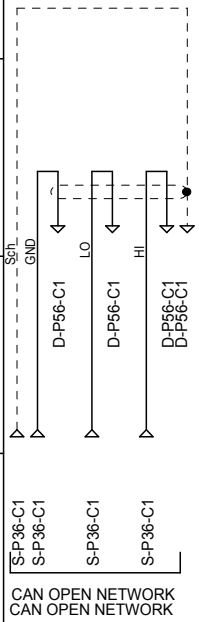

FOSBER S.p.A.
via Provinciale per Camaiore, 27/28 55060 Monsagrati (Lucca) - ITALIA
T. +39.0583.3891 - F. +39.0583.389205/385567
E-mail: info@fosber.it

TWIN 400 T.1
INVERTER ROTAZIONE ASSE AUSILIARIO
INVERTER ROTACIÓN EJE AUXILIAR

customer	**CORRUGADORA GUATEMA**	REL	**L.CENTI**	**28/06/17**	issued	**28/06/2017**
job nr.	**4607**	REV			proj. sect.	**=TW4+Q0**
serial nr.	**COM17279**	DEF			page	**37 of 110**

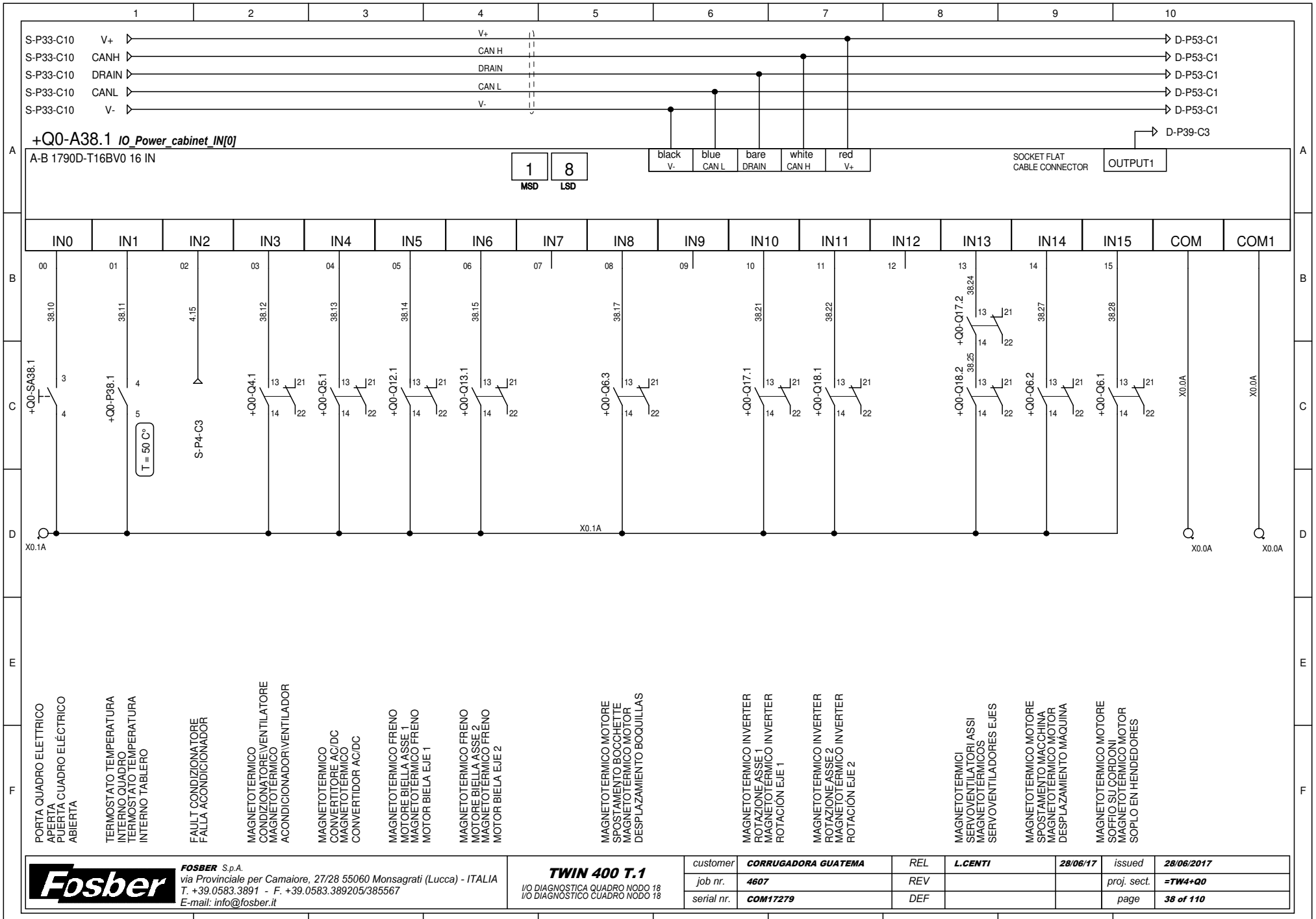
S-P33-C10 V+
S-P33-C10 CANH
S-P33-C10 DRAIN
S-P33-C10 CANL
S-P33-C10 V-
V+
CAN H
DRAIN
CAN L
V-
D-P53-C1
D-P39-C3
+Q0-A38.1 IO_Power_cabinet_IN[0]
A-B 1790D-T16BV0 16 IN
1 MSD
8 LSD
black V-
blue CAN L
bare DRAIN
white CAN H
red V+
SOCKET FLAT CABLE CONNECTOR
OUTPUT1
IN0 IN1 IN2 IN3 IN4 IN5 IN6 IN7 IN8 IN9 IN10 IN11 IN12 IN13 IN14 IN15 COM COM1
+Q0-SA38.1
+Q0-P38.1
T = 50 C°
S-P4-C3
+Q0-Q4.1
+Q0-Q5.1
+Q0-Q12.1
+Q0-Q13.1
+Q0-Q6.3
+Q0-Q17.1
+Q0-Q18.1
+Q0-Q17.2
+Q0-Q18.2
+Q0-Q6.2
+Q0-Q6.1
X0.1A
X0.0A
PORTA QUADRO ELETTRICO APERTA
PUERTA CUADRO ELÉCTRICO ABIERTA
TERMOSTATO TEMPERATURA INTERNO QUADRO
TERMOSTATO TEMPERATURA INTERNO TABLERO
FAULT CONDIZIONATORE
FALLA ACONDICIONADOR
MAGNETOTERMICO CONDIZIONATORE\VENTILATORE
MAGNETOTERMICO ACONDICIONADOR\VENTILADOR
MAGNETOTERMICO CONVERTITORE AC/DC
MAGNETOTERMICO CONVERTIDOR AC/DC
MAGNETOTERMICO FRENO MOTORE BIELLA ASSE 1
MAGNETOTERMICO FRENO MOTOR BIELA EJE 1
MAGNETOTERMICO FRENO MOTORE BIELLA ASSE 2
MAGNETOTERMICO FRENO MOTOR BIELA EJE 2
MAGNETOTERMICO MOTORE SPOSTAMENTO BOCCHETTE
MAGNETOTERMICO MOTOR DESPLAZAMIENTO BOQUILLAS
MAGNETOTERMICO INVERTER ROTAZIONE ASSE 1
MAGNETOTERMICO INVERTER ROTACIÓN EJE 1
MAGNETOTERMICO INVERTER ROTAZIONE ASSE 2
MAGNETOTERMICO INVERTER ROTACIÓN EJE 2
MAGNETOTERMICI SERVOVENTILATORI ASSI
MAGNETOTERMICOS SERVOVENTILADORES EJES
MAGNETOTERMICO MOTORE SPOSTAMENTO MACCHINA
MAGNETOTERMICO MOTOR DESPLAZAMIENTO MAQUINA
MAGNETOTERMICO MOTORE SOFFIO SU CORDONI
MAGNETOTERMICO MOTOR SOPLO EN HENDEDORES
FOSBER S.p.A.
via Provinciale per Camaiore, 27/28 55060 Monsagrati (Lucca) - ITALIA
T. +39.0583.3891 - F. +39.0583.389205/385567
E-mail: info@fosber.it
TWIN 400 T.1
I/O DIAGNOSTICA QUADRO NODO 18
I/O DIAGNÓSTICO CUADRO NODO 18
customer CORRUGADORA GUATEMA
REL L.CENTI 28/06/17
issued 28/06/2017
job nr. 4607
REV
proj. sect. =TW4+Q0
serial nr. COM17279
DEF
page 38 of 110

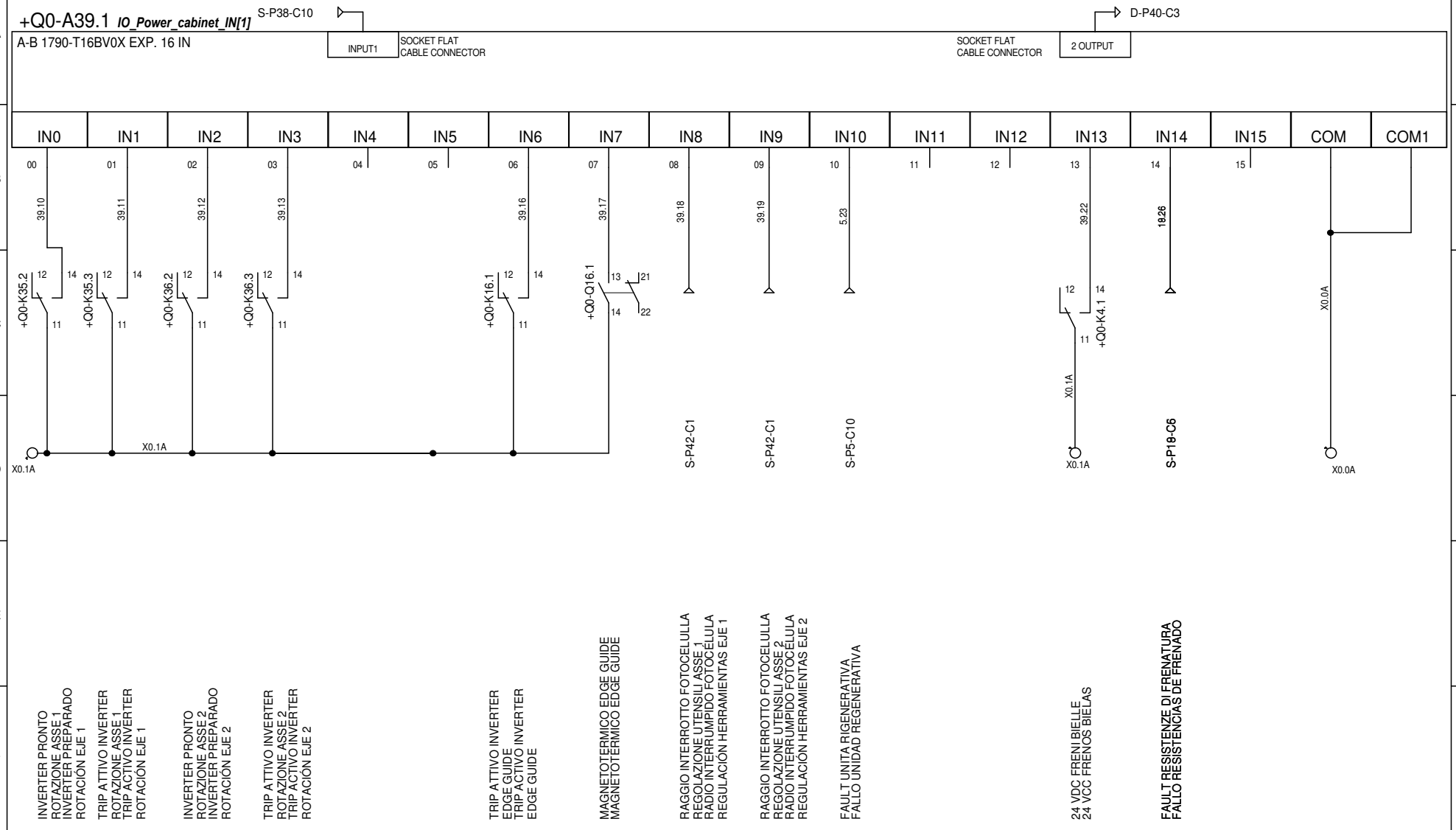

Fosber
FOSBER S.p.A.
via Provinciale per Camaiore, 27/28 55060 Monsagrati (Lucca) - ITALIA
T. +39.0583.3891 - F. +39.0583.389205/385567
E-mail: info@fosber.it

TWIN 400 T.1
I/O COMANDO ASSI
I/O MANDO EJES

customer	CORRUGADORA GUATEMA	REL	L.CENTI	28/06/17	issued	28/06/2017
job nr.	4607	REV			proj. sect.	=TW4+Q0
serial nr.	COM17279	DEF			page	39 of 110

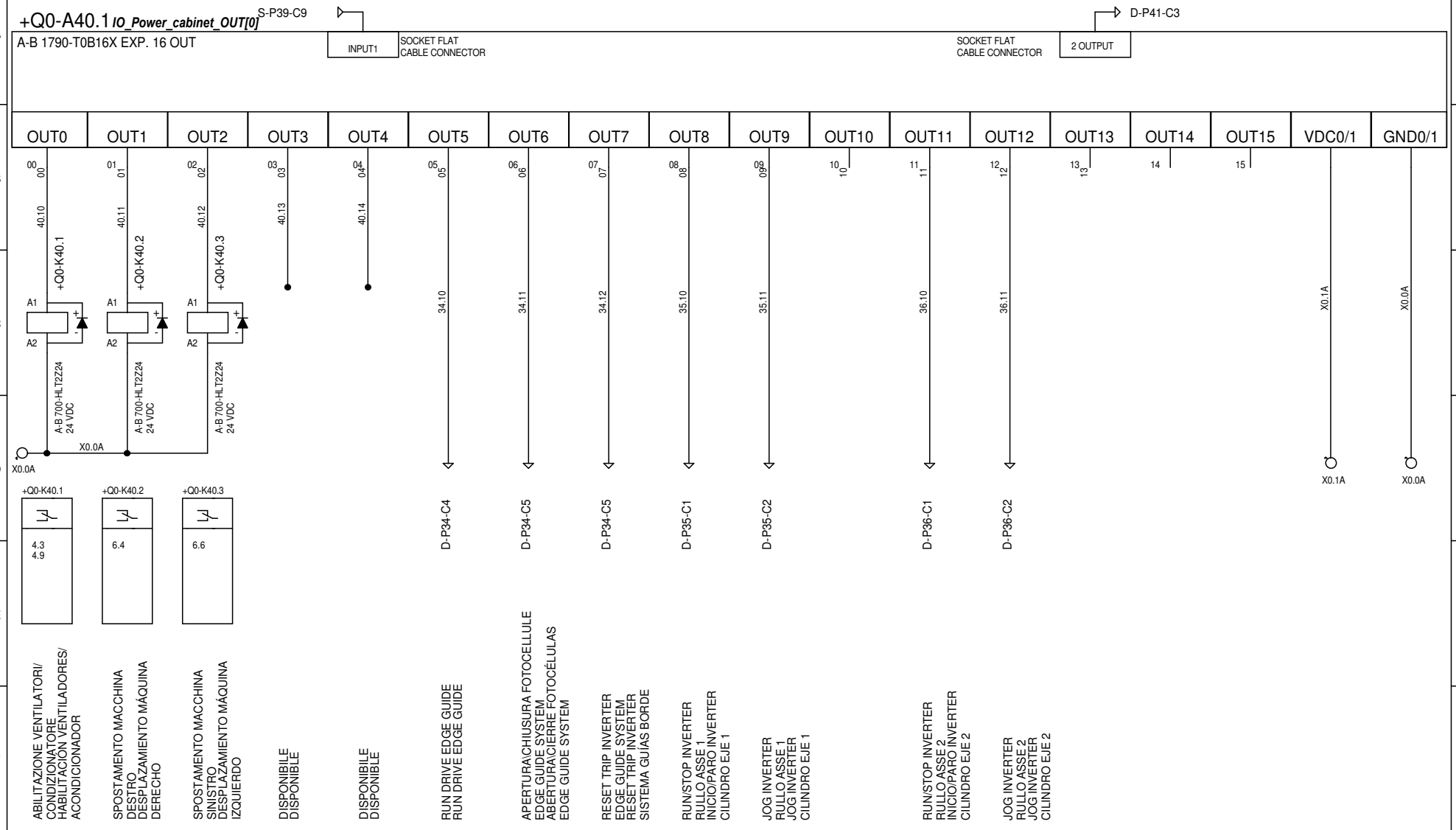

Fosber
FOSBER S.p.A.
via Provinciale per Camaiore, 27/28 55060 Monsagrati (Lucca) - ITALIA
T. +39.0583.3891 - F. +39.0583.389205/385567
E-mail: info@fosber.it

TWIN 400 T.1
I/O COMANDI INTERNO QUADRO
I/O MANDOS INTERIOR CUADRO

customer	CORRUGADORA GUATEMA	REL	L.CENTI	28/06/17	issued	28/06/2017
job nr.	4607	REV			proj. sect.	=TW4+Q0
serial nr.	COM17279	DEF			page	40 of 110

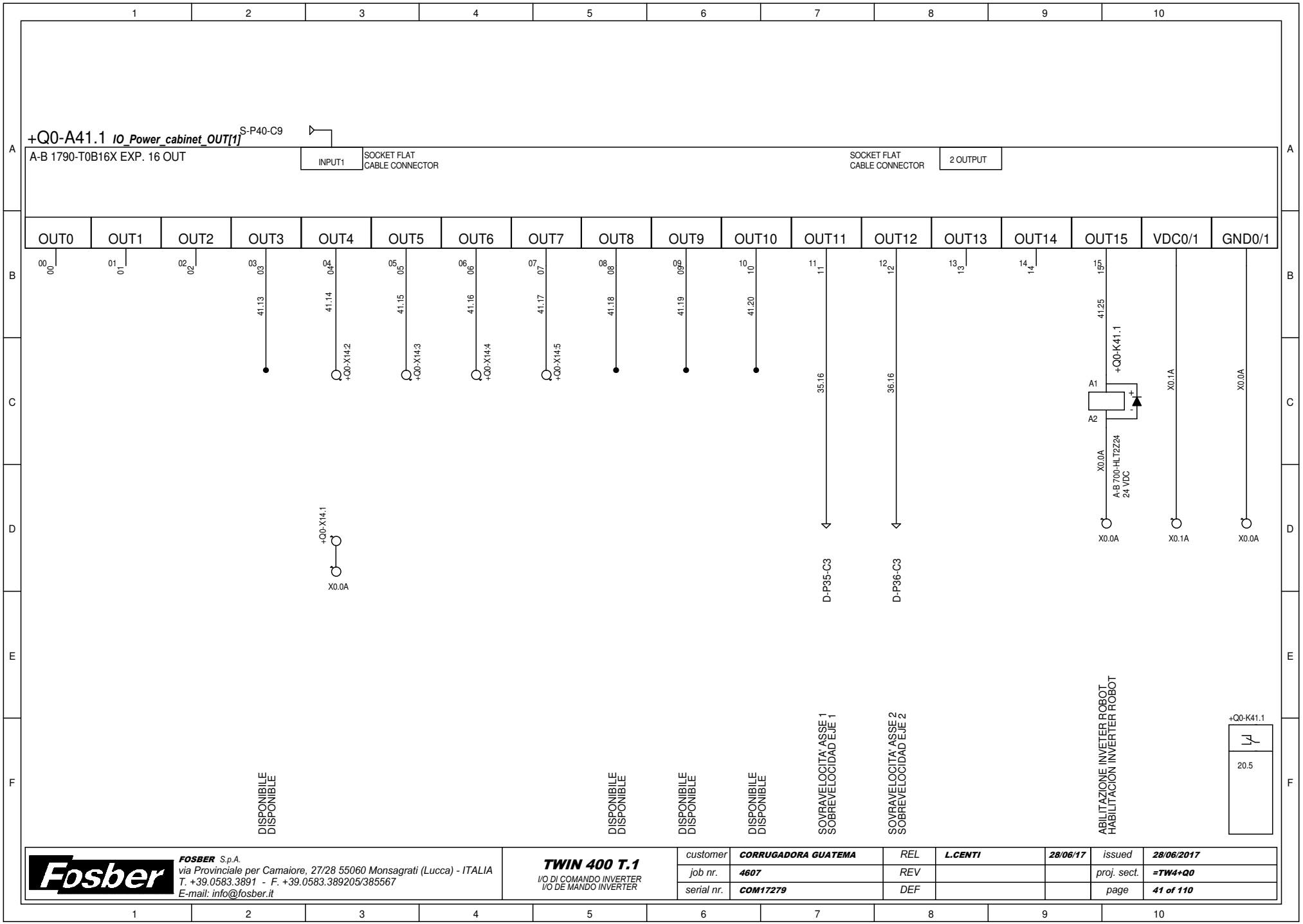

FOSBER S.p.A. via Provinciale per Camaiore, 27/28 55060 Monsagrati (Lucca) - ITALIA T. +39.0583.3891 - F. +39.0583.389205/385567 E-mail: info@fosber.it	**TWIN 400 T.1** I/O DI COMANDO INVERTER I/O DE MANDO INVERTER	customer	CORRUGADORA GUATEMA	REL	L.CENTI	28/06/17	issued	28/06/2017
		job nr.	4607	REV			proj. sect.	=TW4+Q0
		serial nr.	COM17279	DEF			page	41 of 110

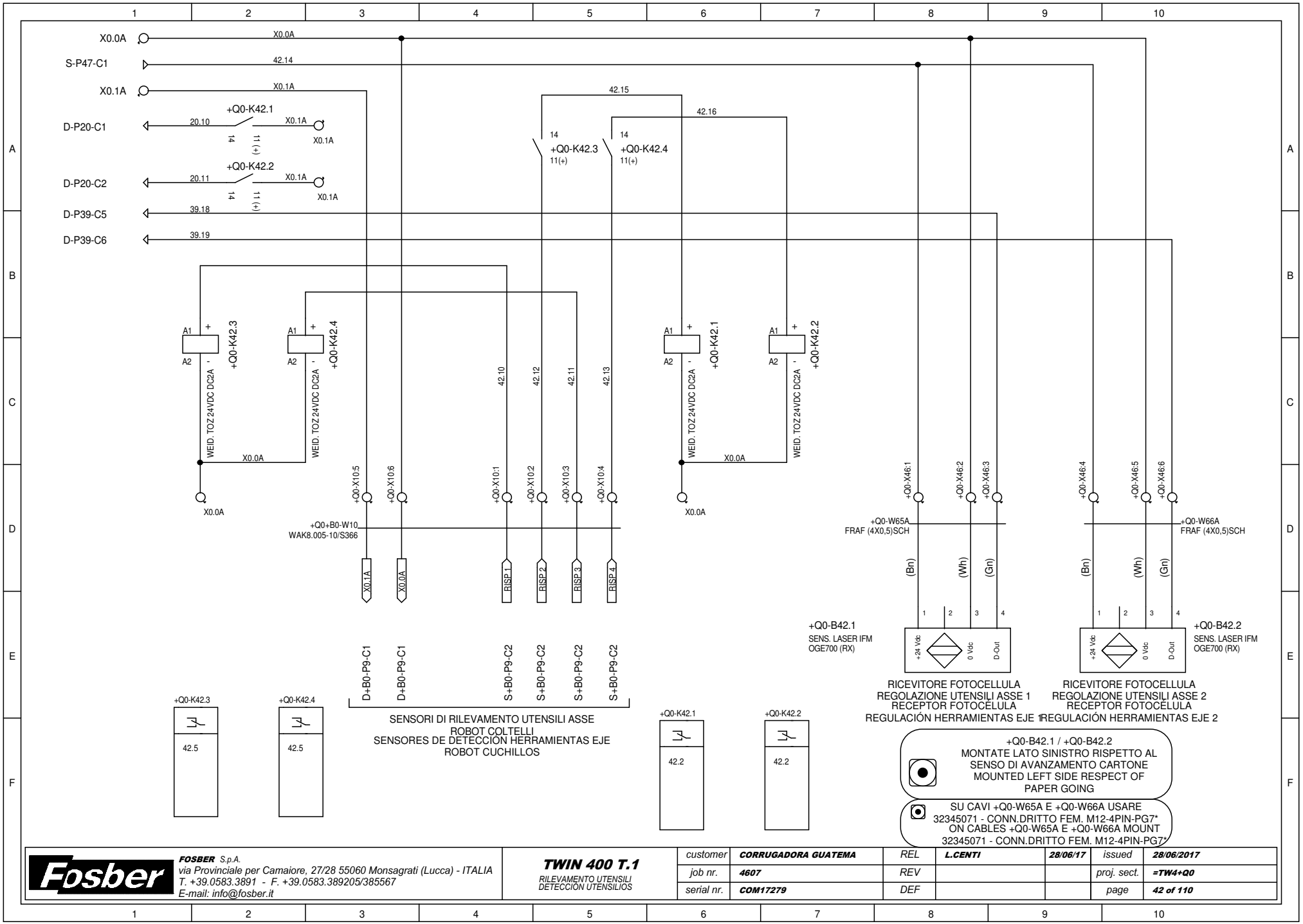

FOSBER S.p.A.
via Provinciale per Camaiore, 27/28 55060 Monsagrati (Lucca) - ITALIA
T. +39.0583.3891 - F. +39.0583.389205/385567
E-mail: info@fosber.it

TWIN 400 T.1
RILEVAMENTO UTENSILI
DETECCIÓN UTENSILIOS

customer	CORRUGADORA GUATEMA	REL	L.CENTI	28/06/17	issued	28/06/2017
job nr.	4607	REV			proj. sect.	=TW4+Q0
serial nr.	COM17279	DEF			page	42 of 110

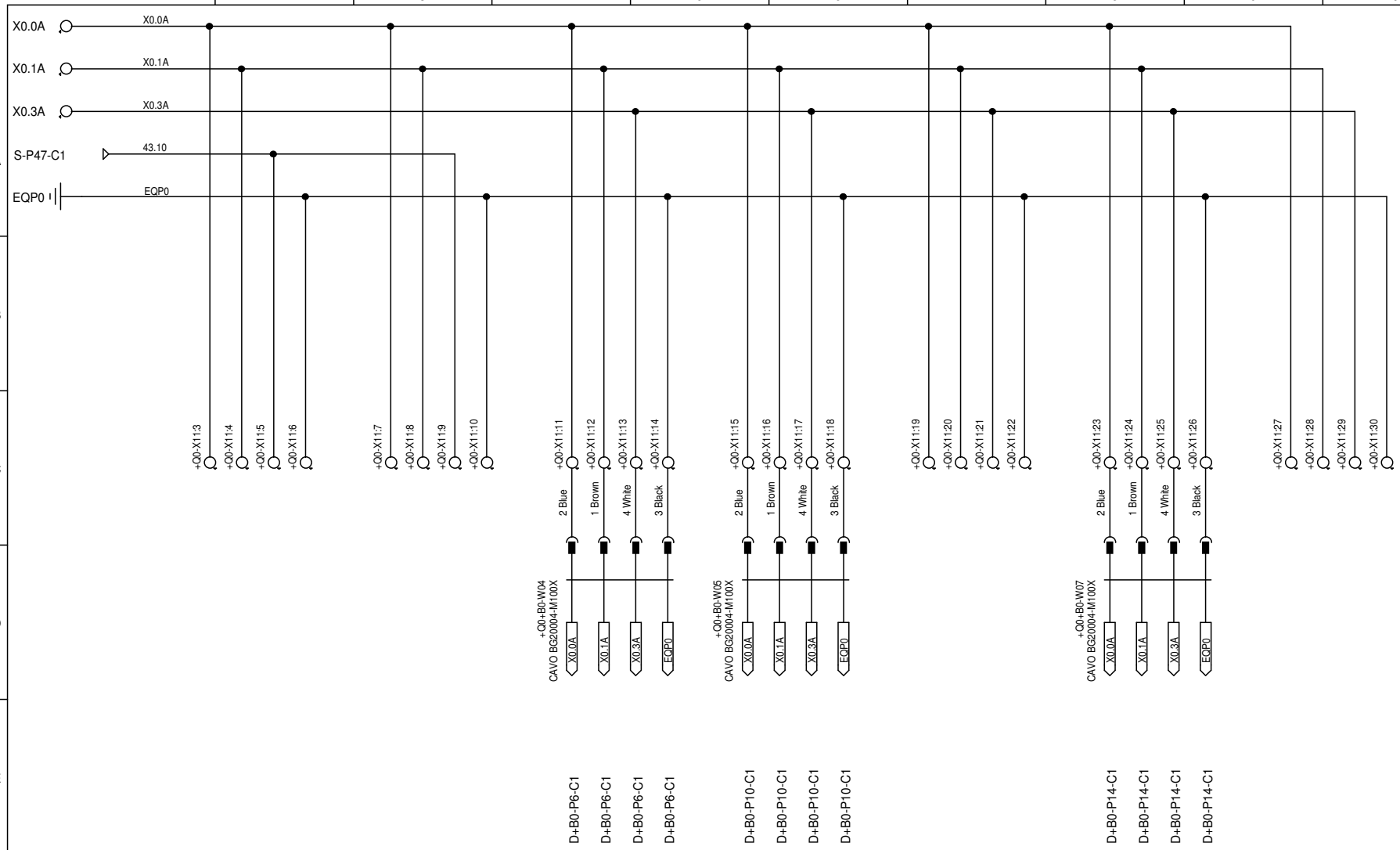

Utilizzare cavetti precablati
con prolunga e connettori maschio femmina
32345179 CAVO BG20004-M100X
32345070 CONN.DRITTO MAS. M12-4PIN-PG7
32345071 CONN.DRITTO FEM. M12-4PIN-PG7

ALIMENTAZIONE MODULO
REMOTO ROBOT
COLTELLI
ALIMENTACIÓN MÓDULO
REMOTO ROBOT
CUCHILLOS

ALIMENTAZIONE MODULO
REMOTO CARRO ROBOT
CORDONI SUP. 1
ALIMENTACIÓN MÓDULO
REMOTO CARRO ROBOT
HENDEDORES SUP. 1

ALIMENTAZIONE MODULO
REMOTO CARRO ROBOT
CORDONI INF. 1
ALIMENTACIÓN MÓDULO
REMOTO CARRO ROBOT
HENDED. INF. 1

Fosber
FOSBER S.p.A.
via Provinciale per Camaiore, 27/28 55060 Monsagrati (Lucca) - ITALIA
T. +39.0583.3891 - F. +39.0583.389205/385567
E-mail: info@fosber.it

TWIN 400 T.1
ALIMENTAZIONE MODULI REMOTI
ALIMENTACIÓN MÓDULOS REMOTOS

customer	**CORRUGADORA GUATEMA**	REL	**L.CENTI**	**28/06/17**	issued	**28/06/2017**
job nr.	**4607**	REV			proj. sect.	**=TW4+Q0**
serial nr.	**COM17279**	DEF			page	**43 of 110**

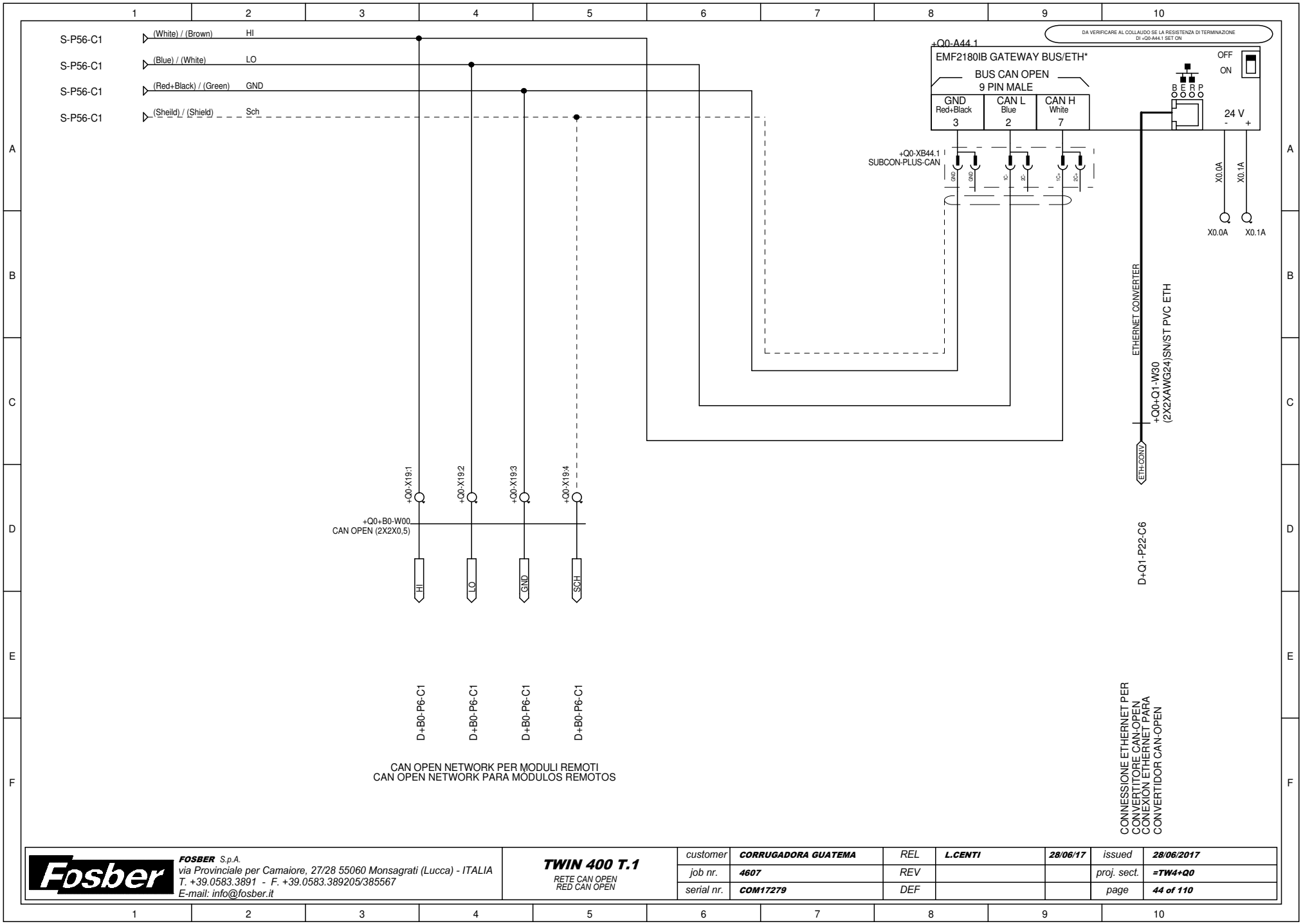

FOSBER S.p.A.
via Provinciale per Camaiore, 27/28 55060 Monsagrati (Lucca) - ITALIA
T. +39.0583.3891 - F. +39.0583.389205/385567
E-mail: info@fosber.it

TWIN 400 T.1
RETE CAN OPEN
RED CAN OPEN

customer	CORRUGADORA GUATEMA	REL	L.CENTI	28/06/17	issued	28/06/2017
job nr.	4607	REV			proj. sect.	=TW4+Q0
serial nr.	COM17279	DEF			page	44 of 110

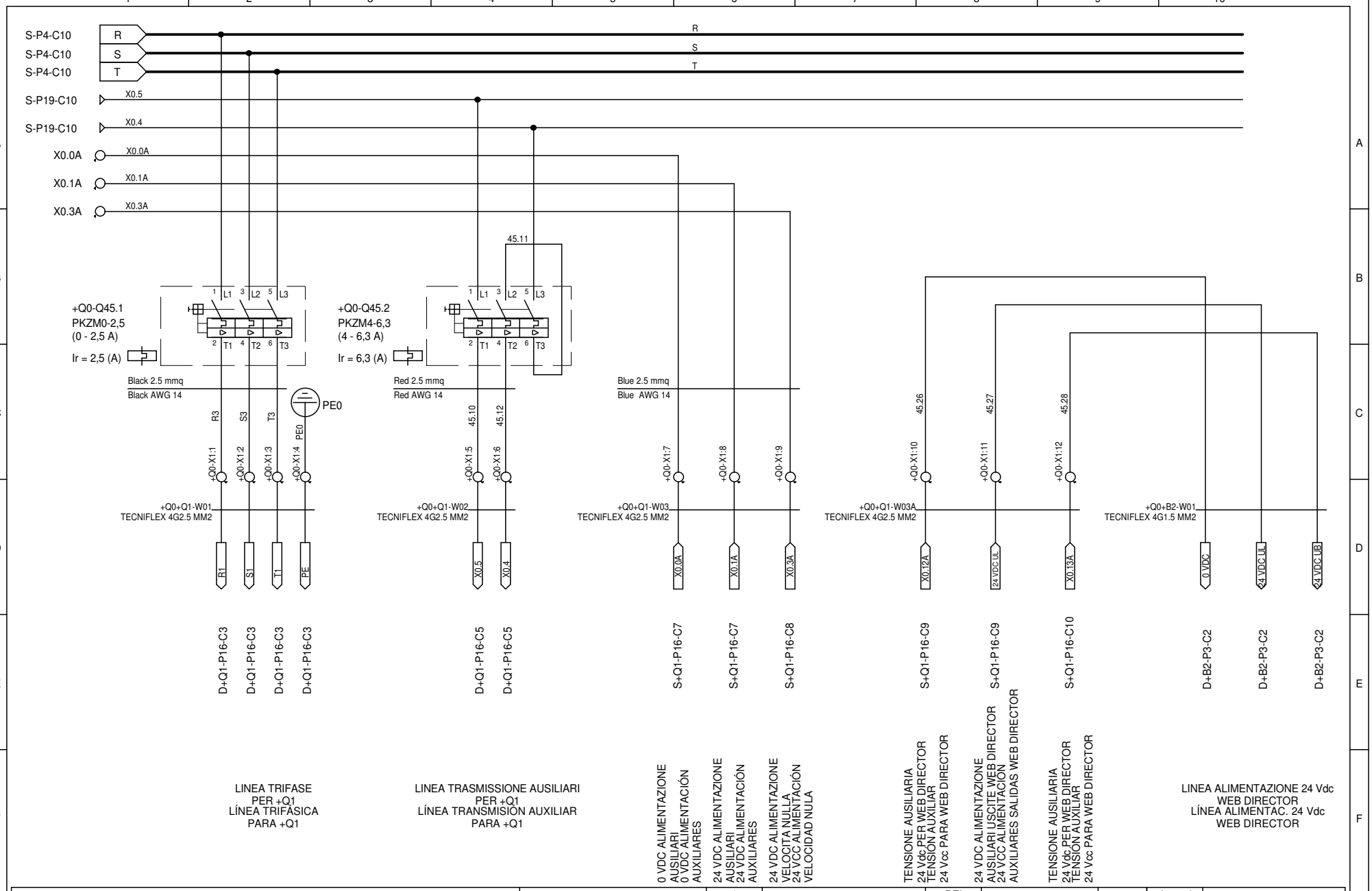

FOSBER S.p.A. via Provinciale per Camaiore, 27/28 55060 Monsagrati (Lucca) - ITALIA T. +39.0583.3891 - F. +39.0583.389205/385567 E-mail: info@fosber.it	**TWIN 400 T.1** ALIMENTAZIONE PER +Q1 ALIMENTACIÓN PARA +Q1	customer	CORRUGADORA GUATEMA	REL	L.CENTI	28/06/17	issued	28/06/2017
		job nr.	4607	REV			proj. sect.	=TW4+Q0
		serial nr.	COM17279	DEF			page	45 of 110

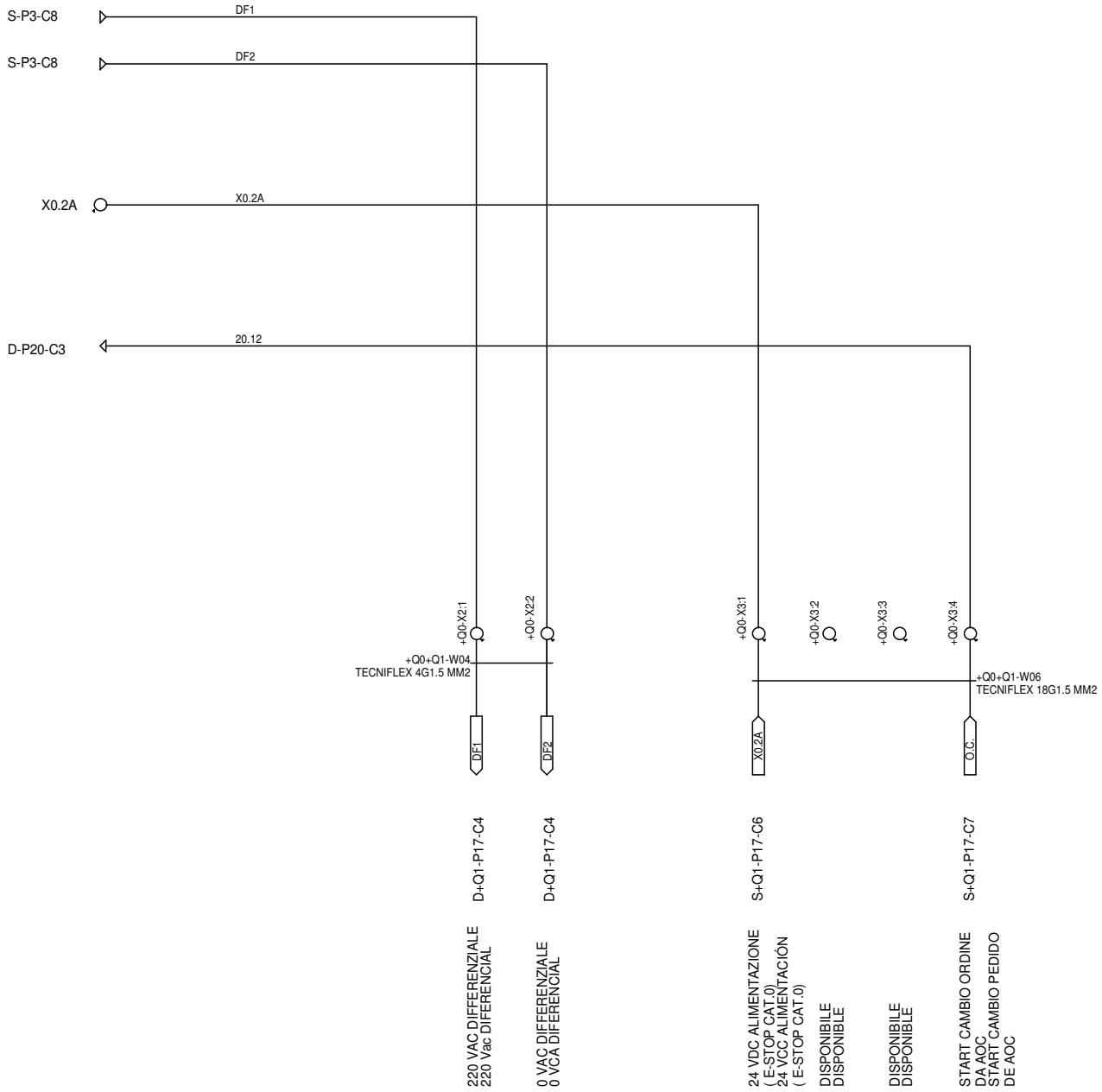

FOSBER S.p.A.
via Provinciale per Camaiore, 27/28 55060 Monsagrati (Lucca) - ITALIA
T. +39.0583.3891 - F. +39.0583.389205/385567
E-mail: info@fosber.it

TWIN 400 T.1
INTERFACCIA +Q1 1/2
INTERFAZ +Q1 1/2

customer	**CORRUGADORA GUATEMA**	REL	**L.CENTI**	**28/06/17**	issued	**28/06/2017**
job nr.	**4607**	REV			proj. sect.	**=TW4+Q0**
serial nr.	**COM17279**	DEF			page	**46 of 110**

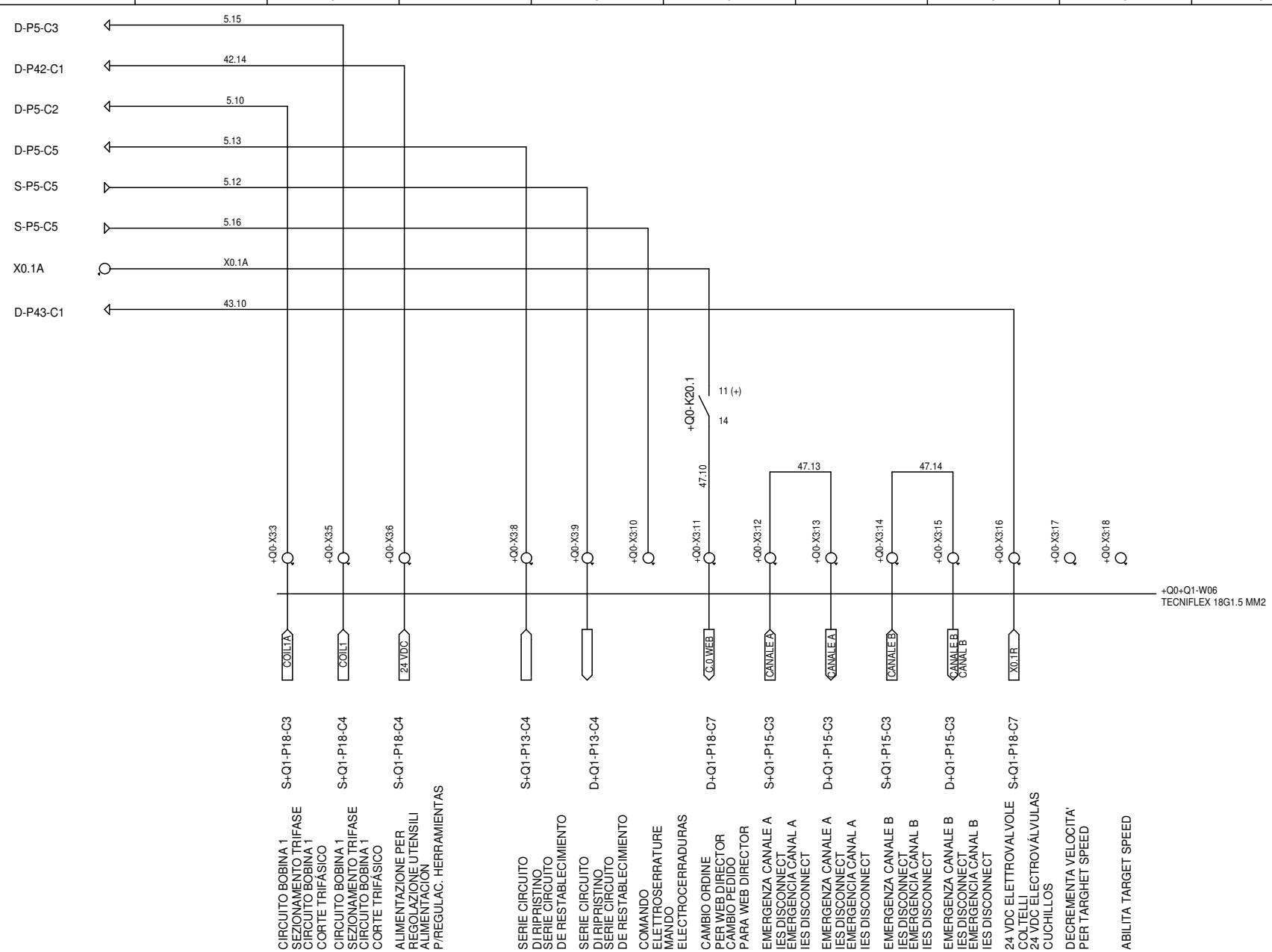

FOSBER S.p.A.
via Provinciale per Camaiore, 27/28 55060 Monsagrati (Lucca) - ITALIA
T. +39.0583.3891 - F. +39.0583.389205/385567
E-mail: info@fosber.it

TWIN 400 T.1
INTERFACCIA +Q1 2/2
INTERFAZ +Q1 2/2

customer	CORRUGADORA GUATEMA	REL	L.CENTI	28/06/17	issued	28/06/2017
job nr.	4607	REV			proj. sect.	=TW4+Q0
serial nr.	COM17279	DEF			page	47 of 110

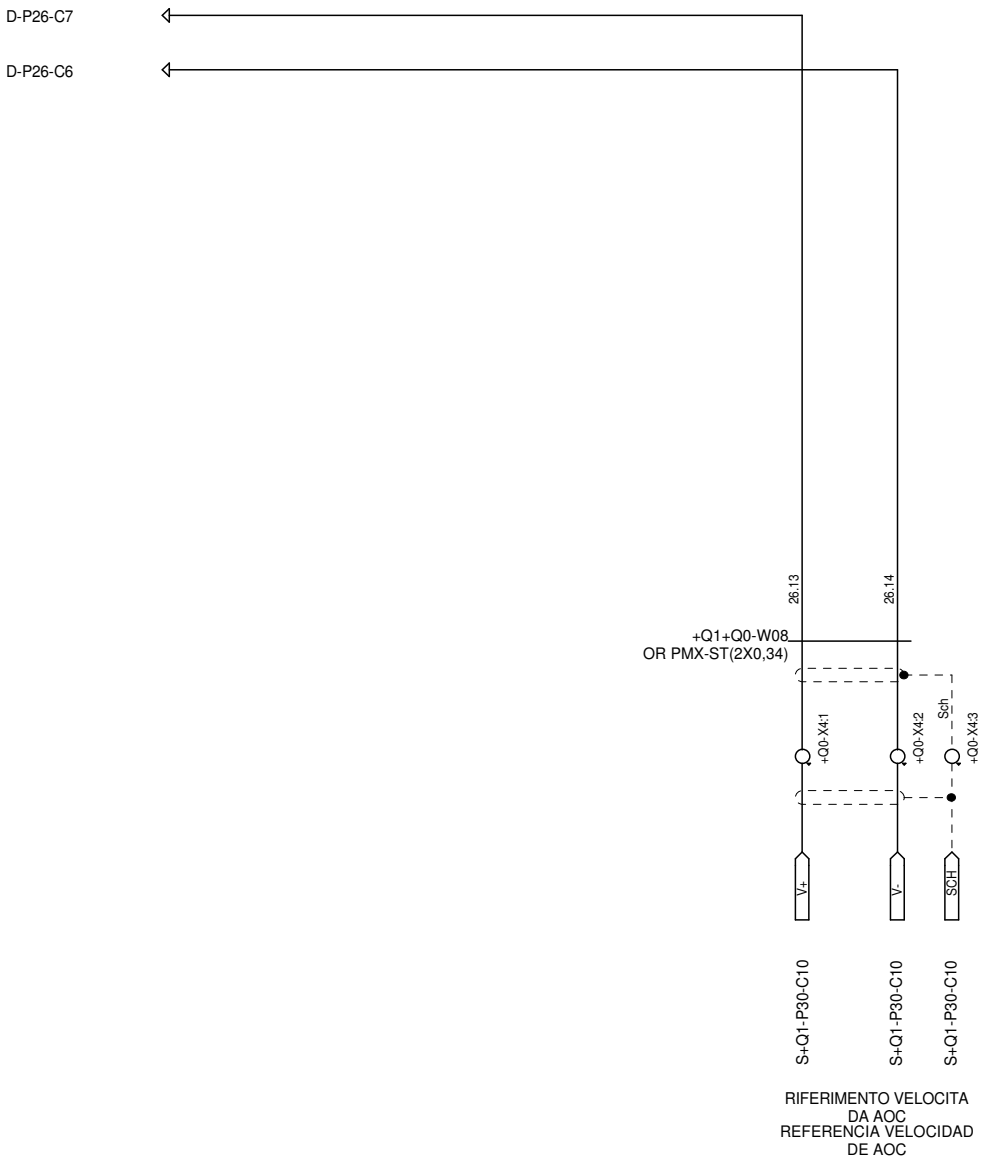

FOSBER S.p.A.
via Provinciale per Camaiore, 27/28 55060 Monsagrati (Lucca) - ITALIA
T. +39.0583.3891 - F. +39.0583.389205/385567
E-mail: info@fosber.it

TWIN 400 T.1

RIFERIMENTI VELOCITA IN
REFERENCIAS VELOCIDAD IN

customer	**CORRUGADORA GUATEMA**	REL	**L.CENTI**	**28/06/17**	issued	**28/06/2017**
job nr.	**4607**	REV			proj. sect.	**=TW4+Q0**
serial nr.	**COM17279**	DEF			page	**48 of 110**

FOSBER S.p.A.
via Provinciale per Camaiore, 27/28 55060 Monsagrati (Lucca) - ITALIA
T. +39.0583.3891 - F. +39.0583.389205/385567
E-mail: info@fosber.it

TWIN 400 T.1

PAGINA VUOTA
PÁGINA VACÍA

customer	**CORRUGADORA GUATEMA**	REL	**L.CENTI**	**28/06/17**	issued	**28/06/2017**
job nr.	**4607**	REV			proj. sect.	**=TW4+Q0**
serial nr.	**COM17279**	DEF			page	**49 of 110**

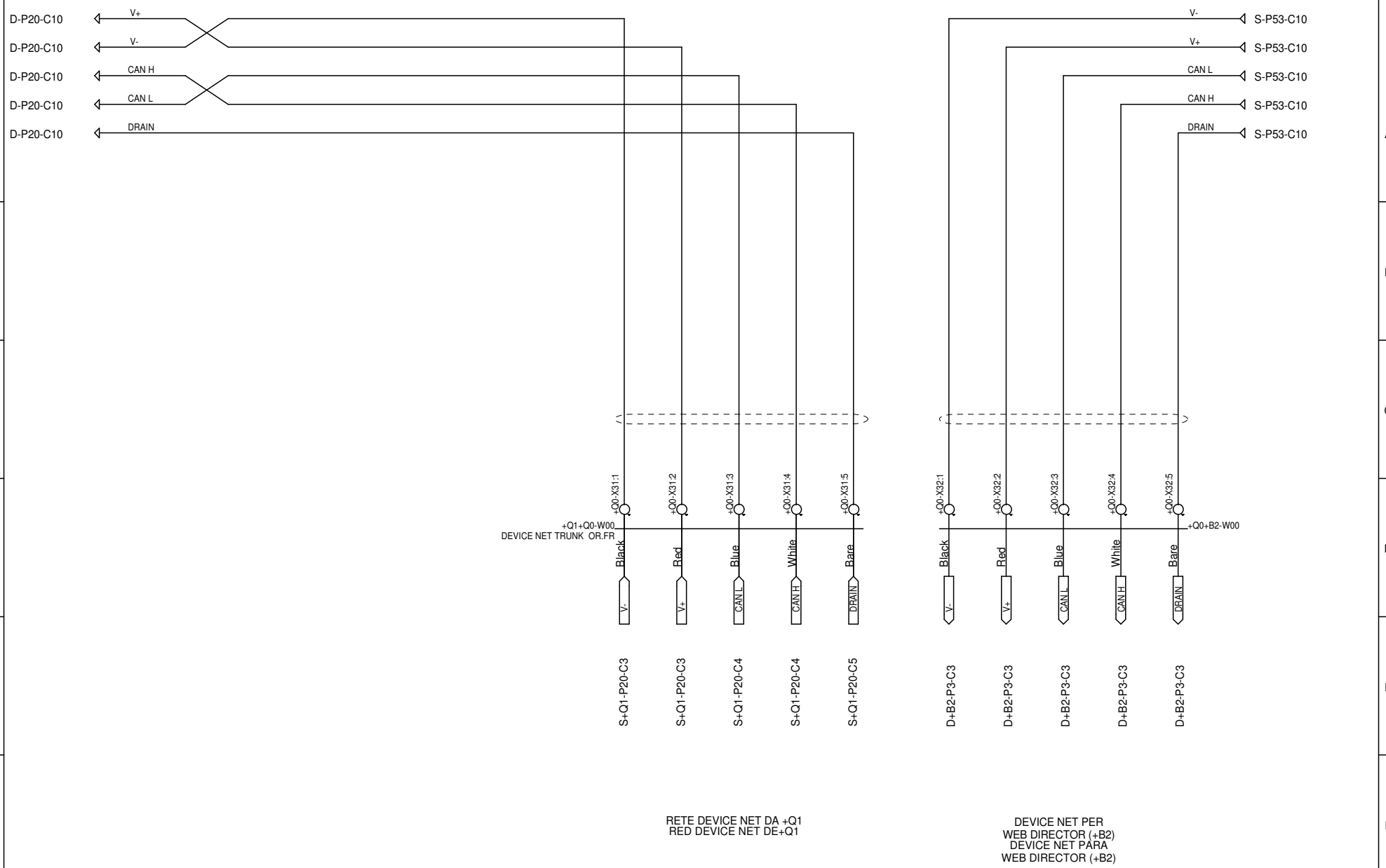

RETE DEVICE NET DA +Q1
RED DEVICE NET DE+Q1

DEVICE NET PER
WEB DIRECTOR (+B2)
DEVICE NET PARA
WEB DIRECTOR (+B2)

FOSBER S.p.A.
via Provinciale per Camaiore, 27/28 55060 Monsagrati (Lucca) - ITALIA
T. +39.0583.3891 - F. +39.0583.389205/385567
E-mail: info@fosber.it

TWIN 400 T.1
RETE DEVICE NET DA +Q1
RED DEVICE NET DE+Q1

customer	**CORRUGADORA GUATEMA**	REL	**L.CENTI**	**28/06/17**	issued	**28/06/2017**
job nr.	**4607**	REV			proj. sect.	**=TW4+Q0**
serial nr.	**COM17279**	DEF			page	**50 of 110**

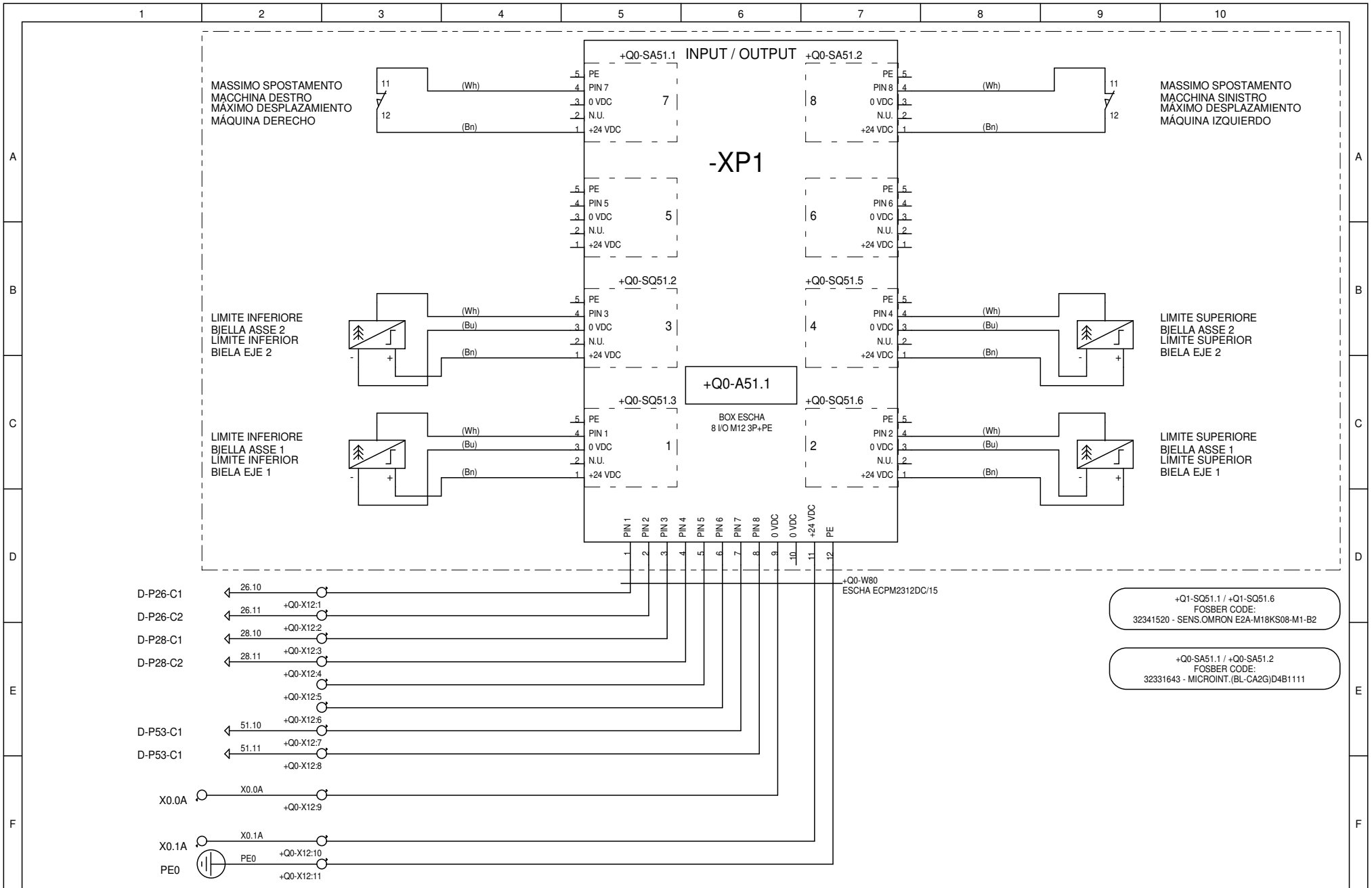

FOSBER S.p.A.
via Provinciale per Camaiore, 27/28 55060 Monsagrati (Lucca) - ITALIA
T. +39.0583.3891 - F. +39.0583.389205/385567
E-mail: info@fosber.it

TWIN 400 T.1
MORSETTIERA PASSIVA -XP1
TABLERO DE BORNES PASIVA -XP1

customer	**CORRUGADORA GUATEMA**	REL	**L.CENTI**	**28/06/17**	issued	**28/06/2017**
job nr.	**4607**	REV			proj. sect.	**=TW4+Q0**
serial nr.	**COM17279**	DEF			page	**51 of 110**

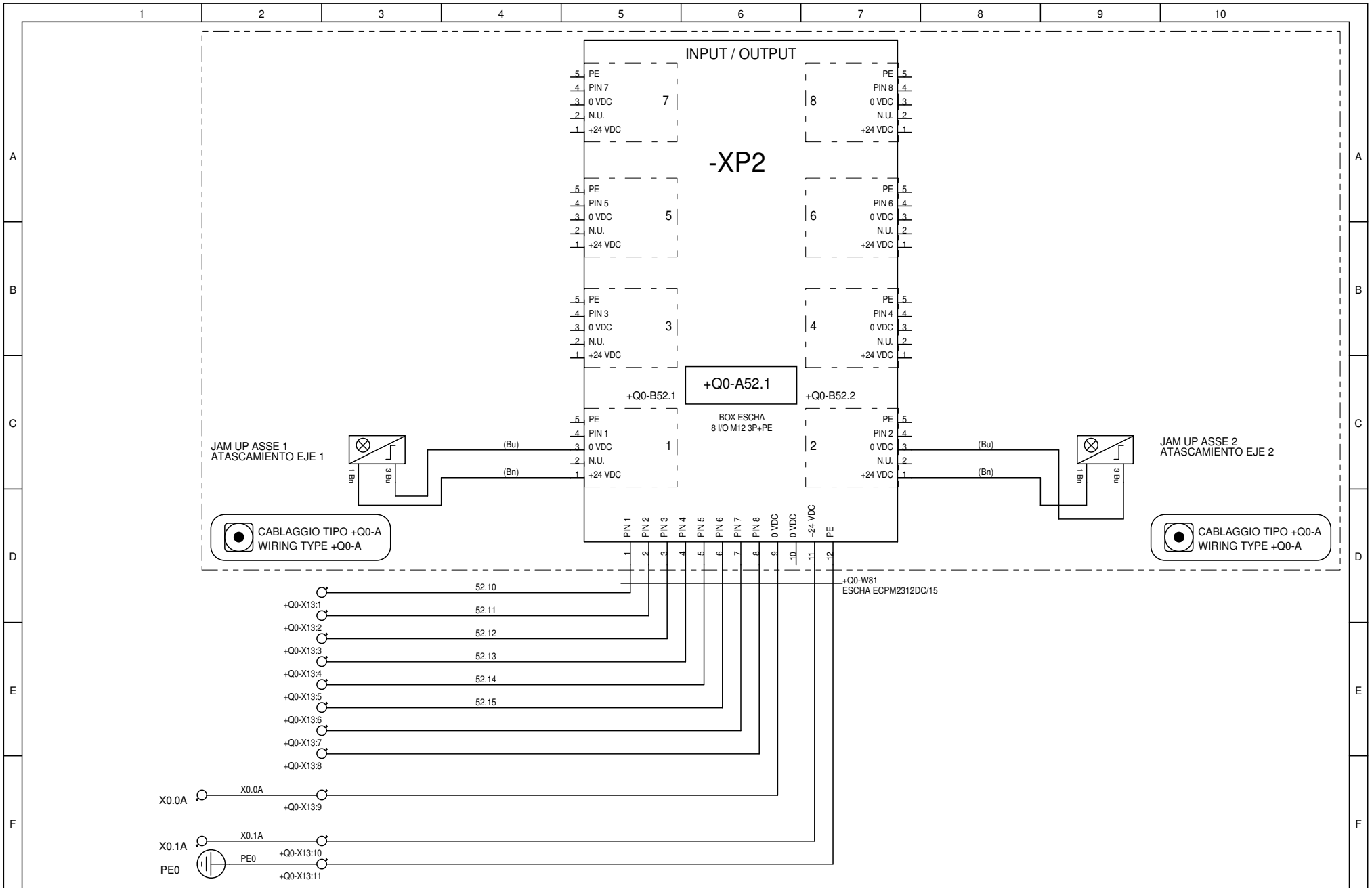

FOSBER S.p.A.
via Provinciale per Camaiore, 27/28 55060 Monsagrati (Lucca) - ITALIA
T. +39.0583.3891 - F. +39.0583.389205/385567
E-mail: info@fosber.it

TWIN 400 T.1
MORSETTIERA PASSIVA -XP2
TABLERO DE BORNES PASIVA -XP2

customer	CORRUGADORA GUATEMA	REL	L.CENTI	28/06/17	issued	28/06/2017
job nr.	4607	REV			proj. sect.	=TW4+Q0
serial nr.	COM17279	DEF			page	52 of 110

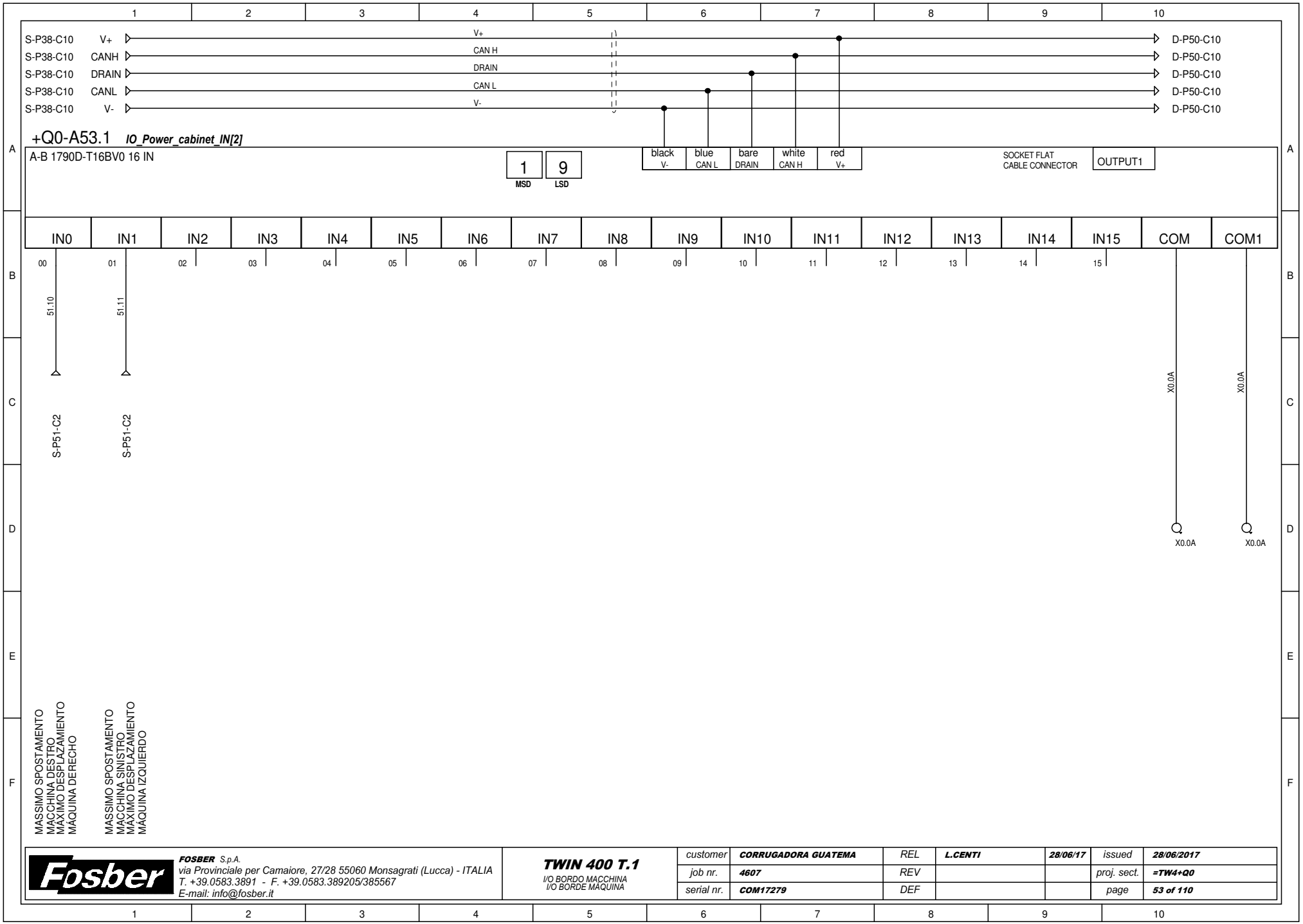

Fosber

FOSBER S.p.A.
via Provinciale per Camaiore, 27/28 55060 Monsagrati (Lucca) - ITALIA
T. +39.0583.3891 - F. +39.0583.389205/385567
E-mail: info@fosber.it

TWIN 400 T.1
I/O BORDO MACCHINA
I/O BORDE MÁQUINA

customer	CORRUGADORA GUATEMA	REL	L.CENTI	28/06/17	issued	28/06/2017
job nr.	4607	REV			proj. sect.	=TW4+Q0
serial nr.	COM17279	DEF			page	53 of 110

FOSBER S.p.A.
via Provinciale per Camaiore, 27/28 55060 Monsagrati (Lucca) - ITALIA
T. +39.0583.3891 - F. +39.0583.389205/385567
E-mail: info@fosber.it

TWIN 400 T.1

PAGINA LASCIATA VUOTA
PÁGINA DEJADA EN BLANCO

customer	**CORRUGADORA GUATEMA**	REL	**L.CENTI**	**28/06/17**	issued	**28/06/2017**
job nr.	**4607**	REV			proj. sect.	**=TW4+Q0**
serial nr.	**COM17279**	DEF			page	**54 of 110**

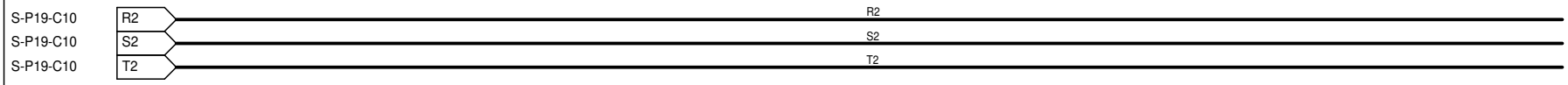

FOSBER S.p.A.
via Provinciale per Camaiore, 27/28 55060 Monsagrati (Lucca) - ITALIA
T. +39.0583.3891 - F. +39.0583.389205/385567
E-mail: info@fosber.it

TWIN 400 T.1
INVERTER RULLO MOTORIZZATO
INVERTER RODILLO MOTORIZADO

customer	CORRUGADORA GUATEMA	REL	L.CENTI	28/06/17	issued	28/06/2017
job nr.	4607	REV			proj. sect.	=TW4+Q0
serial nr.	COM17279	DEF			page	55 of 110

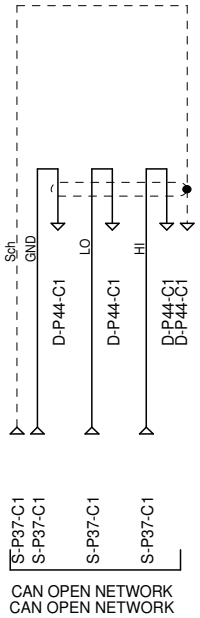

FOSBER S.p.A.
via Provinciale per Camaiore, 27/28 55060 Monsagrati (Lucca) - ITALIA
T. +39.0583.3891 - F. +39.0583.389205/385567
E-mail: info@fosber.it

TWIN 400 T.1
INVERTER RULLO MOTORIZZATO
INVERTER RODILLO MOTORIZADO

customer	**CORRUGADORA GUATEMA**	REL	**L.CENTI**	**28/06/17**	issued	**28/06/2017**
job nr.	**4607**	REV			proj. sect.	**=TW4+Q0**
serial nr.	**COM17279**	DEF			page	**56 of 110**

FOSBER S.p.A.
via Provinciale per Camaiore, 27/28 55060 Monsagrati (Lucca) - ITALIA
T. +39.0583.3891 - F. +39.0583.389205/385567
E-mail: info@fosber.it

TWIN 400 T.1

PAGINA LASCIATA VUOTA
PÁGINA DEJADA EN BLANCO

customer	**CORRUGADORA GUATEMA**	REL	**L.CENTI**	**28/06/17**	issued	**28/06/2017**
job nr.	**4607**	REV			proj. sect.	**=TW4+Q0**
serial nr.	**COM17279**	DEF			page	**57 of 110**

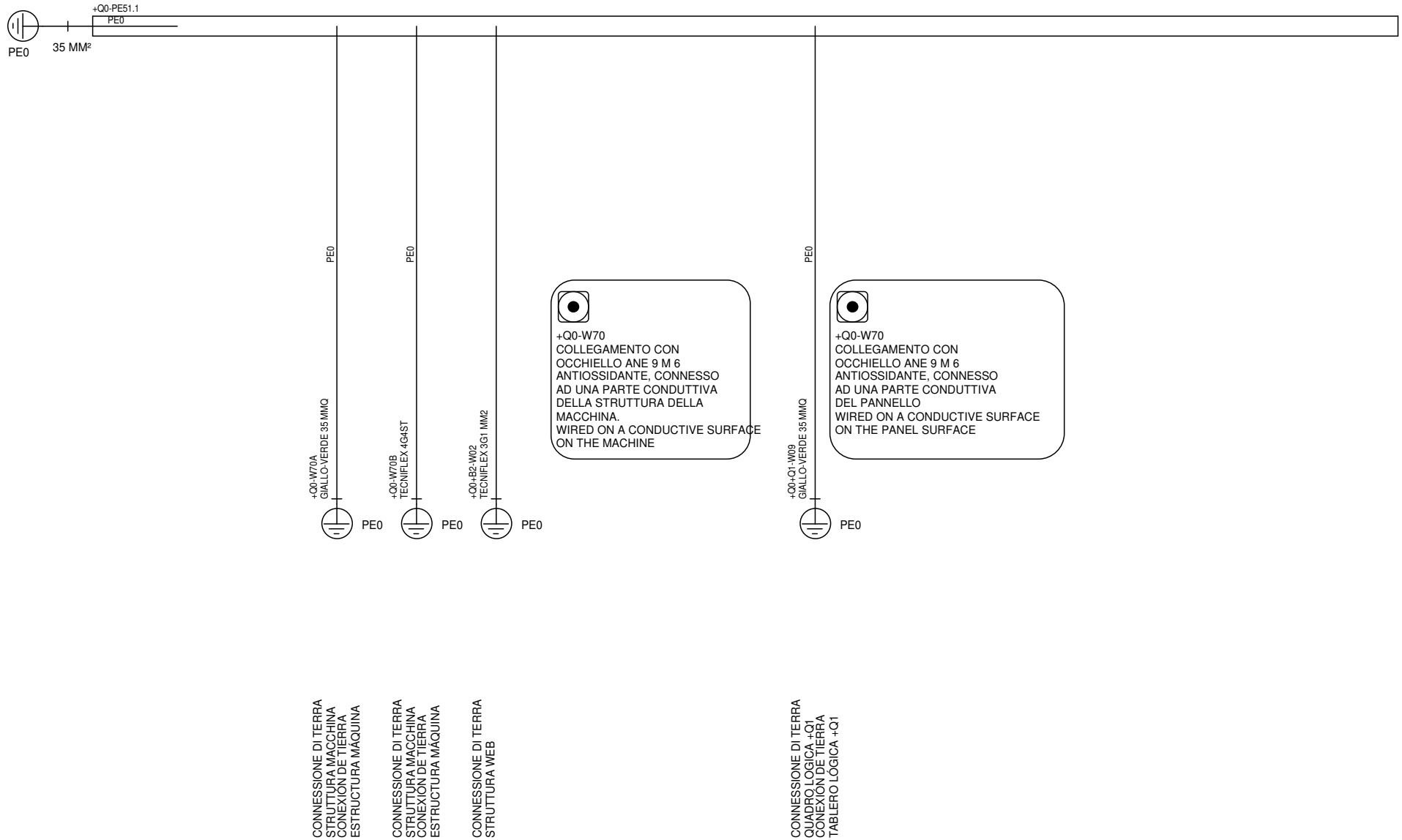

FOSBER S.p.A.
via Provinciale per Camaiore, 27/28 55060 Monsagrati (Lucca) - ITALIA
T. +39.0583.3891 - F. +39.0583.389205/385567
E-mail: info@fosber.it

TWIN 400 T.1
DISTRIBUZIONE TERRA MACCHINA
DISTRIBUCIÓN TIERRA MÁQUINA

customer	CORRUGADORA GUATEMA	REL	L.CENTI	28/06/17	issued	28/06/2017
job nr.	4607	REV			proj. sect.	=TW4+Q0
serial nr.	COM17279	DEF			page	58 of 110

LAY-OUT PIASTRA CENTRALE

MORSETTIERA "1"
TIPO MORSETTI ZDK 2,5
PONTICELLATI:
X0.0(5) X0.1(5) X0.2(5)
X0.3(4) X0.4(2) X0.5(2)

MORSETTIERA "2"
TIPO MORSETTI ZDU 2,5
XM:1(8 da 1 a 8)
XM:3(5 da 1 a 5)

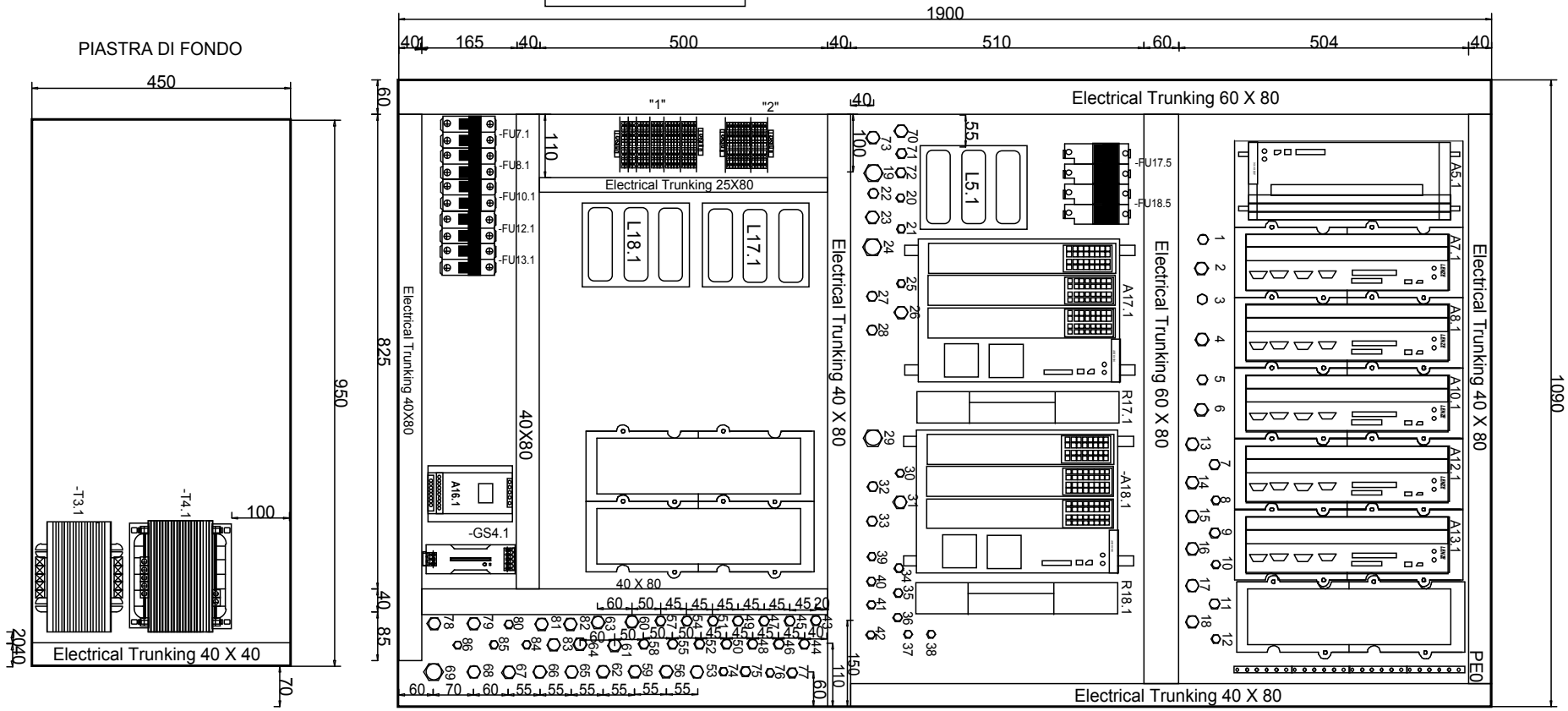

LISTA PRESSACAVI:
1:M16 +Q0-W04
2:M20 +Q0-W05
3:M16 +Q0-W06
4:M20 +Q0-W07
5:M16 +Q0-W10
6:M20 +Q0-W11
7:M16 +Q0-W15A
8:M12 +Q0-W15B
9:M16 +Q0-W17A
10:M12 +Q0-W17B
11:M16 +Q0-W19A
12:M12 +Q0-W19B
13:M20 +Q0-W14
14:M20 +Q0-W15
15:M20 +Q0-W16
16:M20 +Q0-W17
17:M20 +Q0-W18
18:M20 +Q0-W19
19:M32 +Q0-W26
20:M12 +Q0-W27
21:M16 +Q0-W21A
22:M12 +Q0-W26A
23:M20 +Q0-W26A
24:M32 +Q0-W22
25:M12 +Q0-W23
26:M25 +Q0-W22B
27:M16 +Q0-W22A
28:M16 +Q0-W22C
29:M32 +Q0-W24
30:M12 +Q0-W25
31:M25 +Q0-W24B
32:M16 +Q0-W24A
33:M16 +Q0-W24C
34:M12 +Q0-B0-W04
35:M12 +Q0-B0-W06
36:M12 +Q0-B0-W08
37:M12 +Q0-Q1-W07
38:M12 +Q1+Q0-W08
39:M12 +Q0+B0-W02
40:M12 +Q0+B0-W03
41:M12 +Q0+B0-W05
42:M12 +Q0+B0-W07
43:M16 FREE
44:M16 FREE
45:M16 FREE
46:M16 +Q0+Q1-W30
47:M16 +Q0+Q1-W04
48:M16 +Q0+C0-W00
49:M16 +Q0+W72
50:M16 +Q0+W70
51:M16 +Q0+B0-W10
52:M16 +Q0+B0-W00
53:M20 +Q0+W71
54:M16 +Q0+W47
55:M16 +Q0+Q1-W09
56:M20 +Q0+W30
57:M16 +Q0+W40
58:M16 +Q0+W26C
59:M20 +Q0+Q1-W05
60:M20 +Q0+W20
61:M25 +Q0+W26D
62:M20 +Q0+Q1-W03
63:M20 +Q0+W28
64:M20 +Q0+W29
65:M20 +Q0+Q1-W02
66:M20 +Q0+Q1-W01
67:M20 +B1+Q0-W00
68:M20 +Q0+Q1-W07A
69:M32 +Q0+Q1-W06
70:M25 +Q0+W26L
71:M16 CAN OPEN MOTEC
72:M16 CAN OPEN MOTEC
73:M20 +Q0-WM1
74:M12 +Q0-W27A
75:M16 +Q0-W56C
76:M12 +Q0-W57A
77:M16 +Q0-W56D
78:M20 +Q0-WM2
79:M20 +Q0-W56L
80:M12
81:M20
82:M20
83:M25
84:M12
85:M12
86:M12

Fosber	***FOSBER*** *S.p.A.* *via Provinciale per Camaiore, 27/28 55060 Monsagrati (Lucca) - ITALIA* *T. +39.0583.3891 - F. +39.0583.389205/385567* *E-mail: info@fosber.it*	***TWIN 400 T.1*** LAY - OUT PIASTRA CENTRALE LAY - OUT PLACA CENTRAL	*customer*	***CORRUGADORA GUATEMA***	*REL*	***L.CENTI***	***28/06/17***	*issued*	***28/06/2017***
			job nr.	***4607***	*REV*			*proj. sect.*	***=TW4+Q0***
			serial nr.	***COM17279***	*DEF*			*page*	***59 of 110***

LAY- OUT PIASTRA DESTRA

"A" (Relè Allen-Bradley):
+Q0-K4.1
+Q0-K12.1
+Q0-K13.1

+Q0-K16.1
+Q0-K20.1
+Q0-K20.2
+Q0-K20.3
+Q0-K26.1
+Q0-K28.1

+Q0-K35.1
+Q0-K35.2
+Q0-K35.3
+Q0-K36.1
+Q0-K36.2
+Q0-K36.3

+Q0-K40.1
+Q0-K40.2
+Q0-K40.3
+Q0-K41.1
+Q0-K42.1
+Q0-K42.2

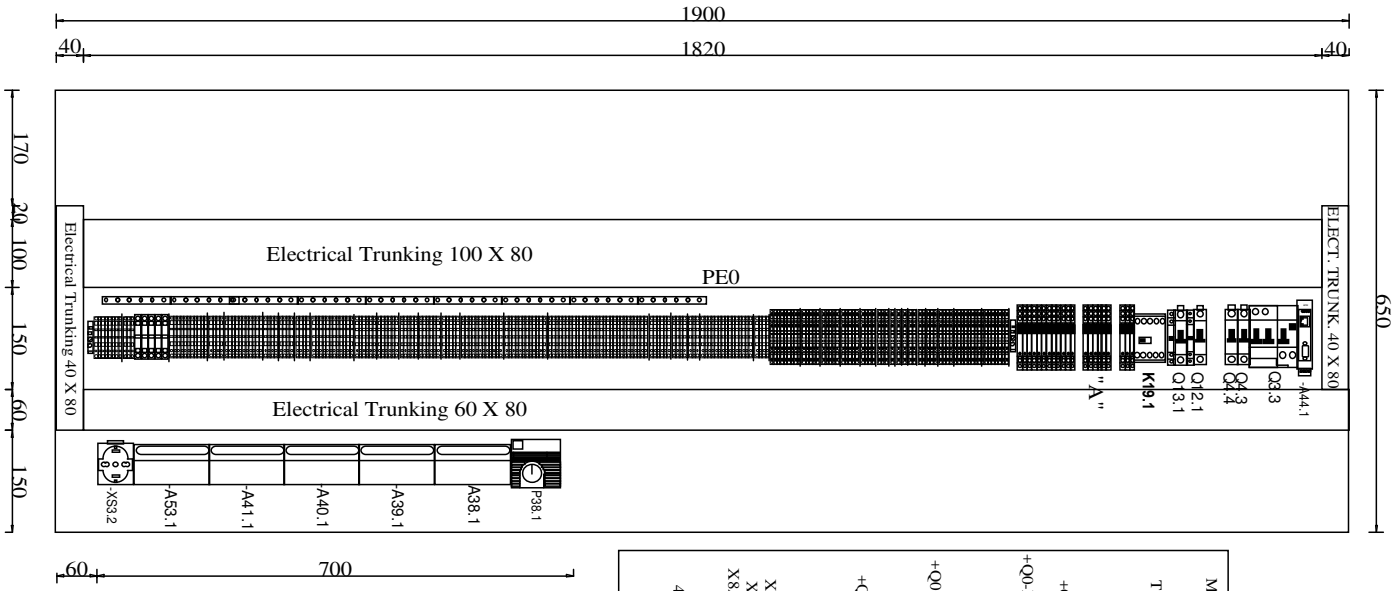

MORSETTIERA SU ISOLAT.M5
PARTENZA DALL'ALTO

TIPO ZDK 2,5 PONTICELLATI:
X0.0A (8); X0.1A (8)
X0.2A (4); X0.3A (3)
X0.4 (2); X0.5 (2)
DF1 (1); DF2 (1)
+Q0-XI(1);+Q0-XI(2);+Q0-XI(3)
+Q0-X19(4) ; +Q0-X31(5);
+Q0-X32(5) ; +Q0-X40(5) ;+Q0-X47 (9)

TIPO ZDU 2,5:
+Q0-X2 (4); +Q0-X3 (17)
+Q0-X4 (3); +Q0-X9 (4);
+Q0-X10 (6); +Q0-X11 (21+7 ZPE2,5)
+Q0-X12 (11+IZPE2,5);
+Q0-X13 (11+IZPE2,5)
+Q0-X14 (5);+Q0-X17 (8)
+Q0-X28 (4+IZPE) ;+Q0-X46 (6);
+Q0-XP(6)

MORSETTI ZDU 2,5:
X1(11+Izpe2,5)
X5(3 +Izpe2,5) X6(3 +Izpe2,5)
X7(3 +Izpe2,5) X8(8 +3zpe2,5)
X8A(3 +Izpe2,5) XA1(8 +3zpe2,5)

XM1:
4 ZDU4 + 1 ZPE4 + 3 ZDU 2,5
XM3:
7 ZDU 2,5 + 1 ZPE 2,5

FOSBER S.p.A.
via Provinciale per Camaiore, 27/28 55060 Monsagrati (Lucca) - ITALIA
T. +39.0583.3891 - F. +39.0583.389205/385567
E-mail: info@fosber.it

TWIN 400 T.1
LAY - OUT PIASTRA DESTRA
LAY - OUT PLACA DERECHA

customer	CORRUGADORA GUATEMA	REL	L.CENTI	28/06/17	issued	28/06/2017
job nr.	4607	REV			proj. sect.	=TW4+Q0
serial nr.	COM17279	DEF			page	60 of 110

LAY- OUT PIASTRA SINISTRA

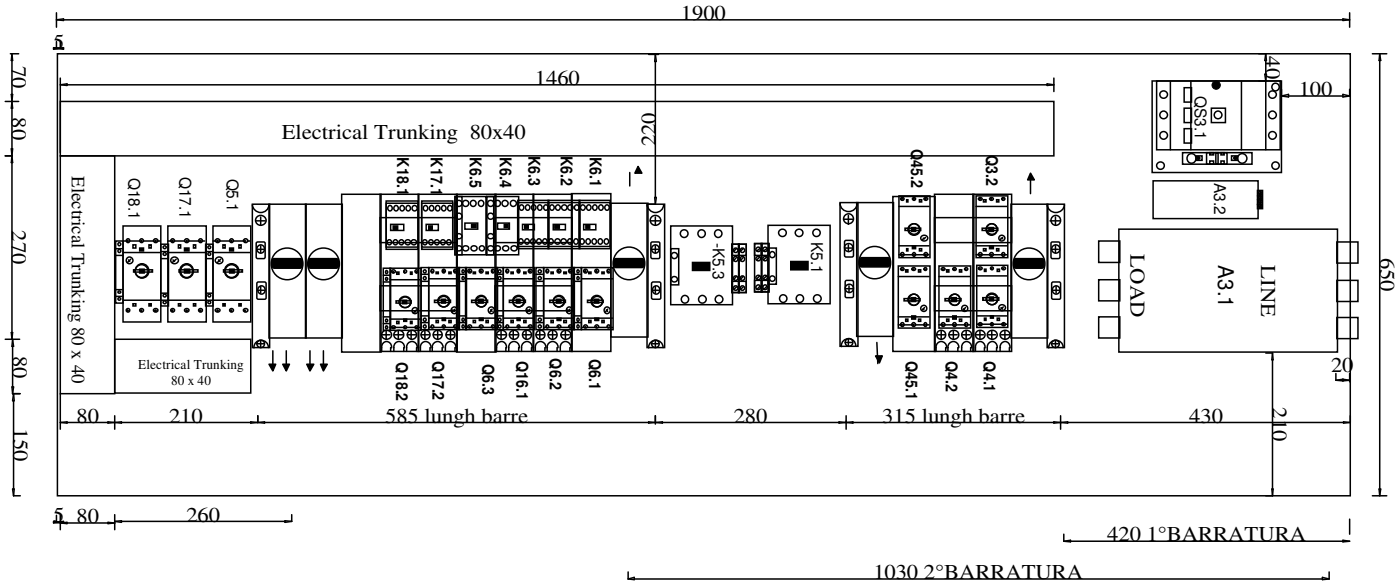

LAY- OUT PIASTRA POSTERIORE

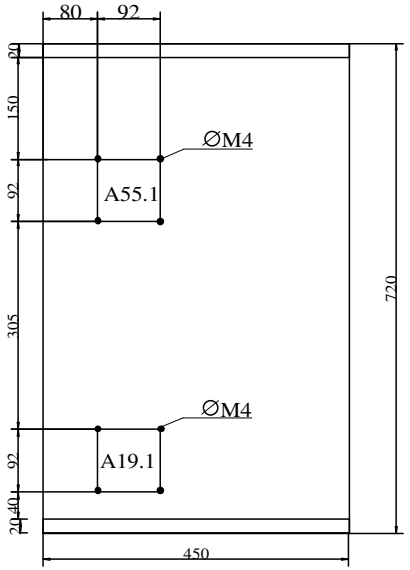

LAY- OUT PIASTRA RESISTENZE

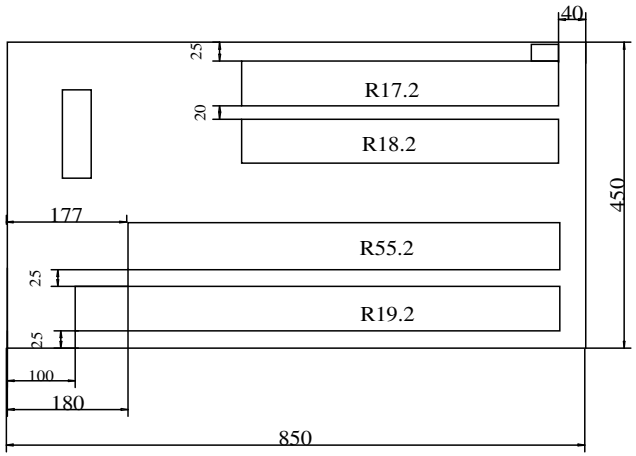

Fosber

FOSBER S.p.A.
via Provinciale per Camaiore, 27/28 55060 Monsagrati (Lucca) - ITALIA
T. +39.0583.3891 - F. +39.0583.389205/385567
E-mail: info@fosber.it

TWIN 400 T.1
LAY - OUT PIASTRA SINISTRA
LAY - OUT PLACA IZQUIERDA

customer	CORRUGADORA GUATEMA	REL	L.CENTI	28/06/17	issued	28/06/2017
job nr.	4607	REV			proj. sect.	=TW4+Q0
serial nr.	COM17279	DEF			page	61 of 110

FOSBER S.p.A.
via Provinciale per Camaiore, 27/28 55060 Monsagrati (Lucca) - ITALIA
T. +39.0583.3891 - F. +39.0583.389205/385567
E-mail: info@fosber.it

TWIN 400 T.1

PAGINA LASCIATA VUOTA
PÁGINA DEJADA EN BLANCO

customer	**CORRUGADORA GUATEMA**	REL	**L.CENTI**	**28/06/17**	issued	**28/06/2017**
job nr.	**4607**	REV			proj. sect.	**=TW4+Q0**
serial nr.	**COM17279**	DEF			page	**62 of 110**

FOSBER S.p.A.
via Provinciale per Camaiore, 27/28 55060 Monsagrati (Lucca) - ITALIA
T. +39.0583.3891 - F. +39.0583.389205/385567
E-mail: info@fosber.it

TWIN 400 T.1

PAGINA LASCIATA VUOTA
PAGINA DEJADA EN BLANCO

customer	**CORRUGADORA GUATEMA**	REL	**L.CENTI**	**28/06/17**	issued	**28/06/2017**
job nr.	**4607**	REV			proj. sect.	**=TW4+Q0**
serial nr.	**COM17279**	DEF			page	**63 of 110**

CABLAGGIO +Q0 TIPO A

COLLEGAMENTO EMETTITORE FOTOCELLULLA DI JAM UP

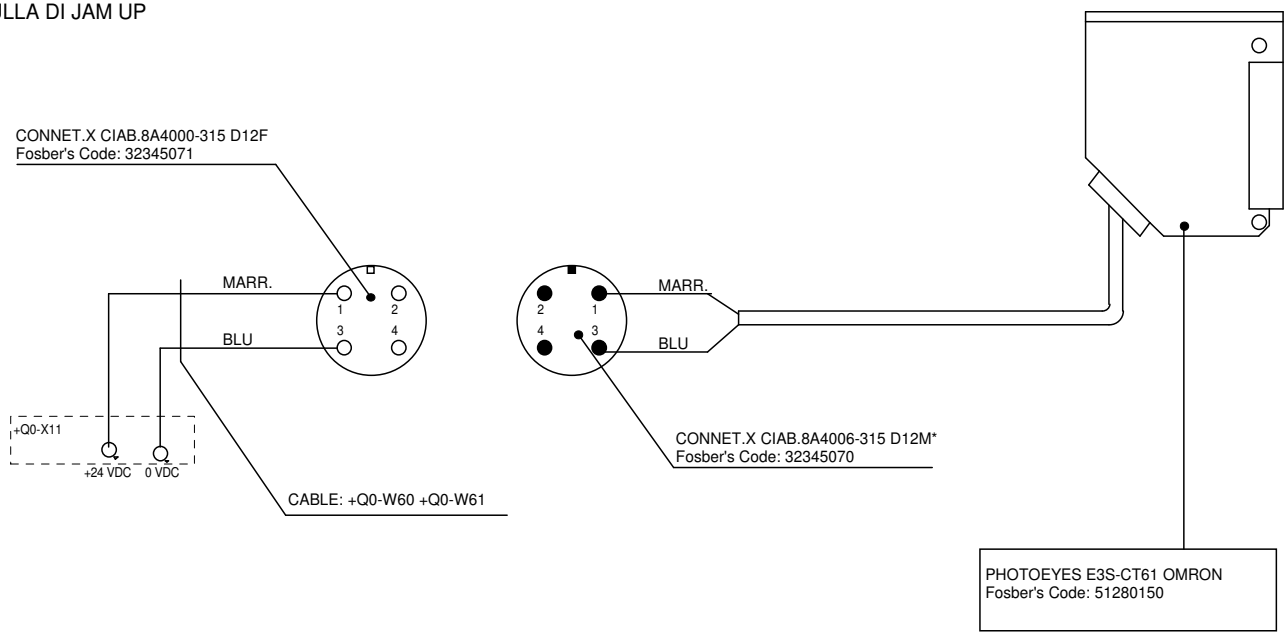

FOSBER S.p.A.
via Provinciale per Camaiore, 27/28 55060 Monsagrati (Lucca) - ITALIA
T. +39.0583.3891 - F. +39.0583.389205/385567
E-mail: info@fosber.it

TWIN 400 T.1
CABLAGGIO +Q0 TIPO A
CABLEADO +Q0 TIPO A

customer	CORRUGADORA GUATEMA	REL	L.CENTI	28/06/17	issued	28/06/2017
job nr.	4607	REV			proj. sect.	=TW4+Q0
serial nr.	COM17279	DEF			page	64 of 110

FOSBER S.p.A.
via Provinciale per Camaiore, 27/28 55060 Monsagrati (Lucca) - ITALIA
T. +39.0583.3891 - F. +39.0583.389205/385567
E-mail: info@fosber.it

TWIN 400 T.1
PROCARE

customer	**CORRUGADORA GUATEMA**	REL	**L.CENTI**	**28/06/17**	issued	**28/06/2017**
job nr.	**4607**	REV			proj. sect.	**=TW4+Q0**
serial nr.	**COM17279**	DEF			page	**65 of 110**

FOSBER S.p.A.
via Provinciale per Camaiore, 27/28 55060 Monsagrati (Lucca) - ITALIA
T. +39.0583.3891 - F. +39.0583.389205/385567
E-mail: info@fosber.it

TWIN 400 T.1
PROCARE

customer	**CORRUGADORA GUATEMA**	REL	**L.CENTI**	**28/06/17**	issued	**28/06/2017**
job nr.	**4607**	REV			proj. sect.	**=TW4+Q0**
serial nr.	**COM17279**	DEF			page	**67 of 110**

FOSBER S.p.A.
via Provinciale per Camaiore, 27/28 55060 Monsagrati (Lucca) - ITALIA
T. +39.0583.3891 - F. +39.0583.389205/385567
E-mail: info@fosber.it

TWIN 400 T.1
PROCARE

customer	**CORRUGADORA GUATEMA**	REL	**L.CENTI**	**28/06/17**	issued	**28/06/2017**
job nr.	**4607**	REV			proj. sect.	**=TW4+Q0**
serial nr.	**COM17279**	DEF			page	**70 of 110**

FOSBER S.p.A.
via Provinciale per Camaiore, 27/28 55060 Monsagrati (Lucca) - ITALIA
T. +39.0583.3891 - F. +39.0583.389205/385567
E-mail: info@fosber.it

TWIN 400 T.1
PROCARE

customer	**CORRUGADORA GUATEMA**	REL	**L.CENTI**	**28/06/17**	issued	**28/06/2017**
job nr.	**4607**	REV			proj. sect.	**=TW4+Q0**
serial nr.	**COM17279**	DEF			page	**71 of 110**

FOSBER S.p.A.
via Provinciale per Camaiore, 27/28 55060 Monsagrati (Lucca) - ITALIA
T. +39.0583.3891 - F. +39.0583.389205/385567
E-mail: info@fosber.it

TWIN 400 T.1
PROCARE

customer	**CORRUGADORA GUATEMA**	REL	**L.CENTI**	**28/06/17**	issued	**28/06/2017**
job nr.	**4607**	REV			proj. sect.	**=TW4+Q0**
serial nr.	**COM17279**	DEF			page	**72 of 110**

MAIN CABLING ON MACHINE CABINET =TW4 +Q0

Nr.	INITIALS	CODE	TYPE	∅ (mm)	LENGTH (mt)	DESCRIPTION	START	ARRIVAL	TERMINAL BOX
1	+Q0-W01	31051268	TECNIFLEX 4G2.5 MM2	10.6	7	MOTOR BLOW UP TO SCORES	+Q0	+Q0-M6.1	+Q0-X5
2	+Q0-W02	31051266	TECNIFLEX 4G1.5 MM2	8.9	10	MOTOR MOVE MACHINE (IF PRESENT E+L NOT NECESSARY)	+Q0	+Q0-M6.2	+Q0-X6
3	+Q0-W03	31051266	TECNIFLEX 4G1.5 MM2	8.9		MOTOR MOVEMENT TRIM CHUTES	+Q0	+Q0-M6.3	+Q0-X7
4	+Q0-W04	51060545	RESOLVER 15 MT CON*	8.3		RESOLVER MOTOR BLADE ROBOT	+Q0	+Q0-B7.1	DIRECTLY
5	+Q0-W05	51060539	MOTORE 15 MT CONN*	12.7		MOTOR BLADE ROBOT	+Q0	+Q0-M7.1	DIRECTLY
6	+Q0-W06	51060545	RESOLVER 15 MT CON*	8.3		RESOLVER SCORES UPPER ROBOT 1	+Q0	+Q0-B8.1	DIRECTLY
7	+Q0-W07	51060539	MOTORE 15 MT CONN*	12.7		MOTOR SCORES UPPER ROBOT 1	+Q0	+Q0-M8.1	DIRECTLY
8	+Q0-W08	51060545	RESOLVER 15 MT CON*	8.3		RESOLVER SCORES UPPER ROBOT 2	+Q0	+Q0-B9.1	DIRECTLY
9	+Q0-W09	51060539	MOTORE 15 MT CONN*	12.7		MOTOR SCORES UPPER ROBOT 2	+Q0	+Q0-M9.1	DIRECTLY
10	+Q0-W10	51060545	RESOLVER 15 MT CON*	8.3		RESOLVER SCORES LOWER ROBOT 1	+Q0	+Q0-B10.1	DIRECTLY
11	+Q0-W11	51060539	MOTORE 15 MT CONN*	12.7		MOTORE SCORES LOWER ROBOT 1	+Q0	+Q0-M10.1	DIRECTLY
12	+Q0-W12	51060545	RESOLVER 15 MT CON*	8.3		RESOLVER SCORES LOWER ROBOT 2	+Q0	+Q0-B11.1	DIRECTLY
13	+Q0-W13	51060539	MOTORE 15 MT CONN*	12.7		MOTORE SCORES LOWER ROBOT 2	+Q0	+Q0-M11.1	DIRECTLY
14	+Q0-W14	31050098	FFR(4(2X0.35)STR)STR	11.2	13	RESOLVER SHAFT 1 ROD MOTOR	+Q0	+Q0-B12.1	DIRECTLY
15	+Q0-W15	31050250	TECNIFLEX 4G1.5ST UNEL	9.2	13	MOTOR SHAFT 1 ROD	+Q0	+Q0-M12.1	DIRECTLY
16	+Q0-W15A	31051260	TECNIFLEX 3G1 MM2	6.2	13	BRAKE SHAFT 1 ROD MOTOR	+Q0	+Q0-Y12.1	DIRECTLY
17	+Q0-W15B	31050097	OR PMX-ST(2X0,34)	4.5	13	ROD 1 MOTOR THERMAL PLATE	+Q0	+Q0-ST12.2	DIRECTLY
18	+Q0-W16	31050098	FFR(4(2X0.35)STR)STR	11.2	13	RESOLVER SHAFT 2 ROD MOTOR	+Q0	+Q0-B13.1	DIRECTLY
19	+Q0-W17	31050250	TECNIFLEX 4G1.5ST UNEL	9.2	13	MOTOR SHAFT 2 ROD	+Q0	+Q0-M13.1	DIRECTLY
20	+Q0-W17A	31051260	TECNIFLEX 3G1 MM2	6.2	13	BRAKE SHAFT 2 ROD MOTOR	+Q0	+Q0-Y13.1	DIRECTLY
21	+Q0-W17B	31050097	OR PMX-ST(2X0,34)	4.5	13	ROD 2 MOTOR THERMAL PLATE	+Q0	+Q0-ST13.2	DIRECTLY
22									
23									
24									
25									
26									
27									
28									
29									
30									
31									
32	+Q0-W22	31050254	TECNIFLEX 4G10 ST	19,3	16	MOTOR ROTATION AXIS 1	+Q0	+Q0-M17.1	DIRECTLY
33	+Q0-W22A	31051266	TECNIFLEX 4G1.5 MM2	7.4	16	FAN MOTOR ROTATION AXIS 1	+Q0	+Q0-M17.2	+Q0-XA1
34	+Q0-W22B	31050253	TECNIFLEX 4G6 ST UNEL	11.2	16	BRAKE RESISTOR AXIS 1	+Q0	+Q0-R17.1	DIRECTLY
35	+Q0-W22C	31051260	TECNIFLEX 3G1 MM2	6.2	16	THERMAL CONTACT BRAKE RESISTOR 1	+Q0	+Q0-R17.2	+Q0-X17
36	+Q0-W23	31050097	OR PMX-ST(2X0,34)	4.5	16	THERMAL CONTACT MOTOR ROTATION 1	+Q0	+Q0-ST17.1	DIRECTLY

Fosber
FOSBER S.p.A.
via Provinciale per Camaiore, 27/28 55060 Monsagrati (Lucca) - ITALIA
T. +39.0583.3891 - F. +39.0583.389205/385567
E-mail: info@fosber.it

TWIN 400 T.1
COMPLESSIVO CAVI BORDO MACCHINA
CONJUNTO CABLES BORDO MAQUINA

customer	CORRUGADORA GUATEMA	REL	L.CENTI	28/06/17	issued	28/06/2017
job nr.	4607	REV			proj. sect.	=TW4+Q0
serial nr.	COM17279	DEF			page	73 of 110

MAIN CABLING ON MACHINE CABINET =TW4 +Q0

Nr.	INITIALS	CODE	TYPE	∅ (mm)	LENGTH (mt)	DESCRIPTION	START	ARRIVAL	TERMINAL BOX
36	+Q0-W24	31050254	TECNIFLEX 4G10 ST	19.3	16	MOTOR ROTATION AXIS 2	+Q0	+Q0-M17.3	DIRECTLY
37	+Q0-W24A	31051266	TECNIFLEX 4G1.5 MM2	7.4	16	FAN MOTOR ROTATION AXIS 2	+Q0	+Q0-M17.4	+Q0-XA1
38	+Q0-W24B	31050253	TECNIFLEX 4G6 ST UNEL	11.2	16	BRAKE RESISTOR AXIS 2	+Q0	+Q0-R17.3	DIRECTLY
39	+Q0-W24C	31051260	TECNIFLEX 3G1 MM2	6.2	16	THERMAL CONTACT BRAKE RESISTOR AXIS 2	+Q0	+Q0-R17.4	+Q0-X17
40	+Q0-W25	31050097	OR PMX-ST(2X0,34)	4.5	16	THERMAL CONTACT MOTOR ROTATION AXIS 2	+Q0	+Q0-ST17.2	DIRECTLY
41									
42	+Q0-W40	31050198	FR((3X2X0,14)+2X(0.50))	8.2		ENCODER MEASURE WHEEL	+Q0	+Q0-B27.1	+Q0-X47
43	+Q0-W47	50010666	CONNETTORE BTL6-R1162 10MT	6.2		TRIM CHUT SENSOR POSITION	+Q0	+Q0-R19.1	+Q0-X28
44									
45									
46									
47	+Q0-W65A	31050166	CEAM FRAF 4X0,5 sch	6	8	PHOTOEYES KNIFES ADJUSTEMENT AXIS 1 (RE)	+Q0	+Q0-XB46A	+Q0-X46
48	+Q0-W66A	31050166	CEAM FRAF 4X0,5 sch	6	8	PHOTOEYES KNIFES ADJUSTEMENT AXIS 2 (RE)	+Q0	+Q0-XB46B	+Q0-X46
49	+Q0-W70A +Q0-W70B	31050737	YELLOW/GREEN 35 MM²		7	COLLEGAMENTO DI TERRA	+Q0	STRUTTURA MACCHINA	DIRETTO
50	+Q0-W71	31050250	TECNIFLEX 4G1.5ST UNEL	9,2		MOTORE EDGE GUIDE	+Q0	+Q0-M16.1	DIRETTO
51									
52	+Q0-W80	31240642	CON.PROL.M23 BOX ESCHA 15MT		15	EDGE GUIDE CONNECTION	+Q0	+Q0-A51.1	+Q0-X12
53	+Q0-W81	31240642	CON.PROL.M23 BOX ESCHA 15MT		15	COLLEGAMENTO DI TERRA	+Q0	+Q0-A52.1	+Q0-X13
54									
55									
56									
57									
58									
59									
60									
61									
62									
63									
64									
65									
66									
67									
68									
69									
70									

Fosber
FOSBER S.p.A.
via Provinciale per Camaiore, 27/28 55060 Monsagrati (Lucca) - ITALIA
T. +39.0583.3891 - F. +39.0583.389205/385567
E-mail: info@fosber.it

TWIN 400 T.1
COMPLESSIVO CAVI BORDO MACCHINA
CONJUNTO CABLES BORDO MAQUINA

customer	CORRUGADORA GUATEMA	REL	L.CENTI	28/06/17	issued	28/06/2017
job nr.	4607	REV			proj. sect.	=TW4+Q0
serial nr.	COM17279	DEF			page	74 of 110

MAIN CONNECTION CABLING CABINET =TW4 +Q0

Nr.	INITIALS	CODE	TYPE	∅(mm)	LENGTH(mt)	DESCRIPTION	START	ARRIVAL	TERMINAL BOX	TYPE OF NET
1										
2										
3										
4										
5										
6										
7										
8										
9										
10										
1										
2										
3										
4										
5										
6										
7										
8										
9										
1										
1										
2										
1										
1										
2										
3										

Fosber
FOSBER S.p.A.
via Provinciale per Camaiore, 27/28 55060 Monsagrati (Lucca) - ITALIA
T. +39.0583.3891 - F. +39.0583.389205/385567
E-mail: info@fosber.it

TWIN 400 T.1
COMPLESSIVO CAVI BORDO MACCHINA
CONJUNTO CABLES BORDO MAQUINA

customer	CORRUGADORA GUATEMA	REL	L.CENTI	28/06/17	issued	28/06/2017
job nr.	4607	REV			proj. sect.	=TW4+Q0
serial nr.	COM17279	DEF			page	75 of 110

MAIN CONNECTION CABLING CABINET =TW4 +Q0

Nr.	INITIALS	CODE	TYPE	∅(mm)	LENGTH(mt)	DESCRIPTION	START	ARRIVAL	TERMINAL BOX	TYPE OF NET
						COMMUNICATION WITH +Q1				
1	+Q0+Q1-W01	31051268	CAVO TECNIFLEX 4G2.5 MM2	10.6		THREE PHASE POWER SUPPLY FOR LOGIC CABINET	+Q0	+Q1	+Q0-X1	POWER
2	+Q0+Q1-W02	31051268	CAVO TECNIFLEX 4G2.5 MM2	10.6		POWER SUPPLY 220 VAC LOGIC CABINET	+Q0	+Q1	+Q0-X1	POWER
3	+Q0+Q1-W03	31051268	CAVO TECNIFLEX 4G2.5 MM2	10.6		POWER SUPPLY 24 VDC	+Q0	+Q1	+Q0-X1	AUXILIARY POWER
4	+Q0+Q1-W05	31051272	CAVO TECNIFLEX 4G1.5 MM2	7.4		POWER SUPPLY 220 VAC DIFFERETIAL VOLTAGE	+Q0	+Q1	+Q0-X2	PLUG AND SERVICE LINE
5										
6	+Q0+Q1-W06	31051243	CAVO TECNIFLEX 18G1.5 MM2	14.3		INTERFACE WITH +Q1	+Q0	+Q1	+Q0-X3	SEGNALI DI COMUNICAZIONE
7	+Q0+Q1-W07A	31050198	FR((3X2X0,14)+2X(0.50))	8,6		ENCODER MEANSURE WHELL	+Q0	+Q1	+Q0-X47	RIFERIMENTO DI VELOCITA'
8	+Q1+Q0-W08	31050097	OR PMX-ST(2X0,34)	4.9		SPEED REFERENCE WITH +Q0	+Q1	+Q0	+Q0-X4	RIFERIMENTO DI VELOCITA'
9	+Q0+Q1-W09	31050737	YELLOW/GREEN 35 MM²			GROUND CONNECTION WITH +Q1	+Q0	+Q1	DIRETTO	RIFERIMENTO DI VELOCITA'
10	+Q0+Q1-W03A	31051268	CAVO TECNIFLEX 4G2.5 MM2	10.6		POWER SUPPLY 24 VDC FOR WEB DIRECTOR	+Q0	+Q1	+Q0-X1	AUXILIARY POWER
						COMMUNICATION WITH +B0				
1	+Q0+B0-W00	51294881	CAN OPEN (2X2X0,5)	7		CAN OPEN NETWORK +B0	+Q0	+B0-XB6.1	+Q0-X19	CAN OPEN NETWORK
2										
3										
4	+Q0+B0-W04	32345179	CAVO BG20004-M100X TW4	5		POWER SUPPLY CAN MODULE	+Q0	+B0-A6.1	+Q0-X11	POWER SUPPLY MODULE
5	+Q0+B0-W05	32345179	CAVO BG20004-M100X TW4	5		POWER SUPPLY CAN MODULE	+Q0	+B0-A10.1	+Q0-X11	POWER SUPPLY MODULE
6		32345179				POWER SUPPLY CAN MODULE				
7	+Q0+B0-W07	32345179	CAVO BG20004-M100X TW4	5		POWER SUPPLY CAN MODULE	+Q0	+B0-A14.1	+Q0-X11	POWER SUPPLY MODULE
8		32345179				POWER SUPPLY CAN MODULE				
9	+Q0+B0-W10	32345094	CAVO PRECABL. M12-LIBERO 15MT			SENSOR CONNECTION ROBOT BLADE	+Q0	+B0-A9.1	+Q0-X10	LOGIC SIGNAL
						COMMUNICATION WITH +Q0				
1	+Q1+Q0-W00	51294887	DEVICE NET TRUNK OR.FR	11		DEVICE NET NETWORK	+Q0	+Q1	+Q0-X31	DEVICE NETWORK
1										
2										
						COMMUNICATION WITH MODEM SERVICE				
1	+Q0+Q1-W30	31052086	(2X2XAWG24)SN/ST PVC ETH	8		CONNESSIONE ETHERNET	+Q0	+Q1	+Q0-A44.1	ETHERNET
						COMMUNICATION WITH +B2				
1	+Q0+B2-W00	51294885	DEVICE NET DROP OR.FR	7.20		RETE DEVICE NET PER WEB DIRECTOR	+Q0	+B2	+Q0-X32	DEVICE-NET NETWORK
2	+Q0+B2-W01	31051266	TECNIFLEX 4G1.5 MM2	6.60		POWER SUPPLY FOR WEB DIRECTOR	+Q0	+B2	+Q0-X1	AUXILIARY SIGNAL
3	+Q0+B2-W02	31050719	CORD.G/V 6 MMQ			COLLEGAMENTO DI TERRA WEB DIRECTOR	+Q0	STRUTTURA WEB	DIRETTO	TERRA WEB

Fosber
FOSBER S.p.A.
via Provinciale per Camaiore, 27/28 55060 Monsagrati (Lucca) - ITALIA
T. +39.0583.3891 - F. +39.0583.389205/385567
E-mail: info@fosber.it

TWIN 400 T.1
COMPLESSIVO CAVI DI CONNESSIONE
CONJUNTO CABLES DE CONEXIÓN

customer	CORRUGADORA GUATEMA	REL	L.CENTI	28/06/17	issued	28/06/2017
job nr.	4607	REV			proj. sect.	=TW4+Q0
serial nr.	COM17279	DEF			page	76 of 110

TERMINAL BOX, CONNECTOR

+Q0-X1

INSIDE CABINET COMPONENT	TERMINAL	NUMB.OF TERMINAL	NUMBER OF WIRE	OUTSIDE CABINET COMPONENT	TERMINAL	DESCRIPTION	CABLE	NUMBER, COLOR
+Q0-Q45.1	T1	1	R3	+Q1-X1	1	POWER SUPPLY LINE TO LOGICAL ELECTRICAL CABINET +Q1(R1)	+Q0+Q1-W01	1
+Q0-Q45.1	T2	2	S3	+Q1-X1	2	POWER SUPPLY LINE TO LOGICAL ELECTRICAL CABINET +Q1(S1)	+Q0+Q1-W01	2
+Q0-Q45.1	T3	3	T3	+Q1-X1	3	POWER SUPPLY LINE TO LOGICAL ELECTRICAL CABINET +Q1(T1)	+Q0+Q1-W01	3
+Q0-A3.1	PE	4	PE0	+Q1-X1	4	POWER SUPPLY LINE TO LOGICAL ELECTRICAL CABINET +Q1(PE)	+Q0+Q1-W01	Yellow/ Green
+Q0-Q45.2	T1	5	45.10	+Q1-X1	5	POWER SUPPLY LINE TO LOGICAL ELECTRICAL CABINET +Q1(X0.5)	+Q0+Q1-W02	1
+Q0-Q45.2	T2	6	45.12	+Q1-X1	6	POWER SUPPLY LINE TO LOGICAL ELECTRICAL CABINET +Q1(X0.4)	+Q0+Q1-W02	2
+Q0-K4.2	A2	7	X0.0A	+Q1-X1	7	0 VDC POWER SUPPLY AUXILIARIES	+Q0+Q1-W03	1
+Q0-M4.1	4	8	X0.1A	+Q1-X1	8	24 VDC POWER SUPPLY AUXILIARIES	+Q0+Q1-W03	2
+Q0-A5.1	E1	9	X0.3A	+Q1-X1	9	24 VDC POWER SUPPLY NULL SPEED	+Q0+Q1-W03	3
		10	45.26 (Q1-X0.12A)	+Q1-X1	10	AUXILIARY TENSION 24Vdc FOR WEB DIRECTOR	+Q0+Q1-W03A +Q0+B2-W01	1
		11	45.27	+Q1-X1	11	24 VDC POWER SUPPLY AUXILIARY LOGICAL WEB DIRECTOR	+Q0+Q1-W03A +Q0+B2-W01	2
		12	45.28 (Q1-X0.13A)	+Q1-X1	12	AUXILIARY TENSION 24Vdc FOR WEB DIRECTOR	+Q0+Q1-W03A +Q0+B2-W01	3

REL	L.CENTI	28/06/17	issued 28/06/2017
REV			proj. sect. =TW4+Q0
DEF			page 77 of 110

customer: CORRUGADORA GUATEMA
job nr.: 4607
serial nr.: COM17279

TWIN 400 T.1
MORSETTIERA +Q0-X1
BORNERA +Q0-X1

Fosber
FOSBER S.p.A.
via Provinciale per Camaiore, 27/28 55060 Monsagrati (Lucca) - ITALIA
T. +39.0583.3891 - F. +39.0583.389205/385567
E-mail: info@fosber.it

TERMINAL BOX, CONNECTOR

+Q0-X2

INSIDE CABINET COMPONENT	+Q0-XS3.2	+Q0-XS3.2
TERMINAL	1	2
NUMB.OF TERMINAL	1	2
NUMBER OF WIRE	DF1	DF2
OUTSIDE CABINET COMPONENT	+Q1-X2	+Q1-X2
TERMINAL	1	2
DESCRIPTION	220 Vac DIFFERENTIAL	0 VAC DIFFERENTIAL
CABLE	+Q0+Q1-W05	+Q0+Q1-W05
NUMBER, COLOR	1	2

Fosber

FOSBER S.p.A.
via Provinciale per Camaiore, 27/28 55060 Monsagrati (Lucca) - ITALIA
T. +39.0583.3891 - F. +39.0583.389205/385567
E-mail: info@fosber.it

TWIN 400 T.1
MORSETTIERA +Q0-X2
BORNERA +Q0-X2

customer	CORRUGADORA GUATEMA	REL	L.CENTI	28/06/17	issued	28/06/2017
job nr.	4607	REV			proj. sect.	=TW4+Q0
serial nr.	COM17279	DEF			page	78 of 110

TERMINAL BOX, CONNECTOR

+Q0-X3

INSIDE CABINET COMPONENT	TERMINAL	NUMB.OF TERMINAL	NUMBER OF WIRE	OUTSIDE CABINET COMPONENT	TERMINAL	DESCRIPTION	CABLE	NUMBER, COLOR
+Q0-K40.2	14	1	X0.2A	+Q1-X3	1	24 VDC POWER SUPPY (E-STOP CAT.0)	+Q0+Q1-W06	1
+Q0-SA3.1	4	2		+Q1-X3	2	AVAILABLE		
+Q0-K5.3	A1	3	5.10	+Q1-X3	9	REEL 1 CIRCUIT TRIPLE PHASE DISCONNECTION	+Q0+Q1-W06	3
+Q0-A7.1	E4	4	20.12	+Q1-X3	4	START ORDER CHANGE FROM AOC	+Q0+Q1-W06	4
+Q0-K5.1	A1	5	5.15	+Q1-X3	5	REEL 1 CIRCUIT TRIPLE PHASE DISCONNECTION	+Q0+Q1-W06	5
+Q0-X46	1	6	42.14	+Q1-X3	6	RECEIPT POWER SUPPLY TOOLS ADJUSTMENT PHOTOCELLS	+Q0+Q1-W06	6
+Q0-K5.3	22	8	5.13	+Q1-X3	8	CIRCUIT SERIES OF RESET	+Q0+Q1-W06	8
+Q0-K5.1	21	9	5.12	+Q1-X3	3	CIRCUIT SERIES OF RESET	+Q0+Q1-W06	9
+Q0-K5.1	21	10	5.16	+Q1-X3	10	COMMAND ELECTRO SAFETY LOCKS		
+Q0-K20.1	14	11	47.10	+Q1-X3	11	ORDER CHANGE FOR WEB DIRECTOR	+Q0+Q1-W06	11
+Q0-XIES	1	12	47.13	+Q1-X3	12	EMERGENCY CHANNEL A IES DISCONNECT	+Q0+Q1-W06	12
+Q0-XIES	1	13	47.13	+Q1-X3	13	EMERGENCY CHANNEL A IES DISCONNECT	+Q0+Q1-W06	13
+Q0-XIES	3	14	47.14	+Q1-X3	14	EMERGENCY CHANNEL B IES DISCONNECT	+Q0+Q1-W06	14
+Q0-XIES	3	15	47.14	+Q1-X3	15	EMERGENCY CHANNEL B IES DISCONNECT	+Q0+Q1-W06	15
+Q0-X11	9	16	43.10	+Q1-X3	16	24 VDC SOLENOID VALVE BLADES	+Q0+Q1-W06	16
		17						
		18						

REL	L.CENTI	28/06/17	issued 28/06/2017
REV			proj. sect. =TW4+Q0
DEF			page 79 of 110

customer: CORRUGADORA GUATEMA
job nr.: 4607
serial nr.: COM17279

TWIN 400 T.1
MORSETTIERA +Q0-X3
BORNERA +Q0-X3

Fosber
FOSBER S.p.A.
via Provinciale per Camaiore, 27/28 55060 Monsagrati (Lucca) - ITALIA
T. +39.0583.3891 - F. +39.0583.389205/385567
E-mail: info@fosber.it

TERMINAL BOX, CONNECTOR

+Q0-X4

INSIDE CABINET COMPONENT	TERMINAL	NUMB.OF TERMINAL	NUMBER OF WIRE	OUTSIDE CABINET COMPONENT	TERMINAL	DESCRIPTION	CABLE	NUMBER, COLOR
+Q0-A12.1	2	1	26.13	+Q1-X4	2	SPEED REFERENCE FROM AOC	+Q1+Q0-W08	RED
+Q0-A12.1	1	2	26.14	+Q1-X4	1	SPEED REFERENCE FROM AOC	+Q1+Q0-W08	WHITE
		3	Sch	+Q1-X4	3	SPEED REFERENCE FROM AOC		

FOSBER S.p.A.
via Provinciale per Camaiore, 27/28 55060 Monsagrati (Lucca) - ITALIA
T. +39.0583.3891 - F. +39.0583.389205/385567
E-mail: info@fosber.it

TWIN 400 T.1
MORSETTIERA +Q0-X4
BORNERA +Q0-X4

customer	CORRUGADORA GUATEMA	REL	L.CENTI	28/06/17	issued	28/06/2017
job nr.	4607	REV			proj. sect.	=TW4+Q0
serial nr.	COM17279	DEF			page	80 of 110

TERMINAL BOX, CONNECTOR

+Q0-X5

INSIDE CABINET COMPONENT	TERMINAL	NUMB.OF TERMINAL	NUMBER OF WIRE	OUTSIDE CABINET COMPONENT	TERMINAL	DESCRIPTION	CABLE	NUMBER, COLOR
+Q0-K6.1	2	1	6.11	+Q0-M6.1	U	POWER SUPPLY LINE SCORERS BLOW (R)	+Q0-W01	1
+Q0-K6.1	4	2	6.13	+Q0-M6.1	V	POWER SUPPLY LINE SCORERS BLOW (S)	+Q0-W01	2
+Q0-K6.1	6	3	6.15	+Q0-M6.1	W	POWER SUPPLY LINE SCORERS BLOW (T)	+Q0-W01	3
+Q0-A3.1	PE	4	PE0	+Q0-M6.1	PE	POWER SUPPLY LINE SCORERS BLOW (PE0)	+Q0-W01	Yellow/ Green

customer	CORRUGADORA GUATEMA	REL	L.CENTI	28/06/17
job nr.	4607	REV		
serial nr.	COM17279	DEF		

TWIN 400 T.1
MORSETTIERA +Q0-X5
BORNERA +Q0-X5

issued 28/06/2017
proj. sect. =TW4+Q0
page 81 of 110

Fosber
FOSBER S.p.A.
via Provinciale per Camaiore, 27/28 55060 Monsagrati (Lucca) - ITALIA
T. +39.0583.3891 - F. +39.0583.389205/385567
E-mail: info@fosber.it

TERMINAL BOX, CONNECTOR

+Q0-X6

INSIDE CABINET COMPONENT	TERMINAL	NUMB.OF TERMINAL	NUMBER OF WIRE	OUTSIDE CABINET COMPONENT	TERMINAL	DESCRIPTION	CABLE	NUMBER, COLOR
+Q0-K6.2	6	1	6.23	+Q0-M6.2	U	POWER SUPPLY LINE MACHINE SHIFTING (R)	+Q0-W02	1
+Q0-K6.2	4	2	6.21	+Q0-M6.2	V	POWER SUPPLY LINE MACHINE SHIFTING (S)	+Q0-W02	2
+Q0-K6.2	2	3	6.19	+Q0-M6.2	W	POWER SUPPLY LINE MACHINE SHIFTING (T)	+Q0-W02	3
+Q0-A3.1	PE	4	PE0	+Q0-M6.2	PE	POWER SUPPLY LINE MACHINE SHIFTING (PE0)	+Q0-W02	Yellow/ Green

FOSBER S.p.A.
via Provinciale per Camaiore, 27/28 55060 Monsagrati (Lucca) - ITALIA
T. +39.0583.3891 - F. +39.0583.389205/385567
E-mail: info@fosber.it

TWIN 400 T.1
MORSETTIERA +Q0-X6
BORNERA +Q0-X6

customer	CORRUGADORA GUATEMA	REL	L.CENTI	28/06/17	issued	28/06/2017
job nr.	4607	REV			proj. sect.	=TW4+Q0
serial nr.	COM17279	DEF			page	82 of 110

TERMINAL BOX, CONNECTOR

+Q0-X7

INSIDE CABINET COMPONENT	TERMINAL	NUMB.OF TERMINAL	NUMBER OF WIRE	OUTSIDE CABINET COMPONENT	TERMINAL	DESCRIPTION	CABLE	NUMBER, COLOR
+Q0-K6.3	6	1	6.30	+Q0-M6.3	U	POWER SUPPLY LINE TRIM CHUTES SHIFTING (R)	+Q0-W03	1
+Q0-K6.3	4	2	6.28	+Q0-M6.3	V	POWER SUPPLY LINE TRIM CHUTES SHIFTING (S)	+Q0-W03	2
+Q0-K6.3	2	3	6.26	+Q0-M6.3	W	POWER SUPPLY LINE TRIM CHUTES SHIFTING (T)	+Q0-W03	3
+Q0-A3.1	PE	4	PE0	+Q0-M6.3	PE	POWER SUPPLY LINE TRIM CHUTES SHIFTING (PE0)	+Q0-W03	Yellow/ Green

FOSBER S.p.A.
via Provinciale per Camaiore, 27/28 55060 Monsagrati (Lucca) - ITALIA
T. +39.0583.3891 - F. +39.0583.389205/385567
E-mail: info@fosber.it

TWIN 400 T.1
MORSETTIERA +Q0-X7
BORNERA +Q0-X7

customer	CORRUGADORA GUATEMA	REL	L.CENTI	28/06/17	issued	28/06/2017
job nr.	4607	REV			proj. sect.	=TW4+Q0
serial nr.	COM17279	DEF			page	83 of 110

TERMINAL BOX, CONNECTOR

+Q0-X8

INSIDE CABINET COMPONENT
TERMINAL
NUMB.OF TERMINAL
NUMBER OF WIRE
OUTSIDE CABINET COMPONENT
TERMINAL
DESCRIPTION
CABLE
NUMBER, COLOR

Fosber

FOSBER S.p.A.
via Provinciale per Camaiore, 27/28 55060 Monsagrati (Lucca) - ITALIA
T. +39.0583.3891 - F. +39.0583.389205/385567
E-mail: info@fosber.it

TWIN 400 T.1
MORSETTIERA +Q0-X8
BORNERA +Q0-X8

customer	CORRUGADORA GUATEMA	REL	L.CENTI	28/06/17	issued	28/06/2017
job nr.	4607	REV			proj. sect.	=TW4+Q0
serial nr.	COM17279	DEF			page	84 of 110

TERMINAL BOX, CONNECTOR

+Q0-X8A

INSIDE CABINET COMPONENT
TERMINAL
NUMB.OF TERMINAL
NUMBER OF WIRE
OUTSIDE CABINET COMPONENT
TERMINAL
DESCRIPTION
CABLE
NUMBER, COLOR

Fosber

FOSBER S.p.A.
via Provinciale per Camaiore, 27/28 55060 Monsagrati (Lucca) - ITALIA
T. +39.0583.3891 - F. +39.0583.389205/385567
E-mail: info@fosber.it

TWIN 400 T.1
MORSETTIERA +Q0-X8A
BORNERA +Q0-X8A

customer	CORRUGADORA GUATEMA	REL	L.CENTI	28/06/17	issued	28/06/2017
job nr.	4607	REV			proj. sect.	=TW4+Q0
serial nr.	COM17279	DEF			page	85 of 110

TERMINAL BOX, CONNECTOR

+Q0-X9

INSIDE CABINET COMPONENT
TERMINAL
NUMB.OF TERMINAL
NUMBER OF WIRE
OUTSIDE CABINET COMPONENT
TERMINAL
DESCRIPTION
CABLE
NUMBER, COLOR

Fosber

FOSBER S.p.A.
via Provinciale per Camaiore, 27/28 55060 Monsagrati (Lucca) - ITALIA
T. +39.0583.3891 - F. +39.0583.389205/385567
E-mail: info@fosber.it

TWIN 400 T.1
MORSETTIERA +Q0-X9
BORNERA +Q0-X9

customer	CORRUGADORA GUATEMA	REL	L.CENTI	28/06/17	issued	28/06/2017
job nr.	4607	REV			proj. sect.	=TW4+Q0
serial nr.	COM17279	DEF			page	86 of 110

TERMINAL BOX, CONNECTOR

+Q0-X10

INSIDE CABINET COMPONENT	TERMINAL	NUMB.OF TERMINAL	NUMBER OF WIRE	OUTSIDE CABINET COMPONENT	TERMINAL	DESCRIPTION	CABLE	NUMBER, COLOR
+Q0-K42.3	A1	1	42.10	+B0-A9.2	1	LEFT PHOTOCELL BLADE TOOLS DETECT AXIS 1	+Q0+B0-W10	WHITE
+Q0-K42.1	A1	2	42.12	+B0-A9.2	2	RIGHT PHOTOCELL AXIS 1 BLADE TOOLS DETECT	+Q0+B0-W10	BROWN
+Q0-K42.4	A1	3	42.11	+B0-A9.2	3	LEFT PHOTOCELL BLADE TOOLS DETECT AXIS 2	+Q0+B0-W10	Green
+Q0-K42.2	A1	4	42.13	+B0-A9.2	4	RIGHT PHOTOCELL AXIS 2 BLADE TOOLS DETECT	+Q0+B0-W10	Yellow
+Q0-M4.1	4	5	X0.1A	+B0-A9.2	5	+24 Vdc GENERAL POWER SUPPLY	+Q0+B0-W10	Grey
+Q0-K4.2	A2	6	X0.0A	+B0-A9.2	7	0 Vdc GENERAL POWER SUPPLY	+Q0+B0-W10	BLUE

customer	CORRUGADORA GUATEMA	REL	L.CENTI	28/06/17	issued	28/06/2017
job nr.	4607	REV			proj. sect.	=TW4+Q0
serial nr.	COM17279	DEF			page	87 of 110

TWIN 400 T.1
MORSETTIERA +Q0-X10
BORNERA +Q0-X10

FOSBER S.p.A.
via Provinciale per Camaiore, 27/28 55060 Monsagrati (Lucca) - ITALIA
T. +39.0583.3891 - F. +39.0583.389205/385567
E-mail: info@fosber.it

TERMINAL BOX, CONNECTOR

+Q0-X11

INSIDE CABINET COMPONENT	TERMINAL	NUMB.OF TERMINAL	NUMBER OF WIRE	OUTSIDE CABINET COMPONENT	TERMINAL	DESCRIPTION	CABLE	NUMBER, COLOR
+Q0-K4.2	A2	3	X0.0A			0 VDC FOR REMOTE MODULE SLITTERS ROBOT AXIS 1 COMMANDS	+Q0+B0-W02	BLUE
+Q0-M4.1	4	4	X0.1A			24 VDC (UB) FOR REMOTE MODULE SLITTERS AXIS 1 CONTROL	+Q0+B0-W02	BROWN
+Q0-X11	9	5	43.10			24 VDC (UL) FOR MODULE CONTROL SLITTERS ROBOT AXIS 1	+Q0+B0-W02	WHITE
+Q0-X11	10	6	EQP0			GND FOR REMOTE MODULE CONTROL SLITTERS ROBOT AXIS 1	+Q0+B0-W02	BLACK
+Q0-K4.2	A2	7	X0.0A			0 VDC FOR REMOTE MODULE SLITTERS ROBOT AXIS 2 COMMANDS	+Q0+B0-W03	BLUE
+Q0-M4.1	4	8	X0.1A			24 VDC (UB) FOR REMOTE MODULE SLITTERS AXIS 2 CONTROL	+Q0+B0-W03	BROWN
+Q0-X11	5	9	43.10			24 VDC (UL) FOR MODULE CONTROL SLITTERS ROBOT AXIS 2	+Q0+B0-W03	WHITE
+Q0-X11	6	10	EQP0			GND FOR REMOTE MODULE CONTROL SLITTERS ROBOT AXIS 2	+Q0+B0-W03	BLUE
+Q0-K4.2	A2	11	X0.0A			0 VDC FOR REMOTE MODULE SLITTERS ROBOT	+Q0+B0-W04	BLUE
+Q0-M4.1	4	12	X0.1A			24 VDC (UB) FOR REMOTE MODULE SLITTERS ROBOT	+Q0+B0-W04	BROWN
+Q0-A5.1	E1	13	X0.3A			24 VDC (UL) FOR REMOTE MODULE SLITTERS ROBOT	+Q0+B0-W04	WHITE
+Q0-X11	6	14	EQP0			GND FOR REMOTE MODULE SLITTERS ROBOT	+Q0+B0-W04	BLACK
+Q0-K4.2	A2	15	X0.0A			0 VDC FOR REMOTE MODULE SLITTERS ROBOT	+Q0+B0-W05	BLUE
+Q0-M4.1	4	16	X0.1A			24 VDC (UB) FOR MODULE SLITTERS ROBOT	+Q0+B0-W05	BROWN
+Q0-A5.1	E1	17	X0.3A			24 VDC (UL) FOR MODULE SLITTERS ROBOT	+Q0+B0-W05	WHITE
+Q0-X11	6	18	EQP0			GND FOR REMOTE MODULE SLITTERS ROBOT	+Q0+B0-W05	BLACK
+Q0-K4.2	A2	19	X0.0A			0 VDC FOR REMOTE MODULE UPPER SCORERS ROBOT 2	+Q0+B0-W06	BLUE
+Q0-M4.1	4	20	X0.1A			24 VDC (UL) FOR MODULE UPPER SCORERS ROBOT 2	+Q0+B0-W06	BROWN
+Q0-A5.1	E1	21	X0.3A			24 VDC (UB) FOR MODULE UPPER SCORERS ROBOT 2	+Q0+B0-W06	WHITE
+Q0-X11	6	22	EQP0			GND FOR REMOTE MODULE UPPER SCORES ROBOT 1	+Q0+B0-W06	BLACK
+Q0-K4.2	A2	23	X0.0A			0 VDC FOR REMOTE MODULE LOWER SCORERS ROBOT 1	+Q0+B0-W07	BLUE
+Q0-M4.1	4	24	X0.1A			24 VDC (UL) FOR MODULE LOWER SCORERS ROBOT 1	+Q0+B0-W07	BROWN
+Q0-A5.1	E1	25	X0.3A			24 VDC (UB) FOR MODULE LOWER SCORERS ROBOT 1	+Q0+B0-W07	WHITE
+Q0-X11	6	26	EQP0			GND FOR REMOTE MODULE LOWER SCORES ROBOT 1	+Q0+B0-W07	BLACK
+Q0-K4.2	A2	27	X0.0A			0 VDC FOR REMOTE MODULE LOWER SCORERS ROBOT 2	+Q0+B0-W08	BLUE
+Q0-M4.1	4	28	X0.1A			24 VDC (UL) FOR MODULE LOWER SCORERS ROBOT 2	+Q0+B0-W08	BROWN

REL	L.CENTI	28/06/17	issued 28/06/2017
REV			proj. sect. =TW4+Q0
DEF			page 88 of 110

customer: CORRUGADORA GUATEMA
job nr.: 4607
serial nr.: COM17279

TWIN 400 T.1
MORSETTIERA +Q0-X11
BORNIERA +Q0-X11

Fosber
FOSBER S.p.A.
via Provinciale per Camaiore, 27/28 55060 Monsagrati (Lucca) - ITALIA
T. +39.0583.3891 - F. +39.0583.389205/385567
E-mail: info@fosber.it

TERMINAL BOX, CONNECTOR

+Q0-X11

INSIDE CABINET COMPONENT	+Q0-A5.1	+Q0-X11																									
TERMINAL	E1	6																									
NUMB.OF TERMINAL	29	30																									
NUMBER OF WIRE	X0.3A	EQP0																									
OUTSIDE CABINET COMPONENT																											
TERMINAL																											
DESCRIPTION	24 VDC (UB) FOR MODULE LOWER SCORERS ROBOT 2	GND FOR REMOTE MODULE LOWER SCORES ROBOT 2																									
CABLE	+Q0+B0-W08	+Q0+B0-W08																									
NUMBER, COLOR	WHITE	BLACK																									

Fosber

FOSBER S.p.A.
via Provinciale per Camaiore, 27/28 55060 Monsagrati (Lucca) - ITALIA
T. +39.0583.3891 - F. +39.0583.389205/385567
E-mail: info@fosber.it

TWIN 400 T.1
MORSETTIERA +Q0-X11
BORNERA +Q0-X11

customer	CORRUGADORA GUATEMA	REL	L.CENTI	28/06/17	issued	28/06/2017
job nr.	4607	REV			proj. sect.	=TW4+Q0
serial nr.	COM17279	DEF			page	89 of 110

TERMINAL BOX, CONNECTOR

+Q0-X12

INSIDE CABINET COMPONENT	TERMINAL	NUMB.OF TERMINAL	NUMBER OF WIRE	OUTSIDE CABINET COMPONENT	TERMINAL	DESCRIPTION	CABLE	NUMBER, COLOR
+Q0-A12.1	E1	1	26.10	+Q0-A51.1	PIN 1	MINIMUN LIMIT AXIS 1 SCORE	+Q0-W80	WH
+Q0-A12.1	E2	2	26.11	+Q0-A51.1	PIN 2	UPPER LIMIT AXIS 1 ROD	+Q0-W80	GN
+Q0-A13.1	E1	3	28.10	+Q0-A51.1	PIN 3	MINIMUM LIMIT AXIS 2 SCORE	+Q0-W80	YW
+Q0-A13.1	E2	4	28.11	+Q0-A51.1	PIN 4	MAXIMUM LIMIT AXIS 2 SCORE	+Q0-W80	GY
+Q0-A14.1	E1	5		+Q0-A51.1	PIN 5	MAXIMUN LIMIT AUX. AXIS SCORE	+Q0-W80	PK
+Q0-A14.1	E2	6		+Q0-A51.1	PIN 6	UPPER LIMIT AUX. AXIS ROD	+Q0-W80	RD
+Q0-A53.1	IN0	7	51.10	+Q0-A51.1	PIN 7	MAXIMUM SHIFTING RIGHT MACHINE	+Q0-W80	BK
+Q0-A53.1	IN1	8	51.11	+Q0-A51.1	PIN 8	MAXIMUM SHIFTING LEFT MACHINE	+Q0-W80	VT
+Q0-K4.2	A2	9	X0.0A	+Q0-A51.1	0 Vdc	AUXILIARY POWER SUPPLY 0 Vdc GENERAL	+Q0-W80	BU
+Q0-M4.1	4	10	X0.1A	+Q0-A51.1	+24 Vdc	AUXILIARY POWER SUPPLY +24 Vdc GENERAL	+Q0-W80	BN
+Q0-A3.1	PE	11	PE0	+Q0-A51.1	PE	PROTECTION CONDUCTORS	+Q0-W80	YW/GN

customer	CORRUGADORA GUATEMA	REL	L.CENTI	28/06/17
job nr.	4607	REV	issued	28/06/2017
serial nr.	COM17279	DEF	proj. sect.	=TW4+Q0
			page	90 of 110

TWIN 400 T.1
MORSETTIERA +Q0-X12
BORNIERA +Q0-X12

Fosber
FOSBER S.p.A.
via Provinciale per Camaiore, 27/28 55060 Monsagrati (Lucca) - ITALIA
T. +39.0583.3891 - F. +39.0583.389205/385567
E-mail: info@fosber.it

TERMINAL BOX, CONNECTOR

+Q0-X13

INSIDE CABINET COMPONENT	TERMINAL	NUMB.OF TERMINAL	NUMBER OF WIRE	OUTSIDE CABINET COMPONENT	TERMINAL	DESCRIPTION	CABLE	NUMBER, COLOR
		1		+Q0-A52.1	PIN 1		+Q0-W81	WH
		2		+Q0-A52.1	PIN 2		+Q0-W81	GN
		3		+Q0-A52.1	PIN 3		+Q0-W81	YW
		4		+Q0-A52.1	PIN 4		+Q0-W81	GY
		5		+Q0-A52.1	PIN 5		+Q0-W81	PK
		6		+Q0-A52.1	PIN 6	AUXILIARY AXIS ROD	+Q0-W81	RD
+Q0-K4.2	A2	9	X0.0A	+Q0-A52.1	0 Vdc	AUXILIARY POWER SUPPLY 0 Vdc GENERAL	+Q0-W81	BU
+Q0-M4.1	4	10	X0.1A	+Q0-A52.1	+24 Vdc	AUXILIARY POWER SUPPLY +24 Vdc GENERAL	+Q0-W81	BN
+Q0-A3.1	PE	11	PE0	+Q0-A52.1	PE	PROTECTION CONDUCTORS	+Q0-W81	YW/GN

customer	CORRUGADORA GUATEMA	REL	L.CENTI	28/06/17
job nr.	4607	REV	
serial nr.	COM17279	DEF	

issued 28/06/2017
proj. sect. =TW4+Q0
page 91 of 110

TWIN 400 T.1
MORSETTIERA +Q0-X13
BORNIERA +Q0-X13

Fosber
FOSBER S.p.A.
via Provinciale per Camaiore, 27/28 55060 Monsagrati (Lucca) - ITALIA
T. +39.0583.3891 - F. +39.0583.389205/385567
E-mail: info@fosber.it

TERMINAL BOX, CONNECTOR

+Q0-X14

INSIDE CABINET COMPONENT	TERMINAL	NUMB.OF TERMINAL	NUMBER OF WIRE	OUTSIDE CABINET COMPONENT	TERMINAL	DESCRIPTION	CABLE	NUMBER, COLOR
+Q0-K4.2	A2	1	X0.0A	+Q0-H41.1	8	0 VDC LAMP ALLARM	+Q0-W30	1
+Q0-A41.1	OUT4	2	41.14	+Q0-H41.1	1	ALARM SIGNALING	+Q0-W30	2
+Q0-A41.1	OUT5	3	41.15	+Q0-H41.2	2	SIGNALLING OF ROBOT IN MOVEMENT	+Q0-W30	3
+Q0-A41.1	OUT6	4	41.16	+Q0-H41.3	3	SIGNALING FOR MACHINE OKAY	+Q0-W30	4
+Q0-A41.1	OUT7	5	41.17	+Q0-HA41.1	6	ACOUSTIC WARNING SIGNALLING	+Q0-W30	5

FOSBER S.p.A.
via Provinciale per Camaiore, 27/28 55060 Monsagrati (Lucca) - ITALIA
T. +39.0583.3891 - F. +39.0583.389205/385567
E-mail: info@fosber.it

TWIN 400 T.1
MORSETTIERA +Q0-X14
BORNERA +Q0-X14

customer	CORRUGADORA GUATEMA	REL	L.CENTI	28/06/17	issued	28/06/2017
job nr.	4607	REV			proj. sect.	=TW4+Q0
serial nr.	COM17279	DEF			page	92 of 110

TERMINAL BOX, CONNECTOR

+Q0-X17

INSIDE CABINET COMPONENT	TERMINAL	NUMB.OF TERMINAL	NUMBER OF WIRE	OUTSIDE CABINET COMPONENT	TERMINAL	DESCRIPTION	CABLE	NUMBER, COLOR
+Q0-R17.2	1	1	X0.1A	+Q0-M4.1	4	FAULT CONTACT BRAKE RESISTOR AXIS 1	+Q0-W22C	1
+Q0-R17.2	2	2	17.26	+Q0-X17	3	FAULT CONTACT BRAKE RESISTOR AXIS 1	+Q0-W22C	2
+Q0-R18.2	1	3	17.26	+Q0-X17	2	FAULT CONTACT BRAKE RESISTOR AXIS 2	+Q0-W24C	1
+Q0-R18.2	2	4	18.26	+Q0-X17	5	CONTATTO DI FAULT RESISTENZA DI FRENATURA ASSE 2	+Q0-W24C	2

FOSBER S.p.A.
via Provinciale per Camaiore, 27/28 55060 Monsagrati (Lucca) - ITALIA
T. +39.0583.3891 - F. +39.0583.389205/385567
E-mail: info@fosber.it

TWIN 400 T.1
MORSETTIERA +Q0-X17
BORNERA +Q0-X17

customer	CORRUGADORA GUATEMA	REL	L.CENTI	28/06/17	issued	28/06/2017
job nr.	4607	REV			proj. sect.	=TW4+Q0
serial nr.	COM17279	DEF			page	93 of 110

TERMINAL BOX, CONNECTOR

+Q0-X19

INSIDE CABINET COMPONENT	TERMINAL	NUMB.OF TERMINAL	NUMBER OF WIRE	OUTSIDE CABINET COMPONENT	TERMINAL	DESCRIPTION	CABLE	NUMBER, COLOR
+Q0-A7.1	HI	1	HI			[CAN HI] CAN OPEN NETWORK REMOTE MODULES	+Q0+B0-W00	Yellow
+Q0-A7.1	LO	2	LO			[CAN LO] CAN OPEN NETWORK REMOTE MODULES	+Q0+B0-W00	Green
+Q0-A7.1	GND	3	GND			[GND] CAN OPEN NETWORK REMOTE MODULES	+Q0+B0-W00	Wh/Br
+Q0-A7.1	Sch	4	Sch			[SCH] CAN OPEN NETWORK REMOTE MODULES	+Q0+B0-W00	bare

FOSBER S.p.A.
via Provinciale per Camaiore, 27/28 55060 Monsagrati (Lucca) - ITALIA
T. +39.0583.3891 - F. +39.0583.389205/385567
E-mail: info@fosber.it

TWIN 400 T.1
MORSETTIERA +Q0-X19
BORNERA +Q0-X19

customer	CORRUGADORA GUATEMA	REL	L.CENTI	28/06/17	issued	28/06/2017
job nr.	4607	REV			proj. sect.	=TW4+Q0
serial nr.	COM17279	DEF			page	94 of 110

TERMINAL BOX, CONNECTOR

+Q0-X28

INSIDE CABINET COMPONENT	TERMINAL	NUMB.OF TERMINAL	NUMBER OF WIRE	OUTSIDE CABINET COMPONENT	TERMINAL	DESCRIPTION	CABLE	NUMBER, COLOR
+Q0-A7.1	1	1	20.19	+Q0-R20.2	GN	POSITION REFERENCE TRIM CHUTES	+Q0-W47	Green
+Q0-A7.1	2	2	20.20	+Q0-R20.2	GY	0 VDC REFERENCE TRIM CHUTES POSITION	+Q0-W47	Grey
+Q0-M4.1	4	3	X0.1A	+Q0-R20.2	BN	24 VDC TRANSDICER TRIM CHUTES POSITION	+Q0-W47	Brwon
+Q0-K4.2	A2	4	X0.0A	+Q0-R20.2	BU	0 VDC TRANSDICER TRIM CHUTES POSITION	+Q0-W47	BLUE
		5	PE0	+Q0-R20.2	PE	PE0 TRANSDUCER OF TRIM CHUTES POSITION	+Q0-W47	Yellow

REL	L.CENTI	28/06/17	issued 28/06/2017
REV			proj. sect. =TW4+Q0
DEF			page 95 of 110

customer: CORRUGADORA GUATEMA
job nr.: 4607
serial nr.: COM17279

TWIN 400 T.1
MORSETTIERA +Q0-X28
BORNERA +Q0-X28

Fosber
FOSBER S.p.A.
via Provinciale per Camaiore, 27/28 55060 Monsagrati (Lucca) - ITALIA
T. +39.0583.3891 - F. +39.0583.389205/385567
E-mail: info@fosber.it

TERMINAL BOX, CONNECTOR

+Q0-X31

INSIDE CABINET COMPONENT	TERMINAL	NUMB.OF TERMINAL	NUMBER OF WIRE	OUTSIDE CABINET COMPONENT	TERMINAL	DESCRIPTION	CABLE	NUMBER, COLOR
+Q0-A20.1	Black	1	V-	+Q1-X31	1	DEVICE NET FROM (+Q1)	+Q1+Q0-W00	Black
+Q0-A20.1	RED	2	V+	+Q1-X31	2	DEVICE NET FROM (+Q1)	+Q1+Q0-W00	RED
+Q0-A20.1	BLUE	3	CAN L	+Q1-X31	3	DEVICE NET FROM (+Q1)	+Q1+Q0-W00	BLUE
+Q0-A20.1	WHITE	4	CAN H	+Q1-X31	4	DEVICE NET FROM (+Q1)	+Q1+Q0-W00	WHITE
+Q0-A20.1	bare	5	DRAIN	+Q1-X31	5	DEVICE NET FROM (+Q1)	+Q1+Q0-W00	Bare

FOSBER S.p.A.
via Provinciale per Camaiore, 27/28 55060 Monsagrati (Lucca) - ITALIA
T. +39.0583.3891 - F. +39.0583.389205/385567
E-mail: info@fosber.it

TWIN 400 T.1
MORSETTIERA +Q0-X31
BORNERA +Q0-X31

customer	CORRUGADORA GUATEMA	REL	L.CENTI	28/06/17	issued	28/06/2017
job nr.	4607	REV			proj. sect.	=TW4+Q0
serial nr.	COM17279	DEF			page	96 of 110

TERMINAL BOX, CONNECTOR

+Q0-X32

INSIDE CABINET COMPONENT	TERMINAL	NUMB.OF TERMINAL	NUMBER OF WIRE	OUTSIDE CABINET COMPONENT	TERMINAL	DESCRIPTION	CABLE	NUMBER, COLOR
+Q0-A53.1	Black	1	V-			NET DEVICE FOR WEB DIRECTOR (+B2)	+Q0+B2-W00	Black
+Q0-A53.1	RED	2	V+			NET DEVICE FOR WEB DIRECTOR (+B2)	+Q0+B2-W00	RED
+Q0-A53.1	BLUE	3	CAN L			NET DEVICE FOR WEB DIRECTOR (+B2)	+Q0+B2-W00	BLUE
+Q0-A53.1	WHITE	4	CAN H			NET DEVICE FOR WEB DIRECTOR (+B2)	+Q0+B2-W00	WHITE
+Q0-A53.1	bare	5	DRAIN			NET DEVICE FOR WEB DIRECTOR (+B2)	+Q0+B2-W00	drain

REL	L.CENTI	28/06/17	issued 28/06/2017
REV			proj. sect. =TW4+Q0
DEF			page 97 of 110

customer: CORRUGADORA GUATEMA
job nr.: 4607
serial nr.: COM17279

TWIN 400 T.1
MORSETTIERA +Q0-X32
BORNERA +Q0-X32

Fosber
FOSBER S.p.A.
via Provinciale per Camaiore, 27/28 55060 Monsagrati (Lucca) - ITALIA
T. +39.0583.3891 - F. +39.0583.389205/385567
E-mail: info@fosber.it

TERMINAL BOX, CONNECTOR

+Q0-X40

INSIDE CABINET COMPONENT	TERMINAL	NUMB.OF TERMINAL	NUMBER OF WIRE	OUTSIDE CABINET COMPONENT	TERMINAL	DESCRIPTION	CABLE	NUMBER, COLOR
+Q0-A20.1	Black	1	V-			NET DEVICE FOR OUTLET CONSOLE (+C0)	+Q0+C0-W00	Black
+Q0-A20.1	RED	2	V+			NET DEVICE FOR OUTLET CONSOLE (+C0)	+Q0+C0-W00	RED
+Q0-A20.1	BLUE	3	CAN L			NET DEVICE FOR OUTLET CONSOLE (+C0)	+Q0+C0-W00	BLUE
+Q0-A20.1	WHITE	4	CAN H			NET DEVICE FOR OUTLET CONSOLE (+C0)	+Q0+C0-W00	WHITE
+Q0-A20.1	bare	5	DRAIN			NET DEVICE FOR OUTLET CONSOLE (+C0)	+Q0+C0-W00	Bare

customer	CORRUGADORA GUATEMA	REL	L.CENTI	28/06/17
job nr.	4607	REV	
serial nr.	COM17279	DEF	

issued 28/06/2017
proj. sect. =TW4+Q0
page 98 of 110

TWIN 400 T.1
MORSETTIERA +Q0-X40
BORNERA +Q0-X40

Fosber
FOSBER S.p.A.
via Provinciale per Camaiore, 27/28 55060 Monsagrati (Lucca) - ITALIA
T. +39.0583.3891 - F. +39.0583.389205/385567
E-mail: info@fosber.it

TERMINAL BOX, CONNECTOR

+Q0-X46

INSIDE CABINET COMPONENT	TERMINAL	NUMB.OF TERMINAL	NUMBER OF WIRE	OUTSIDE CABINET COMPONENT	TERMINAL	DESCRIPTION	CABLE	NUMBER, COLOR
+Q0-X46	4	1	42.14	+Q0-XB46A.1	1	PHOTOCELL RECEIVER AXIS 1 TOOLS ADJUSTMENT	+Q0-W65A	BROWN
+Q0-K4.2	A2	2	X0.0A	+Q0-XB46A.2	1	PHOTOCELL RECEIVER AXIS 1 TOOLS ADJUSTMENT	+Q0-W65A	WHITE
+Q0-A39.1	IN8	3	39.18	+Q0-XB46A.3	1	PHOTOCELL RECEIVER AXIS 1 TOOLS ADJUSTMENT	+Q0-W65A	Green
+Q0-X46	1	4	42.14	+Q0-XB46B.1	1	PHOTOCELL RECEIVER AXIS 2 TOOLS ADJUSTMENT	+Q0-W66A	BROWN
+Q0-K4.2	A2	5	X0.0A	+Q0-XB46B.2	1	PHOTOCELL RECEIVER AXIS 2 TOOLS ADJUSTMENT	+Q0-W66A	WHITE
+Q0-A39.1	IN9	6	39.19	+Q0-XB46B.3	1	PHOTOCELL RECEIVER AXIS 2 TOOLS ADJUSTMENT	+Q0-W66A	Green

customer	CORRUGADORA GUATEMA	REL	L.CENTI	28/06/17
job nr.	4607	REV	issued	28/06/2017
serial nr.	COM17279	DEF	proj. sect.	=TW4+Q0
			page	99 of 110

TWIN 400 T.1
MORSETTIERA +Q0-X46
BORNERA +Q0-X46

Fosber
FOSBER S.p.A.
via Provinciale per Camaiore, 27/28 55060 Monsagrati (Lucca) - ITALIA
T. +39.0583.3891 - F. +39.0583.389205/385567
E-mail: info@fosber.it

TERMINAL BOX, CONNECTOR

+Q0-X47

INSIDE CABINET COMPONENT	TERMINAL	NUMB.OF TERMINAL	NUMBER OF WIRE	OUTSIDE CABINET COMPONENT	TERMINAL	DESCRIPTION	CABLE	NUMBER, COLOR
+Q0-A12.1	2	1	27.10	+Q0-B27.1	6	MEASURING WHEEL ENCODER	+Q0-W40	Green
+Q0-A12.1	3	2	27.11	+Q0-B27.1	5	MEASURING WHEEL ENCODER	+Q0-W40	Yellow
+Q0-A12.1	9	3	27.12	+Q0-B27.1	1	MEASURING WHEEL ENCODER	+Q0-W40	Pink
+Q0-A12.1	1	4	27.13	+Q0-B27.1	8	MEASURING WHEEL ENCODER	+Q0-W40	Gray
+Q0-A12.1	6	5	27.14	+Q0-B27.1	4	MEASURING WHEEL ENCODER	+Q0-W40	Blue
+Q0-A12.1	7	6	27.15	+Q0-B27.1	3	MEASURING WHEEL ENCODER	+Q0-W40	Red
+Q0-A12.1	4	7	27.17	+Q0-B27.1	12	MEASURING WHEEL ENCODER	+Q0-W40	White
+Q0-A12.1	5	8	27.16	+Q0-B27.1	10	MEASURING WHEEL ENCODER	+Q0-W40	Brown
+Q0-A12.1	Case	9	Sch	+Q0-B27.1	Sch	MEASURING WHEEL ENCODER	+Q0-W40	Shield

customer	CORRUGADORA GUATEMA	REL	L.CENTI	28/06/17	issued	28/06/2017
job nr.	4607	REV			proj. sect.	=TW4+Q0
serial nr.	COM17279	DEF			page	100 of 110

TWIN 400 T.1
MORSETTIERA +Q0-X47
BORNERA +Q0-X47

FOSBER S.p.A.
via Provinciale per Camaiore, 27/28 55060 Monsagrati (Lucca) - ITALIA
T. +39.0583.3891 - F. +39.0583.389205/385567
E-mail: info@fosber.it

TERMINAL BOX, CONNECTOR

+Q0-XA1

INSIDE CABINET COMPONENT	TERMINAL	NUMB.OF TERMINAL	NUMBER OF WIRE	OUTSIDE CABINET COMPONENT	TERMINAL	DESCRIPTION	CABLE	NUMBER, COLOR
+Q0-K17.1	2	1	17.30	+Q0-M17.2	U	SERVO-FAN AXIS 1 MOTOR (R)	+Q0-W22A	1
+Q0-K17.1	4	2	17.32	+Q0-M17.2	V	SERVO-FAN AXIS 1 MOTOR (S)	+Q0-W22A	2
+Q0-K17.1	6	3	17.34	+Q0-M17.2	W	SERVO-FAN AXIS 1 MOTOR (T)	+Q0-W22A	3
+Q0-A3.1	PE	4	PE0	+Q0-M17.2	PE	SERVO-FAN AXIS 1 MOTOR (PE0)	+Q0-W22A	Y/G
+Q0-K18.1	2	5	18.30	+Q0-M18.2	U	SERVO-FAN AXIS 2 MOTOR (R)	+Q0-W24A	1
+Q0-K18.1	4	6	18.32	+Q0-M18.2	V	SERVO-FAN AXIS 2 MOTOR (S)	+Q0-W24A	2
+Q0-K18.1	6	7	18.34	+Q0-M18.2	W	SERVO-FAN AXIS 2 MOTOR (T)	+Q0-W24A	3
+Q0-A3.1	PE	8	PE0	+Q0-M18.2	PE	SERVO-FAN AXIS 2 MOTOR (T)	+Q0-W24A	Y/G
+Q0-K19.1	2	9	19.34	+Q0-M19.2	F		+Q0-W26A	BROWN
+Q0-K19.1	4	10	19.35	+Q0-M19.2	C		+Q0-W26A	BLUE

customer	CORRUGADORA GUATEMA	REL	L.CENTI	28/06/17
job nr.	4607	REV		
serial nr.	COM17279	DEF		

TWIN 400 T.1
MORSETTIERA +Q0-XA1
BORNIERA +Q0-XA1

issued	28/06/2017
proj. sect.	=TW4+Q0
page	101 of 110

Fosber
FOSBER S.p.A.
via Provinciale per Camaiore, 27/28 55060 Monsagrati (Lucca) - ITALIA
T. +39.0583.3891 - F. +39.0583.389205/385567
E-mail: info@fosber.it

TERMINAL BOX, CONNECTOR

+Q0-XIES

INSIDE CABINET COMPONENT
TERMINAL
NUMB.OF TERMINAL
NUMBER OF WIRE
OUTSIDE CABINET COMPONENT
TERMINAL
DESCRIPTION
CABLE
NUMBER, COLOR

Fosber

FOSBER S.p.A.
via Provinciale per Camaiore, 27/28 55060 Monsagrati (Lucca) - ITALIA
T. +39.0583.3891 - F. +39.0583.389205/385567
E-mail: info@fosber.it

TWIN 400 T.1
MORSETTIERA +Q0-XIES
BORNERA +Q0-XIES

customer	CORRUGADORA GUATEMA	REL	L.CENTI	28/06/17	issued	28/06/2017
job nr.	4607	REV			proj. sect.	=TW4+Q0
serial nr.	COM17279	DEF			page	102 of 110

TERMINAL BOX, CONNECTOR

+Q0-XP

INSIDE CABINET COMPONENT	TERMINAL	NUMB.OF TERMINAL	NUMBER OF WIRE	OUTSIDE CABINET COMPONENT	TERMINAL	DESCRIPTION	CABLE	NUMBER, COLOR
-V12.1	-	1	12.17	+Q0-Y12.1	Y1 (+)	AXIS 1 ROD BRAKE	+Q0-W15A	1
+Q0-GS4.1		2	4.22	+Q0-Y12.1	Y2 (-)	AXIS 1 ROD BRAKE	+Q0-W15A	2
-V13.1	-	3	13.17	+Q0-Y13.1	Y1 (+)	AXIS 2 ROD BRAKE	+Q0-W17A	1
+Q0-GS4.1		4	4.22	+Q0-Y13.1	Y2 (-)	AXIS 2 ROD BRAKE	+Q0-W17A	2
-V14.1	-	5	14.17	+Q0-Y14.1	Y1 (+)	AUX.AXIS ROD BRAKE	+Q0-W19A	1
+Q0-GS4.1		6	4.22	+Q0-Y14.1	Y2 (-)	AUX.AXIS ROD BRAKE	+Q0-W19A	2

FOSBER S.p.A.
via Provinciale per Camaiore, 27/28 55060 Monsagrati (Lucca) - ITALIA
T. +39.0583.3891 - F. +39.0583.389205/385567
E-mail: info@fosber.it

TWIN 400 T.1
MORSETTIERA +Q0-XP
BORNERA +Q0-XP

customer	CORRUGADORA GUATEMA	REL	L.CENTI	28/06/17	issued	28/06/2017
job nr.	4607	REV			proj. sect.	=TW4+Q0
serial nr.	COM17279	DEF			page	103 of 110

TERMINAL BOX, CONNECTOR

+Q0-XI

INSIDE CABINET COMPONENT	TERMINAL	NUMB.OF TERMINAL	NUMBER OF WIRE	OUTSIDE CABINET COMPONENT	TERMINAL	DESCRIPTION	CABLE	NUMBER, COLOR
+Q0-SA38.1	2	1	3.24	+Q0-EL3.1	1	CABINET LIGHTING		
+Q0-+Q4.4	2	2	4.21			SCORE SHAFT BRAKE POWER SUPPLY		
+Q0-GS4.1		3	4.22			SCORE SHAFT BRAKE POWER SUPPLY		
+Q0-A7.1	E4	4	20.12			START CAMBIO ORDINE AOC		
+Q0-A7.1	ENABLE 28	5	20.17			ABILITAZIONE INVERTER		

Fosber

FOSBER S.p.A.
via Provinciale per Camaiore, 27/28 55060 Monsagrati (Lucca) - ITALIA
T. +39.0583.3891 - F. +39.0583.389205/385567
E-mail: info@fosber.it

TWIN 400 T.1
MORSETTIERA +Q0-XI
BORNERA +Q0-XI

customer	CORRUGADORA GUATEMA	REL	L.CENTI	28/06/17	issued	28/06/2017
job nr.	4607	REV			proj. sect.	=TW4+Q0
serial nr.	COM17279	DEF			page	104 of 110

TERMINAL BOX, CONNECTOR

+Q0-XM1

INSIDE CABINET COMPONENT	TERMINAL	NUMB.OF TERMINAL	NUMBER OF WIRE	OUTSIDE CABINET COMPONENT	TERMINAL	DESCRIPTION	CABLE	NUMBER, COLOR
+Q0-A40.1	OUT14	1	37.10	+Q0-A19.2	DI1	RUN/STOP INVERTER AUX. AXIS ROLL	+Q0-WM1	1
+Q0-A40.1	OUT15	2	37.11	+Q0-A19.2	DI2	JOG INVERTER AUX. AXIS ROLL	+Q0-WM1	2
+Q0-K40.2	14	3	X0.2A	+Q0-A19.2	DI5	QUICK STOP	+Q0-WM1	3
+Q0-K37.10	A1	4	37.15	+Q0-A19.2	DO1	TRIP ACTIVE	+Q0-WM1	4
+Q0-A5.1	E1	5	X0.3A	+Q0-A19.2	RFR	ENABLE DRIVE	+Q0-WM1	5
		6						
		7						
+Q0-K4.2	A2	8	X0.0A	+Q0-A19.2	GND	0 VDC POWER SUPPLY AUXILIARIES	+Q0-WM1	8
+Q0-A19.1	U	9	19.25	+Q0-M19.1	U	MOTORE ROTAZIONE ASSE AUSILIARIO	+Q0-W26 +Q0-W26D	1
+Q0-A19.1	V	10	19.26	+Q0-M19.1	V	MOTORE ROTAZIONE ASSE AUSILIARIO	+Q0-W26 +Q0-W26D	2
+Q0-A19.1	W	11	19.27	+Q0-M19.1	W	MOTORE ROTAZIONE ASSE AUSILIARIO	+Q0-W26 +Q0-W26D	3
+Q0-A19.1	PE	12	PE0	+Q0-M19.1	PE	MOTORE ROTAZIONE ASSE AUSILIARIO	+Q0-W26 +Q0-W26D	Y/G
		13				MOTORE ROTAZIONE ASSE AUSILIARIO	+Q0-W26 +Q0-W26D	SCH
+Q0-A19.1		14		+Q0-ST19.1		PASTICCA TERMICA MOTORE	+Q0-W27 +Q0-W27A	RED
+Q0-A19.1	T1	15	19.31	+Q0-ST19.1	S1	PASTICCA TERMICA MOTORE	+Q0-W27 +Q0-W27A	WHITE
+Q0-A19.1	T2	16	19.32	+Q0-ST19.1	S2	PASTICCA TERMICA MOTORE	+Q0-W27 +Q0-W27A	SCH

REL	L.CENTI	28/06/17	issued 28/06/2017
REV			proj. sect. =TW4+Q0
DEF			page 105 of 110

customer: CORRUGADORA GUATEMA
job nr.: 4607
serial nr.: COM17279

TWIN 400 T.1
MORSETTIERA +Q0-XM1
TABLERO DE BORNES +Q0-XM1

Fosber
FOSBER S.p.A.
via Provinciale per Camaiore, 27/28 55060 Monsagrati (Lucca) - ITALIA
T. +39.0583.3891 - F. +39.0583.389205/385567
E-mail: info@fosber.it

TERMINAL BOX, CONNECTOR

+Q0-XM2

INSIDE CABINET COMPONENT
TERMINAL
NUMB.OF TERMINAL
NUMBER OF WIRE
OUTSIDE CABINET COMPONENT
TERMINAL
DESCRIPTION
CABLE
NUMBER, COLOR

Fosber

FOSBER S.p.A.
via Provinciale per Camaiore, 27/28 55060 Monsagrati (Lucca) - ITALIA
T. +39.0583.3891 - F. +39.0583.389205/385567
E-mail: info@fosber.it

TWIN 400 T.1
MORSETTIERA +Q0-XM2
TABLERO DE BORNES +Q0-XM2

customer	CORRUGADORA GUATEMA	REL	L.CENTI	28/06/17	issued	28/06/2017
job nr.	4607	REV			proj. sect.	=TW4+Q0
serial nr.	COM17279	DEF			page	106 of 110

TERMINAL BOX, CONNECTOR

+Q0-XM3

INSIDE CABINET COMPONENT	TERMINAL	NUMB.OF TERMINAL	NUMBER OF WIRE	OUTSIDE CABINET COMPONENT	TERMINAL	DESCRIPTION	CABLE	NUMBER, COLOR
+Q0-A41.1	OUT1	1	41.11	+Q0-A55.1	DI1	RUN/STOP INVERTER MOTORIZED ROLL	+Q0-WM2	1
+Q0-K40.2	14	2	X0.2A	+Q0-A55.1	DI5	QUICK STOP	+Q0-WM2	2
+Q0-K56.10	A1	3	56.11	+Q0-A55.1	DO1	TRIP ACTIVE	+Q0-WM2	3
+Q0-A5.1	E1	4	X0.3A	+Q0-A55.1	RFR	ENABLE DRIVE	+Q0-WM2	4
+Q0-K4.2	A2	5	X0.0A	+Q0-A55.1	GND	0 VDC POWER SUPPLY AUXILIARIES	+Q0-WM2	7
+Q0-A55.1	U	6	55.12	+Q0-M55.1	U	MOTORE RULLO MOTORIZZATO	+Q0-W56 +Q0-W56D	1
+Q0-A55.1	V	7	55.13	+Q0-M55.1	V	MOTORE RULLO MOTORIZZATO	+Q0-W56 +Q0-W56D	2
+Q0-A55.1	W	8	55.14	+Q0-M55.1	W	MOTORE RULLO MOTORIZZATO	+Q0-W56 +Q0-W56D	3
+Q0-A55.1	PE	9	PE	+Q0-M55.1	PE	MOTORE RULLO MOTORIZZATO	+Q0-W56 +Q0-W56D	Y/G
		10				MOTORE RULLO MOTORIZZATO	+Q0-W56 +Q0-W56D	SCH
		11				PASTICCA TERMICA MOTORE	+Q0-W57A	SCH
+Q0-A55.1	T1	12	55.15	+Q0-ST55.1	S1	PASTICCA TERMICA MOTORE	+Q0-W57 +Q0-W57A	RED
+Q0-A55.1	T2	13	55.16	+Q0-ST55.1	S2	PASTICCA TERMICA MOTORE	+Q0-W57 +Q0-W57A	WHITE

REL	L.CENTI	28/06/17	issued 28/06/2017
REV			proj. sect. =TW4+Q0
DEF			page 107 of 110

customer: CORRUGADORA GUATEMA
job nr.: 4607
serial nr.: COM17279

TWIN 400 T.1
MORSETTIERA +Q0-XM3
TABLERO DE BORNES +Q0-XM3

Fosber
FOSBER S.p.A.
via Provinciale per Camaiore, 27/28 55060 Monsagrati (Lucca) - ITALIA
T. +39.0583.3891 - F. +39.0583.389205/385567
E-mail: info@fosber.it

TERMINAL BOX, CONNECTOR

+Q0-XM4

INSIDE CABINET COMPONENT
TERMINAL
NUMB.OF TERMINAL
NUMBER OF WIRE
OUTSIDE CABINET COMPONENT
TERMINAL
DESCRIPTION
CABLE
NUMBER, COLOR

Fosber

FOSBER S.p.A.
via Provinciale per Camaiore, 27/28 55060 Monsagrati (Lucca) - ITALIA
T. +39.0583.3891 - F. +39.0583.389205/385567
E-mail: info@fosber.it

TWIN 400 T.1
MORSETTIERA +Q0-XM4
TABLERO DE BORNES +Q0-XM4

customer	CORRUGADORA GUATEMA	REL	L.CENTI	28/06/17	issued	28/06/2017
job nr.	4607	REV			proj. sect.	=TW4+Q0
serial nr.	COM17279	DEF			page	108 of 110

1	SEZIONE SCHEMA ELETTRICO	35	INVERTER ROTAZIONE ASSE 1	69	MORSETTIERA +Q0-X2
2	PAGINA LASCIATA VUOTA	36	INVERTER ROTAZIONE ASSE 2	70	MORSETTIERA +Q0-X3
3	INGRESSO ALIMENTAZIONE DI LINEA	37	INVERTER ROTAZIONE ASSE AUSILIARIO	71	MORSETTIERA +Q0-X4
4	ALIMENTAZIONE AUSILIARI	38	I/O DIAGNOSTICA QUADRO NODO 18	72	MORSETTIERA +Q0-X5
5	CIRCUITI DI POTENZA E DC BUS	39	I/O COMANDO ASSI	73	MORSETTIERA +Q0-X6
6	MOTORI SOFFI E SPOST. MACCHINA	40	I/O COMANDI INTERNO QUADRO	74	MORSETTIERA +Q0-X7
7	INVERTER ROBOT COLTELLI	41	I/O DI COMANDO INVERTER	75	MORSETTIERA +Q0-X8
8	INVERTER ROBOT 1 CORDONI SUPERIORE	42	RILEVAMENTO UTENSILI	76	MORSETTIERA +Q0-X8A
9	INVERTER ROBOT 2 CORDONI SUPERIORE	43	ALIMENTAZIONE MODULI REMOTI	77	MORSETTIERA +Q0-X9
10	INVERTER ROBOT 1 CORDONI INFERIORE	44	RETE CAN OPEN	78	MORSETTIERA +Q0-X10
11	INVERTER ROBOT 2 CORDONI INFERIORE	45	ALIMENTAZIONE PER +Q1	79	MORSETTIERA +Q0-X11
12	INVERTER BIELLA ASSE 1	46	INTERFACCIA +Q1 1/2	80	MORSETTIERA +Q0-X11
13	INVERTER BIELLA ASSE 2	47	INTERFACCIA +Q1 2/2	81	MORSETTIERA +Q0-X12
14	INVERTER BIELLA ASSE AUSILIARIO	48	RIFERIMENTI VELOCITA IN	82	MORSETTIERA +Q0-X13
15	INVERTER BOCCHETTE CONTINUOS TRIM	49	PAGINA VUOTA	83	MORSETTIERA +Q0-X14
16	INVERTER EDGE GUIDE	50	RETE DEVICE NET DA +Q1	84	MORSETTIERA +Q0-X17
17	INVERTER ROTAZIONE ASSE 1	51	MORSETTIERA PASSIVA -XP1	85	MORSETTIERA +Q0-X19
18	INVERTER ROTAZIONE ASSE 2	52	MORSETTIERA PASSIVA -XP2	86	MORSETTIERA +Q0-X28
19	INVERTER ROTAZIONE ASSE AUSILIARIO	53	I/O BORDO MACCHINA	87	MORSETTIERA +Q0-X31
20	LOGICA INVERTER COLTELLI	54	PAGINA LASCIATA VUOTA	88	MORSETTIERA +Q0-X32
21	X9-X10 INVERTER ROBOT COLTELLI	55	INVERTER RULLO MOTORIZZATO	89	MORSETTIERA +Q0-X40
22	INVERTER CORDONI 1 ASSE SUP.	56	INVERTER RULLO MOTORIZZATO	90	MORSETTIERA +Q0-X46
23	INVERTER CORDONI 2 ASSE SUP.	57	PAGINA LASCIATA VUOTA	91	MORSETTIERA +Q0-X47
24	INVERTER CORDONI 1 ASSE INF.	58	DISTRIBUZIONE TERRA MACCHINA	92	MORSETTIERA +Q0-XA1
25	INVERTER CORDONI 2 ASSE INF.	59	LAY - OUT PIASTRA CENTRALE	93	MORSETTIERA +Q0-XIES
26	INVERTER BIELLA ASSE 1	60	LAY - OUT PIASTRA DESTRA	94	MORSETTIERA +Q0-XP
27	X9-X10 INVERTER BIELLA ASSE 1	61	LAY - OUT PIASTRA SINISTRA	95	MORSETTIERA +Q0-XI
28	INVERTER BIELLA ASSE 2	62	PAGINA LASCIATA VUOTA	96	MORSETTIERA +Q0-XM1
29	X9-X10 INVERTER BIELLA ASSE 2	63	PAGINA LASCIATA VUOTA	97	MORSETTIERA +Q0-XM2
30	INVERTER BIELLA ASSE AUX	64	CABLAGGIO +Q0 TIPO A	98	MORSETTIERA +Q0-XM3
31	X9-X10 INVERTER BIELLA ASSE AUX	65	COMPLESSIVO CAVI BORDO MACCHINA	99	MORSETTIERA +Q0-XM4
32	INVERTER CONTINUOS TRIM	66	COMPLESSIVO CAVI BORDO MACCHINA	100	INDICE SCHEMA ELETTRICO
33	X9-X10 INVERTER CONTINUOS TRIM	67	COMPLESSIVO CAVI DI CONNESSIONE	101	INDICE SCHEMA ELETTRICO
34	INVERTER EDGE GUIDE	68	MORSETTIERA +Q0-X1		

Fosber

FOSBER S.p.A.
via Provinciale per Camaiore, 27/28 55060 Monsagrati (Lucca) - ITALIA
T. +39.0583.3891 - F. +39.0583.389205/385567
E-mail: info@fosber.it

TWIN 400 T.1
INDICE SCHEMA ELETTRICO
ÍNDICE ESQUEMA ELECTRICO

customer	**CORRUGADORA GUATEMA**	REL	**L.CENTI**	**28/06/17**	issued	**28/06/2017**
job nr.	**4607**	REV			proj. sect.	**=TW4+Q0**
serial nr.	**COM17279**	DEF			page	**109 of 110**

1	SECCIÓN ESQUEMA ELÉCTRICO	35	INVERTER ROTACIÓN EJE 1	69	BORNERA +Q0-X2
2	PAG. DEJADA EN BLANCO INTENCIO.	36	INVERTER ROTACIÓN EJE 2	70	BORNERA +Q0-X3
3	INGRESO ALIMENTACIÓN DI LÍNEA	37	INVERTER ROTACIÓN EJE AUXILIAR	71	BORNERA +Q0-X4
4	ALIMENTACIÓN AUXILIARES	38	I/O DIAGNÓSTICO CUADRO NODO 18	72	BORNERA +Q0-X5
5	CIRCUITOS DE POTENCIA Y CC BUS	39	I/O MANDO EJES	73	BORNERA +Q0-X6
6	MOTORES SOPLOS Y DESPL. MÁQUINA	40	I/O MANDOS INTERIOR CUADRO	74	BORNERA +Q0-X7
7	INVERTER CARRO ROBOT CUCHILLAS	41	I/O DE MANDO INVERTER	75	BORNERA +Q0-X8
8	INVERTER ROBOT 1 HENDEDORES SUPERIOR	42	DETECCIÓN UTENSILIOS	76	BORNERA +Q0-X8A
9	INVERTER ROBOT 2 HENDEDORES SUPERIOR	43	ALIMENTACIÓN MÓDULOS REMOTOS	77	BORNERA +Q0-X9
10	INVERTER ROBOT 1 HENDEDORES INFERIOR	44	RED CAN OPEN	78	BORNERA +Q0-X10
11	INVERTER ROBOT 2 HENDEDORES INFERIOR	45	ALIMENTACIÓN PARA +Q1	79	BORNERA +Q0-X11
12	INVERTER BIELA EJE 1	46	INTERFAZ +Q1 1/2	80	BORNERA +Q0-X11
13	INVERTER BIELA EJE 2	47	INTERFAZ +Q1 2/2	81	BORNERA +Q0-X12
14	INVERTER BIELA EJE AUXILIAR	48	REFERENCIAS VELOCIDAD IN	82	BORNERA +Q0-X13
15	INVERTER BOQUILLAS RECORTE CONTINUO	49	PAG. INTENCIONADAMENTE EN BLANCO	83	BORNERA +Q0-X14
16	INVERTER GUÍAS BORDE	50	RED DEVICE NET DE+Q1	84	BORNERA +Q0-X17
17	INVERTER ROTACIÓN EJE 1	51	TABLERO DE BORNES PASIVA -XP1	85	BORNERA +Q0-X19
18	INVERTER ROTACIÓN EJE 2	52	TABLERO DE BORNES PASIVA -XP2	86	BORNERA +Q0-X28
19	INVERTER ROTACIÓN EJE AUXILIAR	53	I/O BORDE MÁQUINA	87	BORNERA +Q0-X31
20	LÓGICA INVERTER CUCHILLAS	54	PAG. DEJADA EN BLANCO INTENCIO.	88	BORNERA +Q0-X32
21	X9-X10 BLADES' ROBOT INVERTER	55	INVERTER RODILLO MOTORIZADO	89	BORNERA +Q0-X40
22	INVERTER HENDEDORES 1 EJE SUP.	56	INVERTER RODILLO MOTORIZADO	90	BORNERA +Q0-X46
23	INVERTER HENDEDORES 2 EJE SUP.	57	PAG. DEJADA EN BLANCO INTENCIO.	91	BORNERA +Q0-X47
24	INVERTER HENDEDORES 1 EJE INF.	58	DISTRIBUCIÓN TIERRA MÁQUINA	92	BORNERA +Q0-XA1
25	INVERTER HENDEDORES 2 EJE INF.	59	LAY - OUT PLACA CENTRAL	93	BORNERA +Q0-XIES
26	INVERTER BIELA EJE 1	60	LAY - OUT PLACA DERECHA	94	BORNERA +Q0-XP
27	X9-X10 INVERTER BIELA EJE 1	61	LAY - OUT PLACA IZQUIERDA	95	BORNERA +Q0-XI
28	INVERTER BIELA EJE 2	62	PAG. DEJADA EN BLANCO INTENCIO.	96	TABLERO DE BORNES +Q0-XM1
29	X9-X10 INVERTER BIELA EJE 2	63	PAG. DEJADA EN BLANCO INTENCIO.	97	TABLERO DE BORNES +Q0-XM2
30	INVERTER BIELA EJE AUX	64	CABLEADO +Q0 TIPO A	98	TABLERO DE BORNES +Q0-XM3
31	X9-X10 INVERTER BIELA EJE AUX	65	CONJ. CABLES BORDO MÁQUINA	99	TABLERO DE BORNES +Q0-XM4
32	INVERTER RECORTE CONTINUO	66	CONJ. CABLES BORDO MÁQUINA	100	ÍNDICE ESQUEMA ELÉCTRICO
33	X9-X10 INVERTER RECORTE CONTINUO	67	CONJUNTO CABLES DE CONEXIÓN	101	ÍNDICE ESQUEMA ELÉCTRICO
34	INVERTER GUÍAS BORDE	68	BORNERA +Q0-X1		

Fosber

FOSBER S.p.A.
via Provinciale per Camaiore, 27/28 55060 Monsagrati (Lucca) - ITALIA
T. +39.0583.3891 - F. +39.0583.389205/385567
E-mail: info@fosber.it

TWIN 400 T.1
INDICE SCHEMA ELETTRICO
ÍNDICE ESQUEMA ELÉCTRICO

customer	**CORRUGADORA GUATEMA**	REL	**L.CENTI**	**28/06/17**	issued	**28/06/2017**
job nr.	**4607**	REV			proj. sect.	**=TW4+Q0**
serial nr.	**COM17279**	DEF			page	**110 of 110**

TWIN 400 T.1

=TW4+Q1

FOSBER S.p.A.
via Provinciale per Camaiore, 27/28 55060 Monsagrati (Lucca) - ITALIA
T. +39.0583.3891 - F. +39.0583.389205/385567
E-mail: info@fosber.it

TWIN 400 T.1
SEZIONE SCHEMA ELETTRICO
SECCIÓN ESQUEMA ELÉCTRICO

customer	**CORRUGADORA GUATEMA**	REL	**L.CENTI**	**28/06/17**	issued	**28/06/2017**
job nr.	**4607**	REV			proj. sect.	**=TW4+Q1**
serial nr.	**COM17279**	DEF			page	**1 of 114**

FOSBER S.p.A.
via Provinciale per Camaiore, 27/28 55060 Monsagrati (Lucca) - ITALIA
T. +39.0583.3891 - F. +39.0583.389205/385567
E-mail: info@fosber.it

TWIN 400 T.1

PAGINA LASCIATA VUOTA
PÁGINA DEJADA EN BLANCO

customer	**CORRUGADORA GUATEMA**	REL	**L.CENTI**	**28/06/17**	issued	**28/06/2017**
job nr.	**4607**	REV			proj. sect.	**=TW4+Q1**
serial nr.	**COM17279**	DEF			page	**2 of 114**

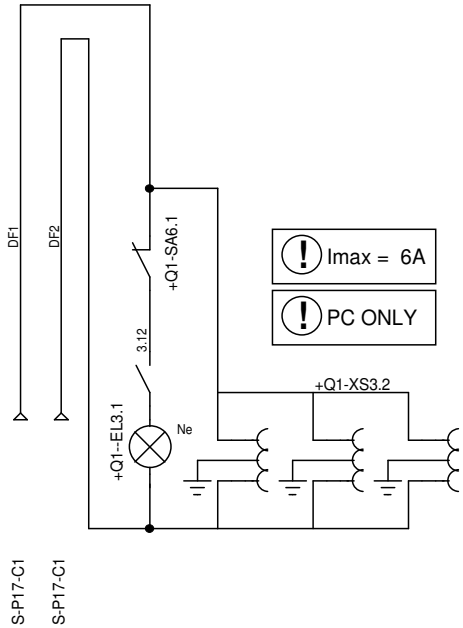

Imax = 6A

PC ONLY

ATTENZIONE !
I CIRCUITI COLORATI ARANCIONE
POSSONO RIMANERE IN TENSIONE
ANCHE DOPO L' APERTURA DELL'
INTERRUTTORE GENERALE

WARNING !
ORANGE-COLOURED CIRCUITS
REMAIN LIVE ALSO AFTER OPENING
THE MAIN SUPPLY BREAKER

FOSBER S.p.A.
via Provinciale per Camaiore, 27/28 55060 Monsagrati (Lucca) - ITALIA
T. +39.0583.3891 - F. +39.0583.389205/385567
E-mail: info@fosber.it

TWIN 400 T.1
INGRESSO ALIMENTAZIONE DA Q0
ENTRADA ALIMENTACIÓN DE Q0

customer	CORRUGADORA GUATEMA	REL	L.CENTI	28/06/17	issued	28/06/2017
job nr.	4607	REV			proj. sect.	=TW4+Q1
serial nr.	COM17279	DEF			page	3 of 114

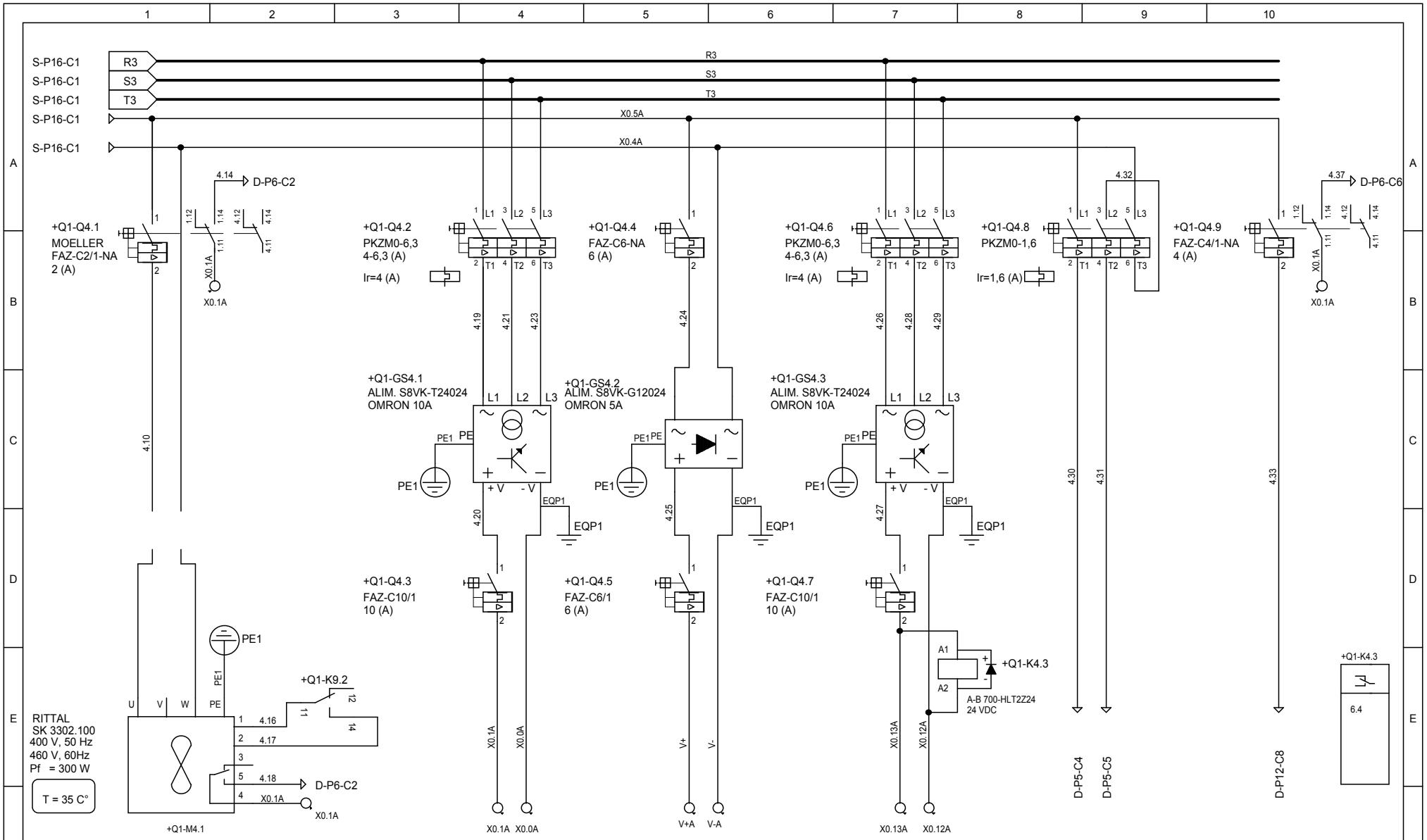

FOSBER S.p.A. via Provinciale per Camaiore, 27/28 55060 Monsagrati (Lucca) - ITALIA T. +39.0583.3891 - F. +39.0583.389205/385567 E-mail: info@fosber.it	**TWIN 400 T.1** ALIMENTAZIONE AUSILIARI ALIMENTACIÓN AUXILIARES	customer	CORRUGADORA GUATEMA	REL	L.CENTI	28/06/17	issued	29/06/2017
		job nr.	4607	REV			proj. sect.	=TW4+Q1
		serial nr.	COM17279	DEF			page	4 of 114

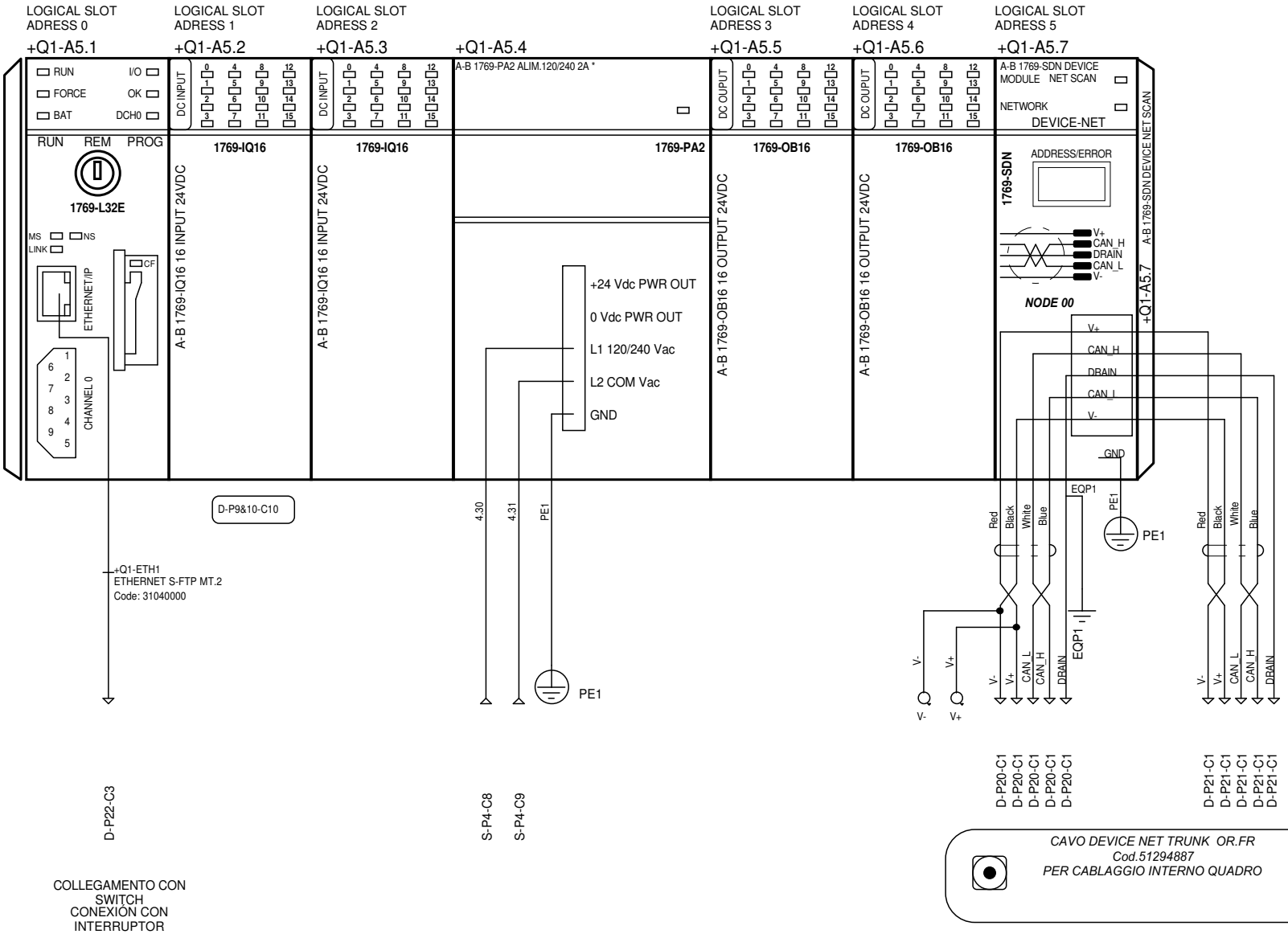

FOSBER S.p.A. via Provinciale per Camaiore, 27/28 55060 Monsagrati (Lucca) - ITALIA T. +39.0583.3891 - F. +39.0583.389205/385567 E-mail: info@fosber.it	**TWIN 400 T.1** CONFIGURAZIONE PLC CONFIGURACIÓN PLC	customer	CORRUGADORA GUATEMA	REL	L.CENTI	28/06/17	issued	29/06/2017
		job nr.	4607	REV			proj. sect.	=TW4+Q1
		serial nr.	COM17279	DEF			page	5 of 114

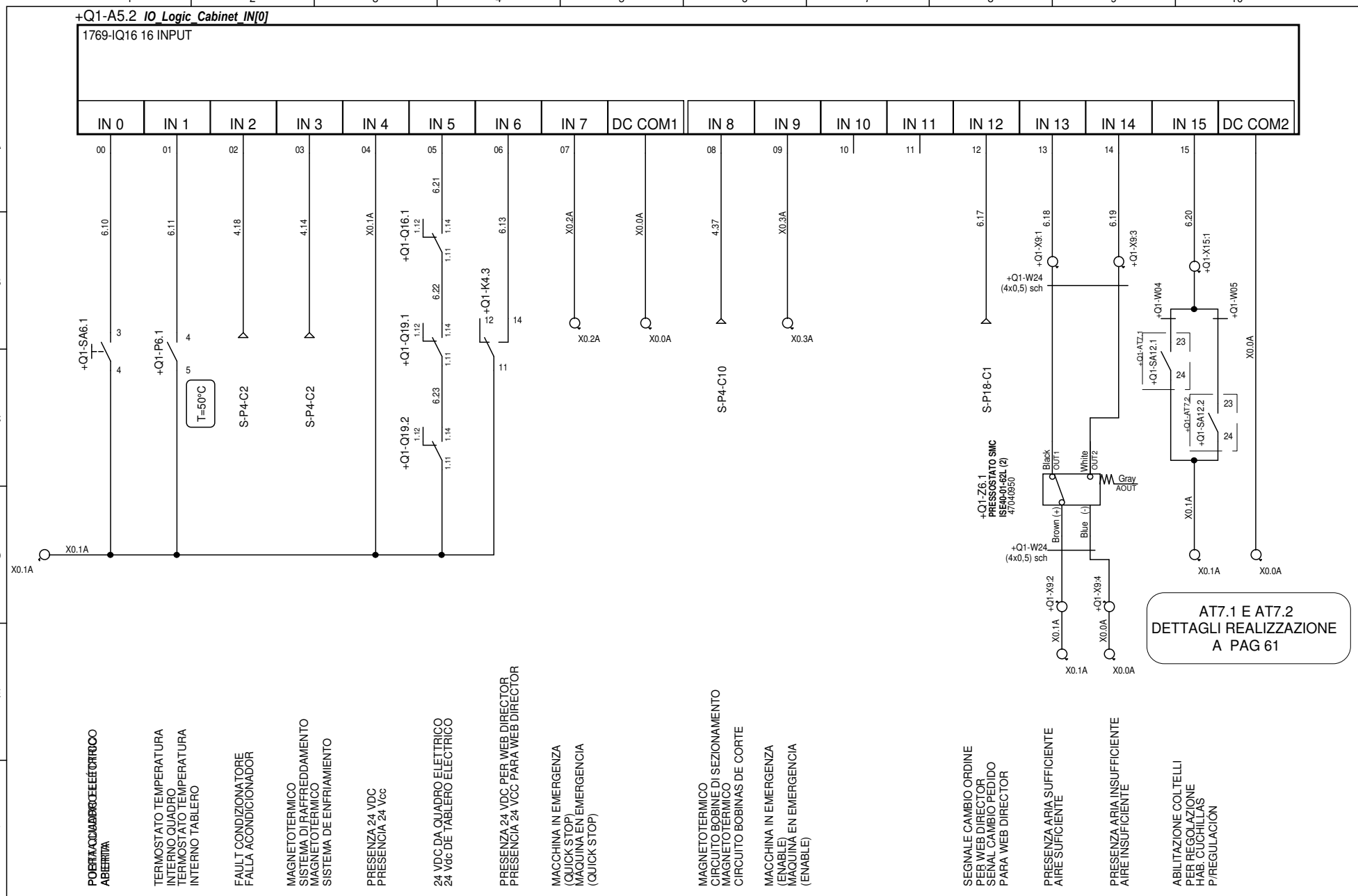

Fosber
FOSBER S.p.A.
via Provinciale per Camaiore, 27/28 55060 Monsagrati (Lucca) - ITALIA
T. +39.0583.3891 - F. +39.0583.389205/385567
E-mail: info@fosber.it

TWIN 400 T.1
INPUT DIAGNOSTICA QUADRO
INPUT DIAGNÓSTICO CUADRO

customer	CORRUGADORA GUATEMA	REL	L.CENTI	28/06/17	issued	29/06/2017
job nr.	4607	REV			proj. sect.	=TW4+Q1
serial nr.	COM17279	DEF			page	6 of 114

+Q1-A5.3 *IO_Logic_Cabinet_IN[1]*

1769-IQ16 16 INPUT

IN 0	IN 1	IN 2	IN 3	IN 4	IN 5	IN 6	IN 7	DC COM1	IN 8	IN 9	IN 10	IN 11	IN 12	IN 13	IN 14	IN 15	DC COM2
00	01	02	03	04	05	06	07		08	09	10	11	12	13	14	15	
7.10	7.11	7.12	7.13	7.14	7.15	7.16	7.17		7.18	7.19	7.20	7.21	7.22	7.23	7.24	7.25	
S-P26-C1	S-P26-C1	+Q1-K11.1 14 11(+)	S-P26-C1	S-P26-C1	S-P26-C1	S-P30-C8		X0.0A	+Q1-X15:2 +Q1-W04 +Q1-AT7.1 +Q1-SA7.1 13 14 7.18A 23 24 +Q1-SA12.1	+Q1-X15:3 +Q1-W05 +Q1-SA7.2 13 14 7.19A 23 24 +Q1-AT7.2 +Q1-SA12.2	S-P14-C1	S-P14-C3	S-P14-C5	S-P14-C7	S-P14-C9		X0.0A
X0.1A								X0.0A	X0.1A						X0.1A		X0.0A

AT7.1 E AT7.2
DETTAGLI REALIZZAZIONE
A PAG 61

LINEA IN MARCIA LINEA EN MARCHA	PREPARAZIONE AL CAMBIO ORDINE PREPARACIÓN AL CAMBIO PEDIDO	CAMBIO ORDINE GAP\NO GAP CAMBIO PEDIDO GAP\NO GAP	PRESENZA CARTONE SOTTO RUOTA DI MISURA PRESENCIA CARTON DEBAJO DE LA RUEDA DE MEDIDA	RESET CAMBIO ORDINE RESET CAMBIO PEDIDO	TAGLIO EFFETTUATO ROTARY SHEAR CORTE EFECTUADO ROTARY SHEAR	DISPONIBILE DISPONIBLE	SELEZIONE COLTELLI PER REGOLAZIONE (LATO NON OP)	SELEZIONE COLTELLI PER REGOLAZIONE (LATO OP) SELECCIÓN CUCHILLAS P/REGULACIÓN (OPS)	PORTA APERTA CARTER SX Q.E. POTENZA PUERTA ABIERTA RESG. IZQ. C. ELÉCT. POTENCIA	PORTA APERTA CARTER DX Q.E. LOGICA PUERTA ABIERTA RESG. DCHO. C. ELÉCT. LÓGICA	PORTA APERTA CARTER SX USCITA CARTONE PUERTA ABIERTA RESG. IZQ. SALIDA CARTÓN	PORTA APERTA CARTER DX USCITA CARTONE PUERTA ABIERTA RESG. DCHO. SALIDA CARTÓN	PORTA APERTA CARTER OPT INGRESSO CARTONE PUERTA ABIERTA RESG. OPC. ENTRADA CARTÓN	DISPONIBILE DISPONIBLE

FOSBER S.p.A.
via Provinciale per Camaiore, 27/28 55060 Monsagrati (Lucca) - ITALIA
T. +39.0583.3891 - F. +39.0583.389205/385567
E-mail: info@fosber.it

TWIN 400 T.1
INPUT INTERFACCIA CON AOC
INPUT INTERFAZ CON AOC

customer	CORRUGADORA GUATEMA	REL	L.CENTI	28/06/17	issued	29/06/2017
job nr.	4607	REV			proj. sect.	=TW4+Q1
serial nr.	COM17279	DEF			page	7 of 114

FOSBER S.p.A.
via Provinciale per Camaiore, 27/28 55060 Monsagrati (Lucca) - ITALIA
T. +39.0583.3891 - F. +39.0583.389205/385567
E-mail: info@fosber.it

TWIN 400 T.1

PAGINA VUOTA
PAGINA VACÍA

customer	**CORRUGADORA GUATEMA**	REL	**L.CENTI**	**28/06/17**	issued	**29/06/2017**
job nr.	**4607**	REV			proj. sect.	**=TW4+Q1**
serial nr.	**COM17279**	DEF			page	**8 of 114**

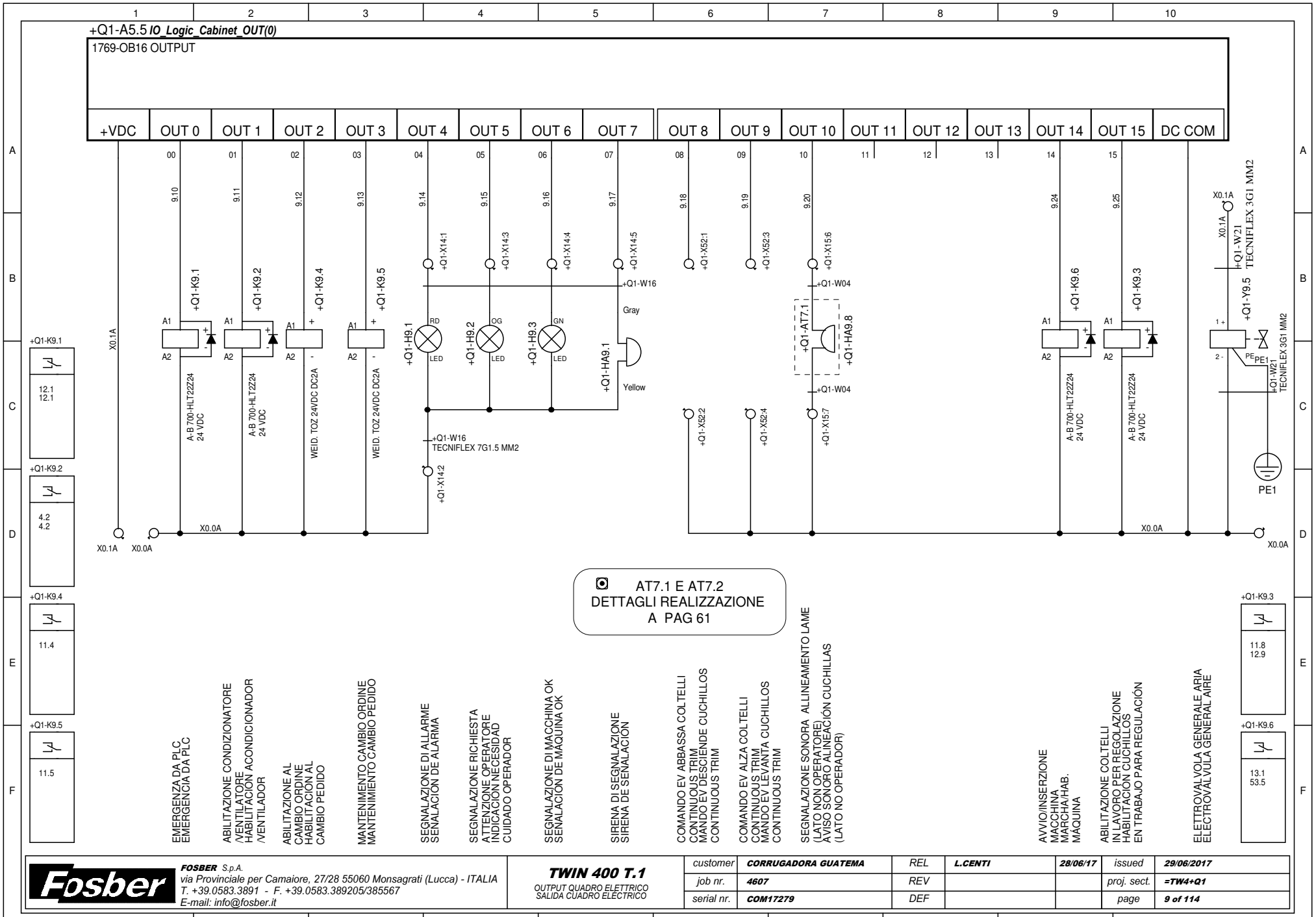

FOSBER S.p.A.
via Provinciale per Camaiore, 27/28 55060 Monsagrati (Lucca) - ITALIA
T. +39.0583.3891 - F. +39.0583.389205/385567
E-mail: info@fosber.it

TWIN 400 T.1
OUTPUT QUADRO ELETTRICO
SALIDA CUADRO ELÉCTRICO

customer	CORRUGADORA GUATEMA	REL	L.CENTI	28/06/17	issued	29/06/2017
job nr.	4607	REV			proj. sect.	=TW4+Q1
serial nr.	COM17279	DEF			page	9 of 114

+Q1-A5.6 ***IO_Logic_Cabinet_OUT(1)***

1769-OB16 OUTPUT

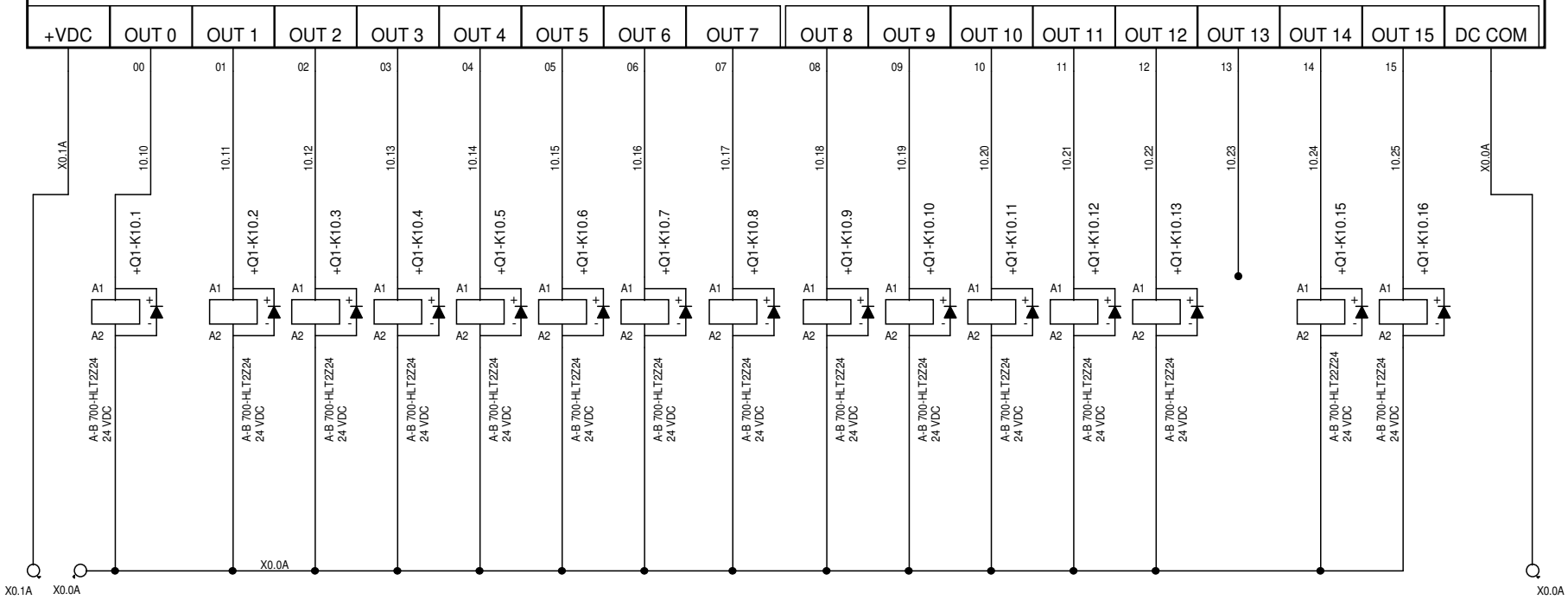

+Q1-K10.1	+Q1-K10.2	+Q1-K10.3	+Q1-K10.4	+Q1-K10.5	+Q1-K10.6	+Q1-K10.7	+Q1-K10.8	+Q1-K10.9	+Q1-K10.10	+Q1-K10.11	+Q1-K10.12	+Q1-K10.13		+Q1-K10.15	+Q1-K10.16
27.1	27.2	27.3	27.4	27.5	27.6	27.7	27.8	27.9	27.10	33.4	33.4	33.5		33.6 52.9	33.6
MACCHINA IN EMERGENZA MAQUINA EN EMERGENCIA	N-STOP N-STOP	INCREMENTA VELOCITA' AUMENTA VELOCIDAD	DECREMENTA VELOCITA' DISMINUYE VELOCIDAD	MACCHINA PRONTA ALLA MARCIA MAQUINA PREPARADA PARA MARCHA	MACCHINA PRONTA AL CAMBIO ORDINE MAQUINA PREPARADA PARA CAMBIO PEDIDO	CAMBIO ORDINE IN CORSO CAMBIO PEDIDO EN CURSO	MACCHINA PRONTA AL CAMBIO ORDINE GAP MAQUINA PREPARADA PARA CAMBIO PEDIDO GAP	MACCHINA PRONTA AL CAMBIO ORDINE NO GAP MAQUINA PREPARADA PARA CAMBIO PEDIDO NO GAP	ORDINE SUCCESSIVO TANDEM PEDIDO SUCESIVO TANDEM	TAGLIO EFFETTUATO ROTARY SHEAR CORTE EFECTUADO ROTARY SHEAR	ALLINEAMENTO LATERALE VERSO SINISTRA ALINEACION LATERAL HACIA IZQ.	ALLINEAMENTO LATERALE VERSO DESTRA ALINEACION LATERAL HACIA DCHA.	DISPONIBILE DISPONIBLE	CAMBIO ORDINE IN CORSO CAMBIO PEDIDO EN CURSO	LINEA IN MARCIA LINEA EN MARCHA

FOSBER S.p.A.
via Provinciale per Camaiore, 27/28 55060 Monsagrati (Lucca) - ITALIA
T. +39.0583.3891 - F. +39.0583.389205/385567
E-mail: info@fosber.it

TWIN 400 T.1

OUTPUT INTERFACCIA CON AOC
SALIDA INTERFAZ CON AOC

customer	**CORRUGADORA GUATEMA**	REL	**L.CENTI**	**28/06/17**	issued	**29/06/2017**
job nr.	**4607**	REV			proj. sect.	**=TW4+Q1**
serial nr.	**COM17279**	DEF			page	**10 of 114**

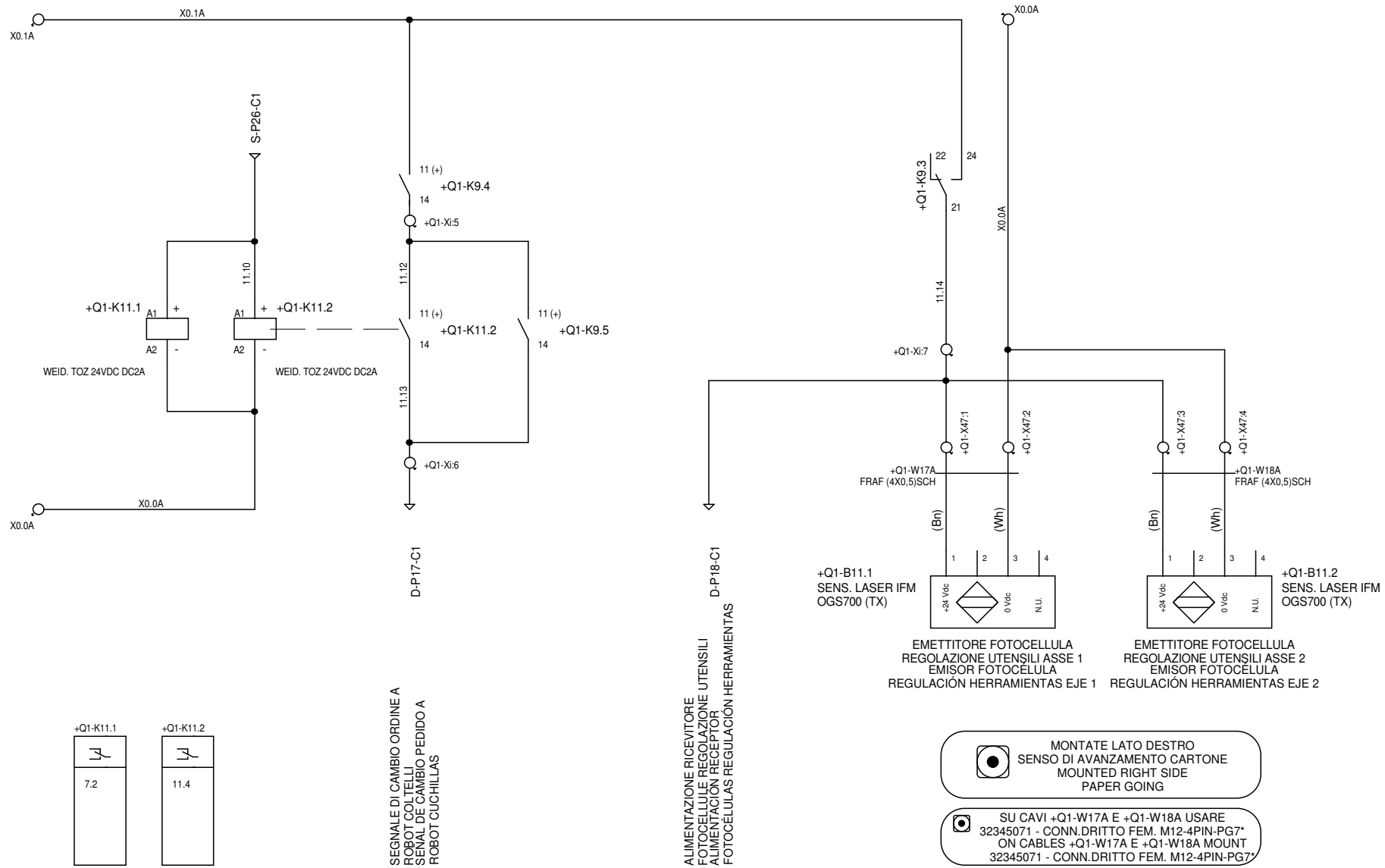

Fosber

FOSBER S.p.A.
via Provinciale per Camaiore, 27/28 55060 Monsagrati (Lucca) - ITALIA
T. +39.0583.3891 - F. +39.0583.389205/385567
E-mail: info@fosber.it

TWIN 400 T.1

GESTIONE SEGNALE DI CAMBIO ORDINE
GESTIÓN SEÑAL DE CAMBIO PEDIDO

customer	**CORRUGADORA GUATEMA**	REL	**L.CENTI**	**28/06/17**	issued	**29/06/2017**
job nr.	**4607**	REV			proj. sect.	**=TW4+Q1**
serial nr.	**COM17279**	DEF			page	**11 of 114**

RELE' DI SICUREZZA MACCHINA
RELÉ DE SEGURIDAD MAQUINA

ATTENZIONE !

I FILI CABLATI SUL CONTATTO NO 57-58 DEVE ESSERE ROSSO

CABLARE SEMPRE IL RELE' +B1-K7.1 ANCHE IN CASO DI MACCHINA CON TAGLIO DAL SOPRA
ALWAYS MOUNT AND WIRE RELAY +B1-K7.1 ALSO EVEN IN MACHINE VERSION UPPER BLADE

12.11

+Q1-K12.1
REL.EM.XPS-AV11113 3NO+3NO RIT

Regolare il tempo di ritardo a 4 secondi
S14=0:Y40=1;K1/K2=0;K3/K4=0

A1 | S13 | S11 | S31 | S32 | S12 | S14 | 03 | 13 | 23 | 37 | 47 | 57 | Y+ | Y64 | Y74 | Y84

A2 | Y39 | S33 | S21 | S22 | S34 | Y40 | 04 | 14 | 24 | 38 | 48 | 58

ERROR, K1K2, K3K4 — PLC

+Q1-K9.1, D-P15-C1, S-P15-C8, CANALE B, D-P13-C1, S-P13-C1, CANALE A, D-P15-C1, S-P15-C8

12.24

+Q1-K12.3
REL.EM.XPS-ATR11530P 3NA+3NA

Regolare il tempo di ritardo a 2 secondi

A1 | S21 | S31 | S32 | S11 | S12 | 13 | 23 | 33 | 41 | 57 | 67 | 77 | S22

S33 | S14 | S34 | S13 | Y2 | Y39 | Y40 | 14 | 24 | 34 | 42 | 58 | 68 | 78 | A2

+Q1-K12.1, S-P4-C10, D-P18-C1, D-P18-C1

+Q1-K12.1 — +Q1-K12.3 — +Q1-K12.10 — +Q1-K12.11

RELAY SIC.OMRON G7SA-4A2B+2OC.

DUPLICAZIONE ARRESTO IN CATEGORIA 1
DUPLICADO PARADA EN CATEGORÍA 1

DUPLICAZIONE ARRESTO IN CATEGORIA 1
DUPLICADO PARADA EN CATEGORÍA 1

BOX FIXED NON OPERATOR SIDE "KNIFE IN WORK FOR REGULATION"

BOX FIXED OPERATOR SIDE "KNIFE IN WORK FOR REGULATION"

+Q1-SA12.1, +Q1-SA12.2, +Q1-W04, +Q1-W05

+Q1-W04 TECNIFLEX 7G1.5 MM2

+Q1-W05 TECNIFLEX 7G1,5 MM2

+Q1-AT7.1 XAP-M3503

+Q1-AT7.2 XAP-M3503

+Q1-X15:4, +Q1-X15:5, +Q1-K9.3, D-P48-C1, D-P18-C1

AT7.1 E AT7.2
DETTAGLI REALIZZAZIONE
A PAG 61

FOSBER S.p.A.
via Provinciale per Camaiore, 27/28 55060 Monsagrati (Lucca) - ITALIA
T. +39.0583.3891 - F. +39.0583.389205/385567
E-mail: info@fosber.it

TWIN 400 T.1
GESTIONE ARRESTO DI EMERGENZA
GESTIÓN PARO DE EMERGENCIA

customer	CORRUGADORA GUATEMA	REL	L.CENTI	28/06/17	issued	29/06/2017
job nr.	4607	REV			proj. sect.	=TW4+Q1
serial nr.	COM17279	DEF			page	12 of 114

CIRCUITO DI RIPRISTINO

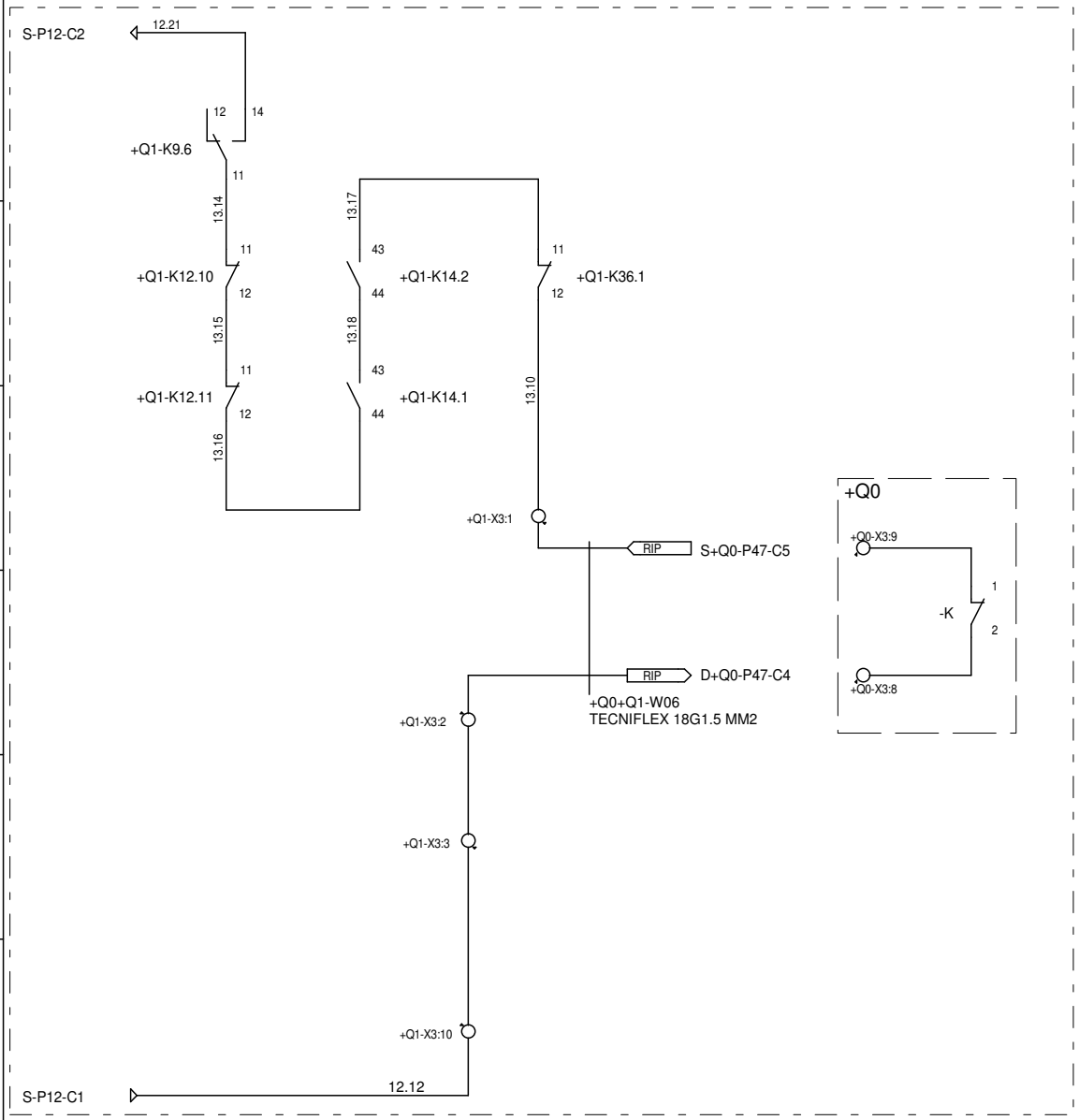

FOSBER S.p.A.
via Provinciale per Camaiore, 27/28 55060 Monsagrati (Lucca) - ITALIA
T. +39.0583.3891 - F. +39.0583.389205/385567
E-mail: info@fosber.it

TWIN 400 T.1
SERIE CIRCUITO RIPRISTINO
SERIE CIRCUITO RESTABLECIMIENTO

customer	CORRUGADORA GUATEMA	REL	L.CENTI	28/06/17	issued	29/06/2017
job nr.	4607	REV			proj. sect.	=TW4+Q1
serial nr.	COM17279	DEF			page	13 of 114

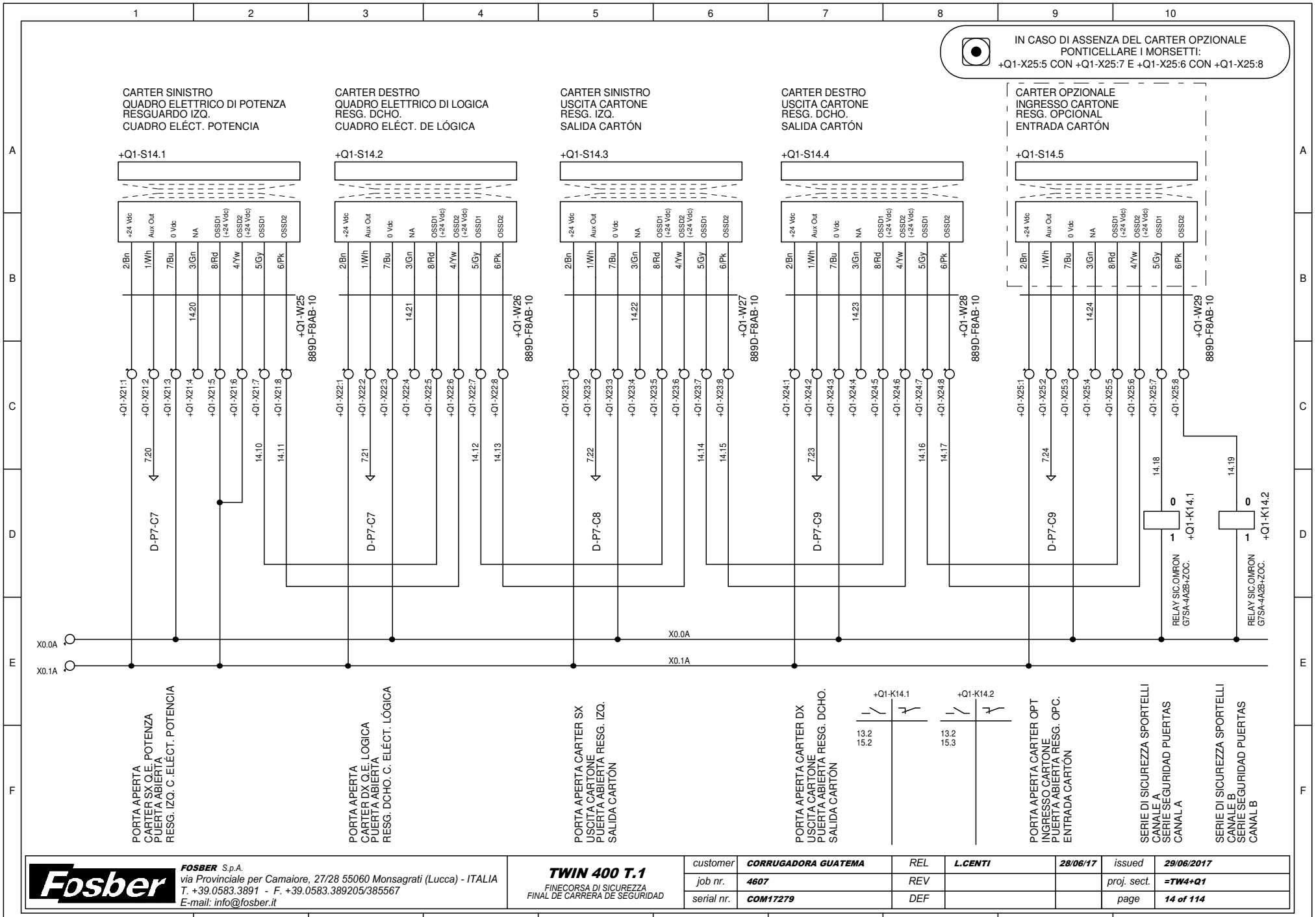

FOSBER S.p.A.
via Provinciale per Camaiore, 27/28 55060 Monsagrati (Lucca) - ITALIA
T. +39.0583.3891 - F. +39.0583.389205/385567
E-mail: info@fosber.it

TWIN 400 T.1
FINECORSA DI SICUREZZA
FINAL DE CARRERA DE SEGURIDAD

customer	CORRUGADORA GUATEMA	REL	L.CENTI	28/06/17	issued	29/06/2017
job nr.	4607	REV			proj. sect.	=TW4+Q1
serial nr.	COM17279	DEF			page	14 of 114

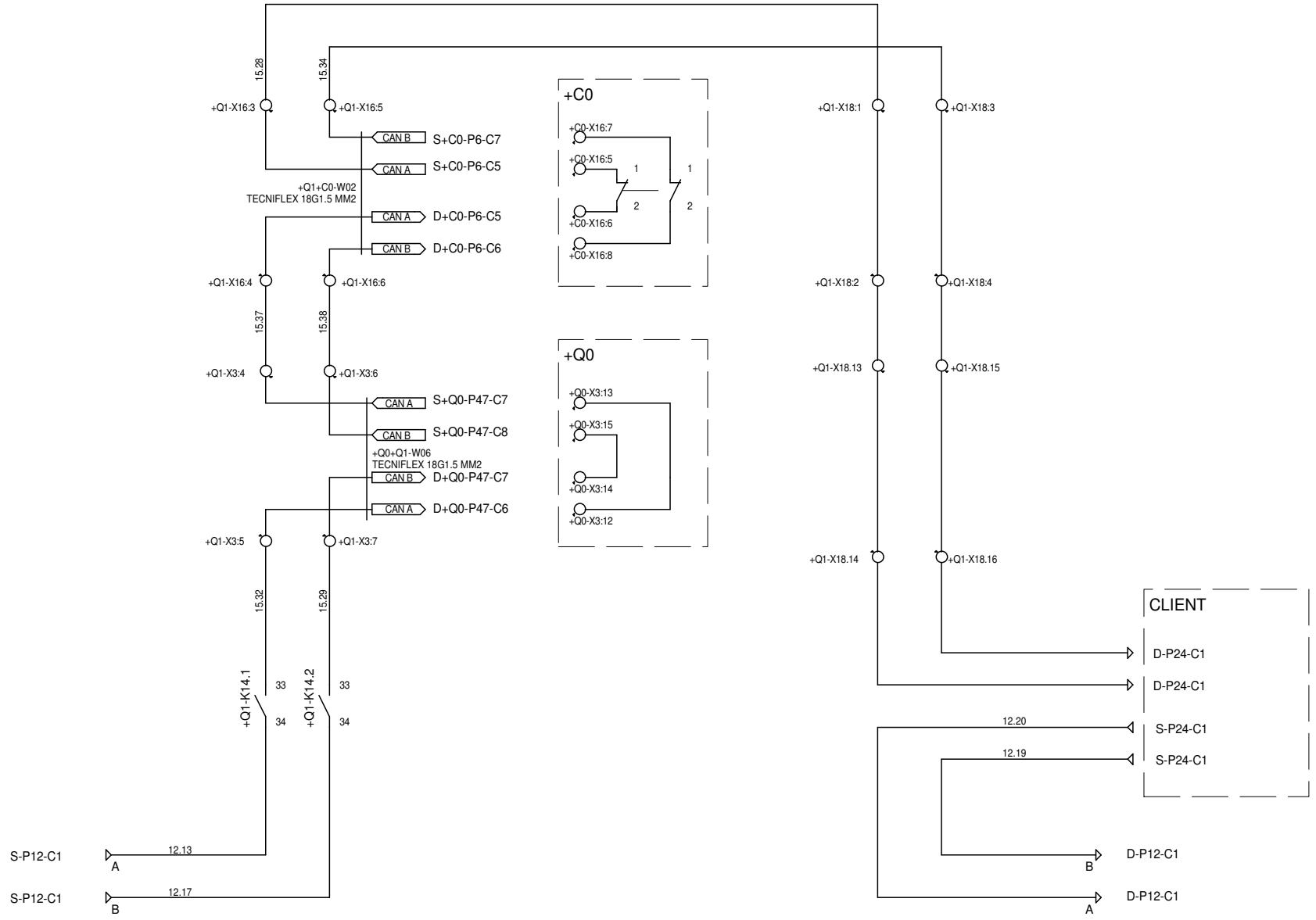

FOSBER S.p.A. via Provinciale per Camaiore, 27/28 55060 Monsagrati (Lucca) - ITALIA T. +39.0583.3891 - F. +39.0583.389205/385567 E-mail: info@fosber.it	**TWIN 400 T.1** SERIE CIRCUITO EMERGENZA SERIE CIRCUITO EMERGENCIA	customer	**CORRUGADORA GUATEMA**	REL	**L.CENTI**	**28/06/17**	issued	**29/06/2017**
		job nr.	**4607**	REV			proj. sect.	**=TW4+Q1**
		serial nr.	**COM17279**	DEF			page	**15 of 114**

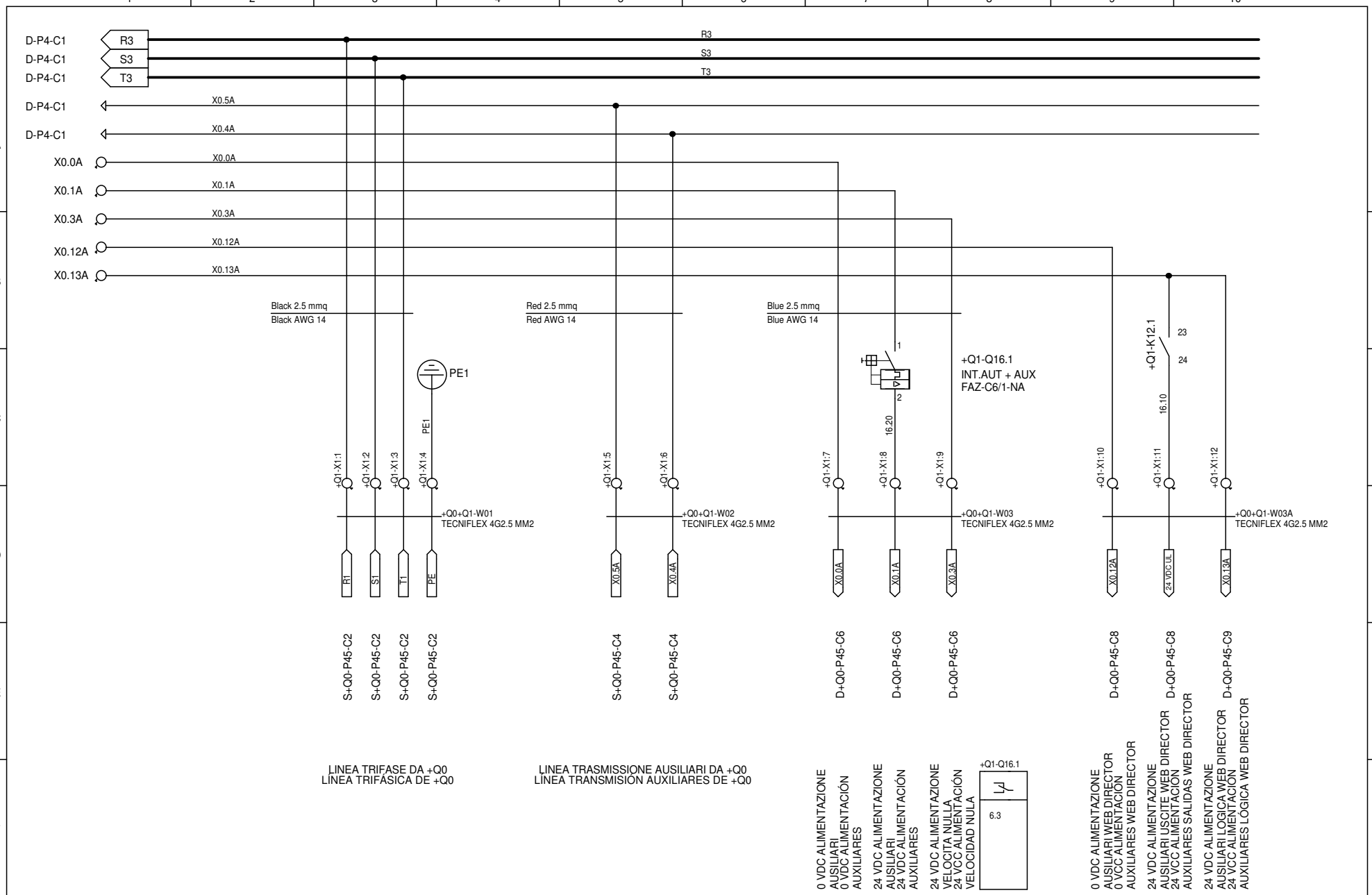

FOSBER S.p.A.
via Provinciale per Camaiore, 27/28 55060 Monsagrati (Lucca) - ITALIA
T. +39.0583.3891 - F. +39.0583.389205/385567
E-mail: info@fosber.it

TWIN 400 T.1
ALIMENTAZIONE DA +Q0
ALIMENTACIÓN DE +Q0

customer	CORRUGADORA GUATEMA	REL	L.CENTI	28/06/17	issued	29/06/2017
job nr.	4607	REV			proj. sect.	=TW4+Q1
serial nr.	COM17279	DEF			page	16 of 114

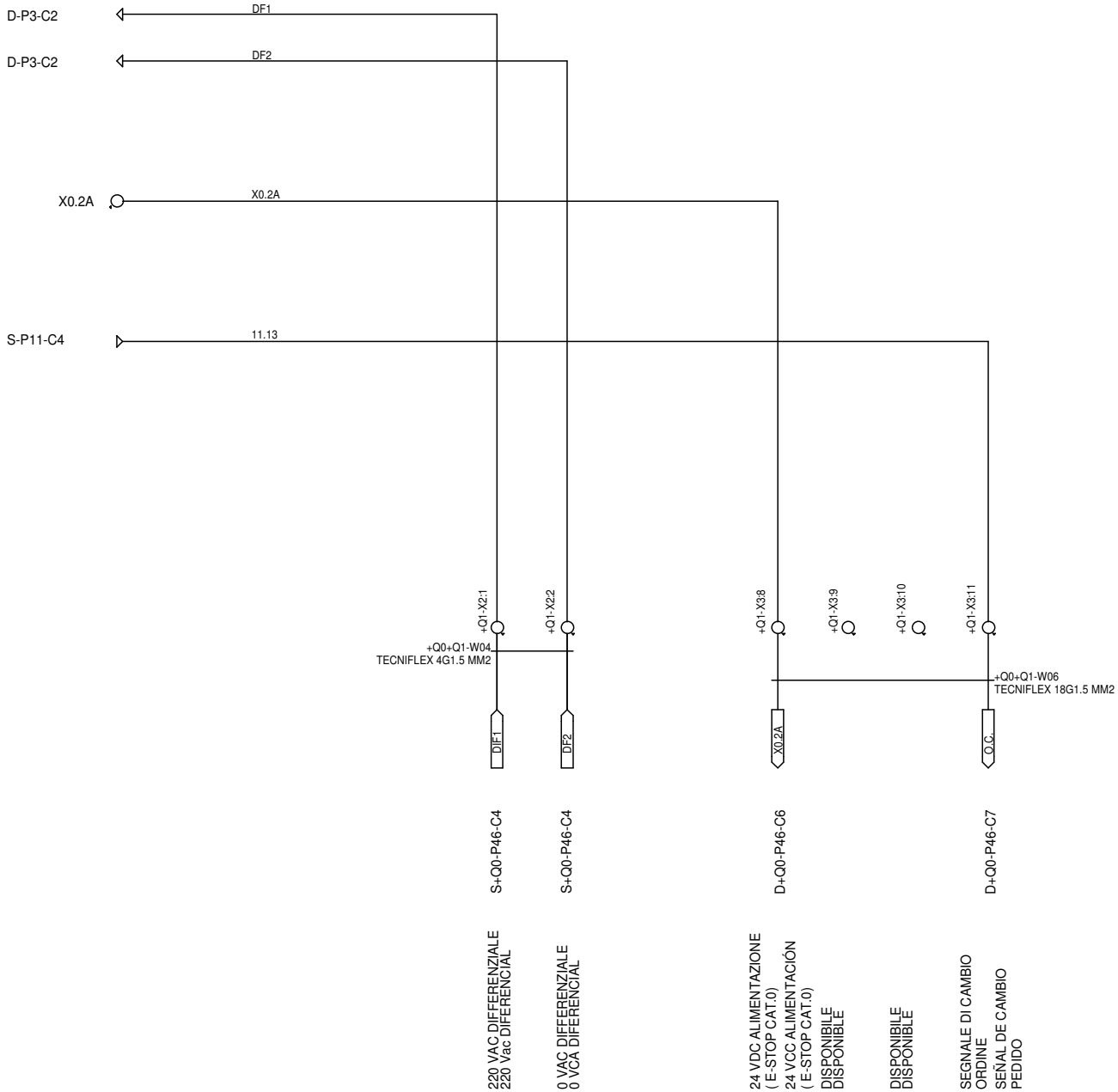

FOSBER S.p.A.
via Provinciale per Camaiore, 27/28 55060 Monsagrati (Lucca) - ITALIA
T. +39.0583.3891 - F. +39.0583.389205/385567
E-mail: info@fosber.it

TWIN 400 T.1
INTERFACCIA CON +Q0 1/2
INTERFAZ CON +Q0 1/2

customer	CORRUGADORA GUATEMA	REL	L.CENTI	28/06/17	issued	29/06/2017
job nr.	4607	REV			proj. sect.	=TW4+Q1
serial nr.	COM17279	DEF			page	17 of 114

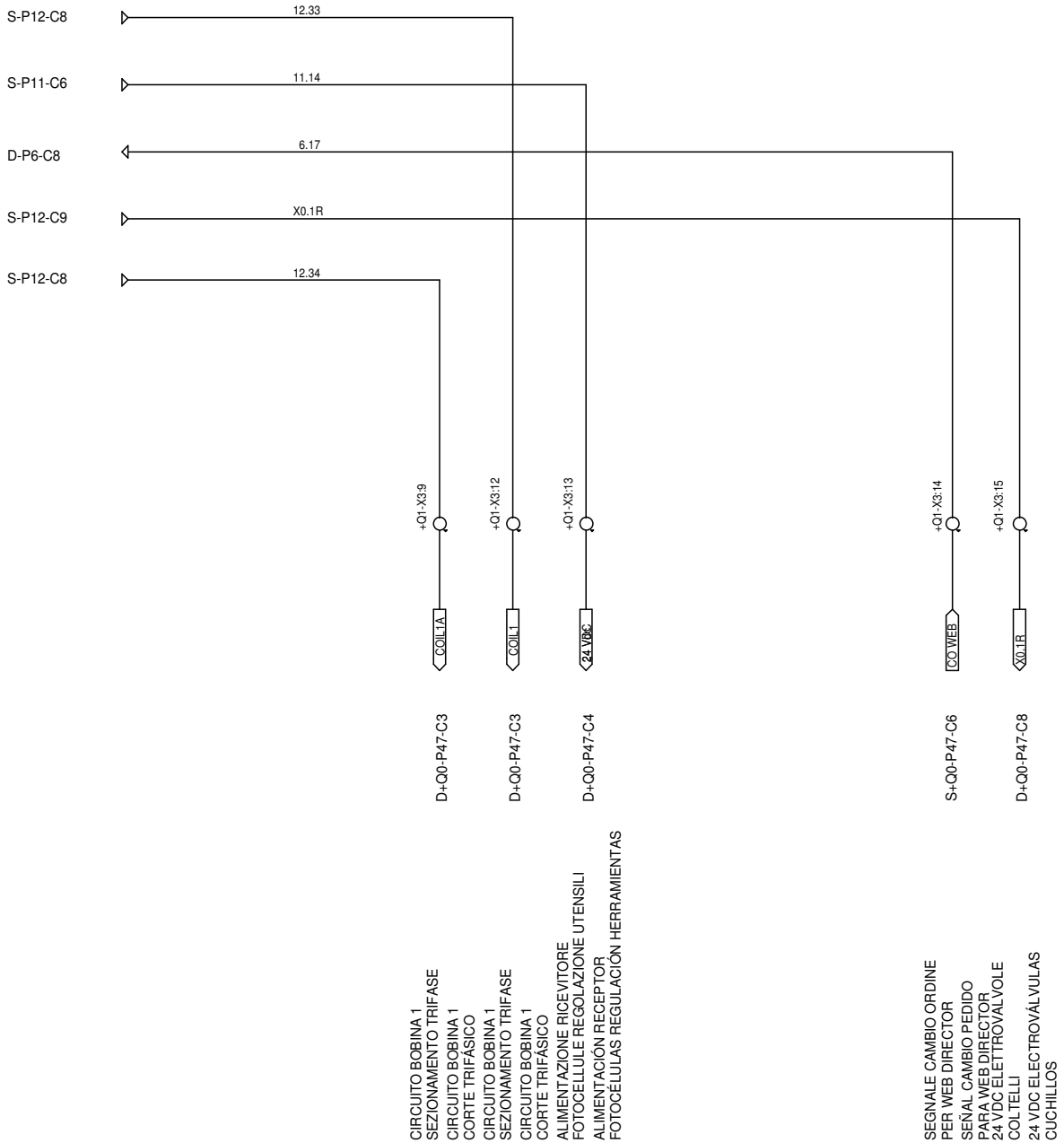

FOSBER S.p.A.
via Provinciale per Camaiore, 27/28 55060 Monsagrati (Lucca) - ITALIA
T. +39.0583.3891 - F. +39.0583.389205/385567
E-mail: info@fosber.it

TWIN 400 T.1
INTERFACCIA CON +Q0 2/2
INTERFAZ CON +Q0 2/2

customer	CORRUGADORA GUATEMA	REL	L.CENTI	28/06/17	issued	29/06/2017
job nr.	4607	REV			proj. sect.	=TW4+Q1
serial nr.	COM17279	DEF			page	18 of 114

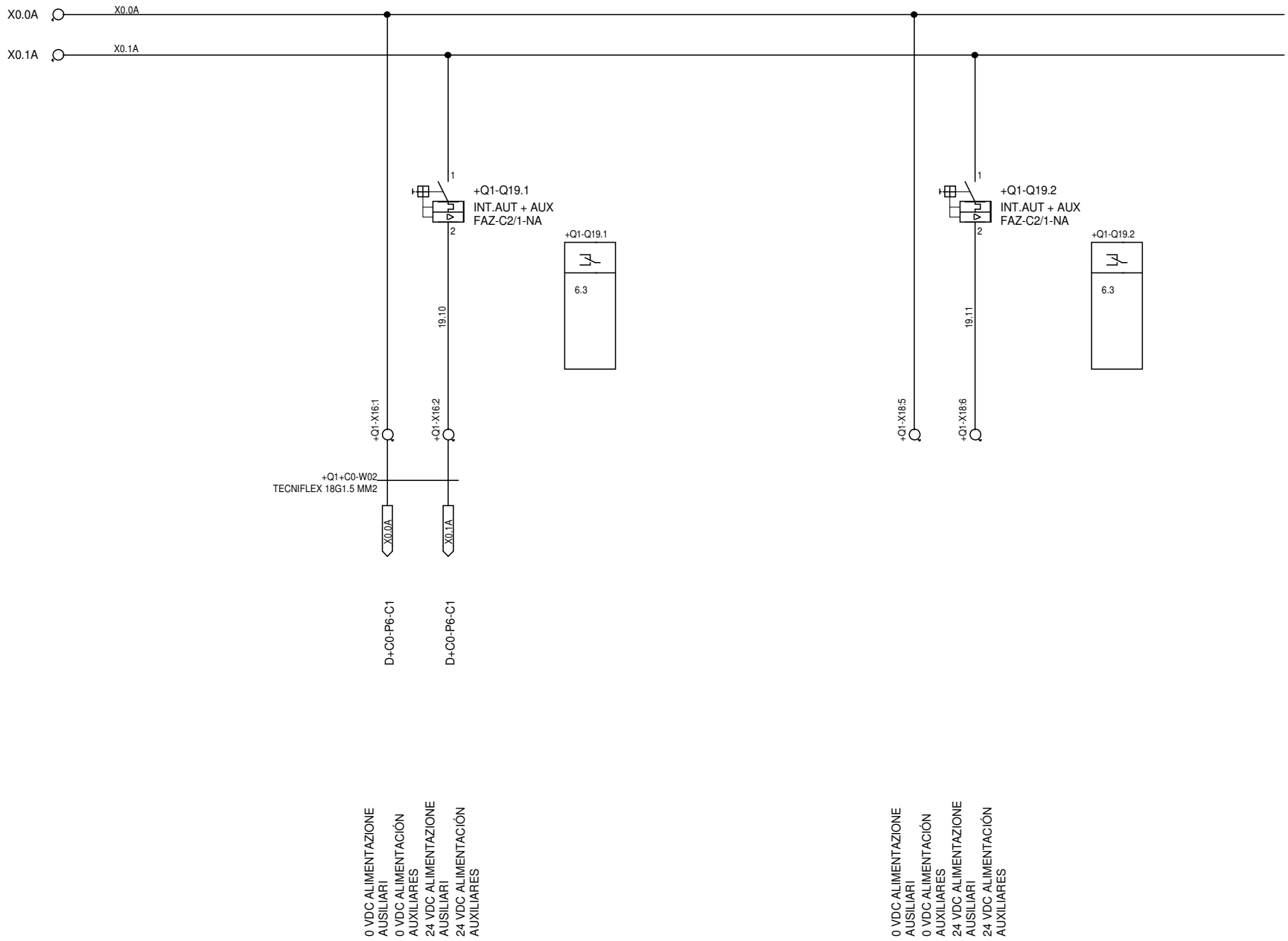

FOSBER S.p.A.
via Provinciale per Camaiore, 27/28 55060 Monsagrati (Lucca) - ITALIA
T. +39.0583.3891 - F. +39.0583.389205/385567
E-mail: info@fosber.it

TWIN 400 T.1
ALIMENTAZIONE AUSILIARI
ALIMENTACIÓN AUXILIARES

customer	CORRUGADORA GUATEMA	REL	L.CENTI	28/06/17	issued	29/06/2017
job nr.	4607	REV			proj. sect.	=TW4+Q1
serial nr.	COM17279	DEF			page	19 of 114

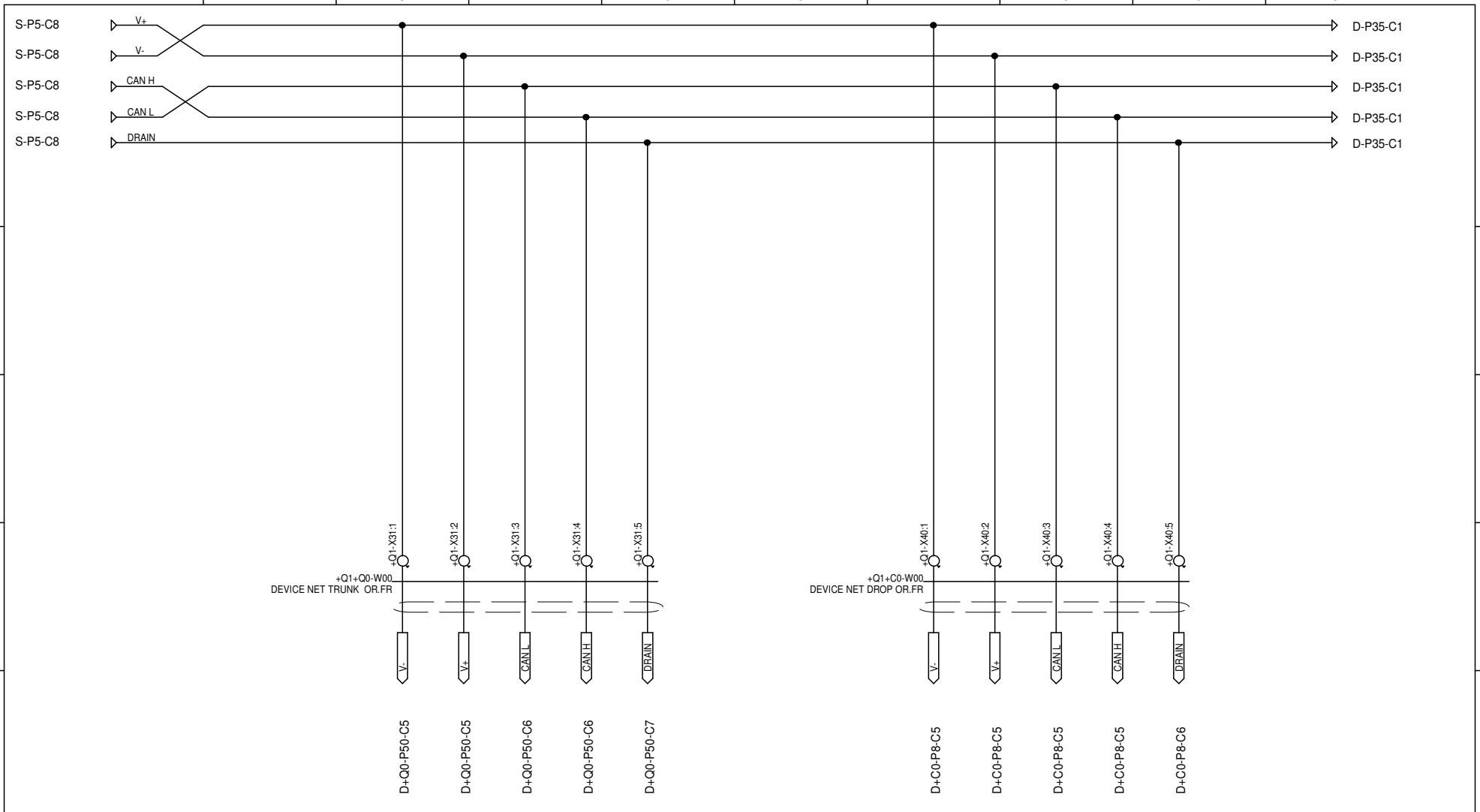

DEVICE NET PER
QUADRO ELETTRICO DI POTENZA (+Q0)

DEVICE NET PARA
CUADRO ELÉCTRICO DE POTENCIA (+Q0)

DEVICE NET PER
CONSOLE DI USCITA (+C0)

DEVICE NET PARA
CONSOLA DE SALIDA (+C0)

The lenght cable +Q1+C0-W00
must be shorter then 5 MT

FOSBER S.p.A.
via Provinciale per Camaiore, 27/28 55060 Monsagrati (Lucca) - ITALIA
T. +39.0583.3891 - F. +39.0583.389205/385567
E-mail: info@fosber.it

TWIN 400 T.1
DEVICE NET NETWORK
DEVICE NET NETWORK

customer	**CORRUGADORA GUATEMA**	REL	**L.CENTI**	**28/06/17**	issued	**29/06/2017**
job nr.	**4607**	REV			proj. sect.	**=TW4+Q1**
serial nr.	**COM17279**	DEF			page	**20 of 114**

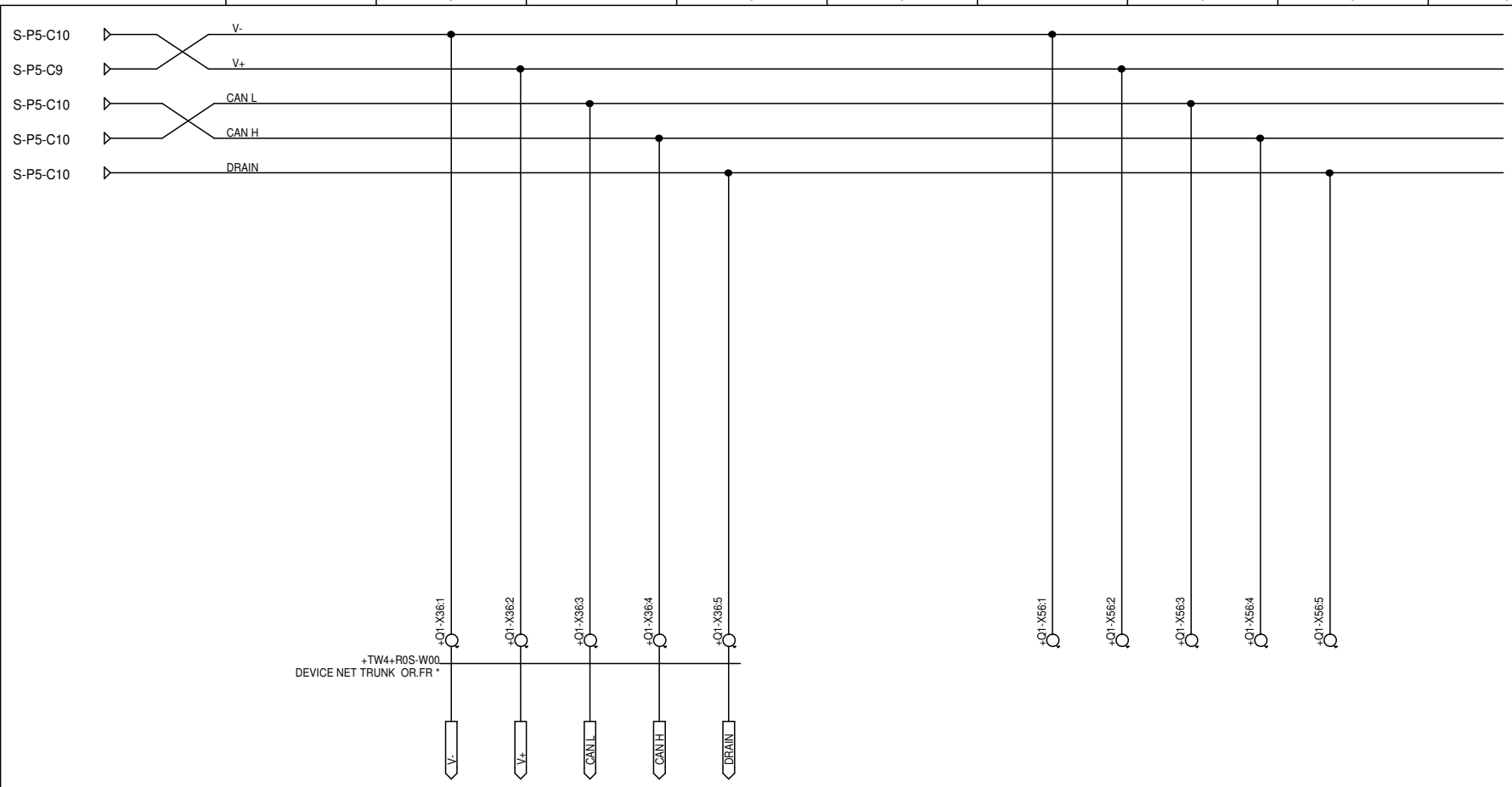

DEVICE NET PER
ROTARY (COSTANT SYSTEM)
DEVICE NET PARA
ROTARY (CONSTANT SYSTEM)

RETE DEVICE-NET PER +Q2
RED DEVICE-NET PARA +Q2

FOSBER S.p.A.
via Provinciale per Camaiore, 27/28 55060 Monsagrati (Lucca) - ITALIA
T. +39.0583.3891 - F. +39.0583.389205/385567
E-mail: info@fosber.it

TWIN 400 T.1
DEVICE NET NETWORK
DEVICE NET NETWORK

customer	**CORRUGADORA GUATEMA**	REL	**L.CENTI**	**28/06/17**	issued	**29/06/2017**
job nr.	**4607**	REV			proj. sect.	**=TW4+Q1**
serial nr.	**COM17279**	DEF			page	**21 of 114**

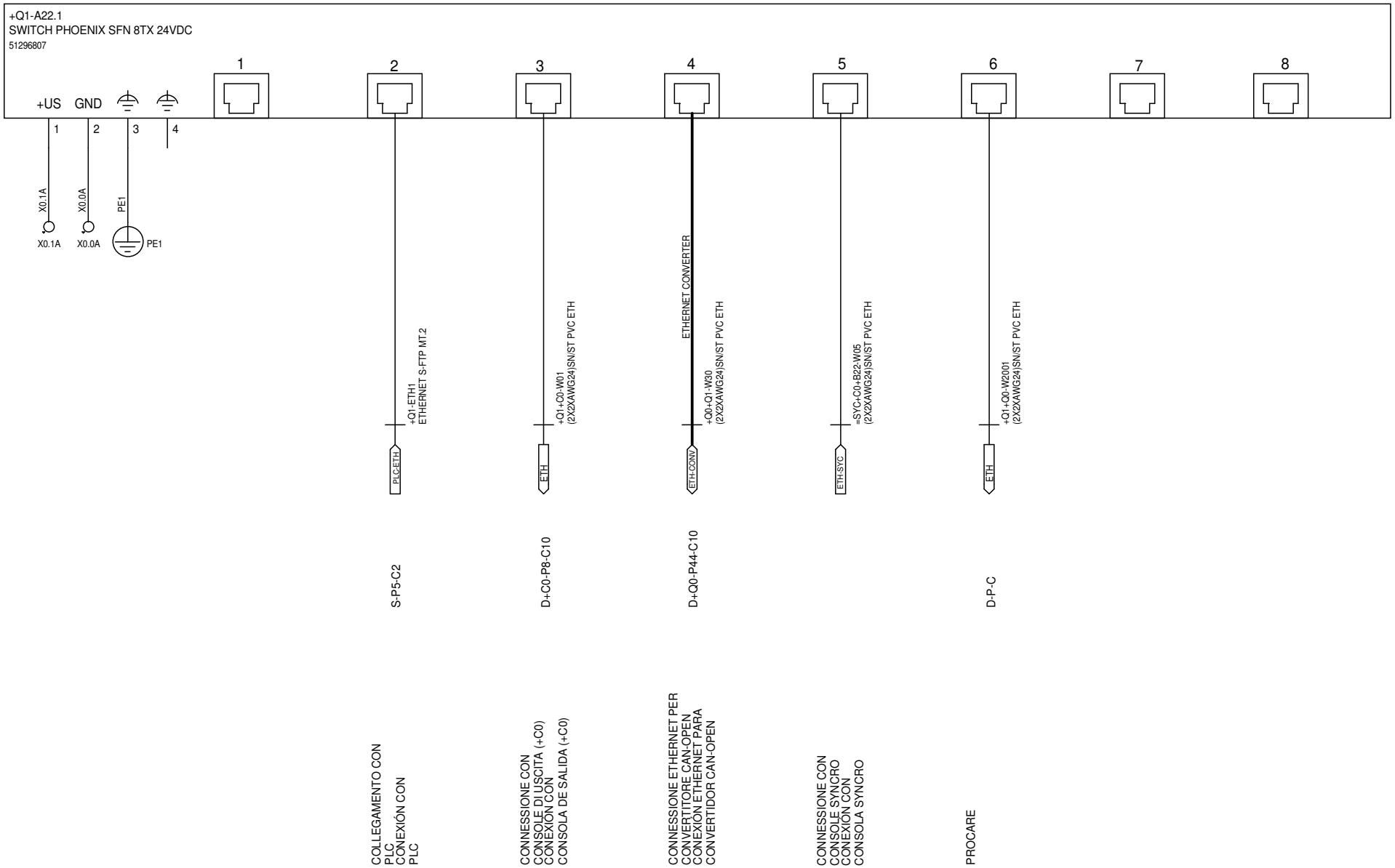

FOSBER S.p.A.
via Provinciale per Camaiore, 27/28 55060 Monsagrati (Lucca) - ITALIA
T. +39.0583.3891 - F. +39.0583.389205/385567
E-mail: info@fosber.it

TWIN 400 T.1
SWITCH ETHERNET
INTERRUPTOR ETHERNET

customer	**CORRUGADORA GUATEMA**	REL	**L.CENTI**	**28/06/17**	issued	**29/06/2017**
job nr.	**4607**	REV			proj. sect.	**=TW4+Q1**
serial nr.	**COM17279**	DEF			page	**22 of 114**

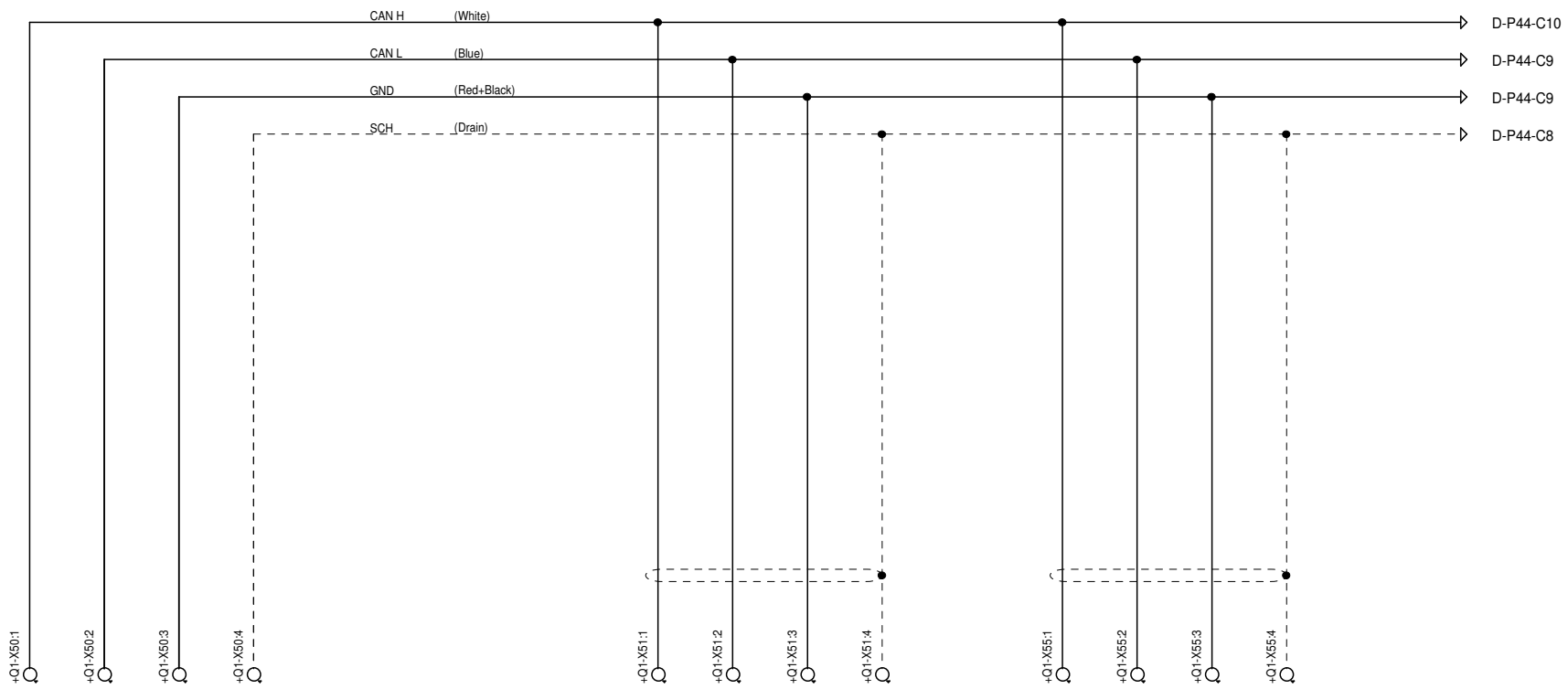

CAN OPEN NETWORK PER
COLLEGAMENTO PC

CAN OPEN NETWORK PARA
CONEXIÓN PC

RETE CAN-OPEN PER +Q2
RED CAN-OPEN PARA +Q2

FOSBER S.p.A.
via Provinciale per Camaiore, 27/28 55060 Monsagrati (Lucca) - ITALIA
T. +39.0583.3891 - F. +39.0583.389205/385567
E-mail: info@fosber.it

TWIN 400 T.1
INTERFACCIA CAN OPEN/ETH MODEM
INTERFAZ CAN OPEN/ETH MODEM

customer	**CORRUGADORA GUATEMA**	REL	**L.CENTI**	**28/06/17**	issued	**29/06/2017**
job nr.	**4607**	REV			proj. sect.	**=TW4+Q1**
serial nr.	**COM17279**	DEF			page	**23 of 114**

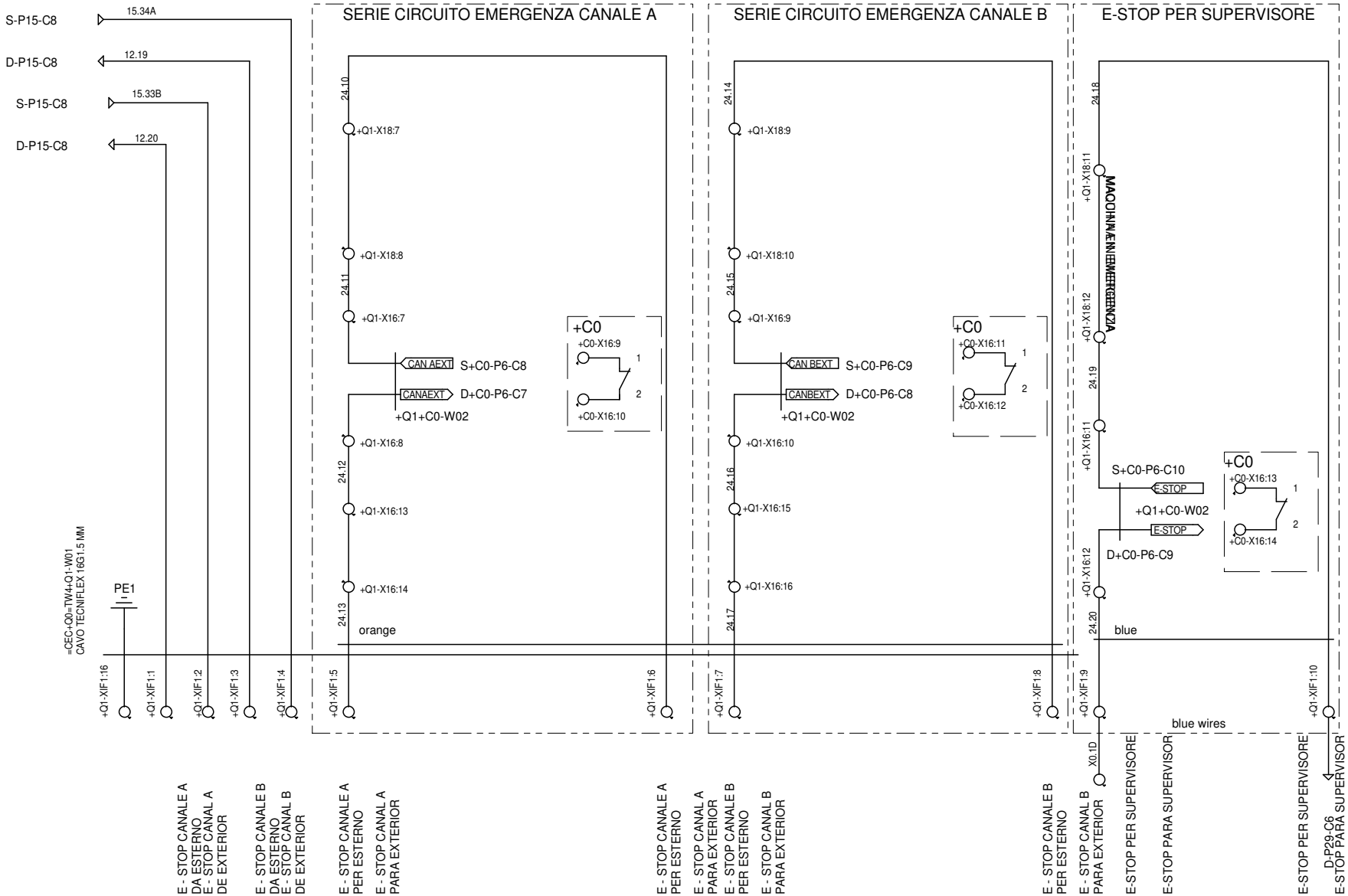

FOSBER S.p.A.
via Provinciale per Camaiore, 27/28 55060 Monsagrati (Lucca) - ITALIA
T. +39.0583.3891 - F. +39.0583.389205/385567
E-mail: info@fosber.it

TWIN 400 T.1
INTERFACCIA EMERGENZA-AUSILIARI
INTERFAZ EMERGENCIA-AUXILIARES

customer	CORRUGADORA GUATEMA	REL	L.CENTI	28/06/17	issued	29/06/2017
job nr.	4607	REV			proj. sect.	=TW4+Q1
serial nr.	COM17279	DEF			page	24 of 114

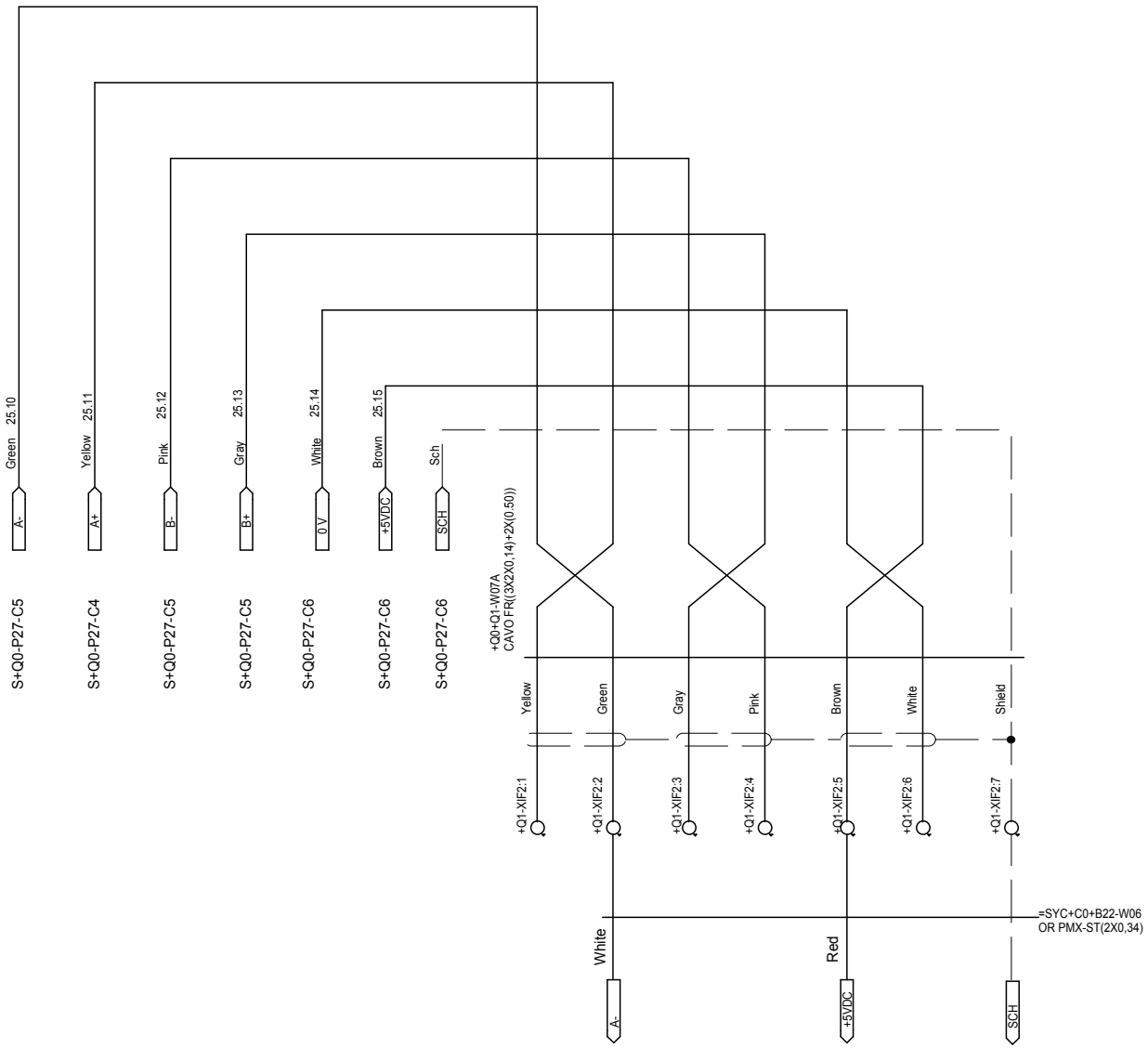

RIFERIMENTO DI VELOCITA RUOTA DI MISURA
REFERENCIA DE VELOCIDAD RUEDA DE MEDIDA

Fosber

FOSBER S.p.A.
via Provinciale per Camaiore, 27/28 55060 Monsagrati (Lucca) - ITALIA
T. +39.0583.3891 - F. +39.0583.389205/385567
E-mail: info@fosber.it

TWIN 400 T.1
RIFERIMENTO RUOTA DI MISURA
REFERENCIA RUEDA DE MEDICIÓN

customer	**CORRUGADORA GUATEMA**	REL	**L.CENTI**	**28/06/17**	issued	**29/06/2017**
job nr.	**4607**	REV			proj. sect.	**=TW4+Q1**
serial nr.	**COM17279**	DEF			page	**25 of 114**

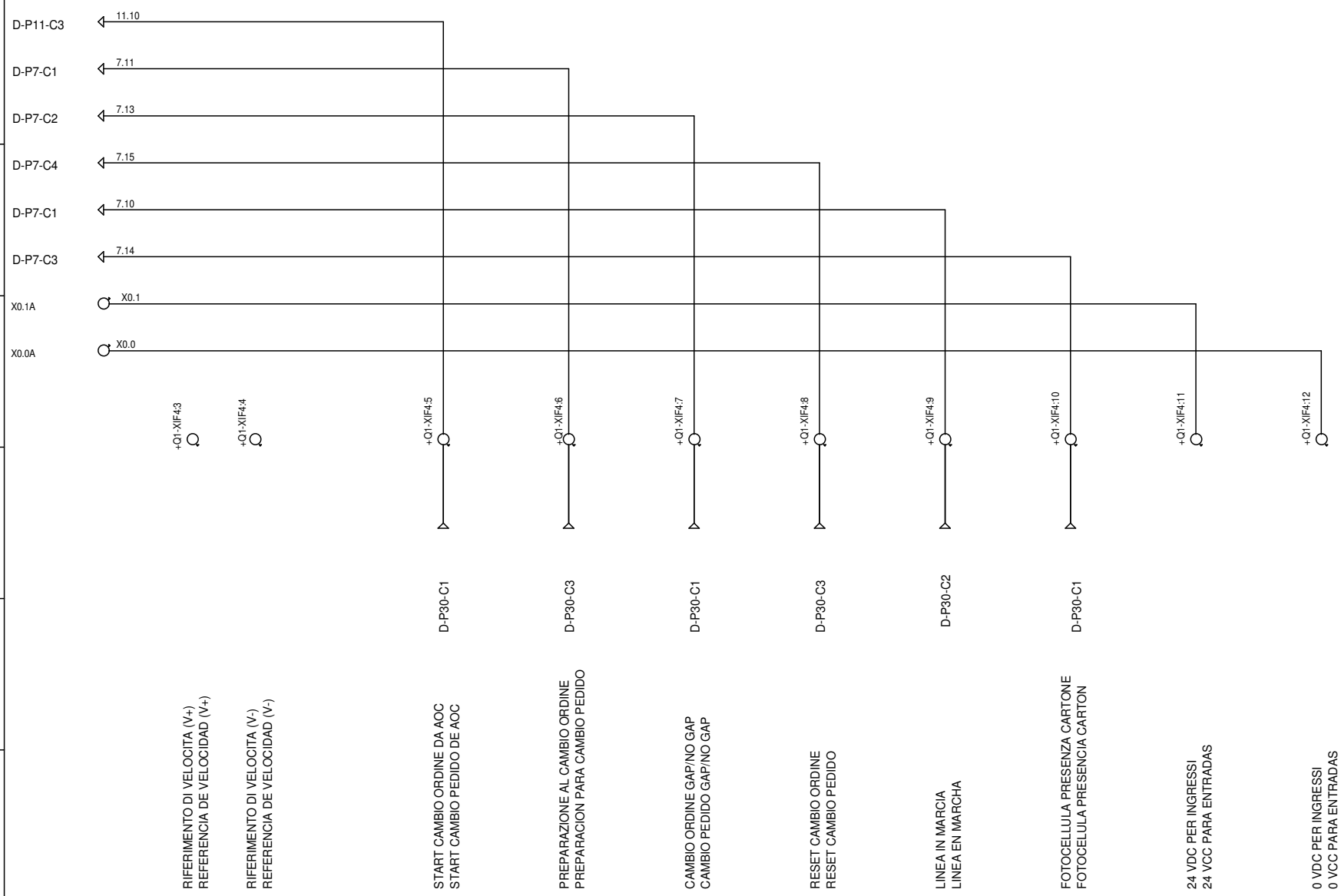

FOSBER S.p.A.
via Provinciale per Camaiore, 27/28 55060 Monsagrati (Lucca) - ITALIA
T. +39.0583.3891 - F. +39.0583.389205/385567
E-mail: info@fosber.it

TWIN 400 T.1
INTERFACCIA HD INPUT
INTERFAZ HD INPUT

customer	CORRUGADORA GUATEMA	REL	L.CENTI	28/06/17	issued	29/06/2017
job nr.	4607	REV			proj. sect.	=TW4+Q1
serial nr.	COM17279	DEF			page	26 of 114

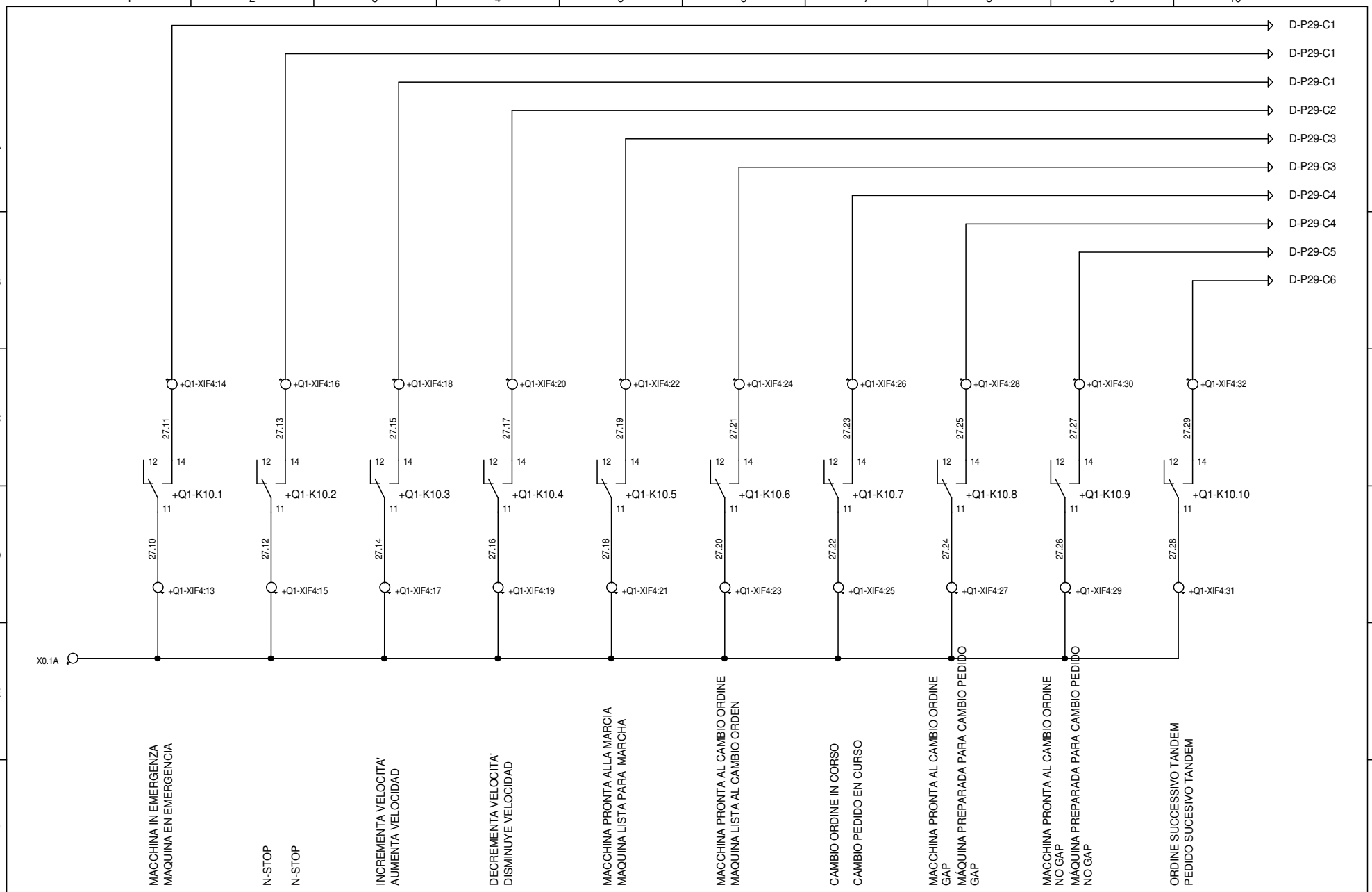

FOSBER S.p.A.
via Provinciale per Camaiore, 27/28 55060 Monsagrati (Lucca) - ITALIA
T. +39.0583.3891 - F. +39.0583.389205/385567
E-mail: info@fosber.it

TWIN 400 T.1
INTERFACCIA HD OUTPUT
INTERFAZ HD OUTPUT

customer	CORRUGADORA GUATEMA	REL	L.CENTI	28/06/17	issued	29/06/2017
job nr.	4607	REV			proj. sect.	=TW4+Q1
serial nr.	COM17279	DEF			page	27 of 114

SLITTERS SCORERS

[I/0 file revision:006]

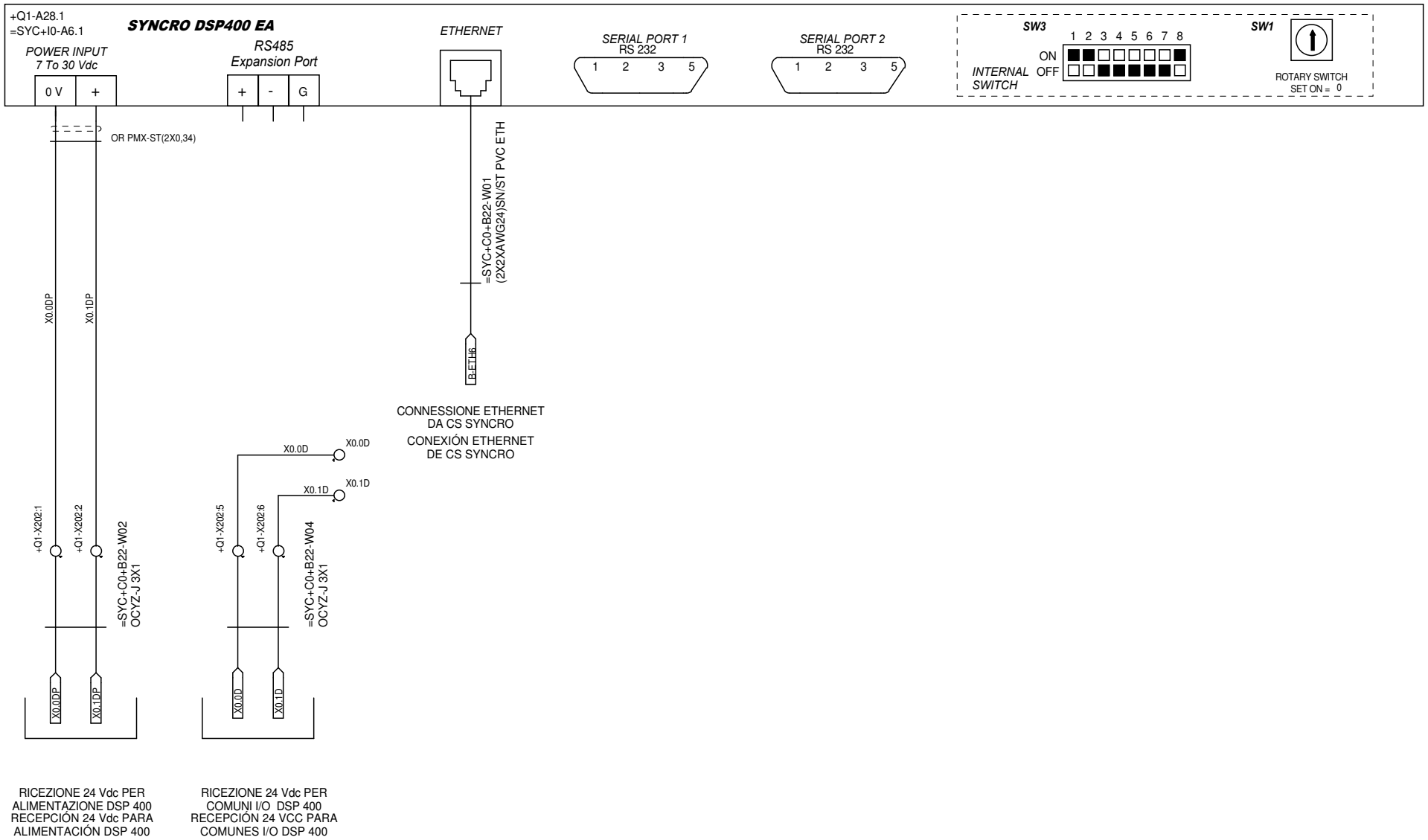

Fosber

FOSBER S.p.A.
via Provinciale per Camaiore, 27/28 55060 Monsagrati (Lucca) - ITALIA
T. +39.0583.3891 - F. +39.0583.389205/385567
E-mail: info@fosber.it

TWIN 400 T.1
INTERFACCIA CON SYNCRO
INTERFAZ CON SYNCRO

customer	CORRUGADORA GUATEMA	REL	L.CENTI	28/06/17	issued	29/06/2017
job nr.	4607	REV			proj. sect.	=TW4+Q1
serial nr.	COM17279	DEF			page	28 of 114

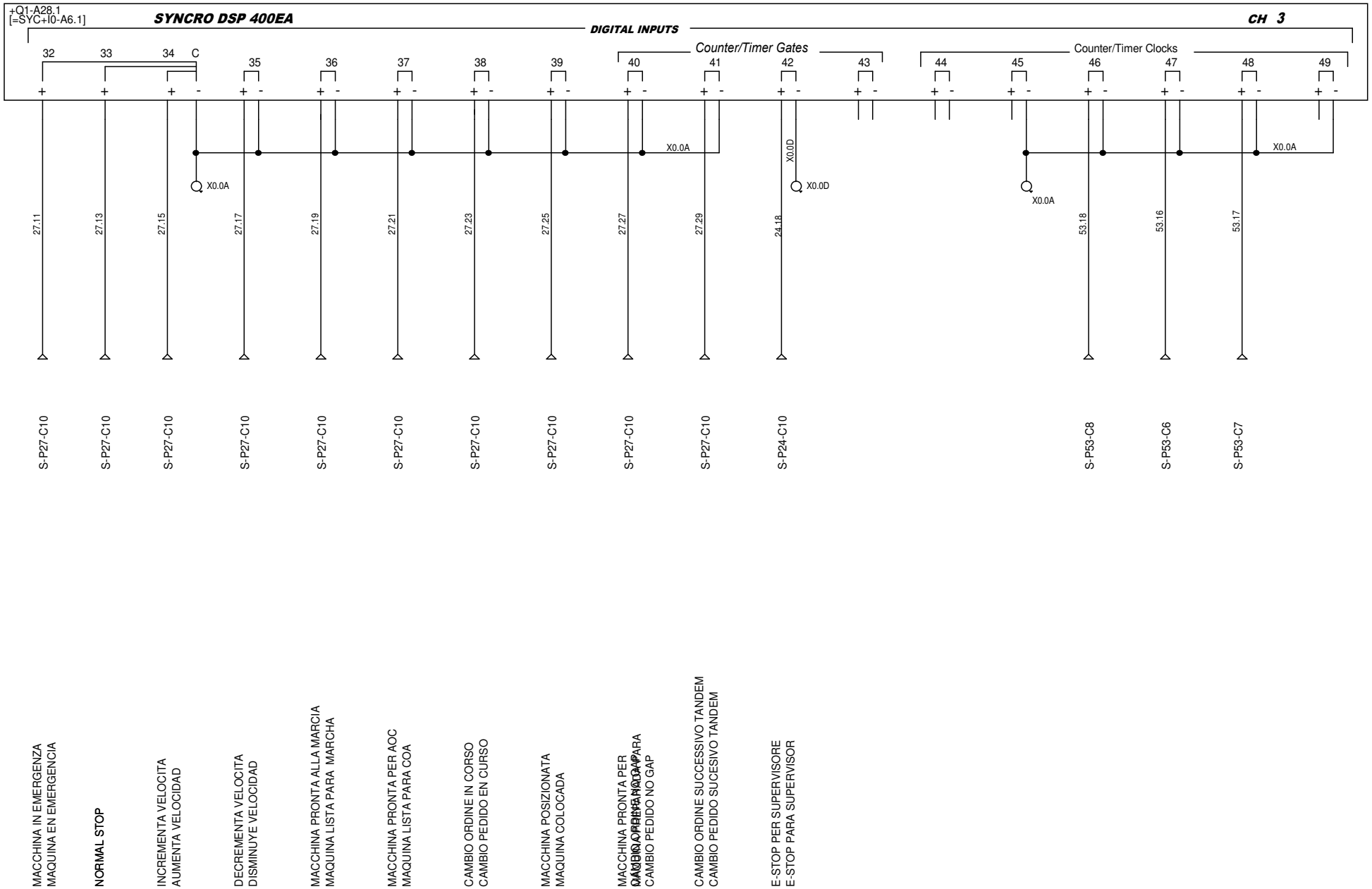

Fosber

FOSBER S.p.A.
via Provinciale per Camaiore, 27/28 55060 Monsagrati (Lucca) - ITALIA
T. +39.0583.3891 - F. +39.0583.389205/385567
E-mail: info@fosber.it

TWIN 400 T.1

INTERFACCIA CON SYNCRO IN
INTERFAZ CON SYNCRO IN

customer	CORRUGADORA GUATEMA	REL	L.CENTI	28/06/17	issued	29/06/2017
job nr.	4607	REV			proj. sect.	=TW4+Q1
serial nr.	COM17279	DEF			page	29 of 114

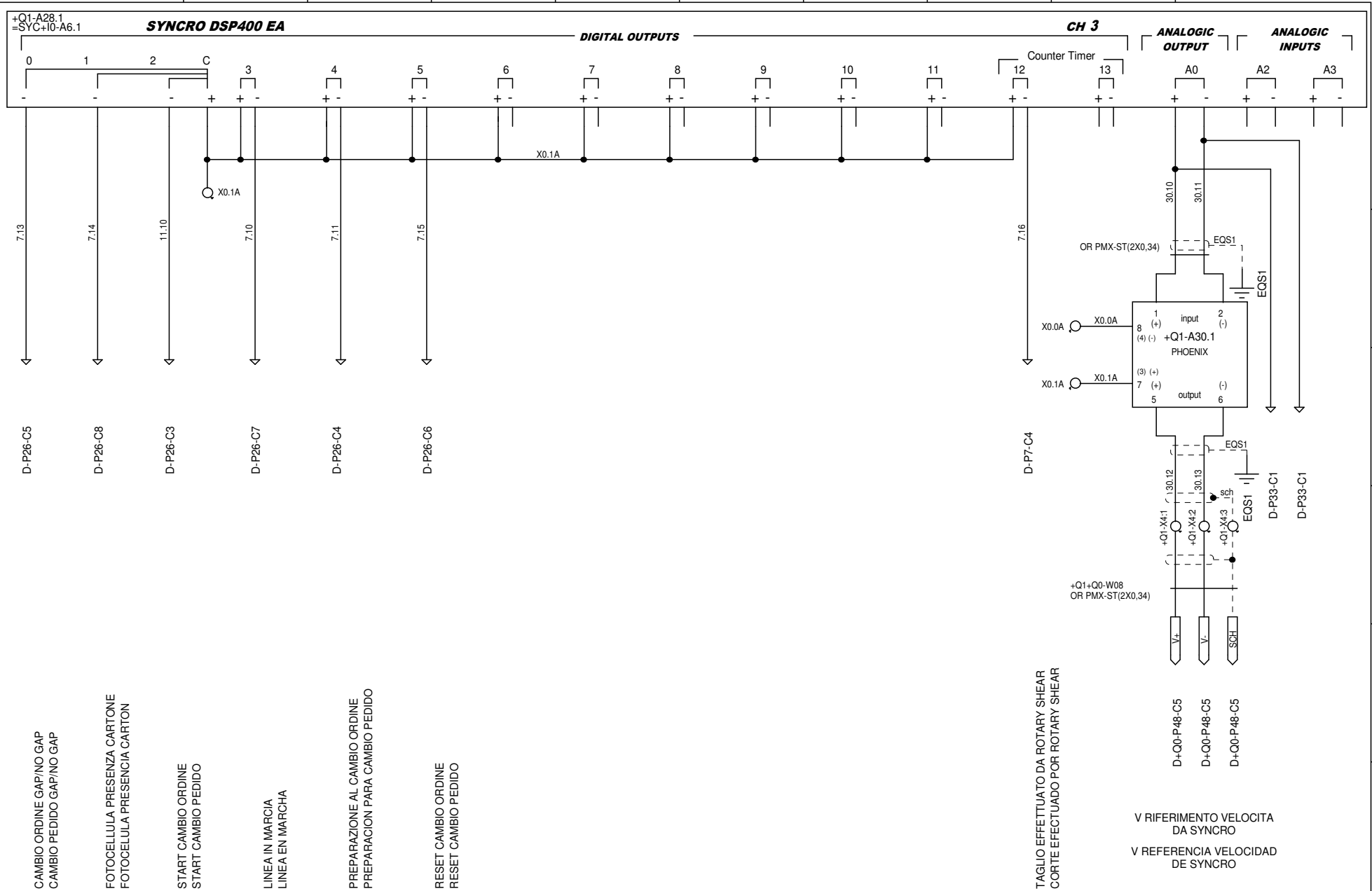

Fosber

FOSBER S.p.A.
via Provinciale per Camaiore, 27/28 55060 Monsagrati (Lucca) - ITALIA
T. +39.0583.3891 - F. +39.0583.389205/385567
E-mail: info@fosber.it

TWIN 400 T.1
INTERFACCIA CON SYNCRO OUT
INTERFAZ CON SYNCRO OUT

customer	CORRUGADORA GUATEMA	REL	L.CENTI	28/06/17	issued	29/06/2017
job nr.	4607	REV			proj. sect.	=TW4+Q1
serial nr.	COM17279	DEF			page	30 of 114

FOSBER S.p.A.
via Provinciale per Camaiore, 27/28 55060 Monsagrati (Lucca) - ITALIA
T. +39.0583.3891 - F. +39.0583.389205/385567
E-mail: info@fosber.it

TWIN 400 T.1
INTERFACCIA CON AOC IN
INTERFAZ CON AOC IN

customer	**CORRUGADORA GUATEMA**	REL	**L.CENTI**	**28/06/17**	issued	**29/06/2017**
job nr.	**4607**	REV			proj. sect.	**=TW4+Q1**
serial nr.	**COM17279**	DEF			page	**31 of 114**

FOSBER S.p.A.
via Provinciale per Camaiore, 27/28 55060 Monsagrati (Lucca) - ITALIA
T. +39.0583.3891 - F. +39.0583.389205/385567
E-mail: info@fosber.it

TWIN 400 T.1
INTERFACCIA CON AOC OUT
INTERFAZ CON AOC OUT

customer	**CORRUGADORA GUATEMA**	REL	**L.CENTI**	**28/06/17**	issued	**29/06/2017**
job nr.	**4607**	REV			proj. sect.	**=TW4+Q1**
serial nr.	**COM17279**	DEF			page	**32 of 114**

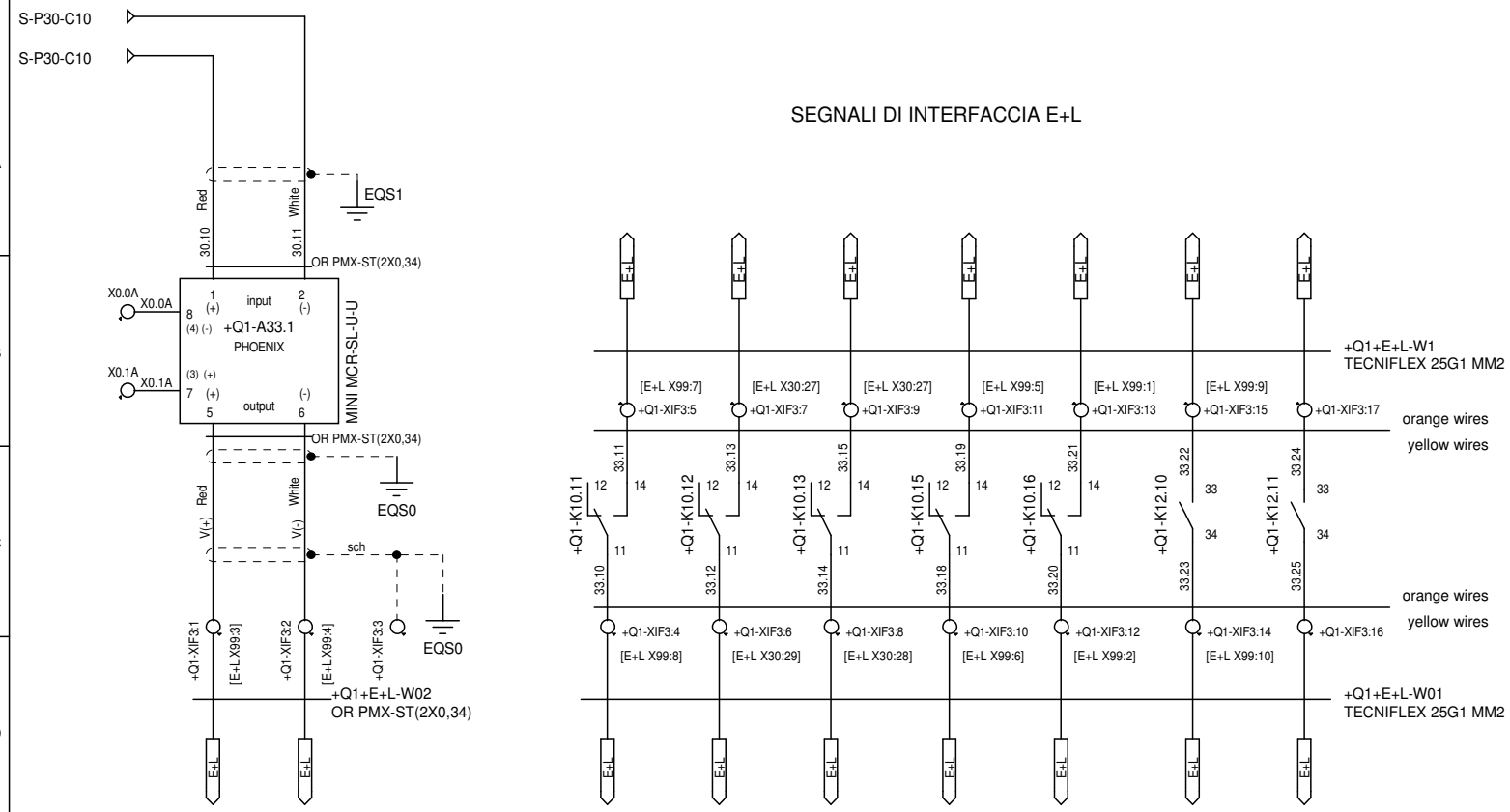

V RIFERIMENTO VELOCITA
PER E+L
V REFERENCIA VELOCIDAD
PARA E+L

TAGLIO EFFETTUATO DA
TAGLIERINA AUSILIARIA
CORTE EFECTUADO POR
GUILLOTINA AUXILIAR

SPOSTAMENTO MACCHINA SINISTRO
DESPLAZAMIENTO MÁQUINA IZQUIERDO

SPOSTAMENTO MACCHINA DESTRO
DESPLAZAMIENTO MÁQUINA DERECHO

CAMBIO ORDINE IN CORSO
CAMBIO PEDIDO EN CURSO

LINEA IN MARCIA
LINEA EN MARCHA

E-STOP PER ESTERNO
E - STOP PARA EXTERIOR

E-STOP PER ESTERNO
E - STOP PARA EXTERIOR

Fosber

FOSBER S.p.A.
via Provinciale per Camaiore, 27/28 55060 Monsagrati (Lucca) - ITALIA
T. +39.0583.3891 - F. +39.0583.389205/385567
E-mail: info@fosber.it

TWIN 400 T.1
INTERFACCIA E+L
INTERFAZ E+L

customer	**CORRUGADORA GUATEMA**	REL	**L.CENTI**	**28/06/17**	issued	**29/06/2017**
job nr.	**4607**	REV			proj. sect.	**=TW4+Q1**
serial nr.	**COM17279**	DEF			page	**33 of 114**

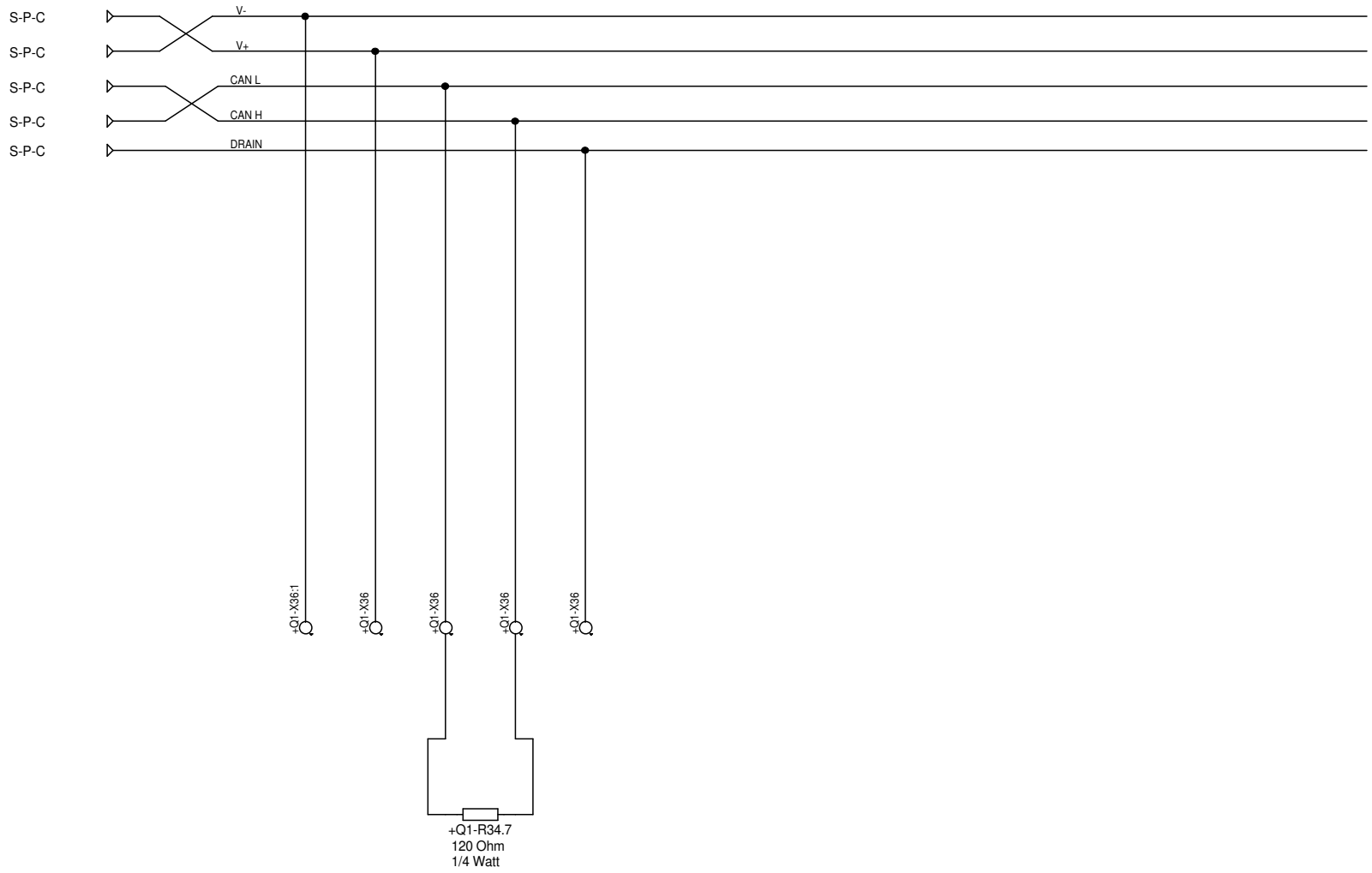

FOSBER S.p.A.
via Provinciale per Camaiore, 27/28 55060 Monsagrati (Lucca) - ITALIA
T. +39.0583.3891 - F. +39.0583.389205/385567
E-mail: info@fosber.it

TWIN 400 T.1
DEVICE NET NETWORK
DEVICE NET NETWORK

customer	**CORRUGADORA GUATEMA**	REL	**L.CENTI**	**28/06/17**	issued	**29/06/2017**
job nr.	**4607**	REV			proj. sect.	**=TW4+Q1**
serial nr.	**COM17279**	DEF			page	**34 of 114**

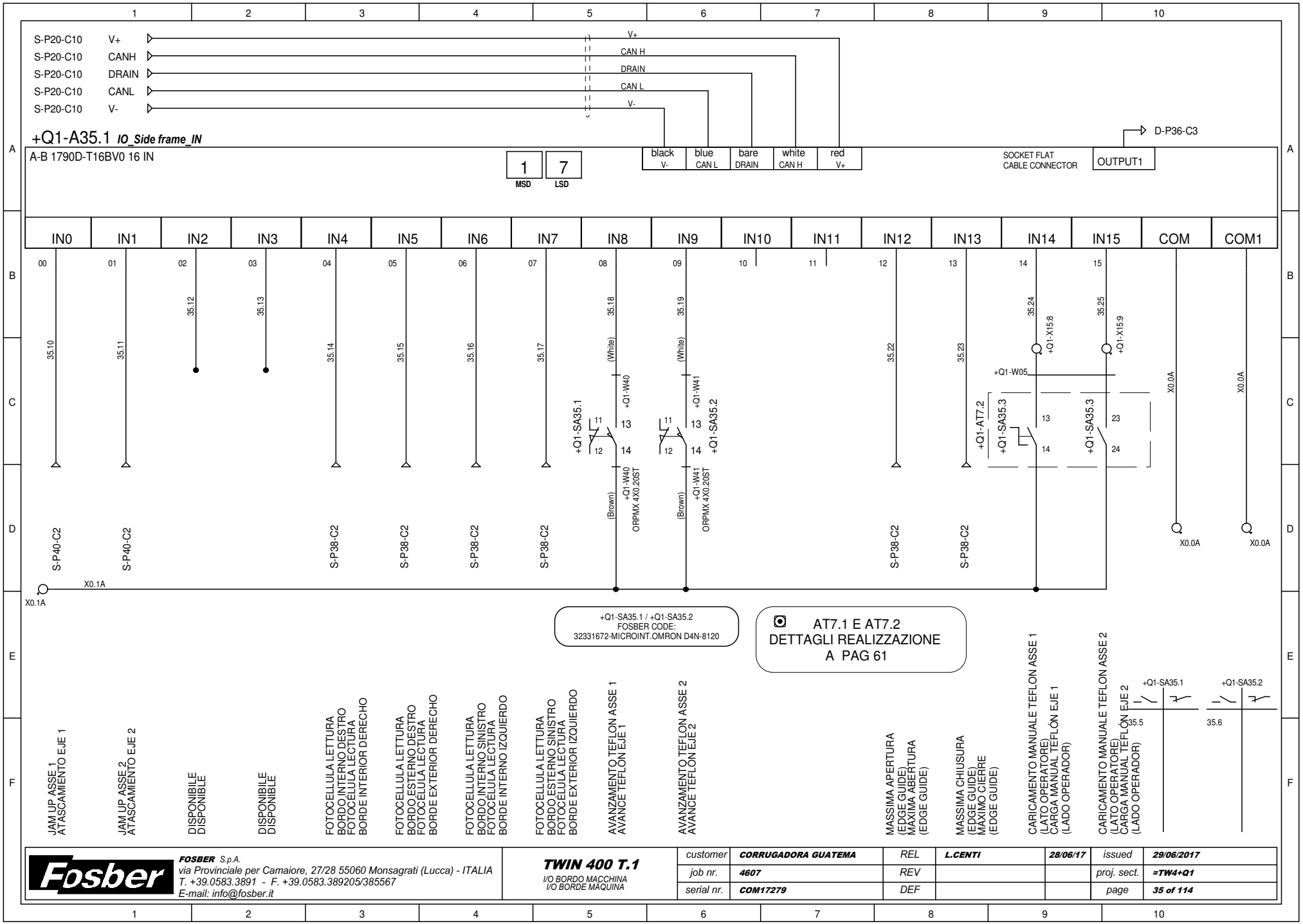
S-P20-C10 V+
S-P20-C10 CANH
S-P20-C10 DRAIN
S-P20-C10 CANL
S-P20-C10 V-
V+
CAN H
DRAIN
CAN L
V-
+Q1-A35.1 IO_Side frame_IN
A-B 1790D-T16BV0 16 IN
1 MSD
7 LSD
black V-
blue CAN L
bare DRAIN
white CAN H
red V+
SOCKET FLAT CABLE CONNECTOR
OUTPUT1
D-P36-C3
IN0 IN1 IN2 IN3 IN4 IN5 IN6 IN7 IN8 IN9 IN10 IN11 IN12 IN13 IN14 IN15 COM COM1
35.10 35.11 35.12 35.13 35.14 35.15 35.16 35.17 35.18 35.19 35.22 35.23 35.24 35.25
(White)
(Brown)
+Q1-W40
+Q1-W41
ORPMX 4X0.20ST
+Q1-SA35.1
+Q1-SA35.2
+Q1-X15:8
+Q1-X15:9
+Q1-W05
+Q1-AT7.2
+Q1-SA35.3
X0.0A
S-P40-C2
S-P38-C2
X0.1A
+Q1-SA35.1 / +Q1-SA35.2
FOSBER CODE:
32331672-MICROINT.OMRON D4N-8120
AT7.1 E AT7.2
DETTAGLI REALIZZAZIONE
A PAG 61
JAM UP ASSE 1 ATASCAMIENTO EJE 1
JAM UP ASSE 2 ATASCAMIENTO EJE 2
DISPONIBILE DISPONIBLE
FOTOCELLULA LETTURA BORDO INTERNO DESTRO FOTOCELULA LECTURA BORDE INTERIOR DERECHO
FOTOCELLULA LETTURA BORDO ESTERNO DESTRO FOTOCELULA LECTURA BORDE EXTERIOR DERECHO
FOTOCELLULA LETTURA BORDO INTERNO SINISTRO FOTOCELULA LECTURA BORDE INTERNO IZQUIERDO
FOTOCELLULA LETTURA BORDO ESTERNO SINISTRO FOTOCELULA LECTURA BORDE EXTERIOR IZQUIERDO
AVANZAMENTO TEFLON ASSE 1 AVANCE TEFLÓN EJE 1
AVANZAMENTO TEFLON ASSE 2 AVANCE TEFLÓN EJE 2
MASSIMA APERTURA (EDGE GUIDE) MAXIMA ABERTURA (EDGE GUIDE)
MASSIMA CHIUSURA (EDGE GUIDE) MAXIMO CIERRE (EDGE GUIDE)
CARICAMENTO MANUALE TEFLON ASSE 1 (LATO OPERATORE) CARGA MANUAL TEFLÓN EJE 1 (LADO OPERADOR)
CARICAMENTO MANUALE TEFLON ASSE 2 (LATO OPERATORE) CARGA MANUAL TEFLÓN EJE 2 (LADO OPERADOR)
35.5
35.6
Fosber
FOSBER S.p.A.
via Provinciale per Camaiore, 27/28 55060 Monsagrati (Lucca) - ITALIA
T. +39.0583.3891 - F. +39.0583.389205/385567
E-mail: info@fosber.it
TWIN 400 T.1
I/O BORDO MACCHINA
I/O BORDE MÁQUINA
customer CORRUGADORA GUATEMA
job nr. 4607
serial nr. COM17279
REL L.CENTI 28/06/17
REV
DEF
issued 29/06/2017
proj. sect. =TW4+Q1
page 35 of 114

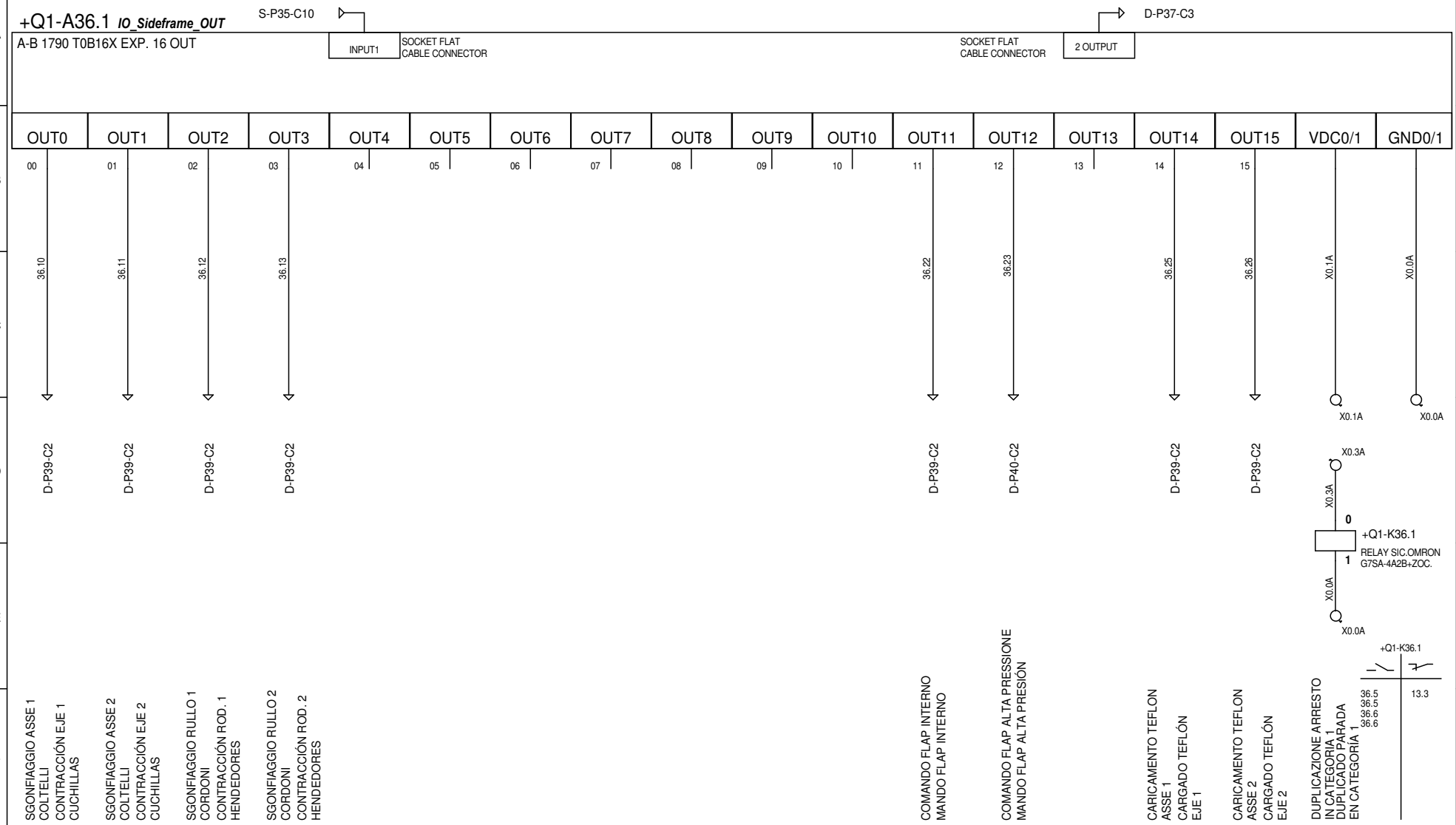

Fosber
FOSBER S.p.A.
via Provinciale per Camaiore, 27/28 55060 Monsagrati (Lucca) - ITALIA
T. +39.0583.3891 - F. +39.0583.389205/385567
E-mail: info@fosber.it

TWIN 400 T.1
I/O BORDO MACCHINA
I/O BORDE MAQUINA

customer	CORRUGADORA GUATEMA	REL	L.CENTI	28/06/17	issued	29/06/2017
job nr.	4607	REV			proj. sect.	=TW4+Q1
serial nr.	COM17279	DEF			page	36 of 114

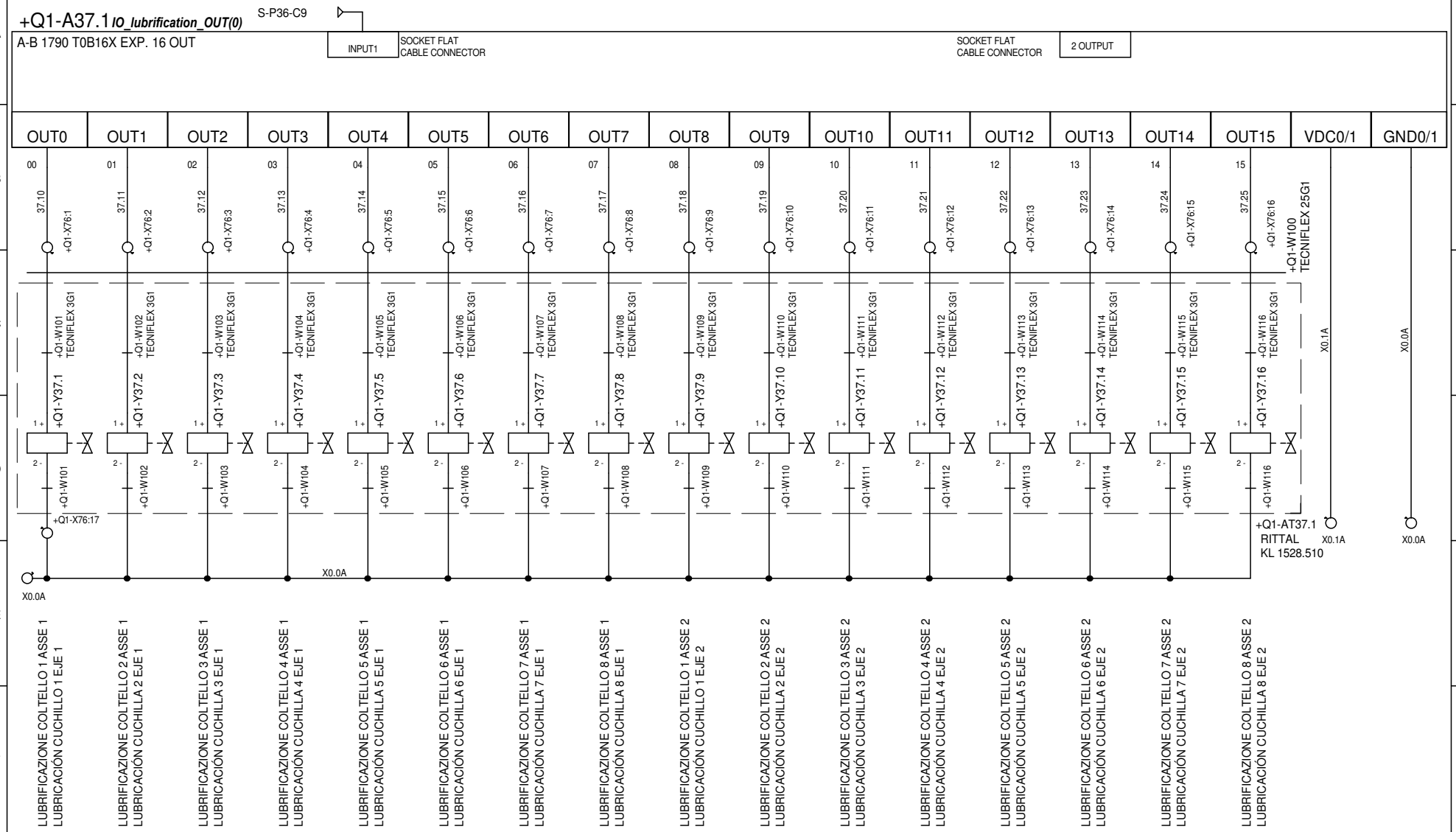

Fosber
FOSBER S.p.A.
via Provinciale per Camaiore, 27/28 55060 Monsagrati (Lucca) - ITALIA
T. +39.0583.3891 - F. +39.0583.389205/385567
E-mail: info@fosber.it

TWIN 400 T.1

PAGINA LASCIATA VUOTA
PÁGINA DEJADA EN BLANCO

customer	CORRUGADORA GUATEMA	REL	L.CENTI	28/06/17	issued	29/06/2017
job nr.	4607	REV			proj. sect.	=TW4+Q1
serial nr.	COM17279	DEF			page	37 of 114

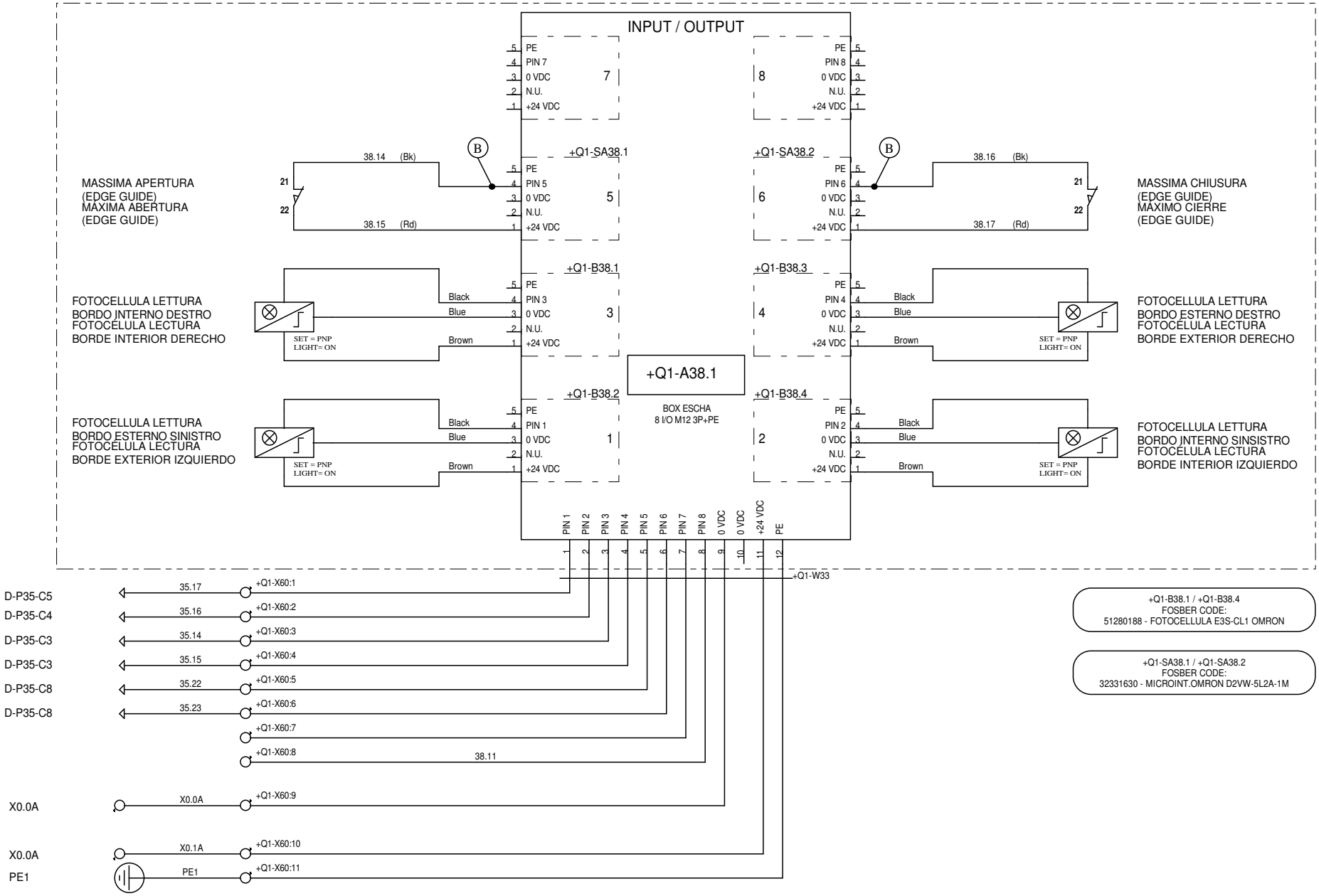

FOSBER S.p.A.
via Provinciale per Camaiore, 27/28 55060 Monsagrati (Lucca) - ITALIA
T. +39.0583.3891 - F. +39.0583.389205/385567
E-mail: info@fosber.it

TWIN 400 T.1
CONNESSIONE EDGE GUIDE
CONEXIÓN EDGE GUIDE

customer	CORRUGADORA GUATEMA	REL	L.CENTI	28/06/17	issued	29/06/2017
job nr.	4607	REV			proj. sect.	=TW4+Q1
serial nr.	COM17279	DEF			page	38 of 114

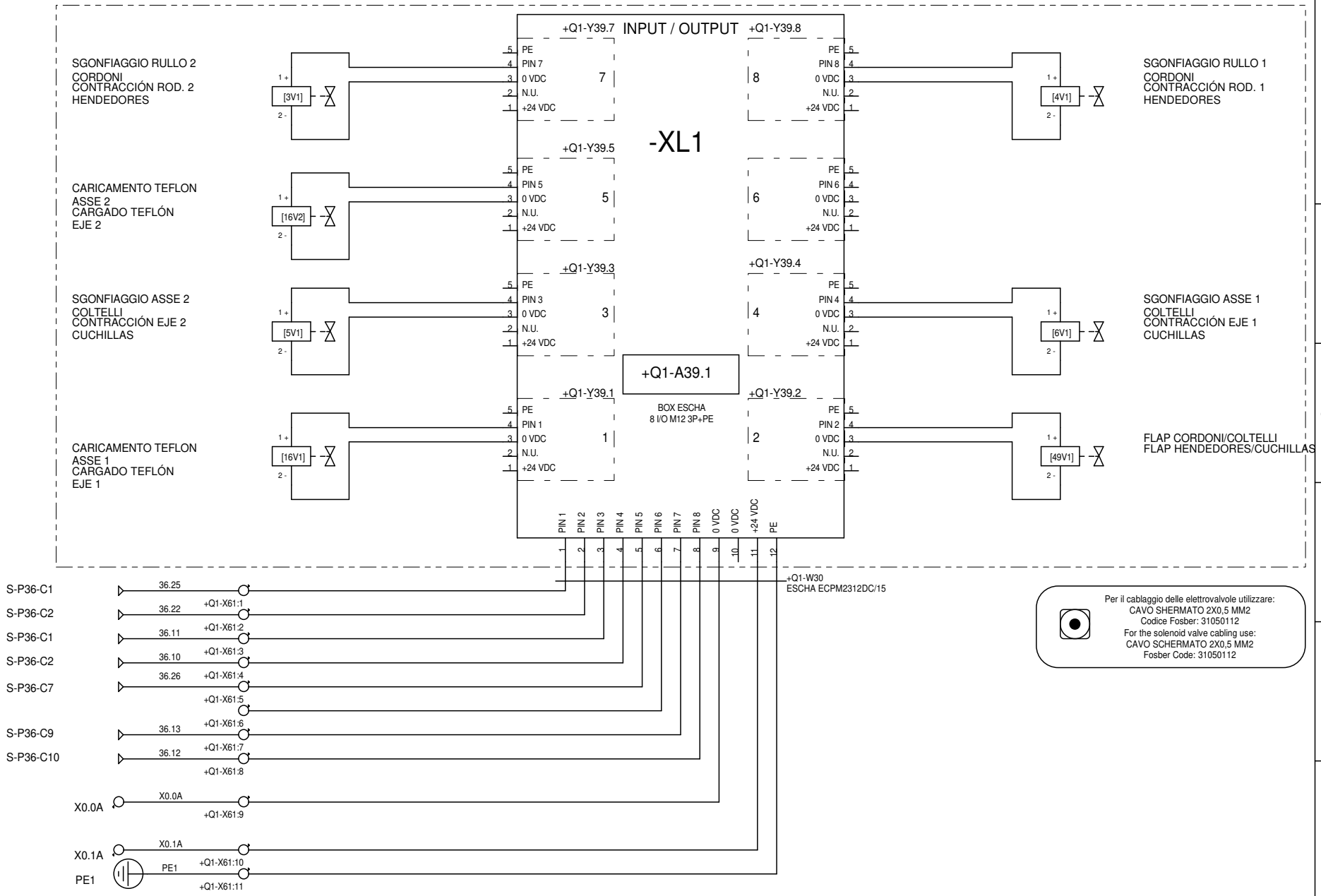

FOSBER S.p.A.
via Provinciale per Camaiore, 27/28 55060 Monsagrati (Lucca) - ITALIA
T. +39.0583.3891 - F. +39.0583.389205/385567
E-mail: info@fosber.it

TWIN 400 T.1
MORSETTIERA PASSIVA -XL1
TABLERO DE BORNES PASIVO -XL1

customer	CORRUGADORA GUATEMA	REL	L.CENTI	28/06/17	issued	29/06/2017
job nr.	4607	REV			proj. sect.	=TW4+Q1
serial nr.	COM17279	DEF			page	39 of 114

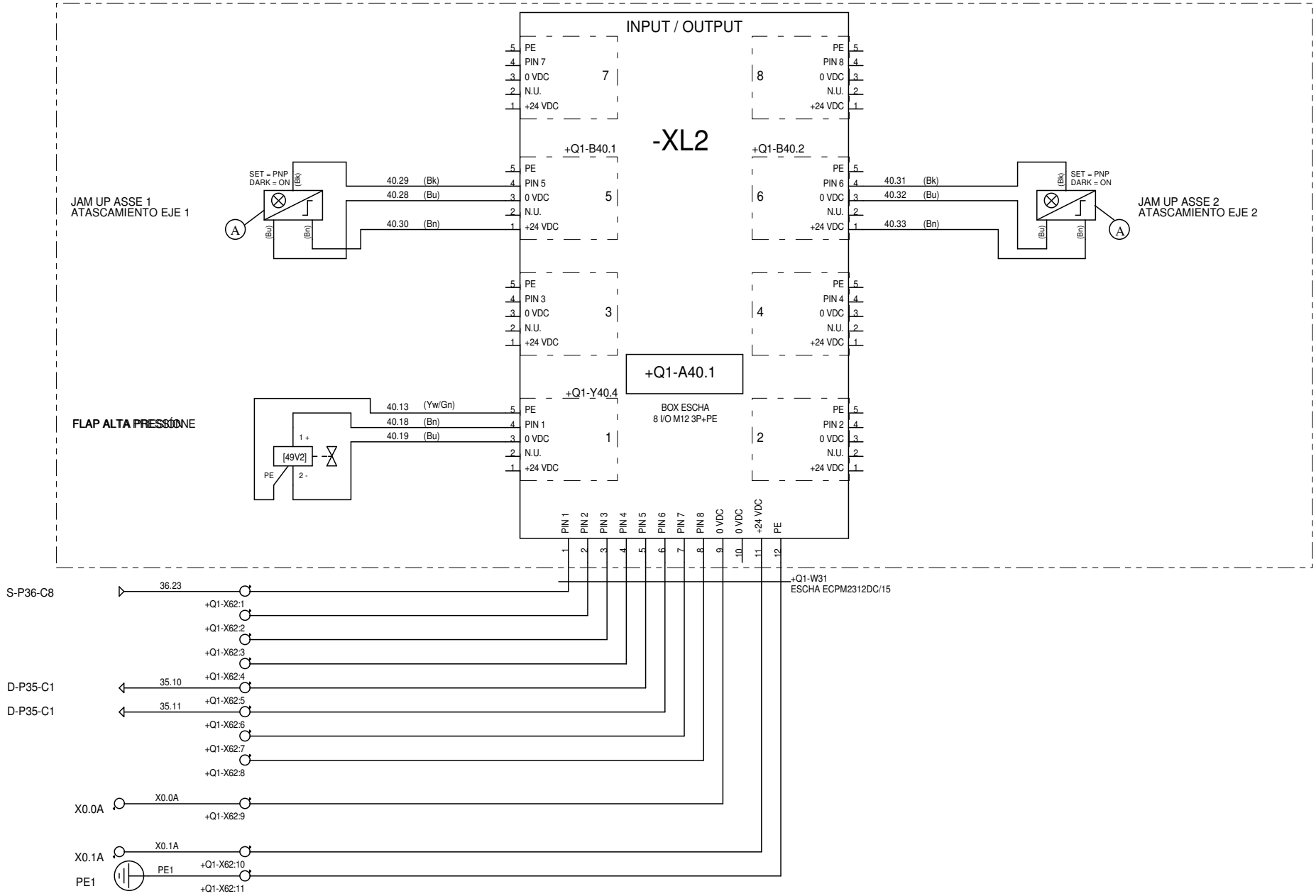

FOSBER S.p.A.
via Provinciale per Camaiore, 27/28 55060 Monsagrati (Lucca) - ITALIA
T. +39.0583.3891 - F. +39.0583.389205/385567
E-mail: info@fosber.it

TWIN 400 T.1
MORSETTIERA PASSIVA -XL2
TABLERO DE BORNES PASIVO -XL2

customer	CORRUGADORA GUATEMA	REL	L.CENTI	28/06/17	issued	29/06/2017
job nr.	4607	REV			proj. sect.	=TW4+Q1
serial nr.	COM17279	DEF			page	40 of 114

FOSBER S.p.A.
via Provinciale per Camaiore, 27/28 55060 Monsagrati (Lucca) - ITALIA
T. +39.0583.3891 - F. +39.0583.389205/385567
E-mail: info@fosber.it

TWIN 400 T.1

PAGINA INTENZIONALMENTE VUOTA
PAGINA INTENCIONALMENTE VACÍA

customer	**CORRUGADORA GUATEMA**	REL	**L.CENTI**	**28/06/17**	issued	**29/06/2017**
job nr.	**4607**	REV			proj. sect.	**=TW4+Q1**
serial nr.	**COM17279**	DEF			page	**41 of 114**

FOSBER S.p.A.
via Provinciale per Camaiore, 27/28 55060 Monsagrati (Lucca) - ITALIA
T. +39.0583.3891 - F. +39.0583.389205/385567
E-mail: info@fosber.it

TWIN 400 T.1

PAGINA INTENZIONALMENTE VUOTA
PAGINA INTENCIONALMENTE VACÍA

customer	**CORRUGADORA GUATEMA**	REL	**L.CENTI**	**28/06/17**	issued	**29/06/2017**
job nr.	**4607**	REV			proj. sect.	**=TW4+Q1**
serial nr.	**COM17279**	DEF			page	**42 of 114**

CONNECT ALL MODULE

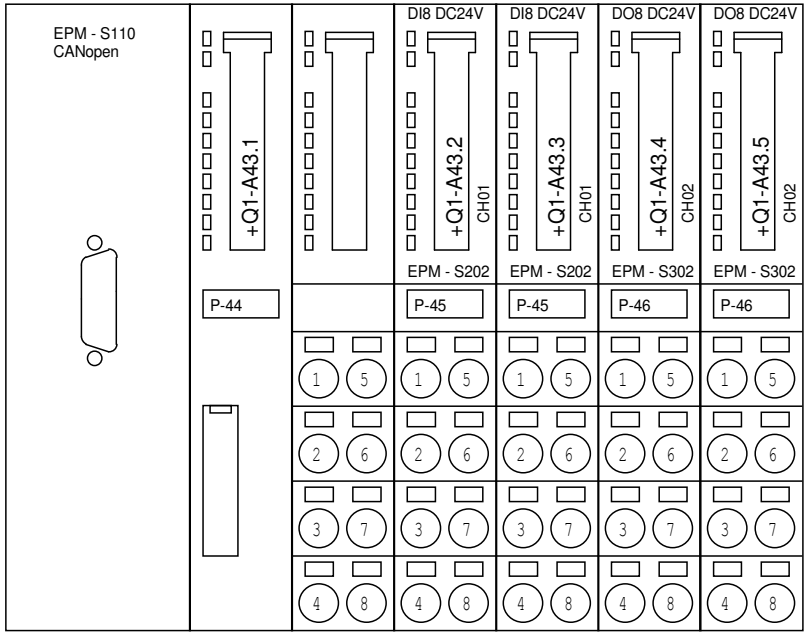

FOSBER S.p.A.
via Provinciale per Camaiore, 27/28 55060 Monsagrati (Lucca) - ITALIA
T. +39.0583.3891 - F. +39.0583.389205/385567
E-mail: info@fosber.it

TWIN 400 T.1
CONFIGURAZIONE PLC
CONFIGURACIÓN PLC

customer	**CORRUGADORA GUATEMA**	REL	**L.CENTI**	**28/06/17**	issued	**29/06/2017**
job nr.	**4607**	REV			proj. sect.	**=TW4+Q1**
serial nr.	**COM17279**	DEF			page	**43 of 114**

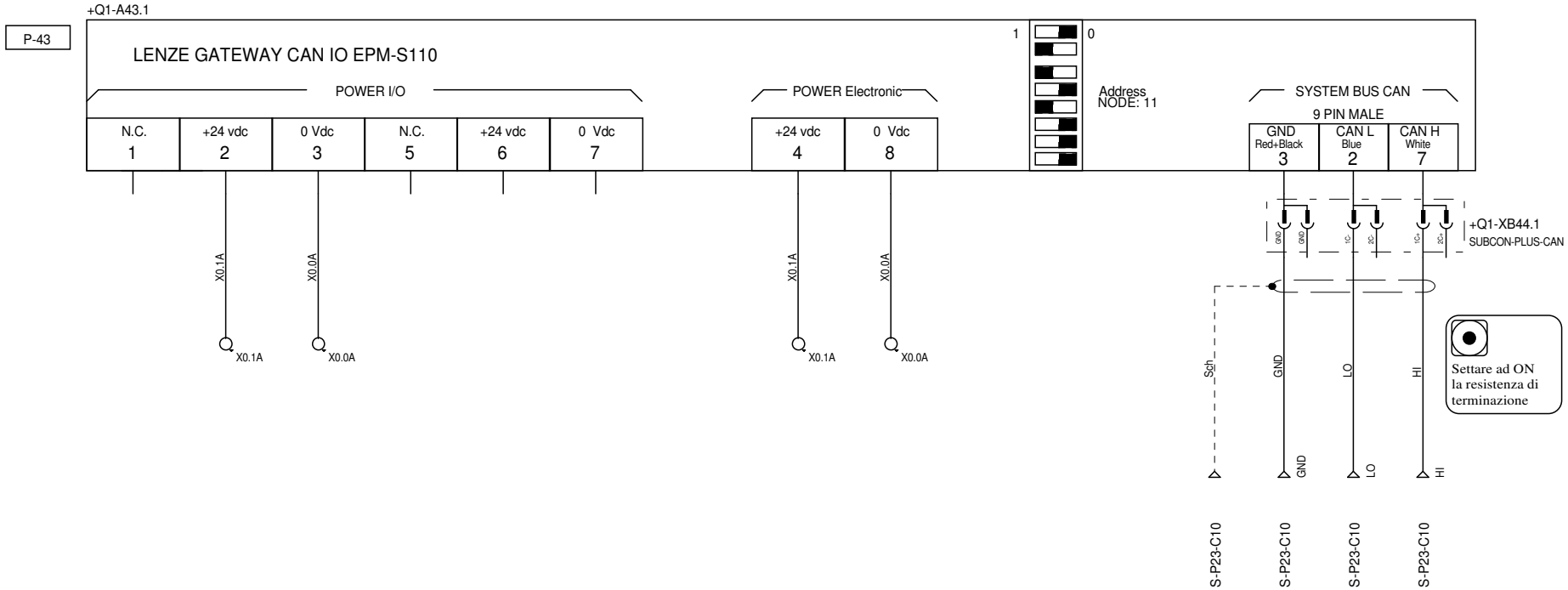

FOSBER S.p.A.
via Provinciale per Camaiore, 27/28 55060 Monsagrati (Lucca) - ITALIA
T. +39.0583.3891 - F. +39.0583.389205/385567
E-mail: info@fosber.it

TWIN 400 T.1
GATEWAY CAN OPEN
GATEWAY CAN OPEN

customer	CORRUGADORA GUATEMA	REL	L.CENTI	28/06/17	issued	29/06/2017
job nr.	4607	REV			proj. sect.	=TW4+Q1
serial nr.	COM17279	DEF			page	44 of 114

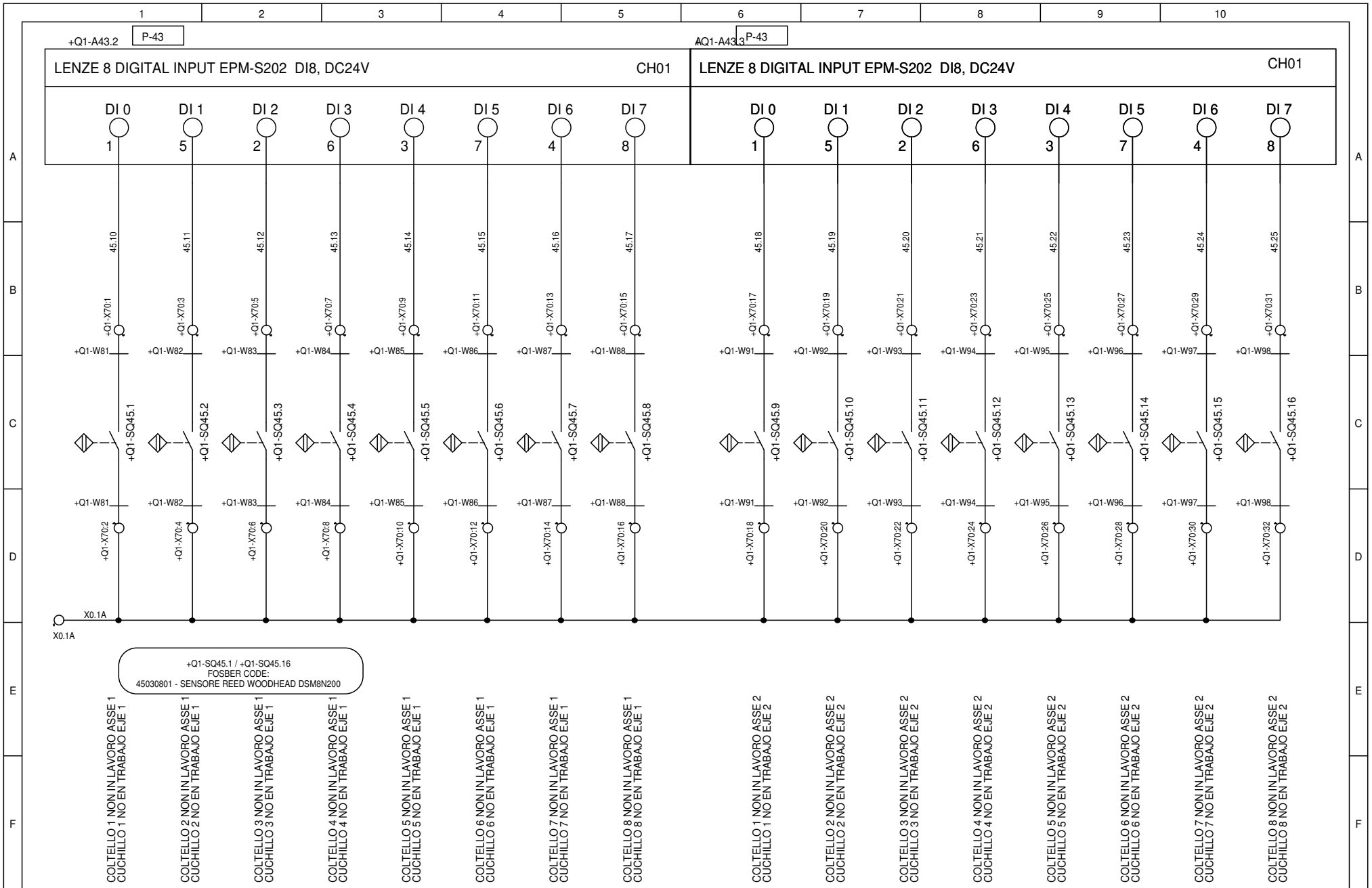

Fosber

FOSBER S.p.A.
via Provinciale per Camaiore, 27/28 55060 Monsagrati (Lucca) - ITALIA
T. +39.0583.3891 - F. +39.0583.389205/385567
E-mail: info@fosber.it

TWIN 400 T.1

SENSORI COLTELLI ASSE 1/2
SENSORES CUCHILLOS EJE 1/2

customer	**CORRUGADORA GUATEMA**	REL	**L.CENTI**	**28/06/17**	issued	**29/06/2017**
job nr.	**4607**	REV			proj. sect.	**=TW4+Q1**
serial nr.	**COM17279**	DEF			page	**45 of 114**

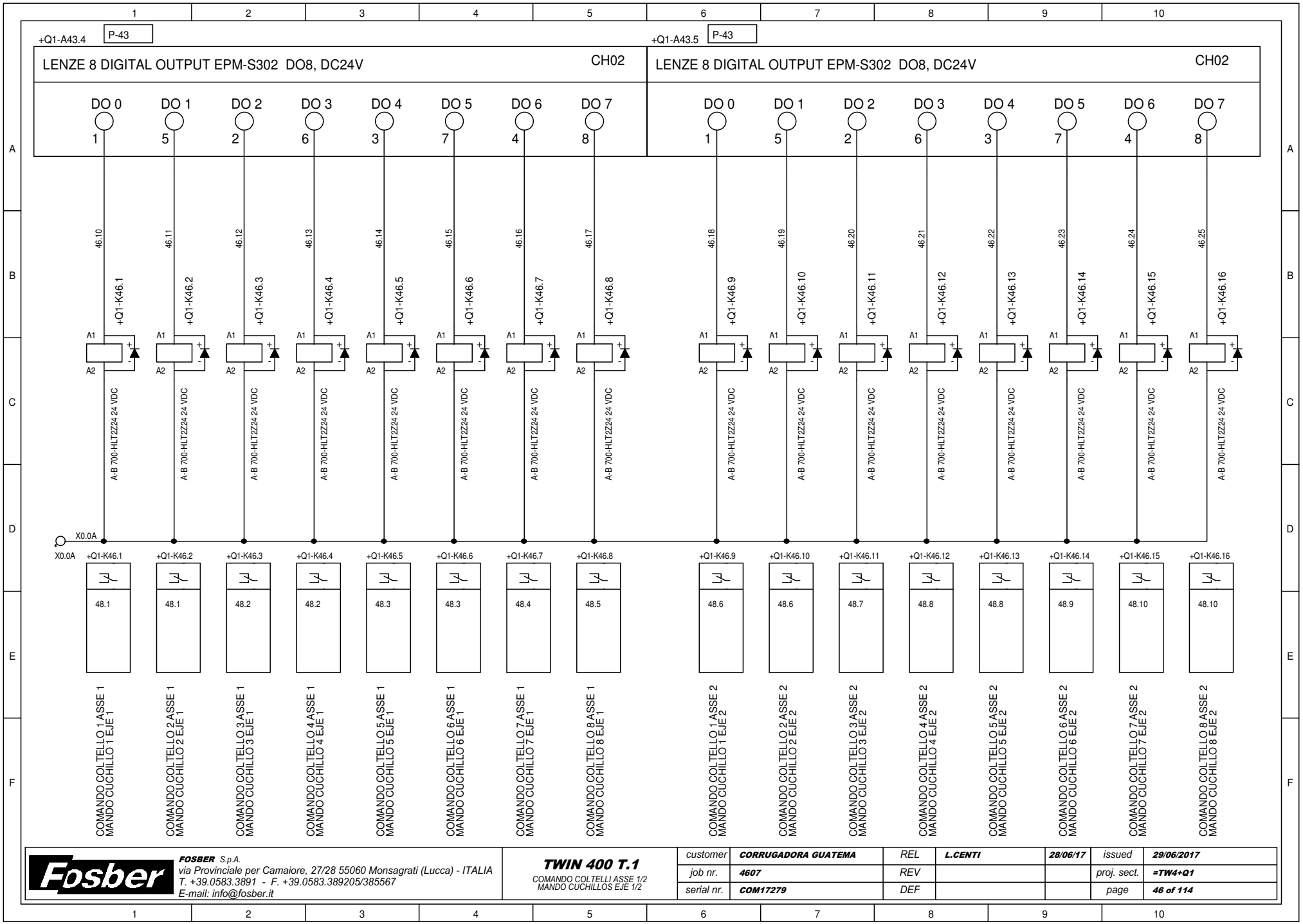
+Q1-A43.4
P-43
LENZE 8 DIGITAL OUTPUT EPM-S302 DO8, DC24V
CH02
+Q1-A43.5
P-43
LENZE 8 DIGITAL OUTPUT EPM-S302 DO8, DC24V
CH02
DO 0 DO 1 DO 2 DO 3 DO 4 DO 5 DO 6 DO 7
1 5 2 6 3 7 4 8
46.10 46.11 46.12 46.13 46.14 46.15 46.16 46.17
46.18 46.19 46.20 46.21 46.22 46.23 46.24 46.25
+Q1-K46.1 +Q1-K46.2 +Q1-K46.3 +Q1-K46.4 +Q1-K46.5 +Q1-K46.6 +Q1-K46.7 +Q1-K46.8
+Q1-K46.9 +Q1-K46.10 +Q1-K46.11 +Q1-K46.12 +Q1-K46.13 +Q1-K46.14 +Q1-K46.15 +Q1-K46.16
A1
A2
A-B 700-HLT2Z24 24 VDC
X0.0A
X0.0A
48.1 48.1 48.2 48.2 48.3 48.3 48.4 48.5
48.6 48.6 48.7 48.8 48.8 48.9 48.10 48.10
COMANDO COLTELLO 1 ASSE 1
MANDO CUCHILLO 1 EJE 1
COMANDO COLTELLO 2 ASSE 1
MANDO CUCHILLO 2 EJE 1
COMANDO COLTELLO 3 ASSE 1
MANDO CUCHILLO 3 EJE 1
COMANDO COLTELLO 4 ASSE 1
MANDO CUCHILLO 4 EJE 1
COMANDO COLTELLO 5 ASSE 1
MANDO CUCHILLO 5 EJE 1
COMANDO COLTELLO 6 ASSE 1
MANDO CUCHILLO 6 EJE 1
COMANDO COLTELLO 7 ASSE 1
MANDO CUCHILLO 7 EJE 1
COMANDO COLTELLO 8 ASSE 1
MANDO CUCHILLO 8 EJE 1
COMANDO COLTELLO 1 ASSE 2
MANDO CUCHILLO 1 EJE 2
COMANDO COLTELLO 2 ASSE 2
MANDO CUCHILLO 2 EJE 2
COMANDO COLTELLO 3 ASSE 2
MANDO CUCHILLO 3 EJE 2
COMANDO COLTELLO 4 ASSE 2
MANDO CUCHILLO 4 EJE 2
COMANDO COLTELLO 5 ASSE 2
MANDO CUCHILLO 5 EJE 2
COMANDO COLTELLO 6 ASSE 2
MANDO CUCHILLO 6 EJE 2
COMANDO COLTELLO 7 ASSE 2
MANDO CUCHILLO 7 EJE 2
COMANDO COLTELLO 8 ASSE 2
MANDO CUCHILLO 8 EJE 2
Fosber
FOSBER S.p.A.
via Provinciale per Camaiore, 27/28 55060 Monsagrati (Lucca) - ITALIA
T. +39.0583.3891 - F. +39.0583.389205/385567
E-mail: info@fosber.it
TWIN 400 T.1
COMANDO COLTELLI ASSE 1/2
MANDO CUCHILLOS EJE 1/2
customer CORRUGADORA GUATEMA
REL L.CENTI
28/06/17
issued 29/06/2017
job nr. 4607
REV
proj. sect. =TW4+Q1
serial nr. COM17279
DEF
page 46 of 114

FOSBER S.p.A.
via Provinciale per Camaiore, 27/28 55060 Monsagrati (Lucca) - ITALIA
T. +39.0583.3891 - F. +39.0583.389205/385567
E-mail: info@fosber.it

TWIN 400 T.1
COMANDO 9 COLTELLO ASSE 1/2
MANDO 9 CUCHILLO EJE 1/2

customer	**CORRUGADORA GUATEMA**	REL	**L.CENTI**	**28/06/17**	issued	**29/06/2017**
job nr.	**4607**	REV			proj. sect.	**=TW4+Q1**
serial nr.	**COM17279**	DEF			page	**47 of 114**

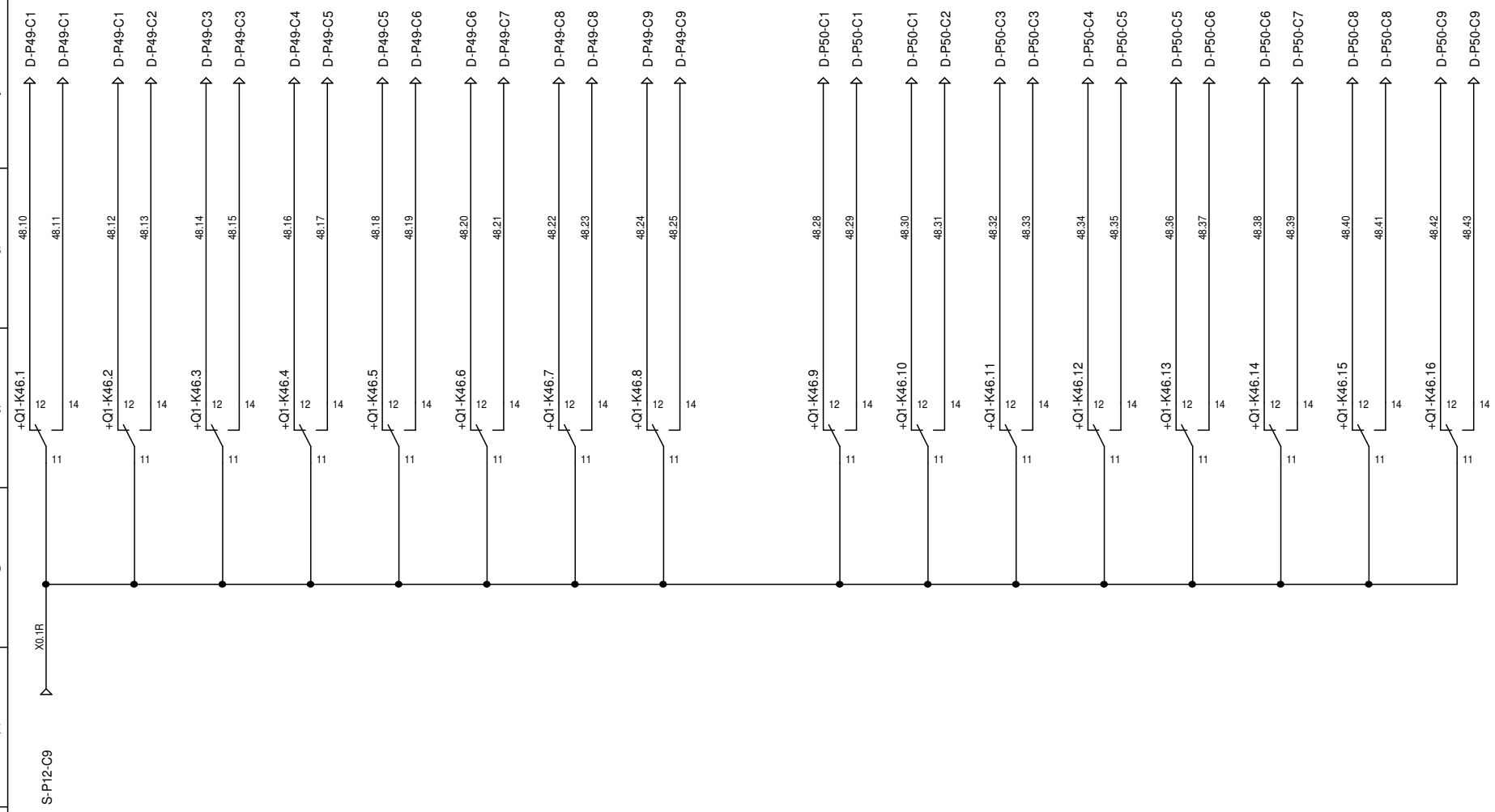

FOSBER S.p.A.
via Provinciale per Camaiore, 27/28 55060 Monsagrati (Lucca) - ITALIA
T. +39.0583.3891 - F. +39.0583.389205/385567
E-mail: info@fosber.it

TWIN 400 T.1
COMANDO ELETTROVALVOLE COLTELLI
MANDO ELECTROVÁLVULAS CUCHILLOS

customer	CORRUGADORA GUATEMA	REL	L.CENTI	28/06/17	issued	29/06/2017
job nr.	4607	REV			proj. sect.	=TW4+Q1
serial nr.	COM17279	DEF			page	48 of 114

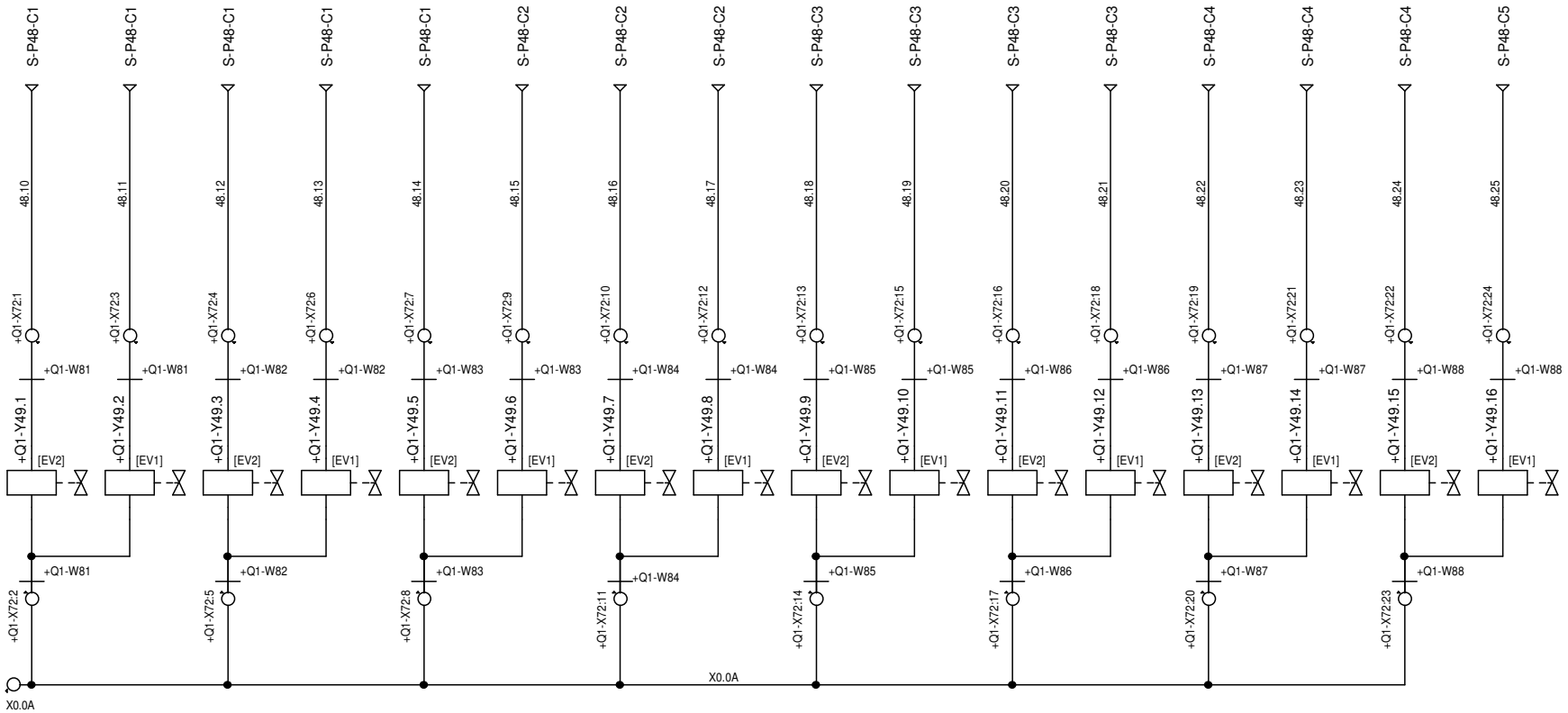

COLTELLO 1 NON IN LAVORO ASSE 1
CUCHILLO 1 NO EN TRABAJO EJE 1

COLTELLO 1 IN LAVORO ASSE 1
CUCHILLA EN TRABAJO EJE 1

COLTELLO 2 NON IN LAVORO ASSE 1
CUCHILLO 2 NO EN TRABAJO EJE 1

COLTELLO 2 IN LAVORO ASSE 1
CUCHILLA 2 EN TRABAJO EJE 1

COLTELLO 3 NON IN LAVORO ASSE 1
CUCHILLO 3 NO EN TRABAJO EJE 1

COLTELLO 3 IN LAVORO ASSE 1
CUCHILLA 3 EN TRABAJO EJE 1

COLTELLO 4 NON IN LAVORO ASSE 1
CUCHILLO 4 NO EN TRABAJO EJE 1

COLTELLO 4 IN LAVORO ASSE 1
CUCHILLA 4 EN TRABAJO EJE 1

COLTELLO 5 NON IN LAVORO ASSE 1
CUCHILLO 5 NO EN TRABAJO EJE 1

COLTELLO 5 IN LAVORO ASSE 1
CUCHILLA 5 EN TRABAJO EJE 1

COLTELLO 6 NON IN LAVORO ASSE 1
CUCHILLO 6 NO EN TRABAJO EJE 1

COLTELLO 6 IN LAVORO ASSE 1
CUCHILLA 6 EN TRABAJO EJE 1

COLTELLO 7 NON IN LAVORO ASSE 1
CUCHILLO 7 NO EN TRABAJO EJE 1

COLTELLO 7 IN LAVORO ASSE 1
CUCHILLA 7 EN TRABAJO EJE 1

COLTELLO 8 NON IN LAVORO ASSE 1
CUCHILLO 8 NO EN TRABAJO EJE 1

COLTELLO 8 IN LAVORO ASSE 1
CUCHILLA 8 EN TRABAJO EJE 1

Fosber
FOSBER S.p.A.
via Provinciale per Camaiore, 27/28 55060 Monsagrati (Lucca) - ITALIA
T. +39.0583.3891 - F. +39.0583.389205/385567
E-mail: info@fosber.it

TWIN 400 T.1
ELETTROVALVOLE COLTELLI ASSE 1
ELECTROVÁLVULAS CUCHILLOS EJE 1

customer	**CORRUGADORA GUATEMA**	REL	**L.CENTI**	**28/06/17**	issued	**29/06/2017**
job nr.	**4607**	REV			proj. sect.	**=TW4+Q1**
serial nr.	**COM17279**	DEF			page	**49 of 114**

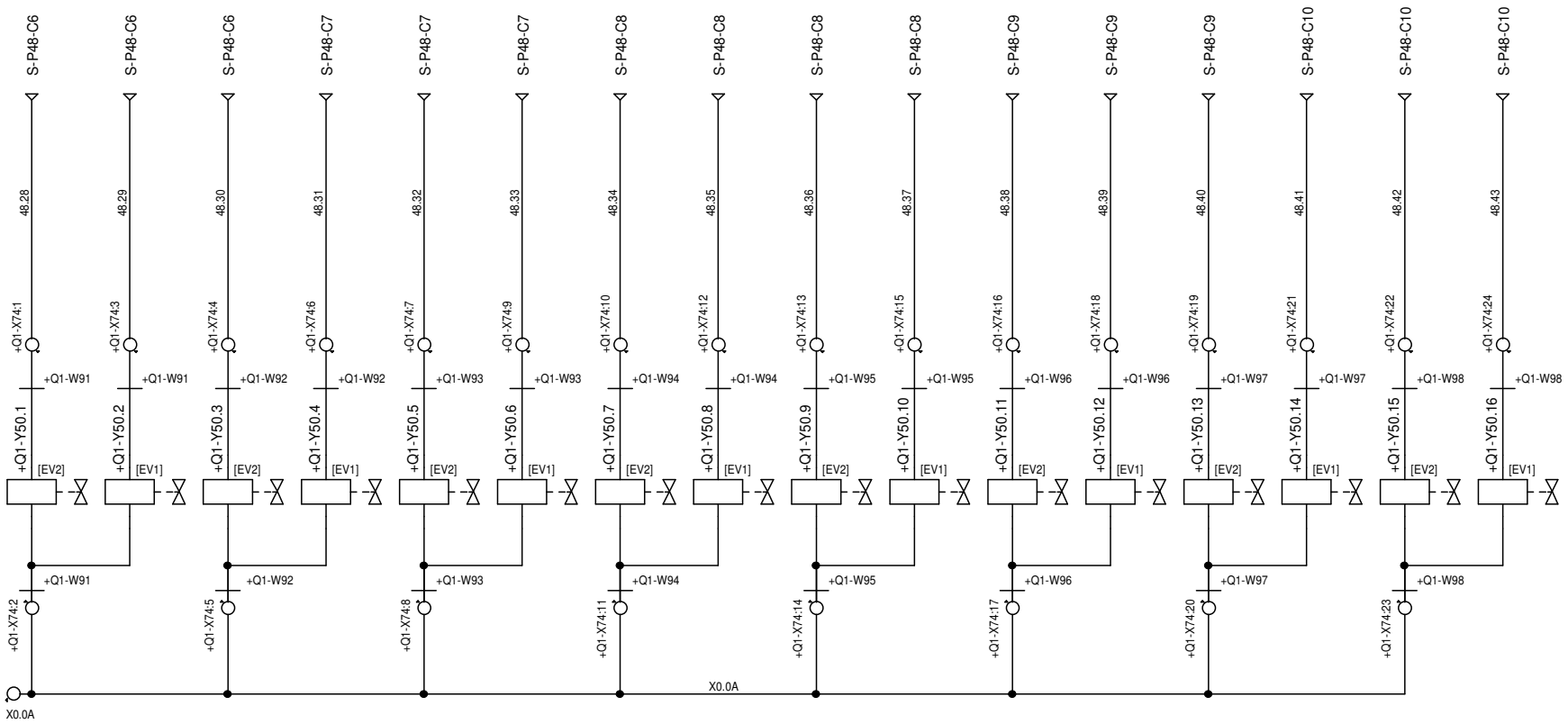

COLTELLO 1 NON IN LAVORO ASSE 2
CUCHILLO 1 NO EN TRABAJO EJE 2

COLTELLO 1 IN LAVORO ASSE 2
CUCHILLA 1 EN TRABAJO EJE 2

COLTELLO 2 NON IN LAVORO ASSE 2
CUCHILLO 2 NO EN TRABAJO EJE 2

COLTELLO 2 IN LAVORO ASSE 2
CUCHILLA 2 EN TRABAJO EJE 2

COLTELLO 3 NON IN LAVORO ASSE 2
CUCHILLO 3 NO EN TRABAJO EJE 2

COLTELLO 3 IN LAVORO ASSE 2
CUCHILLA 3 EN TRABAJO EJE 2

COLTELLO 4 NON IN LAVORO ASSE 2
CUCHILLO 4 NO EN TRABAJO EJE 2

COLTELLO 4 IN LAVORO ASSE 2
CUCHILLA 4 EN TRABAJO EJE 2

COLTELLO 5 NON IN LAVORO ASSE 2
CUCHILLO 5 NO EN TRABAJO EJE 2

COLTELLO 5 IN LAVORO ASSE 2
CUCHILLA 5 EN TRABAJO EJE 2

COLTELLO 6 NON IN LAVORO ASSE 2
CUCHILLO 6 NO EN TRABAJO EJE 2

COLTELLO 6 IN LAVORO ASSE 2
CUCHILLA 6 EN TRABAJO EJE 2

COLTELLO 7 NON IN LAVORO ASSE 2
CUCHILLO 7 NO EN TRABAJO EJE 2

COLTELLO 7 IN LAVORO ASSE 2
CUCHILLA 7 EN TRABAJO EJE 2

COLTELLO 8 NON IN LAVORO ASSE 2
CUCHILLO 8 NO EN TRABAJO EJE 2

COLTELLO 8 IN LAVORO ASSE 2
CUCHILLA 8 EN TRABAJO EJE 2

Fosber
FOSBER S.p.A.
via Provinciale per Camaiore, 27/28 55060 Monsagrati (Lucca) - ITALIA
T. +39.0583.3891 - F. +39.0583.389205/385567
E-mail: info@fosber.it

TWIN 400 T.1
ELETTROVALVOLE COLTELLI ASSE 2
ELECTROVÁLVULAS CUCHILLOS EJE 2

customer	**CORRUGADORA GUATEMA**	REL	**L.CENTI**	**28/06/17**	issued	**29/06/2017**
job nr.	**4607**	REV			proj. sect.	**=TW4+Q1**
serial nr.	**COM17279**	DEF			page	**50 of 114**

FOSBER S.p.A.
via Provinciale per Camaiore, 27/28 55060 Monsagrati (Lucca) - ITALIA
T. +39.0583.3891 - F. +39.0583.389205/385567
E-mail: info@fosber.it

TWIN 400 T.1

PAGINA INTENZIONALMENTE VUOTA
PAGINA INTENCIONALMENTE VACÍA

customer	**CORRUGADORA GUATEMA**	REL	**L.CENTI**	**28/06/17**	issued	**29/06/2017**
job nr.	**4607**	REV			proj. sect.	**=TW4+Q1**
serial nr.	**COM17279**	DEF			page	**51 of 114**

FOSBER S.p.A.
via Provinciale per Camaiore, 27/28 55060 Monsagrati (Lucca) - ITALIA
T. +39.0583.3891 - F. +39.0583.389205/385567
E-mail: info@fosber.it

TWIN 400 T.1
INTERFACCIA ASPIRAZIONE POLVERI
INTERFAZ ASPIRADOR POLVO

customer	**CORRUGADORA GUATEMA**	REL	**L.CENTI**	**28/06/17**	issued	**29/06/2017**
job nr.	**4607**	REV			proj. sect.	**=TW4+Q1**
serial nr.	**COM17279**	DEF			page	**52 of 114**

Rated Thermal Current (Ith) 1 Pole = 6A (250 Vac); 6A (30 Vcc)
Rated Insulation Voltage (Ui) 250Vac; 125V Vcc

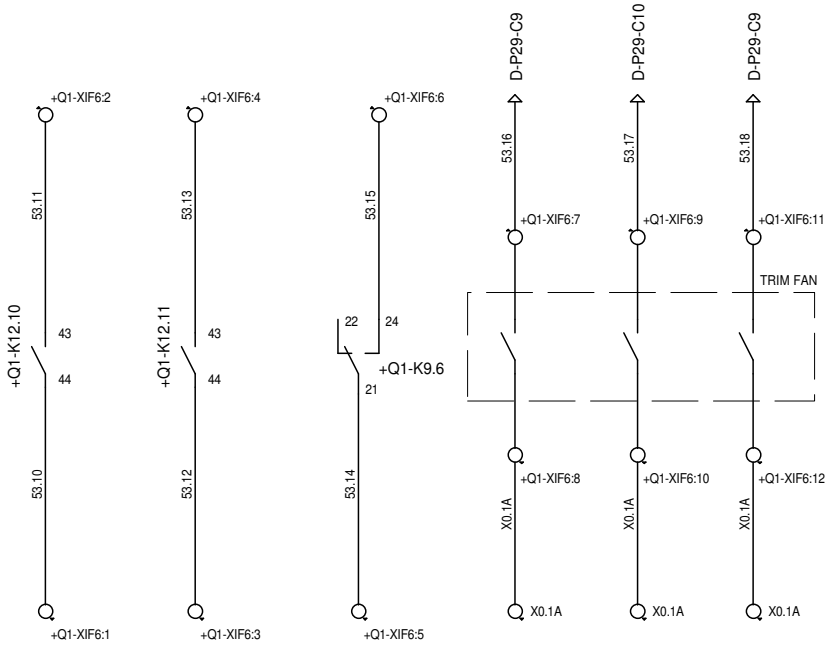

EMERGENZA PER ESTERNO CANALE A
EMERGENCIA PARA EXTERIOR CANAL A

EMERGENZA PER ESTERNO CANALE B
EMERGENCIA PARA EXTERIOR CANAL B

AVVIO/INSERZIONE
MACCHINA PER ESTERNO

TRIM FAN IN FAULT

ABILITAZIONE ALLA RIPARTENZA TRIM FAN

TRIM FAN A REGIME

Fosber

FOSBER S.p.A.
via Provinciale per Camaiore, 27/28 55060 Monsagrati (Lucca) - ITALIA
T. +39.0583.3891 - F. +39.0583.389205/385567
E-mail: info@fosber.it

TWIN 400 T.1
INTERFACCIA ASPIRATORE RIFILI
INTERFAZ ASPIRADOR RETALES

customer	**CORRUGADORA GUATEMA**	REL	**L.CENTI**	**28/06/17**	issued	**29/06/2017**
job nr.	**4607**	REV			proj. sect.	**=TW4+Q1**
serial nr.	**COM17279**	DEF			page	**53 of 114**

FOSBER S.p.A.
via Provinciale per Camaiore, 27/28 55060 Monsagrati (Lucca) - ITALIA
T. +39.0583.3891 - F. +39.0583.389205/385567
E-mail: info@fosber.it

TWIN 400 T.1

PAGINA INTENZIONALMENTE VUOTA
PAGINA INTENCIONALMENTE VACÍA

customer	**CORRUGADORA GUATEMA**	REL	**L.CENTI**	**28/06/17**	issued	**29/06/2017**
job nr.	**4607**	REV			proj. sect.	**=TW4+Q1**
serial nr.	**COM17279**	DEF			page	**54 of 114**

LISTA PRESSACAVI:

1:M12	+Q0+Q1-W07
2:M12	+Q0+Q1-W07A
3:M12	=SYC+C0+B22-W06
4:M12	+Q1-W40
5:M12	+Q1-W41
6:M12	LIBERO TAPPO
7:M16	LIBERO TAPPO
8:M16	LIBERO TAPPO
9:M16	+Q1-W89
10:M16	+Q1-W99
11:M20	LIBERO TAPPO
12:M20	LIBERO TAPPO
13:M20	LIBERO TAPPO
14:M20	LIBERO TAPPO
15:M16	+Q0+Q1-W01
16:M16	+Q0+Q1-W02
17:M16	+Q0+Q1-W03
18:M16	=SYC+C0+B22-W02
19:M16	+Q0+Q1-W30
20:M16	=SYC+C0+B22-W05
21:M16	=SYC+C0+B22-W01
22:M16	+C1+Q1-W03
23:M16	+Q1+C0-W01
24:M12	+Q0-W17A
25:M12	+Q0-W18A
26:M12	+Q1-W24
27:M12	+Q1-W50
28:M12	+Q1-W51
29:M12	+Q1-W20
30:M12	+Q1-W21
31:M12	+Q1+Q0-W08
32:M16	+Q1-W81
33:M16	+Q1-W82
34:M16	+Q1-W83
35:M16	+Q1-W84
36:M16	+Q1-W85
37:M16	+Q1-W86
38:M16	+Q1-W87
39:M16	+Q1-W88
40:M16	+Q1-W91
41.M16	+Q1-W92
42.M16	+Q1-W93
43.M16	+Q1-W94
44.M16	+Q1-W95
45.M16	+Q1-W96
46.M16	+Q1-W97
47.M16	+Q1-W98
48.M20	+Q1+C0-W00
49.M20	+Q1+C1-W01
50.M20	+B0+Q1-W01
51.M20	+Q1+Q0-W00
52.M20	+TW4+ROS-W00
53.M20	LIBERO TAPPO
54.M20	+Q0+Q1-W05
55.M20	+Q1-W16
56.M20	+Q0+Q1-W09
57.M20	+Q1-W04
58.M20	+Q1-W04A
59.M16	+Q1-W22
60.M16	+Q1-W23
61.M16	+Q0+Q1-W04
62.M20	+Q0+Q1-W03A
63.M20	+Q1-W25
64.M20	+Q1-W26
65.M20	+Q1-W27
66.M20	+Q1-W28
67.M20	+Q1-W29
68.M32	LIBERO TAPPO
69.M32	LIBERO TAPPO
70.M32	LIBERO TAPPO
71.M32	+Q0+Q1-W06
72.M32	+Q1+C0-W02
73.M32	+Q1+C1-W02

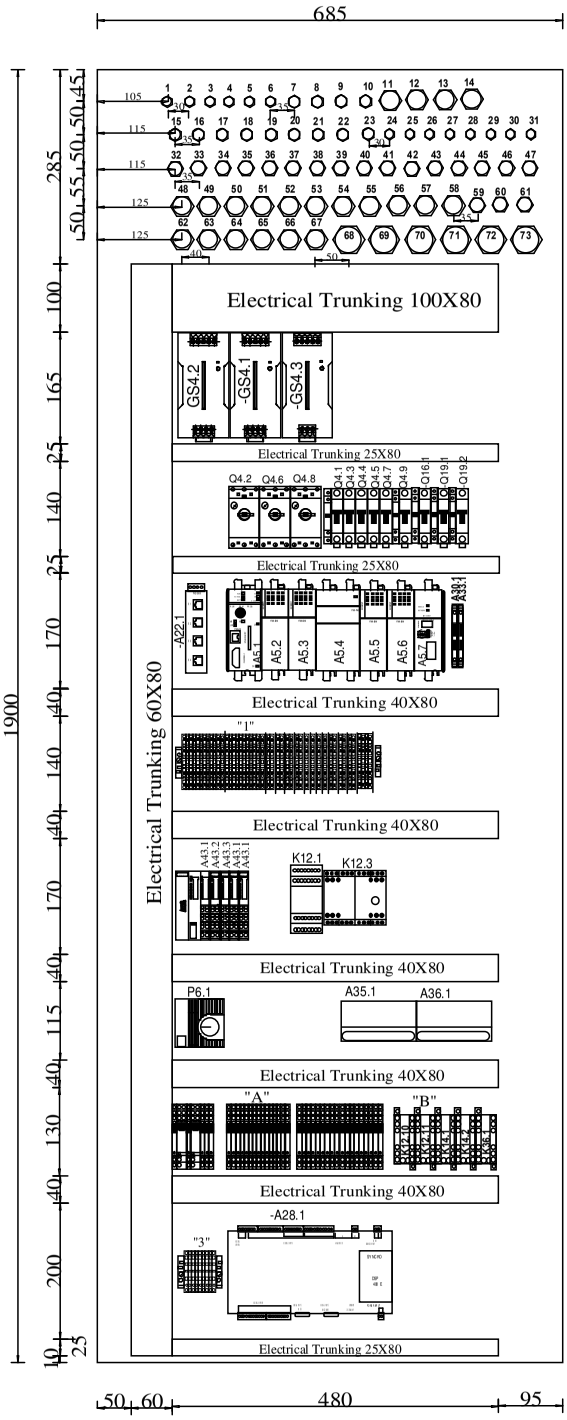

"A" (Relè Allen-Bradley):

K4.3	HLT-2Z24	(32300900)
K9.1	HLT-22Z24	(32300905)
K9.2	HLT-2Z24	(32300900)
K9.3	HLT-22Z24	(32300905)
K9.4	HLS-2Z24	(32300915)
K9.5	HLS-2Z24	(32300915)
K9.6	HLT-2Z24	(32300900)
K10.1	HLT-2Z24	(32300900)
K10.2	HLT-2Z24	(32300900)
K10.3	HLT-2Z24	(32300900)
K10.4	HLT-2Z24	(32300900)
K10.5	HLT-2Z24	(32300900)
K10.6	HLT-2Z24	(32300900)
K10.7	HLT-2Z24	(32300900)
K10.8	HLT-2Z24	(32300900)
K10.9	HLT-2Z24	(32300900)
K10.10	HLT-2Z24	(32300900)
K10.11	HLT-2Z24	(32300900)
K10.12	HLT-2Z24	(32300900)
K10.13	HLT-2Z24	(32300900)
K10.15	HLT-2Z24	(32300900)
K10.16	HLT-2Z24	(32300900)
K11.1	HLS-2Z24	(32300915)
K11.2	HLS-2Z24	(32300915)
K46.1	HLT-2Z24	(32300900)
K46.2	HLT-2Z24	(32300900)
K46.3	HLT-2Z24	(32300900)
K46.4	HLT-2Z24	(32300900)
K46.5	HLT-2Z24	(32300900)
K46.6	HLT-2Z24	(32300900)
K46.7	HLT-2Z24	(32300900)
K46.8	HLT-2Z24	(32300900)
K46.9	HLT-2Z24	(32300900)
K46.10	HLT-2Z24	(32300900)
K46.11	HLT-2Z24	(32300900)
K46.12	HLT-2Z24	(32300900)
K46.13	HLT-2Z24	(32300900)
K46.14	HLT-2Z24	(32300900)
K46.15	HLT-2Z24	(32300900)
K46.16	HLT-2Z24	(32300900)

"B" (Relè Omron G7SA-4A2B):
K12.10
K12.11
K14.1
K14.2
K36.1

MORSETTIERA "1"
TIPO ZDU 2,5 :
X1(3 ZDU+1ZPE2,5+8 ZDU)

MORSETTIERA "2"
TIPO ZDK 2,5 PONTICELLATI:
X0.0A(10); X0.1A(10); X0.2A(2);
X0.3A(2); X0.4(2); X0.5(2);
DF1(1); DF2(1);
V+(1); V-(1);
X0.12A(2); X0.13A(2);
X0.1R(2); XI(7)

MORSETTIERA "3"
TIPO ZDU 2,5:+Q1-X202
X0.0D (2); X0.1D (2);
X0.0DP(1);XO.1DP(1)

customer	CORRUGADORA GUATEMA	REL	L.CENTI	28/06/17	issued	29/06/2017
job nr.	4607	REV			proj. sect.	=TW4+Q1
serial nr.	COM17279	DEF			page	55 of 114

TWIN 400 T.1
LAY - OUT PIASTRA CENTRALE
LAY - OUT PLACA CENTRAL

FOSBER S.p.A.
via Provinciale per Camaiore, 27/28 55060 Monsagrati (Lucca) - ITALIA
T. +39.0583.3891 - F. +39.0583.389205/385567
E-mail: info@fosber.it

PIASTRA CENTRALE

PIASTRA DESTRA

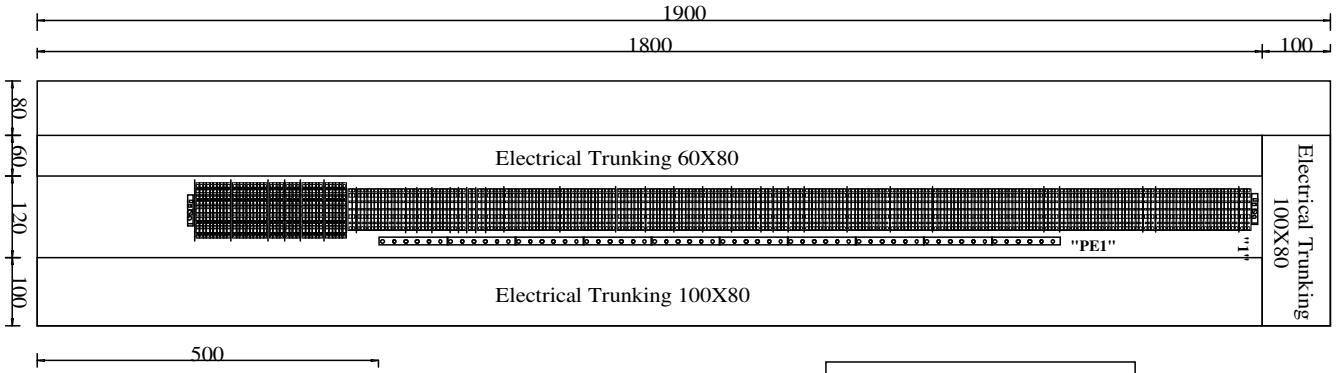

MORSETTIERA "L" SU ISOLATORI M5(5)
PARTENZA DAL BASSO:
TIPO ZDK 2.5 PONTICELLATI:
X0.0A (10) ; X0.1A(10)
X55 (4) ; X50,X51(4),(X50 SOPRA-X51 SOTTO)
X40,X56 (5) (X40 SOPRA -X56 SOTTO)
X31,X36 (5) (X31 SOPRA-X36 SOTTO)

TIPO ZDU 2.5:
X2 (2) ; X3 (16) ; X4 (3) ; X9 (4) ; X14 (5)
X15 (12 raddoppiare 1-4-5) ; X16 (16) ; X18 (16)
X21 (8) ; X22 (8)
X23 (8) ; X24 (8) ; X25 (8)
X47 (4) ; X52 (4) ; X60 (10+1PE) ; X61 (10+1PE)
X62 (10+1PE) ; X70 (32) ; X71 (4) ; X72 (24)
X73 (3) ; X74 (24) ; X75 (3)

Fosber	**FOSBER** S.p.A. via Provinciale per Camaiore, 27/28 55060 Monsagrati (Lucca) - ITALIA T. +39.0583.3891 - F. +39.0583.389205/385567 E-mail: info@fosber.it	**TWIN 400 T.1** LAY - OUT PIASTRA DESTRA LAY - OUT PLACA DERECHA	customer	**CORRUGADORA GUATEMA**	REL	**L.CENTI**	**28/06/17**	issued	**28/06/2017**
			job nr.	**4607**	REV			proj. sect.	**=TW4+Q1**
			serial nr.	**COM17279**	DEF			page	**56 of 114**

PIASTRA SINISTRA

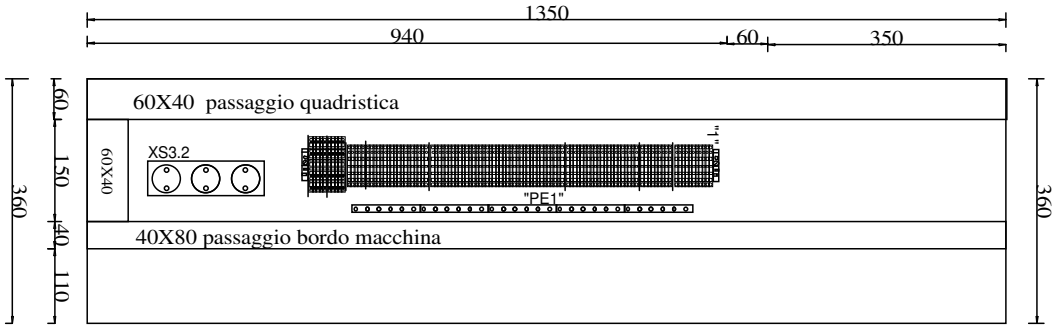

MOERSETTIERA "I":
TIPO ZDU 2,5:
(ASSEMBLAGGIO DALL'ALTO VERSO IL BASSO)
XIF1 (10 + 1 ZPE2,5)
XIF2 (9)
XIF3 (20 + 1 ZPE 2,5)
XIF4 (32+ 1 ZPE 2,5)
XIF5(14+ 1 ZPE 2,5)
XIF6 (4+ 1 ZPE 2,5)
X0.0A (5)
X0.1A (5)

Fosber
FOSBER S.p.A.
via Provinciale per Camaiore, 27/28 55060 Monsagrati (Lucca) - ITALIA
T. +39.0583.3891 - F. +39.0583.389205/385567
E-mail: info@fosber.it

TWIN 400 T.1
LAY - OUT PIASTRA SINISTRA
LAY - OUT PLACA IZQUIERDA

customer	CORRUGADORA GUATEMA	REL	L.CENTI	28/06/17	issued	28/06/2017
job nr.	4607	REV			proj. sect.	=TW4+Q1
serial nr.	COM17279	DEF			page	57 of 114

FOSBER S.p.A.
via Provinciale per Camaiore, 27/28 55060 Monsagrati (Lucca) - ITALIA
T. +39.0583.3891 - F. +39.0583.389205/385567
E-mail: info@fosber.it

TWIN 400 T.1

PAGINA INTENZIONALMENTE VUOTA
PAGINA INTENCIONALMENTE VACIA

customer	**CORRUGADORA GUATEMA**	REL	**L.CENTI**	**28/06/17**	issued	**28/06/2017**
job nr.	**4607**	REV			proj. sect.	**=TW4+Q1**
serial nr.	**COM17279**	DEF			page	**58 of 114**

FOSBER S.p.A.
via Provinciale per Camaiore, 27/28 55060 Monsagrati (Lucca) - ITALIA
T. +39.0583.3891 - F. +39.0583.389205/385567
E-mail: info@fosber.it

TWIN 400 T.1

PAGINA INTENZIONALMENTE VUOTA
PAGINA INTENCIONALMENTE VACÍA

customer	**CORRUGADORA GUATEMA**	REL	**L.CENTI**	**28/06/17**	issued	**28/06/2017**
job nr.	**4607**	REV			proj. sect.	**=TW4+Q1**
serial nr.	**COM17279**	DEF			page	**59 of 114**

CABLAGGIO DI TIPO +B1-A

FOTOCELLULE DI JAM UP

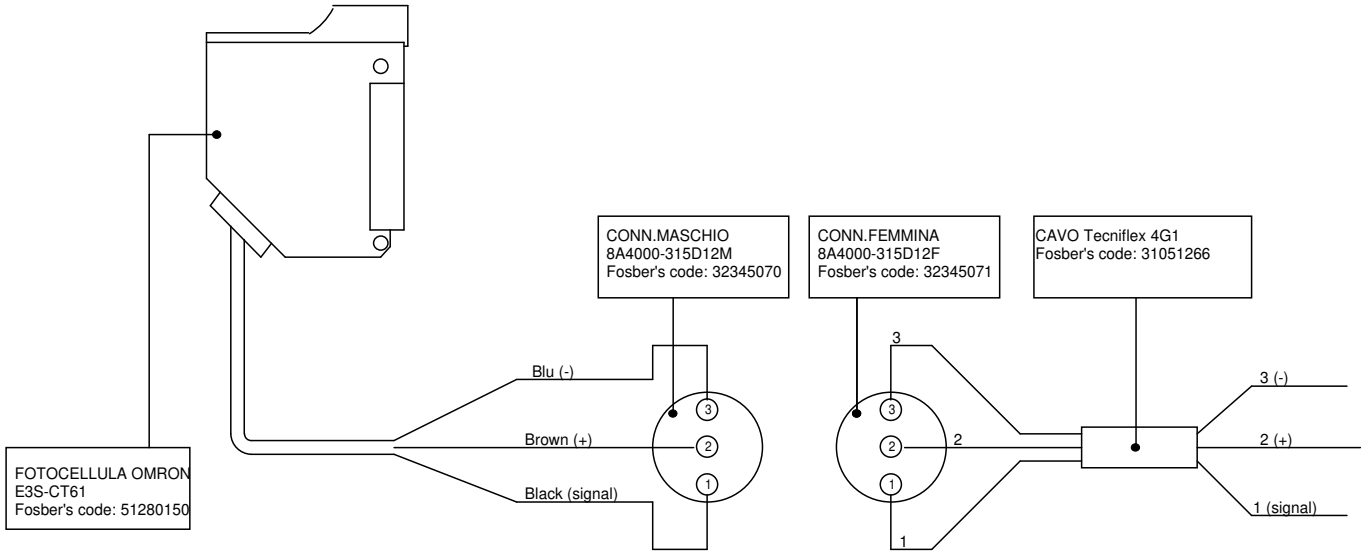

CABLAGGIO DI TIPO +B1-B

FINECORSA SPOSTAMENTO MACCHINA

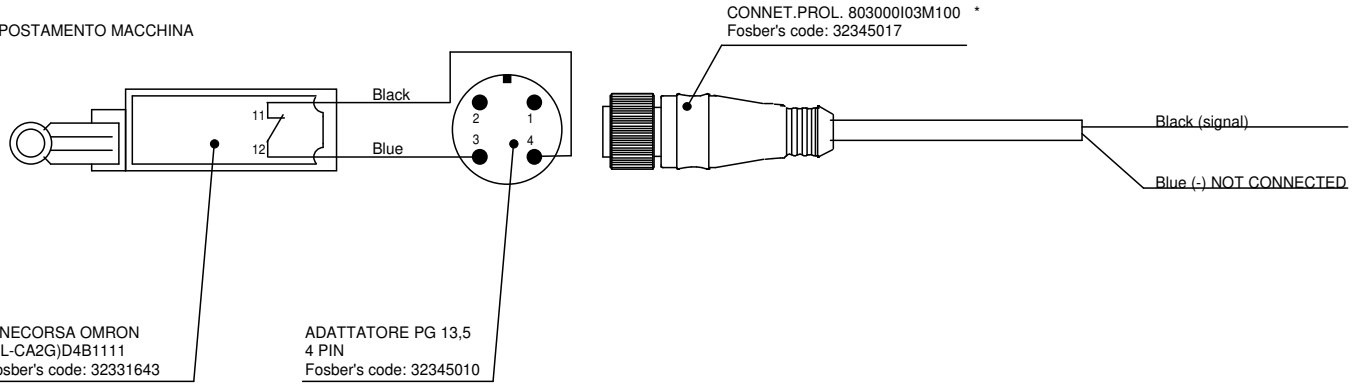

FOSBER S.p.A.
via Provinciale per Camaiore, 27/28 55060 Monsagrati (Lucca) - ITALIA
T. +39.0583.3891 - F. +39.0583.389205/385567
E-mail: info@fosber.it

TWIN 400 T.1
CABLAGGIO FOTOCELLULE E MICRO
CABLEADO FOTOCÉLULAS Y MICRO

customer	CORRUGADORA GUATEMA	REL	L.CENTI	28/06/17	issued	28/06/2017
job nr.	4607	REV			proj. sect.	=TW4+Q1
serial nr.	COM17279	DEF			page	60 of 114

CABLAGGIO TIPO +Q1-A

RILEVAMENTO POSIZIONE PIANETTO TAGLIO A CONTATTO

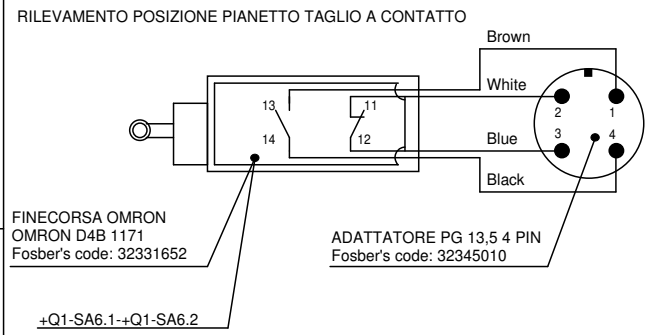

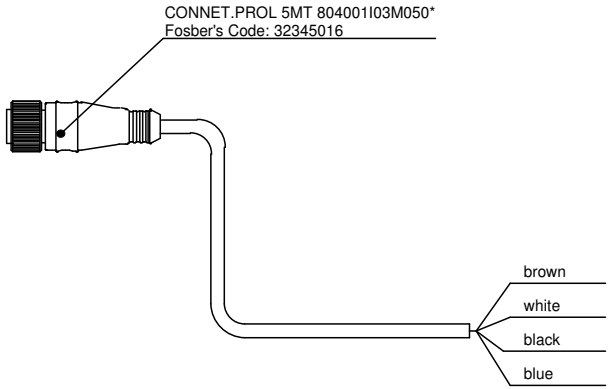

TABLE

Blue 3	N.C.
White 2	N.C.
Black 4	N.O.
brown 1	N.O.

CABLAGGIO SCATOLE AT7.1 AT7.2

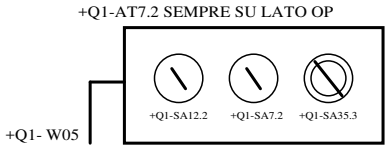

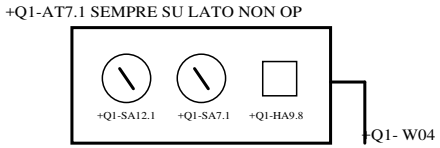

+Q1-SA12.2	+Q1-SA7.2	+Q1-SA35.3	+Q1-SA12.1	+Q1-SA7.1	+Q1-HA9.8
[NO 6.20-X0.1A] [NO 12.30-X0.1A] [NO 7.19A- X0.1A] SELETTORE A CHIAVE 2 POS STABILE	[NO 7.19 - 7.19A] SELETTORE A CHIAVE 2 POS INSTABILE	[NO 35.24 - X0.1A] [NO 35.25 - X0.1A] SEL. 2 POS. INSTAB. NERO	[NO 12.30-X0.1A] [NO 6.20-X0.1A] [NO 7.18A- X0.1A] SELETTORE A CHIAVE 2POS STABILE	[NO 7.18 - 7.18A SELETTORE A CHIAVE 2 POS INSTABILE	1) VUOTO 2) 9.20 3) X00A SUONERIA

+Q1- W05	+Q1- W04
+Q1-W05 (1) - X0.1A +Q1-W05 (2) - 35.24 +Q1-W05 (3) - 35.25 +Q1-W05 (4) - 12.30 +Q1-W05 (5) - 7.19 +Q1-W05 (6) - 6.20 +Q1-W05 (7) - PE0	+Q1-W04 (1) - X0.1A +Q1-W04 (2) - X0.0A +Q1-W04 (3) - 9.20 +Q1-W04 (4) - 12.30 +Q1-W04 (5) - 7.18 +Q1-W04 (6) - 6.20 +Q1-W04 (7) - PE0

Fosber

FOSBER S.p.A.
via Provinciale per Camaiore, 27/28 55060 Monsagrati (Lucca) - ITALIA
T. +39.0583.3891 - F. +39.0583.389205/385567
E-mail: info@fosber.it

TWIN 400 T.1
CABLAGGIO FINECORSA
CABLEADO FIN DE TRAYECTORIA

customer	CORRUGADORA GUATEMA	REL	L.CENTI	28/06/17	issued	28/06/2017
job nr.	4607	REV			proj. sect.	=TW4+Q1
serial nr.	COM17279	DEF			page	61 of 114

CABLAGGIO DI TIPO C PER TWIN TAGLIO DALL' ALTO

COLLEGAMENTO COLTELLI ASSE 1
CONNECTION BLADE AXIS 1

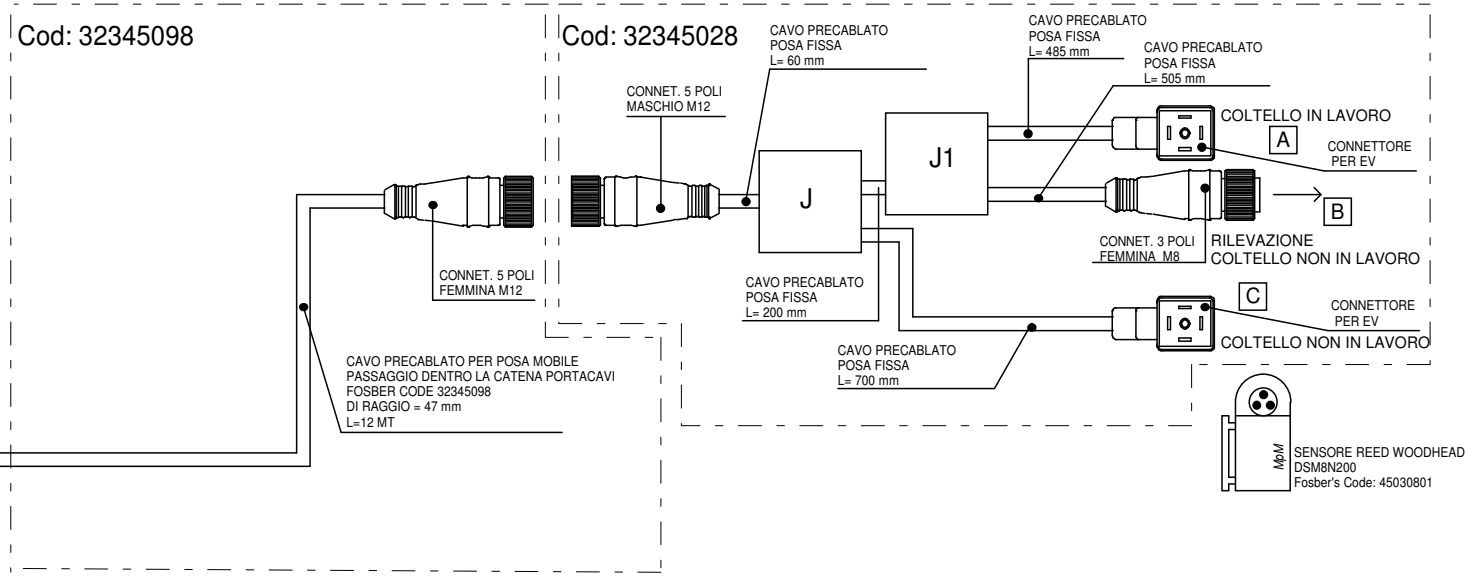

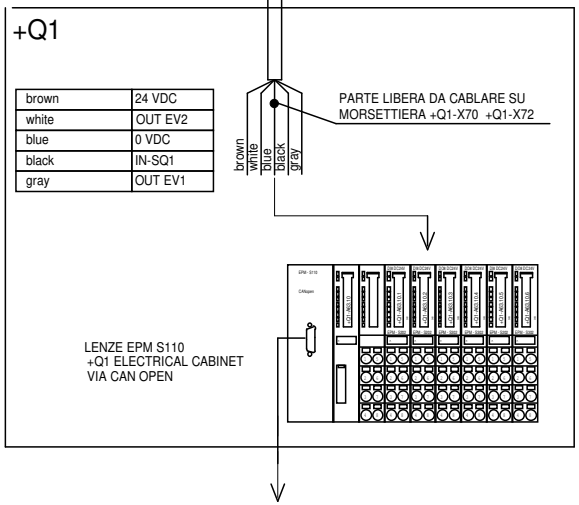

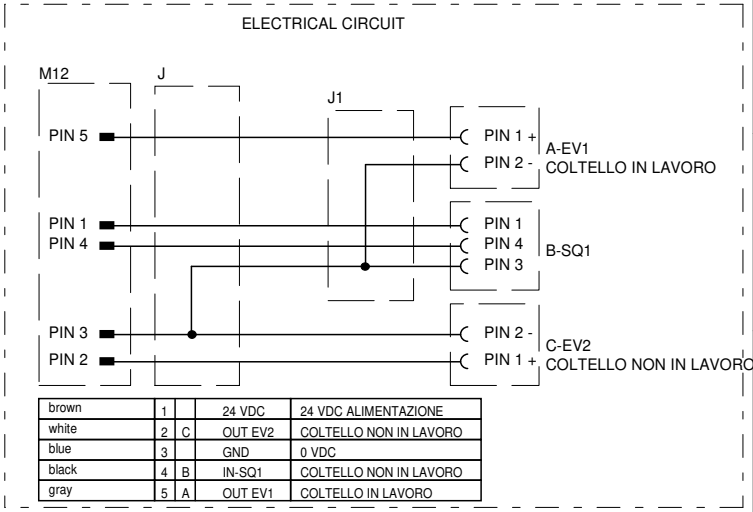

brown	1		24 VDC	24 VDC ALIMENTAZIONE
white	2	C	OUT EV2	COLTELLO NON IN LAVORO
blue	3		GND	0 VDC
black	4	B	IN-SQ1	COLTELLO NON IN LAVORO
gray	5	A	OUT EV1	COLTELLO IN LAVORO

Fosber
FOSBER S.p.A.
via Provinciale per Camaiore, 27/28 55060 Monsagrati (Lucca) - ITALIA
T. +39.0583.3891 - F. +39.0583.389205/385567
E-mail: info@fosber.it

TWIN 400 T.1
COLLEGAMENTO TIPO C
CONEXIÓN TIPO C

customer	CORRUGADORA GUATEMA	REL	L.CENTI	28/06/17	issued	28/06/2017
job nr.	4607	REV			proj. sect.	=TW4+Q1
serial nr.	COM17279	DEF			page	62 of 114

FOSBER S.p.A.
via Provinciale per Camaiore, 27/28 55060 Monsagrati (Lucca) - ITALIA
T. +39.0583.3891 - F. +39.0583.389205/385567
E-mail: info@fosber.it

TWIN 400 T.1
COLLEGAMENTO TIPO C
CONEXIÓN TIPO C

customer	**CORRUGADORA GUATEMA**	REL	**L.CENTI**	**28/06/17**	issued	**28/06/2017**
job nr.	**4607**	REV			proj. sect.	**=TW4+Q1**
serial nr.	**COM17279**	DEF			page	**63 of 114**

MAIN CABLING ON MACHINE CABINET =TW4 +Q1

Nr.	INITIALS	CODE	TYPE	Ø (mm)	LENGTH (mt)	DESCRIPTION	START	ARRIVAL	TERMINAL BOX
1	+Q1-W04	31051272	TECNIFLEX 7G1.5 MM2	9.2	17	REQUEST FOR ADJ. KNIFES NON OP SIDE	+Q1	+Q1-SA12.1	+Q1-X15
2	+Q1-W05	31051272	TECNIFLEX 7G1.5 MM2	9.2	7	REQUEST FOR ADJ. KNIFES OP SIDE	+Q1	+Q1-SA12.2	+Q1-X15
3	+Q1-W16	31051272	TECNIFLEX 7G1.5 MM2	9.2	9	LAMP ALLARM	+Q1	+Q1-H9.1	+Q0-X14
4	+Q1-W17A	31050116	CAVO FRAF 4X0,5 SCH	5.7	8	PHOTOEYES KNIFES ADJUSTEMENT AXIS 1 (EM)	+Q1	+Q1-XB47A	+Q1-X47
5	+Q1-W18A	31050116	CAVO FRAF 4X0,5 SCH	5.7	8	PHOTOEYES KNIFES ADJUSTEMENT AXIS 2 (EM)	+Q1	+Q1-XB47B	+Q1-X47
6	+Q1-W21	31051260	TECNIFLEX 3G1 MM2	6.2		AIR PRESSURE VALVE	+Q1	+Q1-Y9.5	DIRECT
7					16				
8					16				
9	+Q1-W24	31050116	CEAM FRAF 4X0,5 sch	6	20	AIR PRESSURE PRESENCE	+Q0	+Q1-Z6.1	+Q0-X9
10	+Q1-W25	32337035	A-B PROLUNGA M12-F 8 PIN 10MT			CARTER GUARD OPEN E.C. POWER LEFT SIDE	+Q1	+Q1-S14.1	+Q1-X21
11	+Q1-W26	32337035	A-B PROLUNGA M12-F 8 PIN 10MT			CARTER GUARD OPEN E.C. LOGIC RIGHT SIDE	+Q1	+Q1-S14.2	+Q1-X22
12	+Q1-W27	32337035	A-B PROLUNGA M12-F 8 PIN 10MT			CARTER GUARD OPEN OUTLET PAPER LEFT SIDE	+Q1	+Q1-S14.3	+Q1-X23
13	+Q1-W28	32337035	A-B PROLUNGA M12-F 8 PIN 10MT			CARTER GUARD OPEN OUTLET PAPER RIGHT SIDE	+Q1	+Q1-S14.4	+Q1-X24
14	+Q1-W29	32337035	A-B PROLUNGA M12-F 8 PIN 10MT			CARTER GUARD OPEN OPTIONAL INLET PAPER	+Q1	+Q1-S14.5	+Q1-X25
15	+Q1-W30	31240642	CON.PROL.M23 BOX ESCHA 15MT				+Q1	+Q1-A39.1	+Q1-X61
16	+Q1-W31	31240642	CON.PROL.M23 BOX ESCHA 15MT				+Q1	+Q1-A40.1	+Q1-X62
17	+Q1-W33	31240642	CON.PROL.M23 BOX ESCHA 15MT				+Q1	+Q1-A38.1	
18	+Q1-W50	31050116	CAVO FRAF 4X0,5 SCH	5.7	15	JAM UP PHOTOCELL AX 1	+Q1-A40.1	+Q1-B40.1	DIRECT
19	+Q1-W51	31050116	CAVO FRAF 4X0,5 SCH	5.7	15	JAM UP PHOTOCELL AX 2	+Q1-A40.1	+Q1-B40.2	DIRECT
20									
21									
22									
23									
24									
25									
26									
27									
28									
29									
30									
31									
32									
33									
34	+Q1-W40	31050086	CAVO TECO ORPMX 4X0.20ST	5.0		CONTROL TEFLON IN PROGRESS AX 1	+Q1	+Q1-SA35.1	DIRECT
35	+Q1-W41	31050086	CAVO TECO ORPMX 4X0.20ST	5.0		CONTROL TEFLON IN PROGRESS AX 1	+Q1	+Q1-SA35.2	DIRECT

Fosber
FOSBER S.p.A.
via Provinciale per Camaiore, 27/28 55060 Monsagrati (Lucca) - ITALIA
T. +39.0583.3891 - F. +39.0583.389205/385567
E-mail: info@fosber.it

TWIN 400 T.1
COMPLESSIVO CAVI BORDO MACCHINA
CONJUNTO CABLES BORDO MAQUINA

customer	CORRUGADORA GUATEMA	REL	L.CENTI	28/06/17	issued	28/06/2017
job nr.	4607	REV			proj. sect.	=TW4+Q1
serial nr.	COM17279	DEF			page	64 of 114

MAIN CONNECTION CABLING CABINET =TW4 +Q1

Nr.	INITIALS	CODE	TYPE	∅ (mm)	LENGTH (mt)	DESCRIPTION	START	ARRIVAL	TERMINAL BOX
1	+Q1-W81	32345098	PRO.PR.M12F.5POLI R=47 L=12MT	5.5		SLITTER 1 AXIS 1	+Q1	+Q1-SQ45.1 +Q1-Y49.1, +Q1-Y49.2	+Q1X70 / +Q1-X72
2	+Q1-W82	32345098	PRO.PR.M12F.5POLI R=47 L=12MT	5.5		SLITTER 2 AXIS 1	+Q1	+Q1-SQ45.2 +Q1-Y49.3, +Q1-Y49.4	+Q1X70 / +Q1-X72
3	+Q1-W83	32345098	PRO.PR.M12F.5POLI R=47 L=12MT	5.5		SLITTER 3 AXIS 1	+Q1	+Q1-SQ45.3 +Q1-Y49.5, +Q1-Y49.6	+Q1X70 / +Q1-X72
4	+Q1-W84	32345098	PRO.PR.M12F.5POLI R=47 L=12MT	5.5		SLITTER 4 AXIS 1	+Q1	+Q1-SQ45.4 +Q1-Y49.7, +Q1-Y49.8	+Q1X70 / +Q1-X72
5	+Q1-W85	32345098	PRO.PR.M12F.5POLI R=47 L=12MT	5.5		SLITTER 5 AXIS 1	+Q1	+Q1-SQ45.5 +Q1-Y49.9, +Q1-Y49.10	+Q1X70 / +Q1-X72
6	+Q1-W86	32345098	PRO.PR.M12F.5POLI R=47 L=12MT	5.5		SLITTER 6 AXIS 1	+Q1	+Q1-SQ45.6 +Q1-Y49.11, +Q1-Y49.12	+Q1X70 / +Q1-X72
7	+Q1-W87	32345098	PRO.PR.M12F.5POLI R=47 L=12MT	5.5		SLITTER 7 AXIS 1	+Q1	+Q1-SQ45.7 +Q1-Y49.13, +Q1-Y49.14	+Q1X70 / +Q1-X72
8	+Q1-W88	32345098	PRO.PR.M12F.5POLI R=47 L=12MT	5.5		SLITTER 8 AXIS 1	+Q1	+Q1-SQ45.8 +Q1-Y49.15, +Q1-Y49.16	+Q1X70 / +Q1-X72
9	+Q1-W89	32345098	PRO.PR.M12F.5POLI R=47 L=12MT	5.5		SLITTER 9 AXIS 1	+Q1	+Q1-SQ47.1 +Q1-Y49.17, +Q1-Y49.18	+Q1X71 / +Q1-X73
10	+Q1-W91	32345098	PRO.PR.M12F.5POLI R=47 L=12MT	5.5		SLITTER 1 AXIS 2	+Q1	+Q1-SQ45.9 +Q1-Y50.1, +Q1-Y50.2	+Q1X70 / +Q1-X74
11	+Q1-W92	32345098	PRO.PR.M12F.5POLI R=47 L=12MT	5.5		SLITTER 2 AXIS 2	+Q1	+Q1-SQ45.10 +Q1-Y50.3, +Q1-Y50.4	+Q1X70 / +Q1-X74
12	+Q1-W93	32345098	PRO.PR.M12F.5POLI R=47 L=12MT	5.5		SLITTER 3 AXIS 2	+Q1	+Q1-SQ45.11 +Q1-Y50.5, +Q1-Y50.6	+Q1X70 / +Q1-X74
13	+Q1-W94	32345098	PRO.PR.M12F.5POLI R=47 L=12MT	5.5		SLITTER 4 AXIS 2	+Q1	+Q1-SQ45.12 +Q1-Y50.7, +Q1-Y50.8	+Q1X70 / +Q1-X74
14	+Q1-W95	32345098	PRO.PR.M12F.5POLI R=47 L=12MT	5.5		SLITTER 5 AXIS 2	+Q1	+Q1-SQ45.13 +Q1-Y50.9, +Q1-Y50.10	+Q1X70 / +Q1-X74
15	+Q1-W96	32345098	PRO.PR.M12F.5POLI R=47 L=12MT	5.5		SLITTER 6 AXIS 2	+Q1	+Q1-SQ45.14 +Q1-Y50.11, +Q1-Y50.12	+Q1X70 / +Q1-X74
16	+Q1-W97	32345098	PRO.PR.M12F.5POLI R=47 L=12MT	5.5		SLITTER 7 AXIS 2	+Q1	+Q1-SQ45.15 +Q1-Y50.13, +Q1-Y50.14	+Q1X70 / +Q1-X74
17	+Q1-W98	32345098	PRO.PR.M12F.5POLI R=47 L=12MT	5.5		SLITTER 8 AXIS 2	+Q1	+Q1-SQ45.16 +Q1-Y50.15, +Q1-Y50.16	+Q1X70 / +Q1-X74
18	+Q1-W99	32345098	PRO.PR.M12F.5POLI R=47 L=12MT	5.5		SLITTER 9 AXIS 2	+Q1	+Q1-SQ47.2 +Q1-Y50.17, +Q1-Y50.18	+Q1X71 / +Q1-X73
19	+Q1-W100	31051278	CAVO TECNIFLEX 25G1 MM2	15.60		LUBRICATION VALVES COMMAND	+Q1	+Q1-AT37.1 (Box on the machine)	+Q1-X76
20	+Q1-W101	31051260	CAVO TECNIFLEX 3G1 MM2	6.2		AXIS 1 BLADE 1 LUBRICATION	+Q1-AT37.1 (Box on the machine)	+Q1-Y37.1	Aux. Terminal Box
21	+Q1-W102	31051260	CAVO TECNIFLEX 3G1 MM2	6.2		AXIS 1 BLADE 2 LUBRICATION	+Q1-AT37.1 (Box on the machine)	+Q1-Y37.2	Aux. Terminal Box
22	+Q1-W103	31051260	CAVO TECNIFLEX 3G1 MM2	6.2		AXIS 1 BLADE 3 LUBRICATION	+Q1-AT37.1 (Box on the machine)	+Q1-Y37.3	Aux. Terminal Box
23	+Q1-W104	31051260	CAVO TECNIFLEX 3G1 MM2	6.2		AXIS 1 BLADE 4 LUBRICATION	+Q1-AT37.1 (Box on the machine)	+Q1-Y37.4	Aux. Terminal Box
24	+Q1-W105	31051260	CAVO TECNIFLEX 3G1 MM2	6.2		AXIS 1 BLADE 5 LUBRICATION	+Q1-AT37.1 (Box on the machine)	+Q1-Y37.5	Aux. Terminal Box
25	+Q1-W106	31051260	CAVO TECNIFLEX 3G1 MM2	6.2		AXIS 1 BLADE 6 LUBRICATION	+Q1-AT37.1 (Box on the machine)	+Q1-Y37.6	Aux. Terminal Box
26	+Q1-W107	31051260	CAVO TECNIFLEX 3G1 MM2	6.2		AXIS 1 BLADE 7 LUBRICATION	+Q1-AT37.1 (Box on the machine)	+Q1-Y37.7	Aux. Terminal Box
27	+Q1-W108	31051260	CAVO TECNIFLEX 3G1 MM2	6.2		AXIS 1 BLADE 8 LUBRICATION	+Q1-AT37.1 (Box on the machine)	+Q1-Y37.8	Aux. Terminal Box
28	+Q1-W109	31051260	CAVO TECNIFLEX 3G1 MM2	6.2		AXIS 2 BLADE 1 LUBRICATION	+Q1-AT37.1 (Box on the machine)	+Q1-Y37.9	Aux. Terminal Box
29	+Q1-W110	31051260	CAVO TECNIFLEX 3G1 MM2	6.2		AXIS 2 BLADE 2 LUBRICATION	+Q1-AT37.1 (Box on the machine)	+Q1-Y37.10	Aux. Terminal Box
30	+Q1-W111	31051260	CAVO TECNIFLEX 3G1 MM2	6.2		AXIS 2 BLADE 3 LUBRICATION	+Q1-AT37.1 (Box on the machine)	+Q1-Y37.11	Aux. Terminal Box
31	+Q1-W112	31051260	CAVO TECNIFLEX 3G1 MM2	6.2		AXIS 2 BLADE 4 LUBRICATION	+Q1-AT37.1 (Box on the machine)	+Q1-Y37.12	Aux. Terminal Box
32	+Q1-W113	31051260	CAVO TECNIFLEX 3G1 MM2	6.2		AXIS 2 BLADE 5 LUBRICATION	+Q1-AT37.1 (Box on the machine)	+Q1-Y37.13	Aux. Terminal Box
33	+Q1-W114	31051260	CAVO TECNIFLEX 3G1 MM2	6.2		AXIS 2 BLADE 6 LUBRICATION	+Q1-AT37.1 (Box on the machine)	+Q1-Y37.14	Aux. Terminal Box
34	+Q1-W115	31051260	CAVO TECNIFLEX 3G1 MM2	6.2		AXIS 2 BLADE 7 LUBRICATION	+Q1-AT37.1 (Box on the machine)	+Q1-Y37.15	Aux. Terminal Box
35	+Q1-W116	31051260	CAVO TECNIFLEX 3G1 MM2	6.2		AXIS 2 BLADE 8 LUBRICATION	+Q1-AT37.1 (Box on the machine)	+Q1-Y37.16	Aux. Terminal Box

Fosber

FOSBER S.p.A.
via Provinciale per Camaiore, 27/28 55060 Monsagrati (Lucca) - ITALIA
T. +39.0583.3891 - F. +39.0583.389205/385567
E-mail: info@fosber.it

TWIN 400 T.1
COMPLESSIVO CAVI BORDO MACCHINA
CONJUNTO CABLES BORDO MAQUINA

customer	CORRUGADORA GUATEMA	REL	L.CENTI	28/06/17	issued	28/06/2017
job nr.	4607	REV			proj. sect.	=TW4+Q1
serial nr.	COM17279	DEF			page	65 of 114

MAIN CONNECTION CABLING CABINET =TW4 +Q1

Nr.	INITIALS	CODE	TYPE	Ø(mm)	LENGTH(mt)	DESCRIPTION	START	ARRIVAL	TERMINAL BOX	TYPE OF NET
						COMMUNICATION WITH +Q0				
1	+Q0+Q1-W01	31051268	TECNIFLEX 4G2.5 MM2	10.6	19	THREE PHASE POWER SUPPLY FOR LOGIC CABINET	+Q0	+Q1	+Q1-X1	POWER
2	+Q0+Q1-W02	31051268	TECNIFLEX 4G2.5 MM2	10.6	19	POWER SUPPLY 220 VAC LOGIC CABINET	+Q0	+Q1	+Q1-X1	POWER
3	+Q0+Q1-W03	31051268	TECNIFLEX 4G2.5 MM2	10.6	19	POWER SUPPLY 24 VDC	+Q0	+Q1	+Q1-X1	AUXILIARY POWER
4	+Q0+Q1-W04	31051266	TECNIFLEX 4G1.5 MM2	7.4	19	POWER SUPPLY 220 VAC DIFFERETIAL VOLTAGE	+Q0	+Q1	+Q1-X2	PLUG AND SERVICE LINE
5										
6	+Q0+Q1-W06	31051243	TECNIFLEX 18G1.5 MM2	14.3	19	INTERFACE WITH +Q0	+Q0	+Q1	+Q1-X3	SEGNALI DI COMUNICAZIONE
7	+Q0+Q1-W07A	31050198	FR((3X2X0,14)+2X(0.50))	8,6	19	ENCODER MEASURE WHELL	+Q0	+Q1	+Q1-XF2	SPEED REFERENCE
8	+Q0+Q1-W08	31050097	OR PMX-ST(2X0,34)	4,9	19	SPEED REFERENCE FOR +Q1	+Q1	+Q0	+Q1-X4	SPEED REFERENCE
9	+Q0+Q1-W09	31050737	YELLOW/GREEN 35 MM²		19	GROUND CONNECTION WITH +Q0	+Q0	+Q1	DIRECT	GROUND CONNECTION
10	+Q0+Q1-W03A	31051268	CAVO TECNIFLEX 4G2.5 MM2	10.6	19	POWER SUPPLY 24 VDC FOR WEB DIRECTOR	+Q1	+Q0	+Q1-X1	AUXILIARY POWER
11										
						COMMUNICATION WITH +C0				
1	+Q1+C0-W00	51294885	DEVICE NET DROP OR.FR	7,2	8	DEVICE NET NETWORK	+Q1	+C0	+Q1-X40	DEVICE-NET NETWORK
2	+Q1+C0-W01	31052086	(2X2XAWG24)SN/ST PVC ETH	6	8	ETHERNET COMUNICATION INTERFACE	+Q1-A22.1	+C0	DIRECTLY	ETHERNET NETWORK
3	+Q1+C0-W02	31051243	TECNIFLEX 18G1.5 MM2	14,3	8	INTERFACE WITH +C0	+Q1	+C0	+Q1-X16	AUXILIARY SIGNAL
						COMMUNICATION WITH +C1				
1										
2										
3										
						COMMUNICATION WITH +B0				
1	+Q1+B0-W01	51294881	CAN OPEN (2X2X0,5)	8		CAN OPEN NETWORK	+B0	+Q1	+Q1-X50	CAN OPEN NETWORK [SERVICE PC]
						COMMUNICATION WITH +Q0				
1	+Q0+Q1-W00	51294887	DEVICE NET TRUNK OR.FR *	11	19	DEVICE-NET NETWORK TO +Q0	+Q1	+Q0	+Q1-X31	DEVICE-NET NETWORK
						COMMUNICATION WITH E+L TRIMMASTER				
	+Q1+EL-W01	31051278	TECNIFLEX 25G1 MM2	15.60		INTERFACE WITH E+L	+Q1	E+L	+Q1-XIF3	AUXILIARY SIGNAL
	+Q1+EL-W02	31050097	OR PMX-ST(2X0,34)	4,9		SPEED REFERENCE FOR E+L	+Q1	E+L	+Q1-XIF3	SPEED REFERENCE

Fosber

FOSBER S.p.A.
via Provinciale per Camaiore, 27/28 55060 Monsagrati (Lucca) - ITALIA
T. +39.0583.3891 - F. +39.0583.389205/385567
E-mail: info@fosber.it

TWIN 400 T.1
COMPLESSIVO CAVI DI CONNESSIONE
CONJUNTO CABLES DE CONEXIÓN

customer	CORRUGADORA GUATEMA	REL	L.CENTI	28/06/17	issued	28/06/2017
job nr.	4607	REV			proj. sect.	=TW4+Q1
serial nr.	COM17279	DEF			page	66 of 114

MAIN CONNECTION CABLING CABINET =TW4 +Q1

Nr.	INITIALS	CODE	TYPE	Ø(mm)	LENGTH(mt)	DESCRIPTION	START	ARRIVAL	TERMINAL BOX	TYPE OF NET
						COMMUNICATION WITH ROTARY SHEAR				
1	=TW4+Q1=ROS+Q0-W00	51294887	CAVO DEVICE NET TRUNK OR.FR	11		DEVICE NET NETWORK FOR COSTANT SYSTEM	+Q1	QE ROTARY SHEAR	QE ROTARY SHEAR	DEVICE NET NETWORK
						COMMUNICATION WITH SYNCRO				
1	=SYC+C0+B22-W01	31052086	(2X2XAWG24)SN/ST PVC ETH	8		ETHERNET CONNECTION WITH DSP400	+Q1	=SYC+C0	+Q1-A28.1	ETHERNET
2	=SYC+C0+B22-W02	31050010	SAB BROCKSKES OCYZ-J 3X1	6.2		TRANSMISSION 24 Vdc FOR DSP400 POWER SUPPLY	+Q1	=SYC+C0	+Q1-X202	POWER SUPPLY
3	=SYC+C0+B22-W04	31050010	SAB BROCKSKES OCYZ-J 3X1	6.2		24 Vdc FOR I/O DSP400	+Q1	=SYC+C0	+Q1-X202	AUXILIARY SIGNAL
4	=SYC+C0+B22-W05	31052086	(2X2XAWG24)SN/ST PVC ETH	8		SOFTWARE CONNECTION WITH SYNCRO PC	+Q1	=SYC+C0	DIRECT	ETHERNET
5	=SYC+C0+B22-W06	31050097	OR PMX-ST(2X0,34)	4.5		SIMULTED ENCODER FROM FOSBER SLITTTER SCORER	+Q1	=SYC+C0	+Q1-XIF2	LOGIC SIGNAL
						COMMUNICATION WITH MODEM SERVICE				
1	+Q0+Q1-W30	31052086	(2X2XAWG24)SN/ST PVC ETH	8		ETHERNET CONNECTION	+Q0	+Q1	+Q1-A22.1	ETHERNET
						COMMUNICATION WITH EMERGENCY CONTROL				
1	=CEC+Q0=TW4+Q1-W01 =SC4+Q0=TW4+Q0-W900	31051276	CAVO TECNIFLEX 10G1,5 MM2			CONNECTION WHITH EMERGENCY CONTROL	+Q1	=CEC+Q0/=SC4+Q0	+Q1-XIF1	

Fosber

FOSBER S.p.A.
via Provinciale per Camaiore, 27/28 55060 Monsagrati (Lucca) - ITALIA
T. +39.0583.3891 - F. +39.0583.389205/385567
E-mail: info@fosber.it

TWIN 400 T.1
COMPLESSIVO CAVI DI CONNESSIONE
CONJUNTO CABLES DE CONEXIÓN

customer	CORRUGADORA GUATEMA	REL	L.CENTI	28/06/17	issued	28/06/2017
job nr.	4607	REV			proj. sect.	=TW4+Q1
serial nr.	COM17279	DEF			page	67 of 114

TERMINAL BOX, CONNECTOR

+Q1-X1

INSIDE CABINET COMPONENT	TERMINAL	NUMB.OF TERMINAL	NUMBER OF WIRE	OUTSIDE CABINET COMPONENT	TERMINAL	DESCRIPTION	CABLE	NUMBER, COLOR
+Q1-Q4.2	L1	1	R3	+Q0-X1	1	LINEA ALIMENTAZIONE PER QUADRO ELETTRICO DI LOGICA + Q1 (R1)	+Q0+Q1-W01	1
+Q1-Q4.2	L2	2	S3	+Q0-X1	2	LINEA ALIMENTAZIONE PER QUADRO ELETTRICO DI LOGICA + Q1 (S1)	+Q0+Q1-W01	2
+Q1-Q4.2	L3	3	T3	+Q0-X1	3	LINEA ALIMENTAZIONE PER QUADRO ELETTRICO DI LOGICA + Q1 (T1)	+Q0+Q1-W01	3
+C1-T3.1	PE	4	PE1	+Q0-X1	4	LINEA ALIMENTAZIONE PER QUADRO ELETTRICO DI LOGICA + Q1 (PE)	+Q0+Q1-W01	Yellow/ Green
+Q1-GS4.2		5	X0.5A	+Q0-X1	5	LINEA ALIMENTAZIONE PER QUADRO ELETTRICO DI LOGICA + Q1 (X0.5)	+Q0+Q1-W02	1
+Q1-Q4.1	1	6	X0.4A	+Q0-X1	6	LINEA ALIMENTAZIONE PER QUADRO ELETTRICO DI LOGICA + Q1 (X0.4)	+Q0+Q1-W02	2
+Q0-K4.2	A2	7	X0.0A	+Q0-X1	7	0 VDC POWER SUPPLY AUXILIARIES	+Q0+Q1-W03	1
+Q1-Q16.1	2	8	16.20	+Q0-X1	8	24 VDC POWER SUPPLY AUXILIARIES	+Q0+Q1-W03	2
		9	X0.3A	+Q0-X1	9	24 VDC POWER SUPPLY NULL SPEED	+Q0+Q1-W03	3
+Q1-K4.3	A2	10	X0.12A	+Q0-X1	10	0 VDC POWER SUPPLY WEB DIRECTOR	+Q0+Q1-W03A	1
+Q1-K12.3	14	11	16.10	+Q0-X1	11	24 VDC POWER SUPPLY AUXILIARY LOGICAL WEB DIRECTOR	+Q0+Q1-W03A	2
+Q1-K4.3	A1	12	X0.13A	+Q0-X1	12	24 VDC POWER SUPLY AUSILIARY LOGICAL WEB DIRECTOR	+Q0+Q1-W03A	3

customer	CORRUGADORA GUATEMA	REL	L.CENTI	28/06/17
job nr.	4607	REV	issued	28/06/2017
serial nr.	COM17279	DEF	proj. sect.	=TW4+Q1
			page	68 of 114

TWIN 400 T.1
MORSETTIERA +Q1-X1
BORNERA +Q1-X1

FOSBER S.p.A.
via Provinciale per Camaiore, 27/28 55060 Monsagrati (Lucca) - ITALIA
T. +39.0583.3891 - F. +39.0583.389205/385567
E-mail: info@fosber.it

TERMINAL BOX, CONNECTOR

+Q1-X2

| | | |

TERMINAL BOX, CONNECTOR

+Q1-X3

INSIDE CABINET COMPONENT	TERMINAL	NUMB.OF TERMINAL	NUMBER OF WIRE	OUTSIDE CABINET COMPONENT	TERMINAL	DESCRIPTION	CABLE	NUMBER, COLOR
+Q1-X16	2	1	13.10	+Q0-X3	9	RESTORE CIRCUIT	+Q0+Q1-W06	9
+Q1-K12.1	S33	2	12.12A	+Q0-X3	8	RESTORE CIRCUIT	+Q0+Q1-W06	8
+Q1-X16	4	3	12.12A	+Q2-X99	23	RESTORE CIRCUIT		
+Q1-X16	6	4	15.37	+Q0-X3	13	EMERGENCY CHANNEL A IES DISCONNECT	+Q0+Q1-W06	13
+Q1-X27	5	5	15.32	+Q0-X3	12	EMERGENCY CHANNEL A IES DISCONNECT	+Q0+Q1-W06	12
+Q1-X16	8	6	15.38	+Q0-X3	15	EMERGENCY CHANNEL B IES DISCONNECT	+Q0+Q1-W06	15
+Q1-X27	7	7	15.29	+Q0-X3	14	EMERGENCY CHANNEL B IES DISCONNECT	+Q0+Q1-W06	14
+Q0-K40.2	14	8	X0.2A	+Q0-X3	1	24 VDC POWER SUPPY (E-STOP CAT.0)	+Q0+Q1-W06	1
+Q1-K12.3	68	9	12.34	+Q0-X3	3	REEL 1 CIRCUIT TRIPLE PHASE DISCONNECTION	+Q0+Q1-W06	3
+Q1-K12.1	2	10	12.12	+Q2-X99	24	RESTORE CIRCUIT		
+Q1-K11.2	14	11	11.13	+Q0-X3	4	CHANGE SIGNALE ORDER	+Q0+Q1-W06	4
+Q1-K12.3	58	12	12.33	+Q0-X3	5	REEL 1 CIRCUIT TRIPLE PHASE DISCONNECTION	+Q0+Q1-W06	5
+Q1-K9.3	21	13	11.14	+Q0-X3	6	RECEIPT POWER SUPPLY TOOLS ADJUSTMENT PHOTOCELLS	+Q0+Q1-W06	6
+Q1-A5.2	IN 12	14	6.17	+Q0-X3	11	ORDER CHANGE SIGNAL FOR WEB DIRECTOR	+Q0+Q1-W06	11
+Q1-K9.3	11	15	X0.1R	+Q0-X3	16	24 VDC SOLENOID VALVE BLADES	+Q0+Q1-W06	16
		17	18.10	+Q0-X3		DECREMENTA VELOCITA' PER TARGHET SPEED	+Q0+Q1-W06	2
		18	18.11	+Q0-X3		ABILITA TARGET SPEEDAVAILABLE	+Q0+Q1-W06	7

REL	L.CENTI	28/06/17	issued 28/06/2017
REV			proj. sect. =TW4+Q1
DEF			page 70 of 114

customer: CORRUGADORA GUATEMA
job nr.: 4607
serial nr.: COM17279

TWIN 400 T.1
MORSETTIERA +Q1-X3
BORNERA +Q1-X3

Fosber
FOSBER S.p.A.
via Provinciale per Camaiore, 27/28 55060 Monsagrati (Lucca) - ITALIA
T. +39.0583.3891 - F. +39.0583.389205/385567
E-mail: info@fosber.it

TERMINAL BOX, CONNECTOR

+Q1-X4

INSIDE CABINET COMPONENT	TERMINAL	NUMB.OF TERMINAL	NUMBER OF WIRE	OUTSIDE CABINET COMPONENT	TERMINAL	DESCRIPTION	CABLE	NUMBER, COLOR
+Q1-A30.1	5	1	30.12	+Q0-X4	2	V SPEED REFERENCE FROM SYNCRO	+Q1+Q0-W08	Red
+Q1-A30.1	6	2	30.13	+Q0-X4	1	V SPEED REFERENCE FROM SYNCRO	+Q1+Q0-W08	White
		3	sch	+Q0-X4	3	V SPEED REFERENCE FROM SYNCRO	+Q1+Q0-W08	Bare

Fosber

FOSBER S.p.A.
via Provinciale per Camaiore, 27/28 55060 Monsagrati (Lucca) - ITALIA
T. +39.0583.3891 - F. +39.0583.389205/385567
E-mail: info@fosber.it

TWIN 400 T.1
MORSETTIERA +Q1-X4
TABLERO DE BORNES +Q1-X4

customer	CORRUGADORA GUATEMA	REL	L.CENTI	28/06/17	issued	28/06/2017
job nr.	4607	REV			proj. sect.	=TW4+Q1
serial nr.	COM17279	DEF			page	71 of 114

TERMINAL BOX, CONNECTOR

+Q1-X9

INSIDE CABINET COMPONENT	TERMINAL	NUMB.OF TERMINAL	NUMBER OF WIRE	OUTSIDE CABINET COMPONENT	TERMINAL	DESCRIPTION	CABLE	NUMBER, COLOR
+Q1-A5.2	IN 13	1	6.18	+C0-Z6.1	Black	PRESENCE SUFFICIENT AIR	+Q1-W24	Yellow
+Q0-M4.1	4	2	X0.1A	+C0-Z6.1	Brown	24 VDC ALIMENTAZIONE PRESSOSTATO GENERALE ARIA	+Q1-W24	Brown
+Q1-A5.2	IN 14	3	6.19	+C0-Z6.1	White	PRESENCE INSUFFICIENT AIR	+Q1-W24	Green
+Q0-K4.2	A2	4	X0.0A	+C0-Z6.1	Blue	0 VDC ALIMENTAZIONE PRESSOSTATO GENERALE ARIA	+Q1-W24	Blue

FOSBER S.p.A.
via Provinciale per Camaiore, 27/28 55060 Monsagrati (Lucca) - ITALIA
T. +39.0583.3891 - F. +39.0583.389205/385567
E-mail: info@fosber.it

TWIN 400 T.1
MORSETTIERA +Q1-X9
TABLERO DE BORNES +Q1-X9

customer	CORRUGADORA GUATEMA	REL	L.CENTI	28/06/17	issued	28/06/2017
job nr.	4607	REV			proj. sect.	=TW4+Q1
serial nr.	COM17279	DEF			page	72 of 114

TERMINAL BOX, CONNECTOR

+Q1-X14

INSIDE CABINET COMPONENT	TERMINAL	NUMB.OF TERMINAL	NUMBER OF WIRE	OUTSIDE CABINET COMPONENT	TERMINAL	DESCRIPTION	CABLE	NUMBER, COLOR
+Q1-A5.5	OUT 4	1	9.14	+Q1-H9.1	1	ALARM SIGNALING	+Q1-W16	2
+Q1-K9.4	A2	2	X0.0A	+Q1-H9.1	8	0 VDC LAMP ALLARM	+Q1-W16	1
+Q1-A5.5	OUT 5	3	9.15	+Q1-H9.2	2	SIGNALLING FOR ROBOT IN MOVEMENT	+Q1-W16	3
+Q1-A5.5	OUT 6	4	9.16	+Q1-H9.3	3	SIGNALING FOR MACHINE OKAY	+Q1-W16	4
+Q1-A5.5	OUT 7	5	9.17	+Q1-HA9.1	6	ACOUSTIC WARNING SIGNALLING	+Q1-W16	5

Fosber

FOSBER S.p.A.
via Provinciale per Camaiore, 27/28 55060 Monsagrati (Lucca) - ITALIA
T. +39.0583.3891 - F. +39.0583.389205/385567
E-mail: info@fosber.it

TWIN 400 T.1
MORSETTIERA +Q1-X14
TABLERO DE BORNES +Q1-X14

customer	CORRUGADORA GUATEMA	REL	L.CENTI	28/06/17	issued	28/06/2017
job nr.	4607	REV			proj. sect.	=TW4+Q1
serial nr.	COM17279	DEF			page	73 of 114

TERMINAL BOX, CONNECTOR

+Q1-X15

INSIDE CABINET COMPONENT	TERMINAL	NUMB.OF TERMINAL	NUMBER OF WIRE	OUTSIDE CABINET COMPONENT	TERMINAL	DESCRIPTION	CABLE	NUMBER, COLOR
+Q1-A5.2	IN 15	1	6.20	+Q1-SA12.1 +Q1-SA12.2	21	BLADES SELECTOR WORKING FOR ADJUSTMENT	+Q1-W04 +Q1-W05	6 6
+Q1-A5.3	IN 8	2	7.18	+Q1-SA7.1	13	BLADES WORKING BUTTON FOR ADJUSTMENT (NON OPERATOR SIDE)	+Q1-W04	5
+Q1-A5.3	IN 9	3	7.19	+Q1-SA7.2	13	BLADES WORKING BUTTON FOR ADJUSTMENT (OPERATOR SIDE)	+Q1-W05	5
+Q0-M4.1	4	4	X0.1A	+Q1-SA12.2 +Q1-SA12.1	13 13	RICHIESTA COLTELLI IN LAVORO	+Q1-W04 +Q1-W05	1 1
+Q1-K9.3	14	5	12.30	+Q1-SA12.2 +Q1-SA12.1	14 14	RICHIESTA COLTELLI IN LAVORO	+Q1-W04 +Q1-W05	4 4
+Q1-A5.5	OUT 10	6	9.20	+Q1-HA9.7	1	SEGNALAZIONE SONORA PER ALLINEAMENTO LAME	+Q1-W04	3
+Q1-GS4.1	- V	7	X0.0A	+Q1-HA9.7	2	SEGNALAZIONE SONORA PER ALLINEAMENTO LAME	+Q1-W04	2
+Q1-A35.1	IN14	8	35.24	+Q1-SA35.3	13	CARICAMENTO MANUALE TEFLON ASSE 1	+Q1-W05	2
+Q1-A35.1	IN15	9	35.25	+Q1-SA35.3	23	CARICAMENTO MANUALE TEFLON ASSE 2	+Q1-W05	3

customer	CORRUGADORA GUATEMA	REL	L.CENTI	28/06/17	issued	28/06/2017
job nr.	4607	REV			proj. sect.	=TW4+Q1
serial nr.	COM17279	DEF			page	74 of 114

TWIN 400 T.1
MORSETTIERA +Q1-X15
BORNERA +Q1-X15

FOSBER S.p.A.
via Provinciale per Camaiore, 27/28 55060 Monsagrati (Lucca) - ITALIA
T. +39.0583.3891 - F. +39.0583.389205/385567
E-mail: info@fosber.it

TERMINAL BOX, CONNECTOR

+Q1-X16

INSIDE CABINET COMPONENT	TERMINAL	NUMB.OF TERMINAL	NUMBER OF WIRE	OUTSIDE CABINET COMPONENT	TERMINAL	DESCRIPTION	CABLE	NUMBER, COLOR
+Q0-K4.2	A2	1	X0.0A	+C0-X16	1	0 VDC POWER SUPPLY AUXILIARIES	+Q1+C0-W02	1
+Q1-Q19.1	2	2	19.10	+C0-X16	2	24 VDC POWER SUPPLY AUXILIARIES	+Q1+C0-W02	2
+Q1-X18	1	3	15.28	+C0-X16	6	E - STOP CHANNEL A	+Q1+C0-W02	5
+Q1-X3	4	4	15.37	+C0-X16	5	E - STOP CHANNEL A	+Q1+C0-W02	6
+Q1-X18	3	5	15.34	+C0-X16	8	E - STOP CHANNEL B	+Q1+C0-W02	7
+Q1-X3	6	6	15.38	+C0-X16	7	E - STOP CHANNEL B	+Q1+C0-W02	8
+Q1-X18	8	7	24.11	+C0-X16	10	E-STOP CHANNEL A EXTERNAL	+Q1+C0-W02	9
+Q1-XIF1	5	8	24.12	+C0-X16	9	E-STOP CHANNEL A EXTERNAL	+Q1+C0-W02	10
+Q1-X18	10	9	24.15	+C0-X16	12	E-STOP CHANNEL B EXTERNAL	+Q1+C0-W02	11
+Q1-XIF1	7	10	24.16	+C0-X16	11	E-STOP CHANNEL B EXTERNAL	+Q1+C0-W02	12
+Q1-X18	12	11	24.19	+C0-X16	14	E-STOP TO SUPERVISOR	+Q1+C0-W02	13
+C0-X16	13	12	24.20	+Q1-XIF1	9	E-STOP TO SUPERVISOR	+Q1+C0-W02	14
+C0-X16	10	13	24.12	+Q2-X99	19	E-STOP CHANNEL A EXTERNAL		
+Q2-X99	20	14	24.13	+C0-X16	16	E-STOP CHANNEL A EXTERNAL		
+C0-X16	12	15	24.16	+Q2-X99	21	E-STOP CHANNEL B EXTERNAL		
+Q2-X99	22	16	24.17	+C0-X16	18	E-STOP CHANNEL B EXTERNAL		

REL	L.CENTI	28/06/17	issued 28/06/2017
REV			proj. sect. =TW4+Q1
DEF			page 75 of 114

customer: CORRUGADORA GUATEMA
job nr.: 4607
serial nr.: COM17279

TWIN 400 T.1
MORSETTIERA +Q1-X16
TABLERO DE BORNES +Q1-X16

Fosber
FOSBER S.p.A.
via Provinciale per Camaiore, 27/28 55060 Monsagrati (Lucca) - ITALIA
T. +39.0583.3891 - F. +39.0583.389205/385567
E-mail: info@fosber.it

TERMINAL BOX, CONNECTOR

+Q1-X18

INSIDE CABINET COMPONENT	TERMINAL	NUMB.OF TERMINAL	NUMBER OF WIRE	OUTSIDE CABINET COMPONENT	TERMINAL	DESCRIPTION	CABLE	NUMBER, COLOR
+Q1-X16	5	1	15.28	+Q1-X18	2	EMERGENCY - CHANNEL A	+Q1+C1-W02	3
+Q1-XIF1	2	2	15.28	+Q1-X18	1	EMERGENCY - CHANNEL A	+Q1+C1-W02	4
+Q1-X16	7	3	15.34	+Q1-X18	4	EMERGENCY - CHANNEL B	+Q1+C1-W02	5
+Q1-XIF1	4	4	15.34	+Q1-X18	3	EMERGENCY - CHANNEL B	+Q1+C1-W02	6
+Q0-K4.2	A2	5	X0.0A	+C1-X18	1	0 VDC POWER SUPPLY AUXILIARIES	+Q1+C1-W02	1
+Q1-Q19.2	2	6	19.11	+C1-X18	2	24 VDC POWER SUPPLY AUXILIARIES	+Q1+C1-W02	2
+Q1-XIF1	6	7	24.10	+Q1-X18	8	E-STOP CHANNEL A EXTERNAL	+Q1+C1-W02	8
+Q1-X16	11	8	24.11	+Q1-X18	7	E-STOP CHANNEL A EXTERNAL	+Q1+C1-W02	7
+Q1-XIF1	8	9	24.14	+Q1-X18	10	E-STOP CHANNEL B INTERNAL	+Q1+C1-W02	10
+Q1-X16	13	10	24.15	+Q1-X18	9	E-STOP CHANNEL B INTERNAL	+Q1+C1-W02	9
+Q1-XIF1	10	11	24.18	+Q1-X18	12	E-STOP TO SUPERVISOR	+Q1+C1-W02	12
+Q1-X18	11	12	24.19	+Q1-X16	15	E-STOP TO SUPERVISOR	+Q1+C1-W02	11
+Q1-X18	2	13	15.28	+Q2-X99	16	EMERGENCY - CHANNEL A		
+Q1-X18	13	14	15.28	+Q1-XIF1	2	EMERGENCY - CHANNEL A		
+Q1-X18	4	15	15.34	+Q2-X99	15	EMERGENCY - CHANNEL B		
+Q1-X18	15	16	15.34	+Q1-XIF1	4	EMERGENCY - CHANNEL B		

customer	CORRUGADORA GUATEMA	REL	L.CENTI	28/06/17	issued	28/06/2017
job nr.	4607	REV			proj. sect.	=TW4+Q1
serial nr.	COM17279	DEF			page	76 of 114

TWIN 400 T.1
MORSETTIERA +Q1-X18
TABLERO DE BORNES +Q1-X18

FOSBER S.p.A.
via Provinciale per Camaiore, 27/28 55060 Monsagrati (Lucca) - ITALIA
T. +39.0583.3891 - F. +39.0583.389205/385567
E-mail: info@fosber.it

TERMINAL BOX, CONNECTOR

+Q1-X20

INSIDE CABINET COMPONENT
TERMINAL
NUMB.OF TERMINAL
NUMBER OF WIRE
OUTSIDE CABINET COMPONENT
TERMINAL
DESCRIPTION
CABLE
NUMBER, COLOR

Fosber

FOSBER S.p.A.
via Provinciale per Camaiore, 27/28 55060 Monsagrati (Lucca) - ITALIA
T. +39.0583.3891 - F. +39.0583.389205/385567
E-mail: info@fosber.it

TWIN 400 T.1
MORSETTIERA +Q1-X20
TABLERO DE BORNES +Q1-X20

customer	CORRUGADORA GUATEMA	REL	L.CENTI	28/06/17	issued	28/06/2017
job nr.	4607	REV			proj. sect.	=TW4+Q1
serial nr.	COM17279	DEF			page	77 of 114

TERMINAL BOX, CONNECTOR

+Q1-X21

INSIDE CABINET COMPONENT	TERMINAL	NUMB.OF TERMINAL	NUMBER OF WIRE	OUTSIDE CABINET COMPONENT	TERMINAL	DESCRIPTION	CABLE	NUMBER, COLOR
+Q1-Q4.3	2	1	X0.1A	+Q1-S14.1	2/Bn	AUXILIARY POWER SUPPLY +24 Vdc GENERAL	+Q1-W25	Bn
+Q1-A5.3	IN 10	2	7.20	+Q1-S14.1	1/Wh	PORTA APERTA CARTER SX Q.E. POTENZA	+Q1-W25	Wh
+Q1-GS4.1	- V	3	X0.0A	+Q1-S14.1	7/Bu	AUXILIARY POWER SUPPLY 0 Vdc	+Q1-W25	Bu
+Q1-GS4.1	- V	4	14.20	+Q1-S14.1	3/Gn	AUXILIARY POWER SUPPLY 0 Vdc	+Q1-W25	Gn
+Q1-Q4.3	2	5	X0.1A	+Q1-S14.1	8/Rd	SICUREZZA A+	+Q1-W25	Rd
+Q1-Q4.3	2	6	X0.1A	+Q1-S14.1	4/Yw	SICUREZZA B+	+Q1-W25	Yw
+Q1-X22	5	7	14.10	+Q1-S14.1	5/Gy	SICUREZZA A	+Q1-W25	Gy
+Q1-X22	6	8	14.11	+Q1-S14.1	6/Pk	SICUREZZA B	+Q1-W25	Pk

REL	L.CENTI	28/06/17	issued 28/06/2017
REV			proj. sect. =TW4+Q1
DEF			page 78 of 114

customer: CORRUGADORA GUATEMA
job nr.: 4607
serial nr.: COM17279

TWIN 400 T.1
MORSETTIERA +Q1-X21
TABLERO DE BORNES +Q1-X21

Fosber
FOSBER S.p.A.
via Provinciale per Camaiore, 27/28 55060 Monsagrati (Lucca) - ITALIA
T. +39.0583.3891 - F. +39.0583.389205/385567
E-mail: info@fosber.it

TERMINAL BOX, CONNECTOR

+Q1-X22

INSIDE CABINET COMPONENT	TERMINAL	NUMB.OF TERMINAL	NUMBER OF WIRE	OUTSIDE CABINET COMPONENT	TERMINAL	DESCRIPTION	CABLE	NUMBER, COLOR
+Q1-Q4.3	2	1	X0.1A	+Q1-S14.2	2/Bn	AUXILIARY POWER SUPPLY +24 Vdc GENERAL	+Q1-W26	Bn
+Q1-A5.3	IN 11	2	7.21	+Q1-S14.2	1/Wh	PORTA APERTA CARTER DX Q.E. LOGICA	+Q1-W26	Wh
+Q1-GS4.1	- V	3	X0.0A	+Q1-S14.2	7/Bu	AUXILIARY POWER SUPPLY 0 Vdc	+Q1-W26	Bu
+Q1-GS4.1	- V	4	14.21	+Q1-S14.2	3/Gn	AUXILIARY POWER SUPPLY 0 Vdc	+Q1-W26	Gn
+Q1-X21	7	5	14.10	+Q1-S14.2	8/Rd	SICUREZZA A+	+Q1-W26	Rd
+Q1-X21	8	6	14.11	+Q1-S14.2	4/Yw	SICUREZZA B+	+Q1-W26	Yw
+Q1-X23	5	7	14.12	+Q1-S14.2	5/Gy	SICUREZZA A	+Q1-W26	Gy
+Q1-X23	6	8	14.13	+Q1-S14.2	6/Pk	SICUREZZA B	+Q1-W26	Pk

customer	CORRUGADORA GUATEMA	REL	L.CENTI	28/06/17	issued	28/06/2017
job nr.	4607	REV			proj. sect.	=TW4+Q1
serial nr.	COM17279	DEF			page	79 of 114

TWIN 400 T.1
MORSETTIERA +Q1-X22
TABLERO DE BORNES +Q1-X22

Fosber
FOSBER S.p.A.
via Provinciale per Camaiore, 27/28 55060 Monsagrati (Lucca) - ITALIA
T. +39.0583.3891 - F. +39.0583.389205/385567
E-mail: info@fosber.it

TERMINAL BOX, CONNECTOR

+Q1-X23

INSIDE CABINET COMPONENT	TERMINAL	NUMB.OF TERMINAL	NUMBER OF WIRE	OUTSIDE CABINET COMPONENT	TERMINAL	DESCRIPTION	CABLE	NUMBER, COLOR
+Q1-Q4.3	2	1	X0.1A	+Q1-S14.3	2/Bn	AUXILIARY POWER SUPPLY +24 Vdc GENERAL	+Q1-W27	Bn
+Q1-A5.3	IN 12	2	7.22	+Q1-S14.3	1/Wh	PORTA APERTA CARTER SX USCITA CARTONE	+Q1-W27	Wh
+Q1-GS4.1	- V	3	X0.0A	+Q1-S14.3	7/Bu	AUXILIARY POWER SUPPLY 0 Vdc	+Q1-W27	Bu
+Q1-GS4.1	- V	4	14.22	+Q1-S14.3	3/Gn	AUXILIARY POWER SUPPLY 0 Vdc	+Q1-W27	Gn
+Q1-X22	7	5	14.12	+Q1-S14.3	8/Rd	SICUREZZA A+	+Q1-W27	Rd
+Q1-X22	8	6	14.13	+Q1-S14.3	4/Yw	SICUREZZA B+	+Q1-W27	Yw
+Q1-X24	5	7	14.14	+Q1-S14.3	5/Gy	SICUREZZA A	+Q1-W27	Gy
+Q1-X24	6	8	14.15	+Q1-S14.3	6/Pk	SICUREZZA B	+Q1-W27	Pk

customer	CORRUGADORA GUATEMA	REL	L.CENTI	28/06/17	issued	28/06/2017
job nr.	4607	REV			proj. sect.	=TW4+Q1
serial nr.	COM17279	DEF			page	80 of 114

TWIN 400 T.1
MORSETTIERA +Q1-X23
TABLERO DE BORNES +Q1-X23

FOSBER S.p.A.
via Provinciale per Camaiore, 27/28 55060 Monsagrati (Lucca) - ITALIA
T. +39.0583.3891 - F. +39.0583.389205/385567
E-mail: info@fosber.it

TERMINAL BOX, CONNECTOR

+Q1-X24

INSIDE CABINET COMPONENT	TERMINAL	NUMB.OF TERMINAL	NUMBER OF WIRE	OUTSIDE CABINET COMPONENT	TERMINAL	DESCRIPTION	CABLE	NUMBER, COLOR
+Q1-Q4.3	2	1	X0.1A	+Q1-S14.4	2/Bn	AUXILIARY POWER SUPPLY +24 Vdc GENERAL	+Q1-W28	Bn
+Q1-A5.3	IN 13	2	7.23	+Q1-S14.4	1/Wh	PORTA APERTA CARTER DX USCITA CARTONE	+Q1-W28	Wh
+Q1-GS4.1	- V	3	X0.0A	+Q1-S14.4	7/Bu	AUXILIARY POWER SUPPLY 0 Vdc	+Q1-W28	Bu
+Q1-GS4.1	- V	4	14.23	+Q1-S14.4	3/Gn	AUXILIARY POWER SUPPLY 0 Vdc	+Q1-W28	Gn
+Q1-X23	7	5	14.14	+Q1-S14.4	8/Rd	SICUREZZA A+	+Q1-W28	Rd
+Q1-X23	8	6	14.15	+Q1-S14.4	4/Yw	SICUREZZA B+	+Q1-W28	Yw
+Q1-X25	5	7	14.16	+Q1-S14.4	5/Gy	SICUREZZA A	+Q1-W28	Gy
+Q1-X25	6	8	14.17	+Q1-S14.4	6/Pk	SICUREZZA B	+Q1-W28	Pk

customer	CORRUGADORA GUATEMA	REL	L.CENTI	28/06/17
job nr.	4607	REV	issued	28/06/2017
serial nr.	COM17279	DEF	proj. sect.	=TW4+Q1
			page	81 of 114

TWIN 400 T.1
MORSETTIERA +Q1-X24
TABLERO DE BORNES +Q1-X24

Fosber
FOSBER S.p.A.
via Provinciale per Camaiore, 27/28 55060 Monsagrati (Lucca) - ITALIA
T. +39.0583.3891 - F. +39.0583.389205/385567
E-mail: info@fosber.it

TERMINAL BOX, CONNECTOR

+Q1-X25

INSIDE CABINET COMPONENT	TERMINAL	NUMB.OF TERMINAL	NUMBER OF WIRE	OUTSIDE CABINET COMPONENT	TERMINAL	DESCRIPTION	CABLE	NUMBER, COLOR
+Q1-Q4.3	2	1	X0.1A	+Q1-S14.5	2/Bn	AUXILIARY POWER SUPPLY +24 Vdc GENERAL	+Q1-W29	Bn
+Q1-A5.3	IN 14	2	7.24	+Q1-S14.5	1/Wh	PORTA APERTA CARTER OPT INGRESSO CARTONE	+Q1-W29	Wh
+Q1-GS4.1	- V	3	X0.0A	+Q1-S14.5	7/Bu	AUXILIARY POWER SUPPLY 0 Vdc	+Q1-W29	Bu
+Q1-GS4.1	- V	4	14.24	+Q1-S14.5	3/Gn	AUXILIARY POWER SUPPLY 0 Vdc	+Q1-W29	Gn
+Q1-X24	7	5	14.16	+Q1-S14.5	8/Rd	SICUREZZA A+	+Q1-W29	Rd
+Q1-X24	8	6	14.17	+Q1-S14.5	4/Yw	SICUREZZA B+	+Q1-W29	Yw
+Q1-K14.1	A1	7	14.18	+Q1-S14.5	5/Gy	SICUREZZA A	+Q1-W29	Gy
+Q1-K14.2	A1	8	14.19	+Q1-S14.5	6/Pk	SICUREZZA B	+Q1-W29	Pk

customer	CORRUGADORA GUATEMA	REL	L.CENTI	28/06/17	issued 28/06/2017
job nr.	4607	REV			proj. sect. =TW4+Q1
serial nr.	COM17279	DEF			page 82 of 114

TWIN 400 T.1
MORSETTIERA +Q1-X25
BORNERA +Q1-X25

Fosber
FOSBER S.p.A.
via Provinciale per Camaiore, 27/28 55060 Monsagrati (Lucca) - ITALIA
T. +39.0583.3891 - F. +39.0583.389205/385567
E-mail: info@fosber.it

TERMINAL BOX, CONNECTOR

INSIDE CABINET COMPONENT
TERMINAL
NUMB.OF TERMINAL
NUMBER OF WIRE
OUTSIDE CABINET COMPONENT
TERMINAL
DESCRIPTION
CABLE
NUMBER, COLOR

Fosber

FOSBER S.p.A.
via Provinciale per Camaiore, 27/28 55060 Monsagrati (Lucca) - ITALIA
T. +39.0583.3891 - F. +39.0583.389205/385567
E-mail: info@fosber.it

TWIN 400 T.1
MORSETTIERA +Q1-X29
TABLERO DE BORNES +Q1-X29

customer	CORRUGADORA GUATEMA	REL	L.CENTI	28/06/17	issued	28/06/2017
job nr.	4607	REV			proj. sect.	=TW4+Q1
serial nr.	COM17279	DEF			page	83 of 114

TERMINAL BOX, CONNECTOR

+Q1-X31

INSIDE CABINET COMPONENT	TERMINAL	NUMB.OF TERMINAL	NUMBER OF WIRE	OUTSIDE CABINET COMPONENT	TERMINAL	DESCRIPTION	CABLE	NUMBER, COLOR
+Q1-X40	Black	1	V-	+Q0-X31	1	DEVICE-NET TO (+Q0)	+Q1+Q0-W00	Black
+Q1-X40	red	2	V+	+Q0-X31	2	DEVICE-NET TO (+Q0)	+Q1+Q0-W00	Red
+Q1-X40	blue	3	CAN L	+Q0-X31	3	DEVICE-NET TO (+Q0)	+Q1+Q0-W00	Blue
+Q1-X40	white	4	CAN H	+Q0-X31	4	DEVICE-NET TO (+Q0)	+Q1+Q0-W00	White
+Q1-X40	bare	5	DRAIN	+Q0-X31	5	DEVICE-NET TO (+Q0)	+Q1+Q0-W00	Bare

FOSBER S.p.A.
via Provinciale per Camaiore, 27/28 55060 Monsagrati (Lucca) - ITALIA
T. +39.0583.3891 - F. +39.0583.389205/385567
E-mail: info@fosber.it

TWIN 400 T.1
MORSETTIERA +Q1-X31
TABLERO DE BORNES +Q1-X31

customer	CORRUGADORA GUATEMA	REL	L.CENTI	28/06/17	issued	28/06/2017
job nr.	4607	REV			proj. sect.	=TW4+Q1
serial nr.	COM17279	DEF			page	84 of 114

TERMINAL BOX, CONNECTOR

+Q1-X36

INSIDE CABINET COMPONENT	TERMINAL	NUMB.OF TERMINAL	NUMBER OF WIRE	OUTSIDE CABINET COMPONENT	TERMINAL	DESCRIPTION	CABLE	NUMBER, COLOR
+Q1-X40	1	1	V-	+C1-X36	1	NET DEVICE FOR SYNCRO STAND ALONE (+C1)		Black
+Q1-X40	2	2	V+	+Q1-R21.1		NET DEVICE FOR SYNCRO STAND ALONE (+C1)		Red
+Q1-X40	4	3	CAN_H	+Q1-R21.1		NET DEVICE FOR SYNCRO STAND ALONE (+C1)		Blue
+Q1-X40	3	4	CAN_L	+C1-X36	4	NET DEVICE FOR SYNCRO STAND ALONE (+C1)		White
+Q1-X40	5	5	DRAIN	+C1-X36	5	NET DEVICE FOR SYNCRO STAND ALONE (+C1)		Drain

FOSBER S.p.A.
via Provinciale per Camaiore, 27/28 55060 Monsagrati (Lucca) - ITALIA
T. +39.0583.3891 - F. +39.0583.389205/385567
E-mail: info@fosber.it

TWIN 400 T.1
MORSETTIERA +Q1-X36
TABLERO DE BORNES +Q1-X36

customer	CORRUGADORA GUATEMA	REL	L.CENTI	28/06/17	issued	28/06/2017
job nr.	4607	REV			proj. sect.	=TW4+Q1
serial nr.	COM17279	DEF			page	85 of 114

TERMINAL BOX, CONNECTOR

+Q1-X40

INSIDE CABINET COMPONENT	TERMINAL	NUMB.OF TERMINAL	NUMBER OF WIRE	OUTSIDE CABINET COMPONENT	TERMINAL	DESCRIPTION	CABLE	NUMBER, COLOR
+Q1-X33	1	1	V-			NET DEVICE FOR OUTLET CONSOLE (+C0)	+Q1+C0-W00	Black
+Q1-X33	2	2	V+			NET DEVICE FOR OUTLET CONSOLE (+C0)	+Q1+C0-W00	Red
+Q1-X33	3	3	CAN_L			NET DEVICE FOR OUTLET CONSOLE (+C0)	+Q1+C0-W00	Blue
+Q1-X33	4	4	CAN_H			NET DEVICE FOR OUTLET CONSOLE (+C0)	+Q1+C0-W00	White
+Q1-X33	5	5	DRAIN			NET DEVICE FOR OUTLET CONSOLE (+C0)	+Q1+C0-W00	drain

REL	L.CENTI	28/06/17	issued 28/06/2017
REV			proj. sect. =TW4+Q1
DEF			page 86 of 114

customer: CORRUGADORA GUATEMA
job nr.: 4607
serial nr.: COM17279

TWIN 400 T.1
MORSETTIERA +Q1-X40
BORNERA +Q1-X40

Fosber
FOSBER S.p.A.
via Provinciale per Camaiore, 27/28 55060 Monsagrati (Lucca) - ITALIA
T. +39.0583.3891 - F. +39.0583.389205/385567
E-mail: info@fosber.it

TERMINAL BOX, CONNECTOR

+Q1-X47

INSIDE CABINET COMPONENT	TERMINAL	NUMB.OF TERMINAL	NUMBER OF WIRE	OUTSIDE CABINET COMPONENT	TERMINAL	DESCRIPTION	CABLE	NUMBER, COLOR
+Q1-K9.3	21	1	11.14	+Q1-XB47A.1	1	ENABLING PHOTOCELL EMITTER AXIS 1TOOLS ADJUSTMENT	+Q0-W17A	Brown
+Q0-K4.2	A2	2	X0.0A	+Q1-XB47A.2	1	PHOTOCELL EMITTER POWER SUPPLY AXIS 1 TOOLS ADJUSTMENT	+Q0-W17A	White
+Q1-K9.3	21	3	11.14	+Q1-XB47B.1	1	ENABLING PHOTOCELL EMITTER AXIS 2TOOLS ADJUSTMENT	+Q0-W18A	Brown
+Q0-K4.2	A2	4	X0.0A	+Q1-XB47B.2	1	PHOTOCELL EMITTER POWER SUPPLY AXIS 2 TOLLS ADJUSTMENT	+Q0-W18A	White

Fosber

FOSBER S.p.A.
via Provinciale per Camaiore, 27/28 55060 Monsagrati (Lucca) - ITALIA
T. +39.0583.3891 - F. +39.0583.389205/385567
E-mail: info@fosber.it

TWIN 400 T.1
MORSETTIERA +Q1-X47
BORNERA +Q1-X47

customer	CORRUGADORA GUATEMA	REL	L.CENTI	28/06/17	issued	28/06/2017
job nr.	4607	REV			proj. sect.	=TW4+Q1
serial nr.	COM17279	DEF			page	87 of 114

TERMINAL BOX, CONNECTOR

+Q1-X50

INSIDE CABINET COMPONENT	TERMINAL	NUMB.OF TERMINAL	NUMBER OF WIRE	OUTSIDE CABINET COMPONENT	TERMINAL	DESCRIPTION	CABLE	NUMBER, COLOR
+Q1-X51	1	1	HI			[CAN HI]	+B0+Q1-W01	yellow
+Q1-X51	2	2	LO			[CAN LO]	+B0+Q1-W01	green
+Q1-X51	3	3	GND			[CAN GND]	+B0+Q1-W01	white/brown
+Q1-X51	4	4	Sch			[CAN SCH]	+B0+Q1-W01	bare

Fosber

FOSBER S.p.A.
via Provinciale per Camaiore, 27/28 55060 Monsagrati (Lucca) - ITALIA
T. +39.0583.3891 - F. +39.0583.389205/385567
E-mail: info@fosber.it

TWIN 400 T.1
MORSETTIERA +Q1-X50
BORNERA +Q1-X50

customer	CORRUGADORA GUATEMA	REL	L.CENTI	28/06/17	issued	28/06/2017
job nr.	4607	REV			proj. sect.	=TW4+Q1
serial nr.	COM17279	DEF			page	88 of 114

TERMINAL BOX, CONNECTOR

+Q1-X51

INSIDE CABINET COMPONENT	TERMINAL	NUMB.OF TERMINAL	NUMBER OF WIRE	OUTSIDE CABINET COMPONENT	TERMINAL	DESCRIPTION	CABLE	NUMBER, COLOR
+Q1-X50	1	1	HI			CAN OPEN NETWORK FOR PC CONNECTION		white
+Q1-X50	2	2	LO			CAN OPEN NETWORK FOR PC CONNECTION		blue
+Q1-X50	3	3	GND			CAN OPEN NETWORK FOR PC CONNECTION		red+black
+Q1-X50	4	4	Sch			CAN OPEN NETWORK FOR PC CONNECTION		bare

Fosber

FOSBER S.p.A.
via Provinciale per Camaiore, 27/28 55060 Monsagrati (Lucca) - ITALIA
T. +39.0583.3891 - F. +39.0583.389205/385567
E-mail: info@fosber.it

TWIN 400 T.1
MORSETTIERA +Q1-X51
TABLERO DE BORNES +Q1-X51

customer	CORRUGADORA GUATEMA	REL	L.CENTI	28/06/17	issued	28/06/2017
job nr.	4607	REV			proj. sect.	=TW4+Q1
serial nr.	COM17279	DEF			page	89 of 114

TERMINAL BOX, CONNECTOR

+Q1-X52

INSIDE CABINET COMPONENT	TERMINAL	NUMB.OF TERMINAL	NUMBER OF WIRE	OUTSIDE CABINET COMPONENT	TERMINAL	DESCRIPTION	CABLE	NUMBER, COLOR
+Q1-A5.5	OUT 8	1	9.18	+Q1-Y9.3	1	SV LOWER BLADES CONTROL CONTINUOUS TRIM	+Q1-W22	1
+Q0-K4.2	A2	2	X0.0A	+Q1-Y9.3	2	SV LOWER BLADES CONTROL CONTINUOUS TRIM	+Q1-W22	2
+Q1-A5.5	OUT 9	3	9.19	+Q1-Y9.4	1	SV LIFT BLADES CONTROL CONTINUOUS TRIM	+Q1-W23	1
+Q0-K4.2	A2	4	X0.0A	+Q1-Y9.4	2	SV LIFT BLADES CONTROL CONTINUOUS TRIM	+Q1-W23	2

FOSBER S.p.A.
via Provinciale per Camaiore, 27/28 55060 Monsagrati (Lucca) - ITALIA
T. +39.0583.3891 - F. +39.0583.389205/385567
E-mail: info@fosber.it

TWIN 400 T.1
MORSETTIERA +Q1-X52
BORNERA +Q1-X52

customer	CORRUGADORA GUATEMA	REL	L.CENTI	28/06/17	issued	28/06/2017
job nr.	4607	REV			proj. sect.	=TW4+Q1
serial nr.	COM17279	DEF			page	90 of 114

TERMINAL BOX, CONNECTOR

+Q1-X55

INSIDE CABINET COMPONENT	TERMINAL	NUMB.OF TERMINAL	NUMBER OF WIRE	OUTSIDE CABINET COMPONENT	TERMINAL	DESCRIPTION	CABLE	NUMBER, COLOR
+Q1-X50	1	1	HI	+Q2-X99	1	CAN-OPEN NETWORK - HI		white
+Q1-X51	2	2	LO	+Q2-X99	2	CAN-OPEN NETWORK - LO		blue
+Q1-X51	3	3	GND	+Q2-X99	3	CAN-OPEN NETWORK - GND		red+black
+Q1-X50	4	4	Sch	+Q2-X99	4	CAN-OPEN NETWORK - SCH		bare

Fosber

FOSBER S.p.A.
via Provinciale per Camaiore, 27/28 55060 Monsagrati (Lucca) - ITALIA
T. +39.0583.3891 - F. +39.0583.389205/385567
E-mail: info@fosber.it

TWIN 400 T.1
MORSETTIERA +Q1-X55
TABLERO DE BORNES +Q1-X55

customer	CORRUGADORA GUATEMA	REL	L.CENTI	28/06/17	issued	28/06/2017
job nr.	4607	REV			proj. sect.	=TW4+Q1
serial nr.	COM17279	DEF			page	91 of 114

TERMINAL BOX, CONNECTOR

+Q1-X56

INSIDE CABINET COMPONENT	TERMINAL	NUMB.OF TERMINAL	NUMBER OF WIRE	OUTSIDE CABINET COMPONENT	TERMINAL	DESCRIPTION	CABLE	NUMBER, COLOR
+Q1-X40	1	1	V-	+Q2-X99	5	V- (DEVICE NET)		Black
+Q1-X40	2	2	V+	+Q2-X99	6	V+ (DEVICE NET)		Red
+Q1-X40	4	3	CAN_H	+Q2-X99	7	CAN L (DEVICE NET)		Blue
+Q1-X40	3	4	CAN_L	+Q2-X99	8	CAN H (DEVICE NET)		White
+Q1-X40	5	5	DRAIN	+Q2-X99	9	SHIELD (DEVICE NET)		Drain

Fosber

FOSBER S.p.A.
via Provinciale per Camaiore, 27/28 55060 Monsagrati (Lucca) - ITALIA
T. +39.0583.3891 - F. +39.0583.389205/385567
E-mail: info@fosber.it

TWIN 400 T.1
MORSETTIERA +Q1-X56
TABLERO DE BORNES +Q1-X56

customer	CORRUGADORA GUATEMA	REL	L.CENTI	28/06/17	issued	28/06/2017
job nr.	4607	REV			proj. sect.	=TW4+Q1
serial nr.	COM17279	DEF			page	92 of 114

TERMINAL BOX, CONNECTOR

+Q1-X60

INSIDE CABINET COMPONENT	TERMINAL	NUMB.OF TERMINAL	NUMBER OF WIRE	OUTSIDE CABINET COMPONENT	TERMINAL	DESCRIPTION	CABLE	NUMBER, COLOR
+Q1-A35.1	IN7	1	35.17	+Q1-A38.1	PIN 1	READING PHOTOCELL LEFT EXTERNAL EDGE	+Q1-W33	Wh
+Q1-A35.1	IN6	2	35.16	+Q1-A38.1	PIN 2	READING PHOTOCELL LEFT INTERNAL EDGE	+Q1-W33	Gn
+Q1-A35.1	IN4	3	35.14	+Q1-A38.1	PIN 3	READING PHOTOCELL RIGHT INTERNAL EDGE	+Q1-W33	Yw
+Q1-A35.1	IN5	4	35.15	+Q1-A38.1	PIN 4	READING PHOTOCELL RIGHT EXTERNAL EDGE	+Q1-W33	Gy
+Q1-A35.1	IN12	5	35.22	+Q1-A38.1	PIN 5	MAXIMUM OPENING (EDGE GUIDE)	+Q1-W33	Pk
+Q1-A35.1	IN13	6	35.23	+Q1-A38.1	PIN 6	MAXIMUM CLOSURE (EDGE GUIDE)	+Q1-W33	Rd
		7						
		8		+Q1-A38.1	PIN 8	AVAILABLE	+Q1-W33	Vt
+Q0-K4.2	A2	9	X0.0A	+Q1-A38.1	0 Vdc	0 Vdc	+Q1-W33	Bu
+Q0-K4.2	A2	10	X0.1A	+Q1-A38.1	+24 Vdc	0 Vdc	+Q1-W33	Bn
+Q1-GS4.2	PE	11	PE1	+Q1-A38.1	PE	GROUND CONNECTION	+Q1-W33	Yw/ Gn

customer	CORRUGADORA GUATEMA	REL	L.CENTI	28/06/17
job nr.	4607	REV	
serial nr.	COM17279	DEF	

issued 28/06/2017
proj. sect. =TW4+Q1
page 93 of 114

TWIN 400 T.1
MORSETTIERA +Q1-X60
TABLERO DE BORNES +Q1-X60

Fosber
FOSBER S.p.A.
via Provinciale per Camaiore, 27/28 55060 Monsagrati (Lucca) - ITALIA
T. +39.0583.3891 - F. +39.0583.389205/385567
E-mail: info@fosber.it

TERMINAL BOX, CONNECTOR

+Q1-X61

INSIDE CABINET COMPONENT	TERMINAL	NUMB.OF TERMINAL	NUMBER OF WIRE	OUTSIDE CABINET COMPONENT	TERMINAL	DESCRIPTION	CABLE	NUMBER, COLOR
+Q1-A36.1	OUT0	1	36.25	+Q1-A39.1	PIN 1	AXIS 1 INFLATION BLADES	+Q1-W30	Wh
+Q1-A36.1	OUT2	2	36.22	+Q1-A39.1	PIN 2	ROLL 1 INFLATION SCORERS	+Q1-W30	Gn
+Q1-A36.1	OUT1	3	36.11	+Q1-A39.1	PIN 3	AXIS 2 INFLATION BLADES	+Q1-W30	Yw
+Q1-A36.1	OUT3	4	36.10	+Q1-A39.1	PIN 4	ROLL 2 INFLATION SCORERS	+Q1-W30	Gy
+Q1-A36.1	OUT11	5	36.26	+Q1-A39.1	PIN 5	INTERNAL FLAP	+Q1-W30	Pk
+Q1-A36.1	OUT4	6	36.14	+Q1-A39.1	PIN 6	GONFIAGGIO RULLO AUSILIARIO CORDONI	+Q1-W30	Rd
+Q1-A36.1	OUT14	7	36.13	+Q1-A39.1	PIN 7	CARICAMENTO TEFLON ASSE 1	+Q1-W30	Bk
+Q1-A36.1	OUT15	8	36.12	+Q1-A39.1	PIN 8	CARICAMENTO TEFLON ASSE 2	+Q1-W30	Vt
+Q0-K4.2	A2	9	X0.0A	+Q1-A39.1	0 Vdc	AUXILIARY POWER SUPPLY 0 Vdc GENERAL	+Q1-W30	Bu
+Q0-M4.1	4	10	X0.1A	+Q1-A39.1	+24 Vdc	AUXILIARY POWER SUPPLY +24 Vdc GENERAL	+Q1-W30	Bn
+Q1-GS4.2	PE	11	PE1	+Q1-A39.1	PE	PROTECTION CONDUCTORS	+Q1-W30	Yw/ Gn

customer	CORRUGADORA GUATEMA	REL	L.CENTI	28/06/17	issued	28/06/2017
job nr.	4607	REV			proj. sect.	=TW4+Q1
serial nr.	COM17279	DEF			page	94 of 114

TWIN 400 T.1
MORSETTIERA +Q1-X61
TABLERO DE BORNES +Q1-X61

Fosber
FOSBER S.p.A.
via Provinciale per Camaiore, 27/28 55060 Monsagrati (Lucca) - ITALIA
T. +39.0583.3891 - F. +39.0583.389205/385567
E-mail: info@fosber.it

TERMINAL BOX, CONNECTOR

+Q1-X62

INSIDE CABINET COMPONENT	TERMINAL	NUMB.OF TERMINAL	NUMBER OF WIRE	OUTSIDE CABINET COMPONENT	TERMINAL	DESCRIPTION	CABLE	NUMBER, COLOR
+Q1-A36.1	OUT12	1	36.23	+Q1-A40.1	PIN 1	INTERNAL FLAP HIGH PRESSURE	+Q1-W31	Wh
+Q1-A36.1	OUT8	2						
+Q1-A36.1	OUT9	3						
+Q1-K12.4	11	4						
+Q1-A35.1	IN0	5	35.10	+Q1-A40.1	PIN 5	JAM UP AX 1	+Q1-W31	Pk
+Q1-A35.1	IN1	6	35.11	+Q1-A40.1	PIN 6	JAM UP AX 1	+Q1-W31	Rd
+Q1-A5.2	IN 10	7						
+Q1-A5.2	IN 11	8						
+Q0-K4.2	A2	9	X0.0A	+Q1-A40.1	0 Vdc	AUXILIARY POWER SUPPLY 0 Vdc GENERAL	+Q1-W31	Bu
+Q0-M4.1	4	10	X0.1A	+Q1-A40.1	+24 Vdc	AUXILIARY POWER SUPPLY +24 Vdc GENERAL	+Q1-W31	Bn
+Q1-GS4.2	PE	11	PE1	+Q1-A40.1	PE	PROTECTION CONDUCTORS	+Q1-W31	Yw/ Gn

REL	L.CENTI	28/06/17	issued 28/06/2017
REV			proj. sect. =TW4+Q1
DEF			page 95 of 114

customer: CORRUGADORA GUATEMA
job nr.: 4607
serial nr.: COM17279

TWIN 400 T.1
MORSETTIERA +Q1-X62
TABLERO DE BORNES +Q1-X62

Fosber
FOSBER S.p.A.
via Provinciale per Camaiore, 27/28 55060 Monsagrati (Lucca) - ITALIA
T. +39.0583.3891 - F. +39.0583.389205/385567
E-mail: info@fosber.it

TERMINAL BOX, CONNECTOR

+Q1-X70

INSIDE CABINET COMPONENT	TERMINAL	NUMB.OF TERMINAL	NUMBER OF WIRE	OUTSIDE CABINET COMPONENT	TERMINAL	DESCRIPTION	CABLE	NUMBER, COLOR
+Q1-A45.1	2	1	45.10	+Q1-SQ45.1	1	SLITTER 1 NO WORK AXIS 1	+Q1-W81	Black
+Q1-Q4.3	2	2	X0.1A	+Q1-SQ45.1	2	+24 Vdc	+Q1-W81	brown
+Q1-A45.1	3	3	45.11	+Q1-SQ45.2	1	SLITTER 2 NO WORK AXIS 1	+Q1-W82	Black
+Q1-Q4.3	2	4	X0.1A	+Q1-SQ45.2	2	+24 Vdc	+Q1-W82	brown
+Q1-A45.1	4	5	45.12	+Q1-SQ45.3	1	SLITTER 3 NO WORK AXIS 1	+Q1-W83	Black
+Q1-Q4.3	2	6	X0.1A	+Q1-SQ45.3	2	+24 Vdc	+Q1-W83	brown
+Q1-A45.1	5	7	45.13	+Q1-SQ45.4	1	SLITTER 4 NO WORK AXIS 1	+Q1-W84	Black
+Q1-Q4.3	2	8	X0.1A	+Q1-SQ45.4	2	+24 Vdc	+Q1-W84	brown
+Q1-A45.1	6	9	45.14	+Q1-SQ45.5	1	SLITTER 5 NO WORK AXIS 1	+Q1-W85	Black
+Q1-Q4.3	2	10	X0.1A	+Q1-SQ45.5	2	+24 Vdc	+Q1-W85	brown
+Q1-A45.1	7	11	45.15	+Q1-SQ45.6	1	SLITTER 6 NO WORK AXIS 1	+Q1-W86	Black
+Q1-Q4.3	2	12	X0.1A	+Q1-SQ45.6	2	+24 Vdc	+Q1-W86	brown
+Q1-A45.1	8	13	45.16	+Q1-SQ45.7	1	SLITTER 7 NO WORK AXIS 1	+Q1-W87	Black
+Q1-Q4.3	2	14	X0.1A	+Q1-SQ45.7	2	+24 Vdc	+Q1-W87	brown
+Q1-A45.1	9	15	45.17	+Q1-SQ45.8	1	SLITTER 8 NO WORK AXIS 1	+Q1-W88	Black
+Q1-Q4.3	2	16	X0.1A	+Q1-SQ45.8	2	+24 Vdc	+Q1-W88	brown
+Q1-A45.1	10	17	45.18	+Q1-SQ45.9	1	SLITTER 1 NO WORK AXIS 2	+Q1-W91	Black
+Q1-Q4.3	2	18	X0.1A	+Q1-SQ45.9	2	+24 Vdc	+Q1-W91	brown
+Q1-A45.1	11	19	45.19	+Q1-SQ45.10	1	SLITTER 2 NO WORK AXIS 2	+Q1-W92	Black
+Q1-Q4.3	2	20	X0.1A	+Q1-SQ45.10	2	+24 Vdc	+Q1-W92	brown
+Q1-A45.1	12	21	45.20	+Q1-SQ45.11	1	SLITTER 3 NO WORK AXIS 2	+Q1-W93	Black
+Q1-Q4.3	2	22	X0.1A	+Q1-SQ45.11	2	+24 Vdc	+Q1-W93	brown
+Q1-A45.1	13	23	45.21	+Q1-SQ45.12	1	SLITTER 4 NO WORK AXIS 2	+Q1-W94	Black
+Q1-Q4.3	2	24	X0.1A	+Q1-SQ45.12	2	+24 Vdc	+Q1-W94	brown
+Q1-A45.1	14	25	45.22	+Q1-SQ45.13	1	SLITTER 5 NO WORK AXIS 2	+Q1-W95	Black
+Q1-Q4.3	2	26	X0.1A	+Q1-SQ45.13	2	+24 Vdc	+Q1-W95	brown

REL	L.CENTI	28/06/17	issued 28/06/2017
REV			proj. sect. =TW4+Q1
DEF			page 96 of 114

customer: CORRUGADORA GUATEMA
job nr.: 4607
serial nr.: COM17279

TWIN 400 T.1
MORSETTIERA +Q1-X70
TABLERO DE BORNES +Q1-X70

Fosber
FOSBER S.p.A.
via Provinciale per Camaiore, 27/28 55060 Monsagrati (Lucca) - ITALIA
T. +39.0583.3891 - F. +39.0583.389205/385567
E-mail: info@fosber.it

TERMINAL BOX, CONNECTOR

+Q1-X70

INSIDE CABINET COMPONENT	TERMINAL	NUMB.OF TERMINAL	NUMBER OF WIRE	OUTSIDE CABINET COMPONENT	TERMINAL	DESCRIPTION	CABLE	NUMBER, COLOR
+Q1-A45.1	15	27	45.23	+Q1-SQ45.14	1	SLITTER 6 NO WORK AXIS 2	+Q1-W96	Black
+Q1-Q4.3	2	28	X0.1A	+Q1-SQ45.14	2	+24 Vdc	+Q1-W96	brown
+Q1-A45.1	16	29	45.24	+Q1-SQ45.15	1	SLITTER 7 NO WORK AXIS 2	+Q1-W97	Black
+Q1-Q4.3	2	30	X0.1A	+Q1-SQ45.15	2	+24 Vdc	+Q1-W97	brown
+Q1-A45.1	17	31	45.25	+Q1-SQ45.16	1	SLITTER 8 NO WORK AXIS 2	+Q1-W98	Black
+Q1-Q4.3	2	32	X0.1A	+Q1-SQ45.16	2	+24 Vdc	+Q1-W98	brown

customer	CORRUGADORA GUATEMA	REL	L.CENTI	28/06/17	issued	28/06/2017
job nr.	4607	REV			proj. sect.	=TW4+Q1
serial nr.	COM17279	DEF			page	97 of 114

TWIN 400 T.1
MORSETTIERA +Q1-X70
TABLERO DE BORNES +Q1-X70

Fosber
FOSBER S.p.A.
via Provinciale per Camaiore, 27/28 55060 Monsagrati (Lucca) - ITALIA
T. +39.0583.3891 - F. +39.0583.389205/385567
E-mail: info@fosber.it

TERMINAL BOX, CONNECTOR

+Q1-X71

INSIDE CABINET COMPONENT
TERMINAL
NUMB.OF TERMINAL
NUMBER OF WIRE
OUTSIDE CABINET COMPONENT
TERMINAL
DESCRIPTION
CABLE
NUMBER, COLOR

Fosber

FOSBER S.p.A.
via Provinciale per Camaiore, 27/28 55060 Monsagrati (Lucca) - ITALIA
T. +39.0583.3891 - F. +39.0583.389205/385567
E-mail: info@fosber.it

TWIN 400 T.1
MORSETTIERA +Q1-X71
TABLERO DE BORNES +Q1-X71

customer	CORRUGADORA GUATEMA	REL	L.CENTI	28/06/17	issued	28/06/2017
job nr.	4607	REV			proj. sect.	=TW4+Q1
serial nr.	COM17279	DEF			page	98 of 114

TERMINAL BOX, CONNECTOR

+Q1-X72

INSIDE CABINET COMPONENT	TERMINAL	NUMB.OF TERMINAL	NUMBER OF WIRE	OUTSIDE CABINET COMPONENT	TERMINAL	DESCRIPTION	CABLE	NUMBER, COLOR
+Q1-K46.1	12	1	48.10	+Q1-Y49.1	1	SLITTER 1 NO WORK AXIS 1	+Q1-W81	white
+Q1-GS4.1	- V	2	X0.0A	+Q1-Y49.1	2	0 Vdc	+Q1-W81	blue
+Q1-K46.1	14	3	48.11	+Q1-Y49.2	1	SLITTER 1 WORKING - AXIS 1	+Q1-W81	gray
+Q1-K46.2	12	4	48.12	+Q1-Y49.3	1	SLITTER 2 NO WORK AXIS 1	+Q1-W82	white
+Q1-GS4.1	- V	5	X0.0A	+Q1-Y49.3	2	0 Vdc	+Q1-W82	blue
+Q1-K46.2	14	6	48.13	+Q1-Y49.4	1	SLITTER 2 WORKING - AXIS 1	+Q1-W82	gray
+Q1-K46.3	12	7	48.14	+Q1-Y49.5	1	SLITTER 3 NO WORK AXIS 1	+Q1-W83	white
+Q1-GS4.1	- V	8	X0.0A	+Q1-Y49.5	2	0 Vdc	+Q1-W83	blue
+Q1-K46.3	14	9	48.15	+Q1-Y49.6	1	SLITTER 3 WORKING - AXIS 1	+Q1-W83	gray
+Q1-K46.4	12	10	48.16	+Q1-Y49.7	1	SLITTER 4 NO WORK AXIS 1	+Q1-W84	white
+Q1-GS4.1	- V	11	X0.0A	+Q1-Y49.7	2	0 Vdc	+Q1-W84	blue
+Q1-K46.4	14	12	48.17	+Q1-Y49.8	1	SLITTER 4 WORKING - AXIS 1	+Q1-W84	gray
+Q1-K46.5	12	13	48.18	+Q1-Y49.9	1	SLITTER 5 NO WORK AXIS 1	+Q1-W85	white
+Q1-GS4.1	- V	14	X0.0A	+Q1-Y49.9	2	0 Vdc	+Q1-W85	blue
+Q1-K46.5	14	15	48.19	+Q1-Y49.10	1	SLITTER 5 WORKING - AXIS 1	+Q1-W85	gray
+Q1-K46.6	12	16	48.20	+Q1-Y49.11	1	SLITTER 6 NO WORK AXIS 1	+Q1-W86	white
+Q1-GS4.1	- V	17	X0.0A	+Q1-Y49.11	2	0 Vdc	+Q1-W86	blue
+Q1-K46.6	14	18	48.21	+Q1-Y49.12	1	SLITTER 6 WORKING - AXIS 1	+Q1-W86	gray
+Q1-K46.7	12	19	48.22	+Q1-Y49.13	1	SLITTER 7 NO WORK AXIS 1	+Q1-W87	white
+Q1-GS4.1	- V	20	X0.0A	+Q1-Y49.13	2	0 Vdc	+Q1-W87	blue
+Q1-K46.7	14	21	48.23	+Q1-Y49.14	1	SLITTER 7 WORKING - AXIS 1	+Q1-W87	gray
+Q1-K46.8	12	22	48.24	+Q1-Y49.15	1	SLITTER 8 NO WORK AXIS 1	+Q1-W88	white
+Q1-GS4.1	- V	23	X0.0A	+Q1-Y49.15	2	0 Vdc	+Q1-W88	blue
+Q1-K46.8	14	24	48.25	+Q1-Y49.16	1	SLITTER 8 WORKING - AXIS 1	+Q1-W88	gray

REL	L.CENTI	28/06/17	issued 28/06/2017
REV			proj. sect. =TW4+Q1
DEF			page 99 of 114

customer: CORRUGADORA GUATEMA
job nr.: 4607
serial nr.: COM17279

TWIN 400 T.1
MORSETTIERA +Q1-X72
TABLERO DE BORNES +Q1-X72

Fosber
FOSBER S.p.A.
via Provinciale per Camaiore, 27/28 55060 Monsagrati (Lucca) - ITALIA
T. +39.0583.3891 - F. +39.0583.389205/385567
E-mail: info@fosber.it

TERMINAL BOX, CONNECTOR

+Q1-X73

INSIDE CABINET COMPONENT
TERMINAL
NUMB.OF TERMINAL
NUMBER OF WIRE
OUTSIDE CABINET COMPONENT
TERMINAL
DESCRIPTION
CABLE
NUMBER, COLOR

Fosber

FOSBER S.p.A.
via Provinciale per Camaiore, 27/28 55060 Monsagrati (Lucca) - ITALIA
T. +39.0583.3891 - F. +39.0583.389205/385567
E-mail: info@fosber.it

TWIN 400 T.1
MORSETTIERA +Q1-X73
TABLERO DE BORNES +Q1-X73

customer	CORRUGADORA GUATEMA	REL	L.CENTI	28/06/17	issued	28/06/2017
job nr.	4607	REV			proj. sect.	=TW4+Q1
serial nr.	COM17279	DEF			page	100 of 114

TERMINAL BOX, CONNECTOR

+Q1-X74

INSIDE CABINET COMPONENT	TERMINAL	NUMB.OF TERMINAL	NUMBER OF WIRE	OUTSIDE CABINET COMPONENT	TERMINAL	DESCRIPTION	CABLE	NUMBER, COLOR
+Q1-K46.9	12	1	48.28	+Q1-Y50.1	1	SLITTER 1 NO WORK AXIS 2	+Q1-W91	white
+Q1-GS4.1	- V	2	X0.0A	+Q1-Y50.1	2	0 Vdc	+Q1-W91	blue
+Q1-K46.9	14	3	48.29	+Q1-Y50.2	1	SLITTER 1 WORKING - AXIS 2	+Q1-W91	gray
+Q1-K46.10	12	4	48.30	+Q1-Y50.3	1	SLITTER 2 NO WORK AXIS 2	+Q1-W92	white
+Q1-GS4.1	- V	5	X0.0A	+Q1-Y50.3	2	0 Vdc	+Q1-W92	blue
+Q1-K46.10	14	6	48.31	+Q1-Y50.4	1	SLITTER 2 WORKING - AXIS 2	+Q1-W92	gray
+Q1-K46.11	12	7	48.32	+Q1-Y50.5	1	SLITTER 3 NO WORK AXIS 2	+Q1-W93	white
+Q1-GS4.1	- V	8	X0.0A	+Q1-Y50.5	2	0 Vdc	+Q1-W93	blue
+Q1-K46.11	14	9	48.33	+Q1-Y50.6	1	SLITTER 3 WORKING - AXIS 2	+Q1-W93	gray
+Q1-K46.12	12	10	48.34	+Q1-Y50.7	1	SLITTER 4 NO WORK AXIS 2	+Q1-W94	white
+Q1-GS4.1	- V	11	X0.0A	+Q1-Y50.7	2	0 Vdc	+Q1-W94	blue
+Q1-K46.12	14	12	48.35	+Q1-Y50.8	1	SLITTER 4 WORKING - AXIS 2	+Q1-W94	gray
+Q1-K46.13	12	13	48.36	+Q1-Y50.9	1	SLITTER 5 NO WORK AXIS 2	+Q1-W95	white
+Q1-GS4.1	- V	14	X0.0A	+Q1-Y50.9	2	0 Vdc	+Q1-W95	blue
+Q1-K46.13	14	15	48.37	+Q1-Y50.10	1	SLITTER 5 WORKING - AXIS 2	+Q1-W95	gray
+Q1-K46.14	12	16	48.38	+Q1-Y50.11	1	SLITTER 6 NO WORK AXIS 2	+Q1-W96	white
+Q1-GS4.1	- V	17	X0.0A	+Q1-Y50.11	2	0 Vdc	+Q1-W96	blue
+Q1-K46.14	14	18	48.39	+Q1-Y50.12	1	SLITTER 6 WORKING - AXIS 2	+Q1-W96	gray
+Q1-K46.15	12	19	48.40	+Q1-Y50.13	1	SLITTER 7 NO WORK AXIS 2	+Q1-W97	white
+Q1-GS4.1	- V	20	X0.0A	+Q1-Y50.13	2	0 Vdc	+Q1-W97	blue
+Q1-K46.15	14	21	48.41	+Q1-Y50.14	1	SLITTER 7 WORKING - AXIS 2	+Q1-W97	gray
+Q1-K46.16	12	22	48.42	+Q1-Y50.15	1	SLITTER 8 NO WORK AXIS 2	+Q1-W98	white
+Q1-GS4.1	- V	23	X0.0A	+Q1-Y50.15	2	0 Vdc	+Q1-W98	blue
+Q1-K46.16	14	24	48.43	+Q1-Y50.16	1	SLITTER 8 WORKING - AXIS 2	+Q1-W98	gray

REL	L.CENTI	28/06/17	issued 28/06/2017
REV			proj. sect. =TW4+Q1
DEF			page 101 of 114

customer: CORRUGADORA GUATEMA
job nr.: 4607
serial nr.: COM17279

TWIN 400 T.1
MORSETTIERA +Q1-X74
TABLERO DE BORNES +Q1-X74

FOSBER S.p.A.
via Provinciale per Camaiore, 27/28 55060 Monsagrati (Lucca) - ITALIA
T. +39.0583.3891 - F. +39.0583.389205/385567
E-mail: info@fosber.it

TERMINAL BOX, CONNECTOR

+Q1-X75

INSIDE CABINET COMPONENT
TERMINAL
NUMB.OF TERMINAL
NUMBER OF WIRE
OUTSIDE CABINET COMPONENT
TERMINAL
DESCRIPTION
CABLE
NUMBER, COLOR

Fosber

FOSBER S.p.A.
via Provinciale per Camaiore, 27/28 55060 Monsagrati (Lucca) - ITALIA
T. +39.0583.3891 - F. +39.0583.389205/385567
E-mail: info@fosber.it

TWIN 400 T.1
MORSETTIERA +Q1-X75
TABLERO DE BORNES +Q1-X75

customer	CORRUGADORA GUATEMA	REL	L.CENTI	28/06/17	issued	28/06/2017
job nr.	4607	REV			proj. sect.	=TW4+Q1
serial nr.	COM17279	DEF			page	102 of 114

TERMINAL BOX, CONNECTOR

+Q1-X76

INSIDE CABINET COMPONENT	TERMINAL	NUMB.OF TERMINAL	NUMBER OF WIRE	OUTSIDE CABINET COMPONENT	TERMINAL	DESCRIPTION	CABLE	NUMBER, COLOR
+Q1-A37.1	OUT0	1	37.10	+Q1-Y37.1	1 +	LUBRIFICAZIONE COLTELLO 1 ASSE 1	+Q1-W100 +Q1-W101	1
+Q1-A37.1	OUT1	2	37.11	+Q1-Y37.2	1 +	LUBRIFICAZIONE COLTELLO 2 ASSE 1	+Q1-W100 +Q1-W102	2
+Q1-A37.1	OUT2	3	37.12	+Q1-Y37.3	1 +	LUBRIFICAZIONE COLTELLO 3 ASSE 1	+Q1-W100 +Q1-W103	3
+Q1-A37.1	OUT3	4	37.13	+Q1-Y37.4	1 +	LUBRIFICAZIONE COLTELLO 4 ASSE 1	+Q1-W100 +Q1-W104	4
+Q1-A37.1	OUT4	5	37.14	+Q1-Y37.5	1 +	LUBRIFICAZIONE COLTELLO 5 ASSE 1	+Q1-W100 +Q1-W105	5
+Q1-A37.1	OUT5	6	37.15	+Q1-Y37.6	1 +	LUBRIFICAZIONE COLTELLO 6 ASSE 1	+Q1-W100 +Q1-W106	6
+Q1-A37.1	OUT6	7	37.16	+Q1-Y37.7	1 +	LUBRIFICAZIONE COLTELLO 7 ASSE 1	+Q1-W100 +Q1-W107	7
+Q1-A37.1	OUT7	8	37.17	+Q1-Y37.8	1 +	LUBRIFICAZIONE COLTELLO 8 ASSE 1	+Q1-W100 +Q1-W108	8
+Q1-A37.1	OUT8	9	37.18	+Q1-Y37.9	1 +	LUBRIFICAZIONE COLTELLO 1 ASSE 2	+Q1-W100 +Q1-W109	9
+Q1-A37.1	OUT9	10	37.19	+Q1-Y37.10	1 +	LUBRIFICAZIONE COLTELLO 2 ASSE 2	+Q1-W100 +Q1-W110	10
+Q1-A37.1	OUT10	11	37.20	+Q1-Y37.11	1 +	LUBRIFICAZIONE COLTELLO 3 ASSE 2	+Q1-W100 +Q1-W111	11
+Q1-A37.1	OUT11	12	37.21	+Q1-Y37.12	1 +	LUBRIFICAZIONE COLTELLO 4 ASSE 2	+Q1-W100 +Q1-W112	12
+Q1-A37.1	OUT12	13	37.22	+Q1-Y37.13	1 +	LUBRIFICAZIONE COLTELLO 5 ASSE 2	+Q1-W100 +Q1-W113	13
+Q1-A37.1	OUT13	14	37.23	+Q1-Y37.14	1 +	LUBRIFICAZIONE COLTELLO 6 ASSE 2	+Q1-W100 +Q1-W114	14
+Q1-A37.1	OUT14	15	37.24	+Q1-Y37.15	1 +	LUBRIFICAZIONE COLTELLO 7 ASSE 2	+Q1-W100 +Q1-W115	15
+Q1-A37.1	OUT15	16	37.25	+Q1-Y37.16	1 +	LUBRIFICAZIONE COLTELLO 8 ASSE 2	+Q1-W100 +Q1-W116	16
+Q1-A36.1	GND0/1	17	X0.0A	+Q1-Y37.1	2 -	COMUNE PER ELETTROVALVOLE	+Q1-W100	17

customer	CORRUGADORA GUATEMA	REL	L.CENTI	28/06/17	issued	28/06/2017
job nr.	4607	REV			proj. sect.	=TW4+Q1
serial nr.	COM17279	DEF			page	103 of 114

TWIN 400 T.1
MORSETTIERA +Q1-X76
REGLETTA TERMINALES (BORNERA) +Q1-X76

FOSBER S.p.A.
via Provinciale per Camaiore, 27/28 55060 Monsagrati (Lucca) - ITALIA
T. +39.0583.3891 - F. +39.0583.389205/385567
E-mail: info@fosber.it

TERMINAL BOX, CONNECTOR

+Q1-X202

INSIDE CABINET COMPONENT	TERMINAL	NUMB.OF TERMINAL	NUMBER OF WIRE	OUTSIDE CABINET COMPONENT	TERMINAL	DESCRIPTION	CABLE	NUMBER, COLOR
+Q1-A28.1	-	1	X0.0DP	=SYC+C0-X202	1	RECEIPT 24Vdc FOR DSP400 SUPPLY	=SYC+C0+B22-W02	1
+Q1-A28.1	+	2	X0.1DP	=SYC+C0-X202	2	RECEIPT 24Vdc FOR DSP400 SUPPLY	=SYC+C0+B22-W02	2
		5	X0.0D	=SYC+C0-X202	5	RECEPTION 24 Vdc FOR DSP 400 I/O COMMON	=SYC+C0+B22-W04	1
		6	X0.1D	=SYC+C0-X202	6	RECEPTION 24 Vdc FOR DSP 400 I/O COMMON	=SYC+C0+B22-W04	2

FOSBER S.p.A.
via Provinciale per Camaiore, 27/28 55060 Monsagrati (Lucca) - ITALIA
T. +39.0583.3891 - F. +39.0583.389205/385567
E-mail: info@fosber.it

TWIN 400 T.1
MORSETTIERA +Q1-X202
TABLERO DE BORNES +Q1-X202

customer	CORRUGADORA GUATEMA	REL	L.CENTI	28/06/17	issued	28/06/2017
job nr.	4607	REV			proj. sect.	=TW4+Q1
serial nr.	COM17279	DEF			page	104 of 114

TERMINAL BOX, CONNECTOR

+Q1-XIF1

INSIDE CABINET COMPONENT	TERMINAL	NUMB.OF TERMINAL	NUMBER OF WIRE	OUTSIDE CABINET COMPONENT	TERMINAL	DESCRIPTION	CABLE	NUMBER, COLOR
+Q1-K12.1	S22	1	12.20			E-STOP CHANNEL A FROM EXTERNAL	=CEC+Q0=TW4+Q1-W01 =SC4+Q0=TW4+Q0-W900	1
+Q1-X18	2	2	15.33B			E-STOP CHANNEL A FROM EXTERNAL	=CEC+Q0=TW4+Q1-W01 =SC4+Q0=TW4+Q0-W900	2
+Q1-K12.1	S32	3	12.19			E-STOP CHANNEL B FROM EXTERNAL	=CEC+Q0=TW4+Q1-W01 =SC4+Q0=TW4+Q0-W900	3
+Q1-X18	4	4	15.34A			E-STOP CHANNEL B FROM EXTERNAL	=CEC+Q0=TW4+Q1-W01 =SC4+Q0=TW4+Q0-W900	4
+Q1-X16	12	5	24.13			E-STOP CHANNEL A FOR EXTERNAL	=CEC+Q0=TW4+Q1-W01 =SC4+Q0=TW4+Q0-W900	5
+Q1-X18	7	6	24.10			E-STOP CHANNEL A FOR EXTERNAL	=CEC+Q0=TW4+Q1-W01 =SC4+Q0=TW4+Q0-W900	6
+Q1-X16	14	7	24.17			E-STOP CHANNEL B FOR EXTERNAL	=CEC+Q1=TW4+Q1-W01 =SC4+Q0=TW4+Q0-W900	7
+Q1-X18	9	8	24.14			E-STOP CHANNEL B FOR EXTERNAL	=CEC+Q0=TW4+Q1-W01 =SC4+Q0=TW4+Q0-W900	8
+Q1-X16	16	9	24.20			E-STOP TO SUPERVISOR		
+Q1-X18	11	10	24.18	+Q1-A28.1	42	E-STOP TO SUPERVISOR		
		11						
		12						
		13						
		14						
		15						
		16	PE1				=CEC+Q0=TW4+Q1-W01 =SC4+Q0=TW4+Q0-W900	

REL	L.CENTI	28/06/17	issued 28/06/2017
REV			proj. sect. =TW4+Q1
DEF			page 105 of 114

customer: CORRUGADORA GUATEMA
job nr.: 4607
serial nr.: COM17279

TWIN 400 T.1
MORSETTIERA +Q1-XIF1
TABLERO DE BORNES +Q1-XIF1

Fosber
FOSBER S.p.A.
via Provinciale per Camaiore, 27/28 55060 Monsagrati (Lucca) - ITALIA
T. +39.0583.3891 - F. +39.0583.389205/385567
E-mail: info@fosber.it

TERMINAL BOX, CONNECTOR

+Q1-XIF2

INSIDE CABINET COMPONENT	TERMINAL	NUMB.OF TERMINAL	NUMBER OF WIRE	OUTSIDE CABINET COMPONENT	TERMINAL	DESCRIPTION	CABLE	NUMBER, COLOR
+Q0-X47	2	1	Yellow			RIFERIMENTO DI VELOCITA IN FREQUENZA CANALE A	+Q0+Q1-W07A	25.11
+Q0-X47	1	2	Green			RIFERIMENTO DI VELOCITA IN FREQUENZA CANALE A NEGATO	+Q0+Q1-W07A =SYC+C0=TW4+Q1-W01	25.10 White
+Q0-X47	4	3	Gray			RIFERIMENTO DI VELOCITA IN FREQUENZA CANALE B	+Q0+Q1-W07A	25.13
+Q0-X47	3	4	Pink			RIFERIMENTO DI VELOCITA IN FREQUENZA CANALE B NEGATO	+Q0+Q1-W07A	25.12
+Q0-X47	8	5	Brown			RIFERIMENTO DI VELOCITA IN FREQUENZA 5 VDC	+Q0+Q1-W07A =SYC+C0=TW4+Q1-W01	25.15 Red
+Q0-X47	7	6	White			RIFERIMENTO DI VELOCITA IN FREQUENZA 0 V	+Q0+Q1-W07A	25.14
+Q0-X47	9	7	Sch			RIFERIMENTO DI VELOCITA IN FREQUENZA SCH	+Q0+Q1-W07 =SYC+C0=TW4+Q1-W01	Sch Sch

REL	L.CENTI	28/06/17	issued 28/06/2017
REV			proj. sect. =TW4+Q1
DEF			page 106 of 114

customer: CORRUGADORA GUATEMA
job nr.: 4607
serial nr.: COM17279

TWIN 400 T.1
MORSETTIERA +Q1-XIF2
TABLERO DE BORNES +Q1-XIF2

Fosber
FOSBER S.p.A.
via Provinciale per Camaiore, 27/28 55060 Monsagrati (Lucca) - ITALIA
T. +39.0583.3891 - F. +39.0583.389205/385567
E-mail: info@fosber.it

TERMINAL BOX, CONNECTOR

+Q1-XIF3

INSIDE CABINET COMPONENT	TERMINAL	NUMB.OF TERMINAL	NUMBER OF WIRE	OUTSIDE CABINET COMPONENT	TERMINAL	DESCRIPTION	CABLE	NUMBER, COLOR
+Q1-A33.1	5	1	V(+)			V SPEED REFERENCE FOR E+L	+Q1+E+L-W1	1
+Q1-A33.1	6	2	V(-)			V SPEED REFERENCE FOR E+L	+Q1+E+L-W1	2
+Q1-XIF3	22	3	Sch			V SPEED REFERENCE FOR E+L	+Q1+E+L-W1	3
+Q1-K10.11	11	4	33.10			CUT COMPLETED FROM AUX CUT-OFF KNIFE	+Q1+E+L-W1	4
+Q1-K10.11	14	5	33.11			CUT COMPLETED FROM AUX CUT-OFF KNIFE	+Q1+E+L-W1	5
+Q1-K10.12	11	6	33.12			SHIFTING OF MACHINE ON LEFT	+Q1+E+L-W1	6
+Q1-K10.12	14	7	33.13			SHIFTING OF MACHINE ON LEFT	+Q1+E+L-W1	7
+Q1-K10.13	11	8	33.14			SHIFTING OF MACHINE ON RIGHT	+Q1+E+L-W1	8
+Q1-K10.13	14	9	33.15			SHIFTING OF MACHINE ON RIGHT	+Q1+E+L-W1	9
+Q1-K10.15	11	10	33.18			ORDER CHANGE RUNNING	+Q1+E+L-W1	10
+Q1-K10.15	14	11	33.19			ORDER CHANGE RUNNING	+Q1+E+L-W1	11
+Q1-K10.16	11	12	33.20			LINE RUN	+Q1+E+L-W1	12
+Q1-K10.16	14	13	33.21			LINE RUN	+Q1+E+L-W1	13
+Q1-K12.10	34	14	33.23			E-STOP FOR EXTERNAL	+Q1+E+L-W1	14
+Q1-K12.10	33	15	33.22			E-STOP FOR EXTERNAL	+Q1+E+L-W1	15
+Q1-K12.11	34	16	33.25			E-STOP FOR EXTERNAL	+Q1+E+L-W1	16
+Q1-K12.11	33	17	33.24			E-STOP FOR EXTERNAL	+Q1+E+L-W1	17
+Q1-A33.2	5	18	V(+)			0 - 10 VDC SPEED REFERENCE	+Q1+E+L-W2	Rd
+Q1-A33.2	6	19	V(-)			0 - 10 VDC SPEED REFERENCE	+Q1+E+L-W2	Wh
+Q1-XIF3	3	20	Sch			0 - 10 VDC SPEED REFERENCE	+Q1+E+L-W2	Shield
		21						
		22						
		23						
		24						
		25						

REL	L.CENTI	28/06/17	issued 28/06/2017
REV			proj. sect. =TW4+Q1
DEF			page 107 of 114

customer: CORRUGADORA GUATEMA
job nr.: 4607
serial nr.: COM17279

TWIN 400 T.1
MORSETTIERA +Q1-XIF3
TABLERO DE BORNES +Q1-XIF3

Fosber
FOSBER S.p.A.
via Provinciale per Camaiore, 27/28 55060 Monsagrati (Lucca) - ITALIA
T. +39.0583.3891 - F. +39.0583.389205/385567
E-mail: info@fosber.it

TERMINAL BOX, CONNECTOR

+Q1-XIF4

INSIDE CABINET COMPONENT	TERMINAL	NUMB.OF TERMINAL	NUMBER OF WIRE	OUTSIDE CABINET COMPONENT	TERMINAL	DESCRIPTION	CABLE	NUMBER, COLOR
+Q0-M4.1	4	1	7.16			CUT COMPLETED ROTARY SHEAR		
+Q0-M4.1	4	2	X0.1A		4	CUT COMPLETED ROTARY SHEAR		
+Q1-A28.1	+	3	30.10			SPEED REFERENCE (V+)		
+Q1-A28.1	-	4	26.10			SPEED REFERENCE (V-)		
+Q1-K11.1	A1	5	11.10	K CAMBIO ORDINE		START ORDER CHANGE FROM AOC		
+Q1-A5.3	IN 1	6	7.11	+Q1-A28.1	-	PREPARATION FOR ORDER CHANGE		
+Q1-A5.3	IN 3	7	7.13	K CAMBIO ORDINE		GAP/NO GAP ORDER CHANGE		
+Q1-A5.3	IN 5	8	7.15	K CAMBIO ORDINE		ORDER CHANGE RESET		
+Q1-A5.3	IN 0	9	7.10	K CAMBIO ORDINE		LINE RUN		
+Q1-A5.3	IN 4	10	7.14	+Q1-B26.10	BK4	BOARD PRESENCE PHOTOCELL		
+Q0-M4.1	4	11	X0.1A	K CAMBIO ORDINE	B	24 VDC FOR INPUTS		
+Q0-K4.2	A2	12	X0.0A	+Q1-B26.10	BN1	0 VDC FOR INPUTS		
+Q1-K10.1	11	13	27.10	+Q0-M4.1	4	MACHINE IN EMERGENCY		
+Q1-K10.1	14	14	27.11	+Q1-A28.1	+	MACHINE IN EMERGENCY		
+Q1-K10.2	11	15	27.12	+Q0-M4.1	4	N-STOP		
+Q1-K10.2	14	16	27.13	+Q1-A28.1	+	N-STOP		
+Q1-K10.3	11	17	27.14	+Q0-M4.1	4	INCREASE SPEED		
+Q1-K10.3	14	18	27.15	+Q1-A28.1	+	INCREASE SPEED		
+Q1-K10.4	11	19	27.16	+Q0-M4.1	4	DECREASE SPEED		
+Q1-K10.4	14	20	27.17	+Q1-A28.1	+	DECREASE SPEED		
+Q1-K10.5	11	21	27.18	+Q0-M4.1	4	MACHINE READY FOR RUN		
+Q1-K10.5	14	22	27.19	+Q1-A28.1	+	MACHINE READY FOR RUN		
+Q1-K10.6	11	23	27.20	+Q0-M4.1	4	MACHINE READY TO ORDER CHANGE		
+Q1-K10.6	14	24	27.21	+Q1-A28.1	+	MACHINE READY TO ORDER CHANGE		
+Q1-K10.7	11	25	27.22	+Q0-M4.1	4	ORDER CHANGE RUNNING		
+Q1-K10.7	14	26	27.23	+Q1-A28.1	+	ORDER CHANGE RUNNING		

REL	L.CENTI	28/06/17	issued 28/06/2017
REV			proj. sect. =TW4+Q1
DEF			page 108 of 114

customer: CORRUGADORA GUATEMA
job nr.: 4607
serial nr.: COM17279

TWIN 400 T.1
MORSETTIERA +Q1-XIF4
TABLERO DE BORNES +Q1-XIF4

Fosber
FOSBER S.p.A.
via Provinciale per Camaiore, 27/28 55060 Monsagrati (Lucca) - ITALIA
T. +39.0583.3891 - F. +39.0583.389205/385567
E-mail: info@fosber.it

TERMINAL BOX, CONNECTOR

+Q1-XIF4

INSIDE CABINET COMPONENT	TERMINAL	NUMB.OF TERMINAL	NUMBER OF WIRE	OUTSIDE CABINET COMPONENT	TERMINAL	DESCRIPTION	CABLE	NUMBER, COLOR
+Q1-K10.8	11	27	27.24	+Q0-M4.1	4	MACHINE READY FOR GAP ORDER CHANGE		
+Q1-K10.8	14	28	27.25	+Q1-A28.1	+	MACHINE READY FOR GAP ORDER CHANGE		
+Q1-K10.9	11	29	27.26	+Q0-M4.1	4	MACHINE READY FOR NO GAP ORDER CHANGE		
+Q1-K10.9	14	30	27.27	+Q1-A28.1	+	MACHINE READY FOR NO GAP ORDER CHANGE		
+Q1-K10.10	11	31	27.28	+Q0-M4.1	4	NEXT ORDER TANDEM		
+Q1-K10.10	14	32	27.29	+Q1-A28.1	+	NEXT ORDER TANDEM		

FOSBER S.p.A.
via Provinciale per Camaiore, 27/28 55060 Monsagrati (Lucca) - ITALIA
T. +39.0583.3891 - F. +39.0583.389205/385567
E-mail: info@fosber.it

TWIN 400 T.1
MORSETTIERA +Q1-XIF4
TABLERO DE BORNES +Q1-XIF4

customer	CORRUGADORA GUATEMA	REL	L.CENTI	28/06/17	issued	28/06/2017
job nr.	4607	REV			proj. sect.	=TW4+Q1
serial nr.	COM17279	DEF			page	109 of 114

TERMINAL BOX, CONNECTOR

+Q1-XIF5

INSIDE CABINET COMPONENT
TERMINAL
NUMB.OF TERMINAL
NUMBER OF WIRE
OUTSIDE CABINET COMPONENT
TERMINAL
DESCRIPTION
CABLE
NUMBER, COLOR

Fosber

FOSBER S.p.A.
via Provinciale per Camaiore, 27/28 55060 Monsagrati (Lucca) - ITALIA
T. +39.0583.3891 - F. +39.0583.389205/385567
E-mail: info@fosber.it

TWIN 400 T.1
MORSETTIERA +Q1-XIF5
TABLERO DE BORNES +Q1-XIF5

customer	CORRUGADORA GUATEMA	REL	L.CENTI	28/06/17	issued	28/06/2017
job nr.	4607	REV			proj. sect.	=TW4+Q1
serial nr.	COM17279	DEF			page	110 of 114

TERMINAL BOX, CONNECTOR

+Q1-XIF6

INSIDE CABINET COMPONENT	TERMINAL	NUMB.OF TERMINAL	NUMBER OF WIRE	OUTSIDE CABINET COMPONENT	TERMINAL	DESCRIPTION	CABLE	NUMBER, COLOR
+Q1-K12.10	44	1	53.10			EMERGENCY FOR EXTERNAL CHANNEL A		1
+Q1-K12.10	43	2	53.11			EMERGENCY FOR EXTERNAL CHANNEL A		2
+Q1-K12.11	44	3	53.12			EMERGENCY FOR EXTERNAL CHANNEL B		3
+Q1-K12.11	43	4	53.13			EMERGENCY FOR EXTERNAL CHANNEL B		4
+Q1-K9.6	21	5	53.14			AVVIO/INSERZIONE MACCHINA PER ESTERNO		5
+Q1-K9.6	24	6	53.15			AVVIO/INSERZIONE MACCHINA PER ESTERNO		6
	3	7	53.16			TRIM FAN IN FAULT		7
	4	8	X0.1A	+Q1-A52.6	7	TRIM FAN IN FAULT		8
	3	9	53.17			ABILITAZIONE ALLA MARCIA TRIM FAN		9
	4	10	X0.1A	+Q1-A52.6	7	ABILITAZIONE ALLA MARCIA TRIM FAN		10
	3	11	53.18			TRIM FAN A REGIME		11
	4	12	X0.1A	+Q1-A52.6	7	TRIM FAN A REGIME		12

REL	L.CENTI	28/06/17	issued 28/06/2017
REV			proj. sect. =TW4+Q1
DEF			page 111 of 114

customer: CORRUGADORA GUATEMA
job nr.: 4607
serial nr.: COM17279

TWIN 400 T.1
MORSETTIERA +Q1-XIF6
TABLERO DE BORNES +Q1-XIF6

Fosber
FOSBER S.p.A.
via Provinciale per Camaiore, 27/28 55060 Monsagrati (Lucca) - ITALIA
T. +39.0583.3891 - F. +39.0583.389205/385567
E-mail: info@fosber.it

TERMINAL BOX, CONNECTOR

+Q1-XI

INSIDE CABINET COMPONENT	TERMINAL	NUMB.OF TERMINAL	NUMBER OF WIRE	OUTSIDE CABINET COMPONENT	TERMINAL	DESCRIPTION	CABLE	NUMBER, COLOR
+Q0-K4.2	A2	1	X0.0A			0 VDC ALIMENTAZIONE SCATOLA +B3	+Q1+B3-W01	1
+Q0-M4.1	4	2	X0.1A			24 VDC ALIMENTAZIONE SCATOLA +B3	+Q1+B3-W01	2
		3				24 VDC SOLENOID VALVE BLADES	+Q1+B3-W01	3
		4				GND	+Q1+B3-W01	GR/YE
		5	11.12			SEGNALE DI CAMBIO ORDINE A ROBOT COLTELLI		
		6	11.13			SEGNALE DI CAMBIO ORDINE A ROBOT COLTELLI		
		7	11.14			ALIMENTAZIONE RICEVITORE FOTOCELLULE REGOLAZIONE UTENSILI		

customer	CORRUGADORA GUATEMA	REL	L.CENTI	28/06/17
job nr.	4607	REV	
serial nr.	COM17279	DEF	

TWIN 400 T.1
MORSETTIERA +Q1-XI
TABLERO DE BORNES +Q1-XI

issued	28/06/2017
proj. sect.	=TW4+Q1
page	112 of 114

Fosber
FOSBER S.p.A.
via Provinciale per Camaiore, 27/28 55060 Monsagrati (Lucca) - ITALIA
T. +39.0583.3891 - F. +39.0583.389205/385567
E-mail: info@fosber.it

1	SEZIONE SCHEMA ELETTRICO	39	MORSETTIERA PASSIVA -XL1	77	MORSETTIERA +Q1-X20
2	PAGINA LASCIATA VUOTA	40	MORSETTIERA PASSIVA -XL2	78	MORSETTIERA +Q1-X21
3	INGRESSO ALIMENTAZIONE DA Q0	41	PAGINA INTENZIONALMENTE VUOTA	79	MORSETTIERA +Q1-X22
4	ALIMENTAZIONE AUSILIARI	42	PAGINA INTENZIONALMENTE VUOTA	80	MORSETTIERA +Q1-X23
5	CONFIGURAZIONE PLC	43	CONFIGURAZIONE PLC	81	MORSETTIERA +Q1-X24
6	INPUT DIAGNOSTICA QUADRO	44	GATEWAY CAN OPEN	82	MORSETTIERA +Q1-X25
7	INPUT INTERFACCIA CON AOC	45	SENSORI COLTELLI ASSE 1/2	83	MORSETTIERA +Q1-X29
8	PAGINA VUOTA	46	COMANDO COLTELLI ASSE 1/2	84	MORSETTIERA +Q1-X31
9	OUTPUT QUADRO ELETTRICO	47	COMANDO 9 COLTELLO ASSE 1/2	85	MORSETTIERA +Q1-X36
10	OUTPUT INTERFACCIA CON AOC	48	COMANDO ELETTROVALVOLE COLTELLI	86	MORSETTIERA +Q1-X40
11	GESTIONE SEGNALE DI CAMBIO ORDINE	49	ELETTROVALVOLE COLTELLI ASSE 1	87	MORSETTIERA +Q1-X47
12	GESTIONE ARRESTO DI EMERGENZA	50	ELETTROVALVOLE COLTELLI ASSE 2	88	MORSETTIERA +Q1-X50
13	SERIE CIRCUITO RIPRISTINO	51	PAGINA INTENZIONALMENTE VUOTA	89	MORSETTIERA +Q1-X51
14	FINECORSA DI SICUREZZA	52	INTERFACCIA ASPIRAZIONE POLVERI	90	MORSETTIERA +Q1-X52
15	SERIE CIRCUITO EMERGENZA	53	INTERFACCIA ASPIRATORE RIFILI	91	MORSETTIERA +Q1-X55
16	ALIMENTAZIONE DA +Q0	54	PAGINA INTENZIONALMENTE VUOTA	92	MORSETTIERA +Q1-X56
17	INTERFACCIA CON +Q0 1/2	55	LAY - OUT PIASTRA CENTRALE	93	MORSETTIERA +Q1-X60
18	INTERFACCIA CON +Q0 2/2	56	LAY - OUT PIASTRA DESTRA	94	MORSETTIERA +Q1-X61
19	ALIMENTAZIONE AUSILIARI	57	LAY - OUT PIASTRA SINISTRA	95	MORSETTIERA +Q1-X62
20	DEVICE NET NETWORK	58	PAGINA INTENZIONALMENTE VUOTA	96	MORSETTIERA +Q1-X70
21	DEVICE NET NETWORK	59	PAGINA INTENZIONALMENTE VUOTA	97	MORSETTIERA +Q1-X70
22	SWITCH ETHERNET	60	CABLAGGIO FOTOCELLULE E MICRO	98	MORSETTIERA +Q1-X71
23	INTERFACCIA CAN OPEN/ETH MODEM	61	CABLAGGIO FINECORSA	99	MORSETTIERA +Q1-X72
24	INTERFACCIA EMERGENZA-AUSILIARI	62	COLLEGAMENTO TIPO C	100	MORSETTIERA +Q1-X73
25	RIFERIMENTO RUOTA DI MISURA	63	COLLEGAMENTO TIPO C	101	MORSETTIERA +Q1-X74
26	INTERFACCIA HD INPUT	64	COMPLESSIVO CAVI BORDO MACCHINA	102	MORSETTIERA +Q1-X75
27	INTERFACCIA HD OUTPUT	65	COMPLESSIVO CAVI BORDO MACCHINA	103	MORSETTIERA +Q1-X76
28	INTERFACCIA CON SYNCRO	66	COMPLESSIVO CAVI DI CONNESSIONE	104	MORSETTIERA +Q1-X202
29	INTERFACCIA CON SYNCRO IN	67	COMPLESSIVO CAVI DI CONNESSIONE	105	MORSETTIERA +Q1-XIF1
30	INTERFACCIA CON SYNCRO OUT	68	MORSETTIERA +Q1-X1	106	MORSETTIERA +Q1-XIF2
31	INTERFACCIA CON AOC IN	69	MORSETTIERA +Q1-X2	107	MORSETTIERA +Q1-XIF3
32	INTERFACCIA CON AOC OUT	70	MORSETTIERA +Q1-X3	108	MORSETTIERA +Q1-XIF4
33	INTERFACCIA E+L	71	MORSETTIERA +Q1-X4	109	MORSETTIERA +Q1-XIF4
34	DEVICE NET NETWORK	72	MORSETTIERA +Q1-X9	110	MORSETTIERA +Q1-XIF5
35	I/O BORDO MACCHINA	73	MORSETTIERA +Q1-X14	111	MORSETTIERA +Q1-XIF6
36	I/O BORDO MACCHINA	74	MORSETTIERA +Q1-X15	112	MORSETTIERA +Q1-XI
37	COMANDO VALVOLE LUBRIFICAZIONE	75	MORSETTIERA +Q1-X16	113	INDICE SCHEMA ELETTRICO
38	CONNESSIONE EDGE GUIDE	76	MORSETTIERA +Q1-X18	114	INDICE SCHEMA ELETTRICO

Fosber

FOSBER S.p.A.
via Provinciale per Camaiore, 27/28 55060 Monsagrati (Lucca) - ITALIA
T. +39.0583.3891 - F. +39.0583.389205/385567
E-mail: info@fosber.it

TWIN 400 T.1

INDICE SCHEMA ELETTRICO
ÍNDICE ESQUEMA ELÉCTRICO

customer	**CORRUGADORA GUATEMA**	REL	**L.CENTI**	**28/06/17**	issued	**28/06/2017**
job nr.	**4607**	REV			proj. sect.	**=TW4+Q1**
serial nr.	**COM17279**	DEF			page	**113 of 114**

1	SECCIÓN ESQUEMA ELÉCTRICO	39	MORSETTIERA PASSIVA -XL1	77	TABLERO DE BORNES +Q1-X20
2	PAG. DEJADA EN BLANCO INTENCIO.	40	MORSETTIERA PASSIVA -XL2	78	TABLERO DE BORNES +Q1-X21
3	ENTRADA ALIMENTACIÓN DE Q0	41	PAG. DEJADA EN BLANCO INTENCIO.	79	TABLERO DE BORNES +Q1-X22
4	ALIMENTACIÓN AUXILIARES	42	PAG. DEJADA EN BLANCO INTENCIO.	80	TABLERO DE BORNES +Q1-X23
5	CONFIGURACIÓN PLC	43	CONFIGURACIÓN PLC	81	TABLERO DE BORNES +Q1-X24
6	INPUT DIAGNÓSTICO CUADRO	44	GATEWAY CAN OPEN	82	BORNERA +Q1-X25
7	INPUT INTERFAZ CON AOC	45	SENSORES CUCHILLOS EJE 1/2	83	TABLERO DE BORNES +Q1-X29
8	PAG. INTENCIONADAMENTE EN BLANCO	46	MANDO CUCHILLOS EJE 1/2	84	MORSETTIERA +Q1-X31
9	SALIDA CUADRO ELÉCTRICO	47	MANDO 9 CUCHILLO EJE 1/2	85	TABLERO DE BORNES +Q1-X36
10	SALIDA INTERFAZ CON AOC	48	MANDO ELECTROVÁLVULAS CUCHILLOS	86	BORNERA +Q1-X40
11	GESTIÓN SEÑAL DE CAMBIO PEDIDO	49	ELECTROVÁLVULAS CUCHILLOS EJE 1	87	BORNERA +Q1-X47
12	GESTIÓN PARO DE EMERGENCIA	50	ELECTROVÁLVULAS CUCHILLOS EJE 2	88	BORNERA +Q1-X50
13	SERIE CIRCUITO RESTABLECIMIENTO	51	PAG. DEJADA EN BLANCO INTENCIO.	89	TABLERO DE BORNES +Q1-X51
14	FINAL DE CARRERA DE SEGURIDAD	52	INTERFACCIA ASPIRAZIONE POLVERI	90	BORNERA +Q1-X52
15	SERIE CIRCUITO EMERGENCIA	53	INTERFACCIA ASPIRATORE RIFILI	91	TABLERO DE BORNES +Q1-X55
16	ALIMENTACIÓN DE +Q0	54	PAG. DEJADA EN BLANCO INTENCIO.	92	TABLERO DE BORNES +Q1-X56
17	INTERFAZ CON +Q0 1/2	55	LAY - OUT PLACA CENTRAL	93	MORSETTIERA +Q1-X60
18	INTERFAZ CON +Q0 2/2	56	LAY - OUT PLACA DERECHA	94	TABLERO DE BORNES +Q1-X61
19	ALIMENTACIÓN AUXILIARES	57	LAY - OUT PLACA IZQUIERDA	95	MORSETTIERA +Q1-X62
20	DEVICE NET NETWORK	58	PAG. DEJADA EN BLANCO INTENCIO.	96	TABLERO DE BORNES +Q1-X70
21	DEVICE NET NETWORK	59	PAG. DEJADA EN BLANCO INTENCIO.	97	TABLERO DE BORNES +Q1-X70
22	INTERRUPTOR ETHERNET	60	CABLEADO FOTOCÉLULAS Y MICRO	98	TABLERO DE BORNES +Q1-X71
23	INTERFAZ CAN OPEN/ETH MODEM	61	CABLEADO FIN DE TRAYECTORIA	99	TABLERO DE BORNES +Q1-X72
24	INTERFAZ EMERGENCIA-AUXILIARES	62	CONEXIÓN TIPO C	100	TABLERO DE BORNES +Q1-X73
25	REFERENCIA RUEDA DE MEDICIÓN	63	CONEXIÓN TIPO C	101	TABLERO DE BORNES +Q1-X74
26	INTERFAZ HD INPUT	64	CONJ. CABLES BORDO MÁQUINA	102	TABLERO DE BORNES +Q1-X75
27	INTERFAZ HD OUTPUT	65	CONJ. CABLES BORDO MÁQUINA	103	REGLETA TERMINALES (BORNERA) +Q1-X76
28	INTERFAZ CON SYNCRO	66	CONJUNTO CABLES DE CONEXIÓN	104	TABLERO DE BORNES +Q1-X202
29	INTERFAZ CON SYNCRO IN	67	CONJUNTO CABLES DE CONEXIÓN	105	TABLERO DE BORNES +Q1-XIF1
30	INTERFAZ CON SYNCRO OUT	68	BORNERA +Q1-X1	106	TABLERO DE BORNES +Q1-XIF2
31	INTERFAZ CON AOC IN	69	BORNERA +Q1-X2	107	TABLERO DE BORNES +Q1-XIF3
32	INTERFAZ CON AOC OUT	70	BORNERA +Q1-X3	108	TABLERO DE BORNES +Q1-XIF4
33	INTERFAZ E+L	71	TABLERO DE BORNES +Q1-X4	109	TABLERO DE BORNES +Q1-XIF4
34	DEVICE NET NETWORK	72	TABLERO DE BORNES +Q1-X9	110	MORSETTIERA +Q1-XIF5
35	I/O BORDE MÁQUINA	73	TABLERO DE BORNES +Q1-X14	111	MORSETTIERA +Q1-XIF6
36	I/O BORDE MÁQUINA	74	BORNERA +Q1-X15	112	MORSETTIERA +Q1-XI
37	MANDO VÁLVULAS LUBRICACIÓN	75	TABLERO DE BORNES +Q1-X16	113	ÍNDICE ESQUEMA ELÉCTRICO
38	CONEXIÓN EDGE GUIDE	76	TABLERO DE BORNES +Q1-X18	114	ÍNDICE ESQUEMA ELÉCTRICO

Fosber

FOSBER S.p.A.
via Provinciale per Camaiore, 27/28 55060 Monsagrati (Lucca) - ITALIA
T. +39.0583.3891 - F. +39.0583.389205/385567
E-mail: info@fosber.it

TWIN 400 T.1
INDICE SCHEMA ELETTRICO
ÍNDICE ESQUEMA ELÉCTRICO

customer	CORRUGADORA GUATEMA	REL	L.CENTI	28/06/17	issued	28/06/2017
job nr.	4607	REV			proj. sect.	=TW4+Q1
serial nr.	COM17279	DEF			page	114 of 114

TWIN 400 T.1

=TW4+C0

FOSBER S.p.A.
via Provinciale per Camaiore, 27/28 55060 Monsagrati (Lucca) - ITALIA
T. +39.0583.3891 - F. +39.0583.389205/385567
E-mail: info@fosber.it

TWIN 400 T.1
SEZIONE SCHEMA ELETTRICO
SECCIÓN ESQUEMA ELÉCTRICO

customer	**CORRUGADORA GUATEMA**	REL	**L.CENTI**	**28/06/17**	issued	**28/06/2017**
job nr.	**4607**	REV			proj. sect.	**=TW4+C0**
serial nr.	**COM17279**	DEF			page	**1 of 14**

FOSBER S.p.A.
via Provinciale per Camaiore, 27/28 55060 Monsagrati (Lucca) - ITALIA
T. +39.0583.3891 - F. +39.0583.389205/385567
E-mail: info@fosber.it

TWIN 400 T.1

PAGINA LASCIATA VUOTA
PÁGINA DEJADA EN BLANCO

customer	**CORRUGADORA GUATEMA**	REL	**L.CENTI**	**28/06/17**	issued	**28/06/2017**
job nr.	**4607**	REV			proj. sect.	**=TW4+C0**
serial nr.	**COM17279**	DEF			page	**2 of 14**

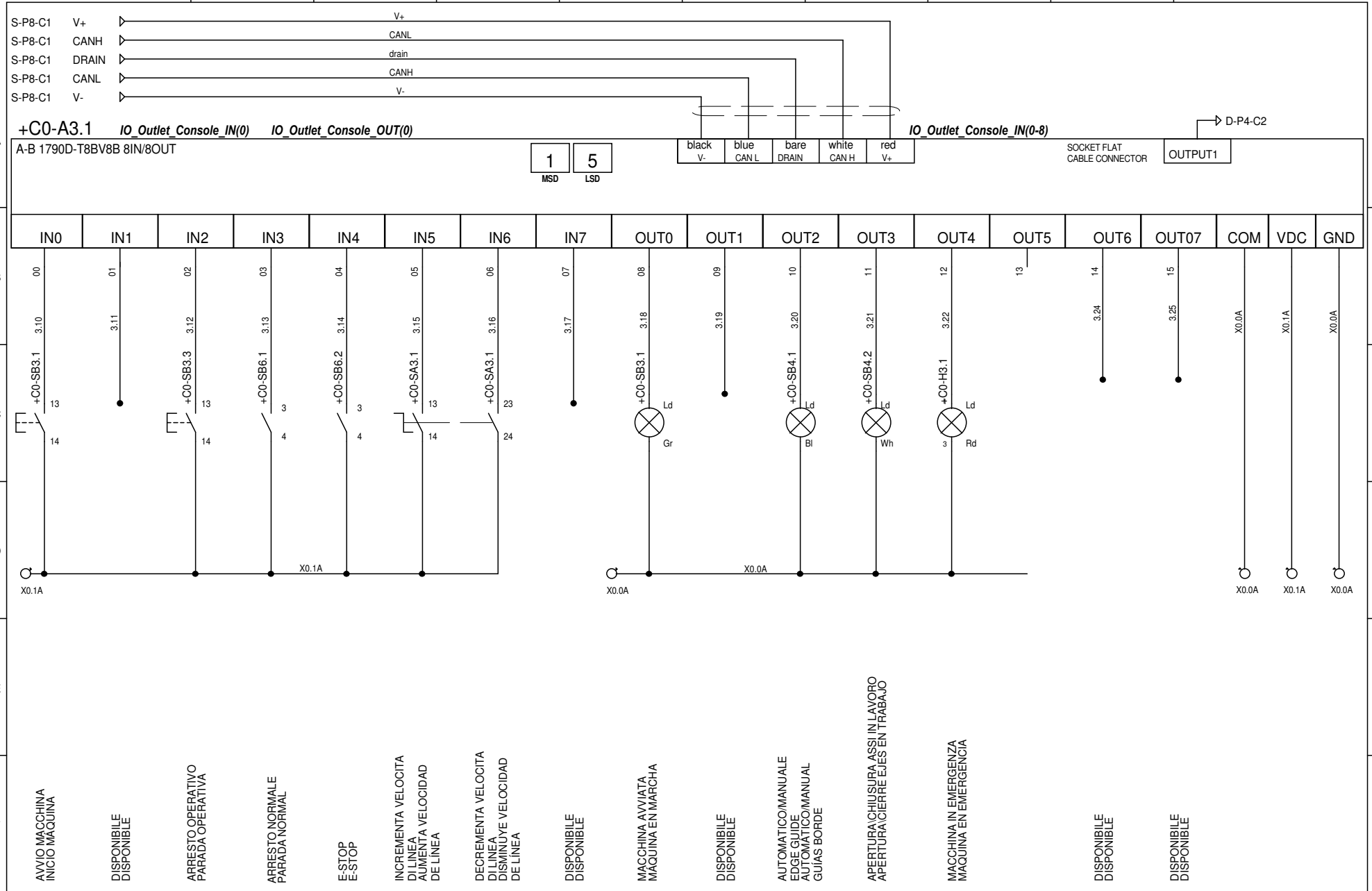

FOSBER S.p.A.
via Provinciale per Camaiore, 27/28 55060 Monsagrati (Lucca) - ITALIA
T. +39.0583.3891 - F. +39.0583.389205/385567
E-mail: info@fosber.it

TWIN 400 T.1
I/O COMANDI CONSOLE
I/O CONTROLES CONSOLA

customer	CORRUGADORA GUATEMA	REL	L.CENTI	28/06/17	issued	28/06/2017
job nr.	4607	REV			proj. sect.	=TW4+C0
serial nr.	COM17279	DEF			page	3 of 14

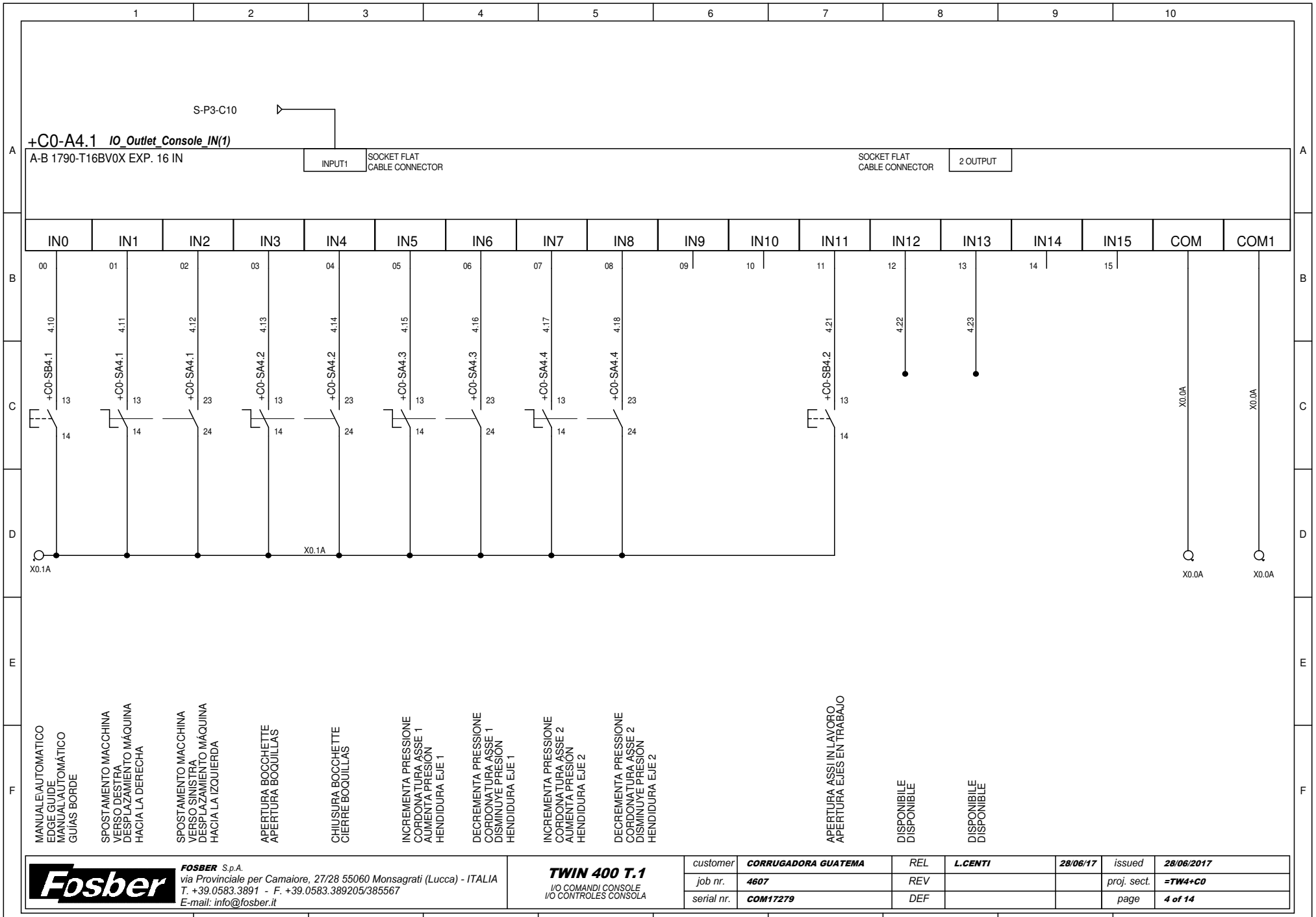

Fosber

FOSBER S.p.A.
via Provinciale per Camaiore, 27/28 55060 Monsagrati (Lucca) - ITALIA
T. +39.0583.3891 - F. +39.0583.389205/385567
E-mail: info@fosber.it

TWIN 400 T.1
I/O COMANDI CONSOLE
I/O CONTROLES CONSOLA

customer	CORRUGADORA GUATEMA	REL	L.CENTI	28/06/17	issued	28/06/2017
job nr.	4607	REV			proj. sect.	=TW4+C0
serial nr.	COM17279	DEF			page	4 of 14

FOSBER S.p.A.
via Provinciale per Camaiore, 27/28 55060 Monsagrati (Lucca) - ITALIA
T. +39.0583.3891 - F. +39.0583.389205/385567
E-mail: info@fosber.it

TWIN 400 T.1

PAGINA INTENZIONALMENTE VUOTA
PAGINA INTENCIONALMENTE VACÍA

customer	**CORRUGADORA GUATEMA**	REL	**L.CENTI**	**28/06/17**	issued	**28/06/2017**
job nr.	**4607**	REV			proj. sect.	**=TW4+C0**
serial nr.	**COM17279**	DEF			page	**5 of 14**

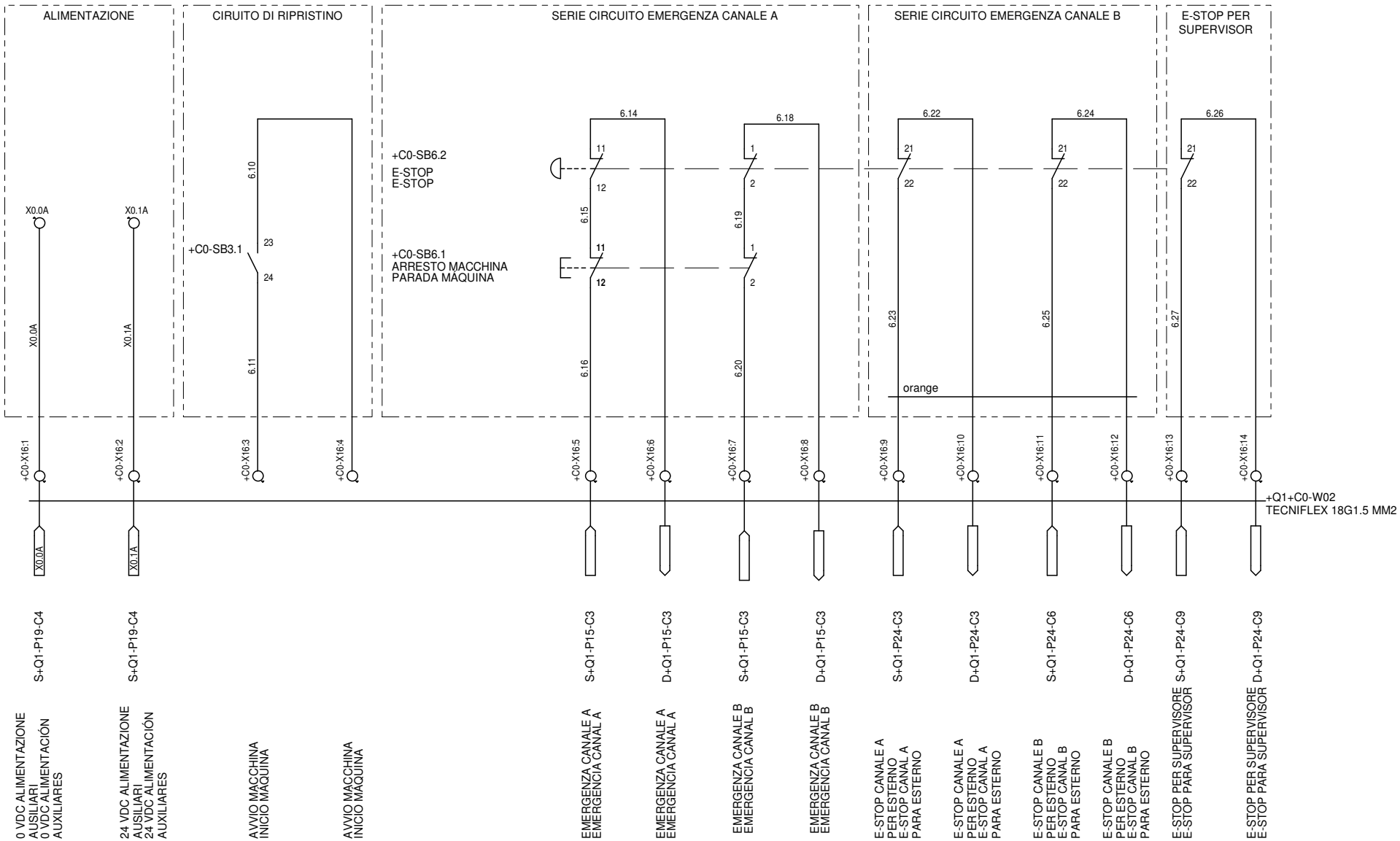

FOSBER S.p.A.
via Provinciale per Camaiore, 27/28 55060 Monsagrati (Lucca) - ITALIA
T. +39.0583.3891 - F. +39.0583.389205/385567
E-mail: info@fosber.it

TWIN 400 T.1
INTERFACCIA QUADRO ELETTRICO +Q1
INTERFAZ CUADRO ELÉCTRICO +Q1

customer	CORRUGADORA GUATEMA	REL	L.CENTI	28/06/17	issued	28/06/2017
job nr.	4607	REV			proj. sect.	=TW4+C0
serial nr.	COM17279	DEF			page	6 of 14

FOSBER S.p.A.
via Provinciale per Camaiore, 27/28 55060 Monsagrati (Lucca) - ITALIA
T. +39.0583.3891 - F. +39.0583.389205/385567
E-mail: info@fosber.it

TWIN 400 T.1

PAGINA VUOTA
PÁGINA VACÍA

customer	**CORRUGADORA GUATEMA**	REL	**L.CENTI**	**28/06/17**	issued	**28/06/2017**
job nr.	**4607**	REV			proj. sect.	**=TW4+C0**
serial nr.	**COM17279**	DEF			page	**7 of 14**

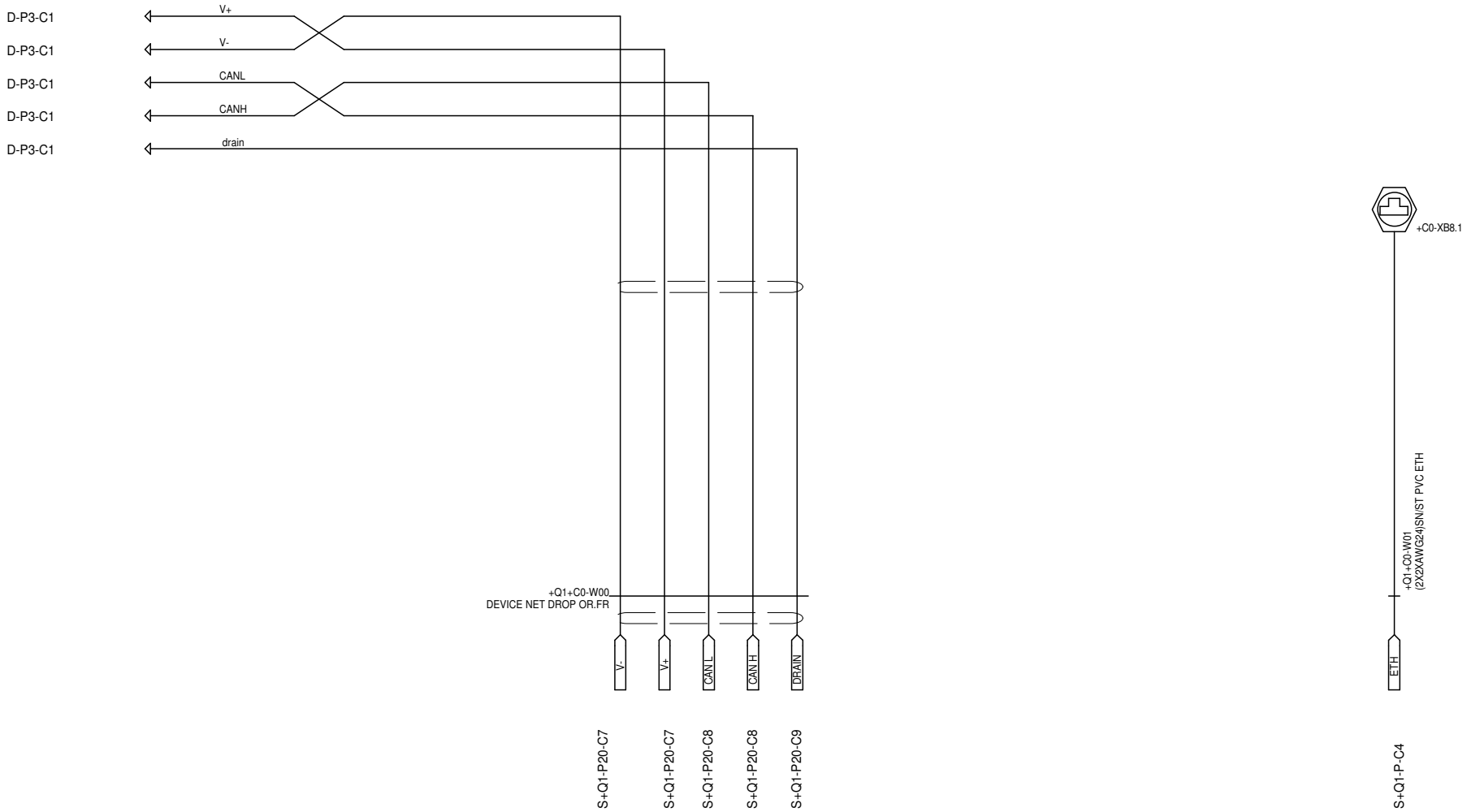

FOSBER S.p.A.
via Provinciale per Camaiore, 27/28 55060 Monsagrati (Lucca) - ITALIA
T. +39.0583.3891 - F. +39.0583.389205/385567
E-mail: info@fosber.it

TWIN 400 T.1
DEVICE-NET NET-WORK
DEVICE-NET NET-WORK

customer	**CORRUGADORA GUATEMA**	REL	**L.CENTI**	**28/06/17**	issued	**28/06/2017**
job nr.	**4607**	REV			proj. sect.	**=TW4+C0**
serial nr.	**COM17279**	DEF			page	**8 of 14**

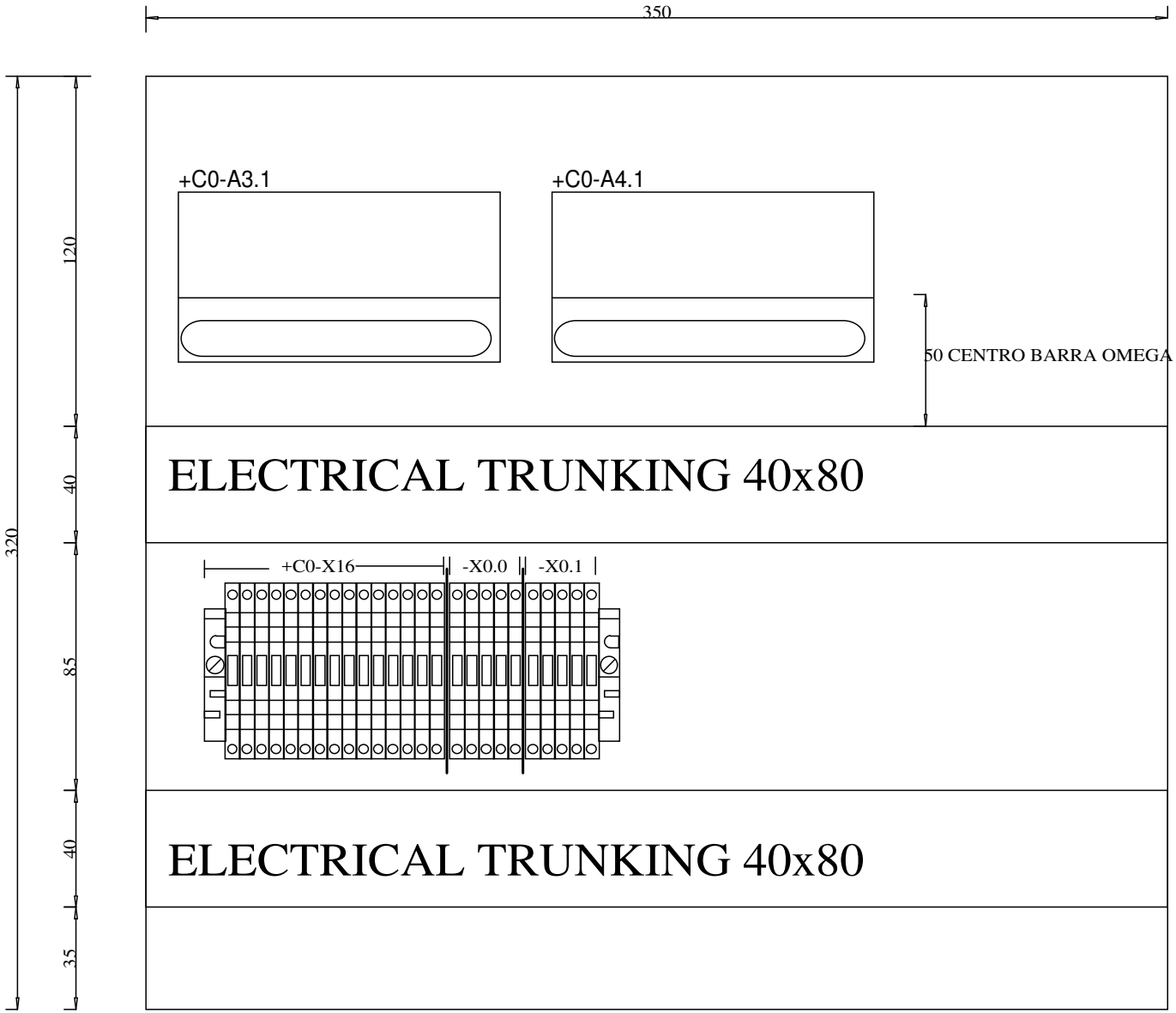

LATO OPERATORE DX
MONTARE CONSOLLE
SU QUADRO Q1
ED EFFETTUARE IL
CABLAGGIO COMPLETO

TERM. BOX	TYPE OF TERMINAL	QTY
+C0-X16	ZDU 2,5	14
+C0-X16	ZPE 2,5	1
-X0.0	ZDU 2,5	5
-X0.1	ZDU 2,5	5

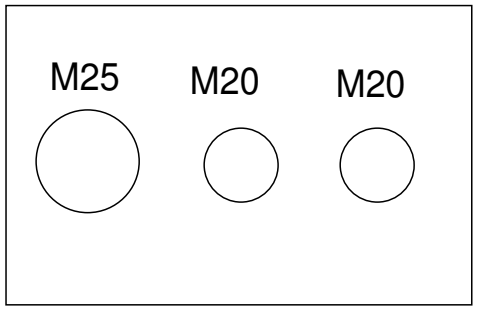

Fosber
FOSBER S.p.A.
via Provinciale per Camaiore, 27/28 55060 Monsagrati (Lucca) - ITALIA
T. +39.0583.3891 - F. +39.0583.389205/385567
E-mail: info@fosber.it

TWIN 400 T.1
LAY - OUT PIASTRA
LAY-OUT PLACA

customer	CORRUGADORA GUATEMA	REL	L.CENTI	28/06/17	issued	28/06/2017
job nr.	4607	REV			proj. sect.	=TW4+C0
serial nr.	COM17279	DEF			page	9 of 14

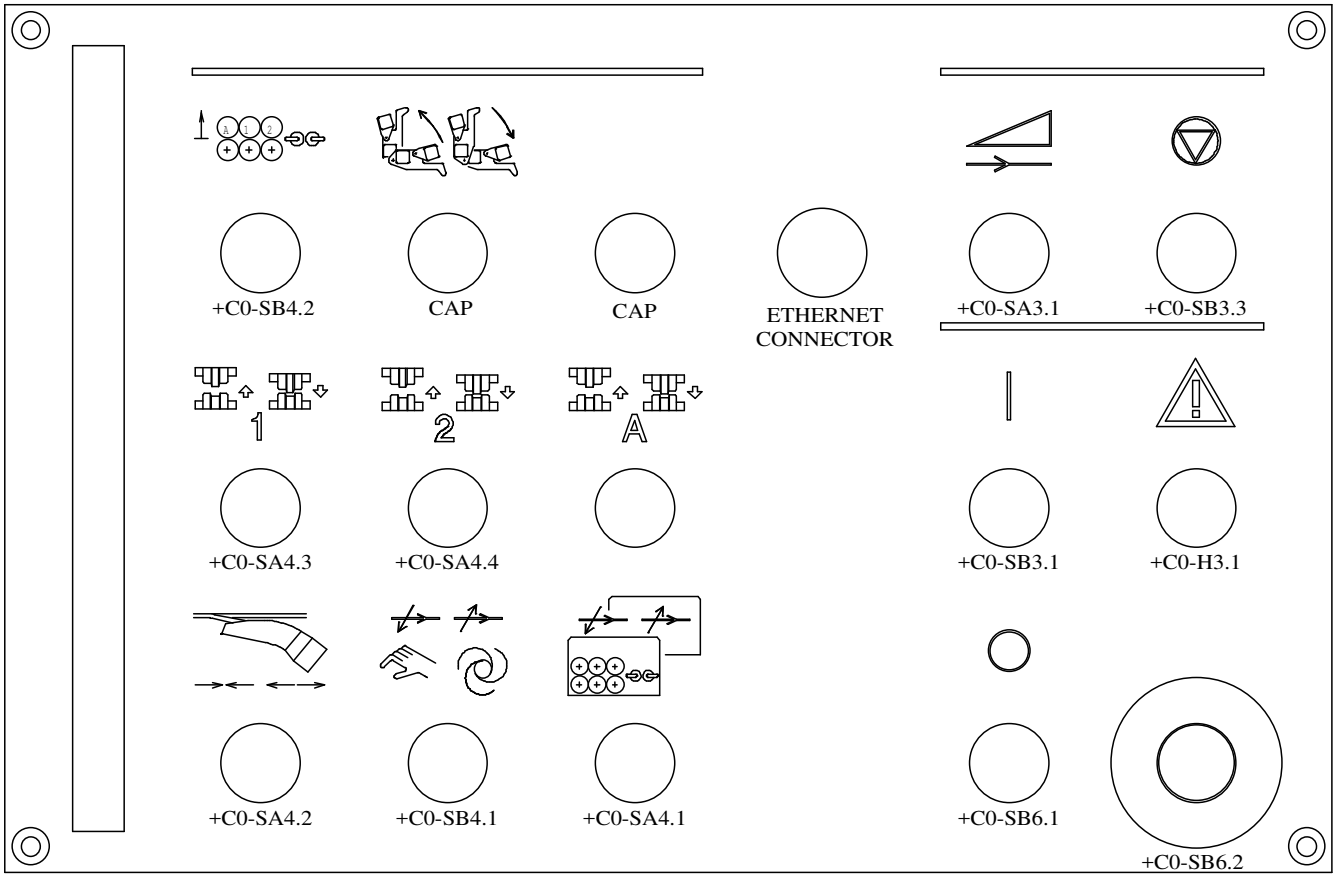

+C0-SB4.2	+C0-SB4.1	+C0-SA4.4		+C0-SA3.1	+C0-SB3.3	+C0-SB6.1	
[NO 4.21 - X0.1A] [3.21 - X0.0A] PULS.LUMINOSO BIANCO	[NO 4.10 - X0.1A] [3.20 - X0.0A] PULS. LUM. BLU	[NO 4.17 - X0.1A] [NO 4.18 - X0.1A] SEL. 3 POS. INSTAB. NERO		[NO 3.15 - X0.1A [NO 3.16 - X0.1A] SEL. 3 POS. INSTAB. NERO	[NO 3.12 - X0.1A] PULS. DI N - STOP	[NC 6.15 - 6.16] [NC 6.19 - 6.20] [NO 3.13 - X0.1A] PULS. RIALZATO ROSSO	
+C0-SA4.3	+C0-SA4.2	+C0-SA4.1		+C0-SB3.1	+C0-H3.1	+C0-SB6.2	
[NO 4.15 - X0.1A] [NO 4.16 - X0.1A] SEL. 3 POS. INSTAB. NERO	[NO 4.13 - X0.1A] [NO 4.14 - X0.1A] SEL. 3 POS. INSTAB. NERO	[NO 4.11 - X0.1A] [NO 4.12 - X0.1A] SEL. 3 POS. INSTAB. NERO		[NO 3.10 - X0.1A] [NO 6.10 - 6.11] [3.18 - X0.0A] PULS. LUM. VERDE	[3.22 - X0.0A] LAMPADA ROSSA	[NC 6.14 - 6.15] [NC 6.18 - 6.19] [NC 6.22 - 6.23] [NC 6.24 - 6.25] [NC 6.26-6.27)] [NO 3.14 - X0.1A] P. EMERGENZA A FUNGO	

Fosber
FOSBER S.p.A.
via Provinciale per Camaiore, 27/28 55060 Monsagrati (Lucca) - ITALIA
T. +39.0583.3891 - F. +39.0583.389205/385567
E-mail: info@fosber.it

TWIN 400 T.1
LAY - OUT CONSOLE
LAY - OUT CONSOLA

customer	CORRUGADORA GUATEMA	REL	L.CENTI	28/06/17	issued	28/06/2017
job nr.	4607	REV			proj. sect.	=TW4+C0
serial nr.	COM17279	DEF			page	10 of 14

MAIN CONNECTION CABLING CABINET =TW4 +Q1

Nr.	INITIALS	CODE	TYPE	Ø(mm)	LENGTH(mt)	DESCRIPTION	START	ARRIVAL	TERMINAL BOX	TYPE OF NET
						COMMUNICATION WITH +C0				
1	+Q1+C0-W00	51294885	DEVICE NET DROP OR.FR	7,2		DEVICE NET NETWORK	+Q1	+C0	+Q1-X40	DEVICE-NET NETWORK
2	+Q1+C0-W01	31052086	(2X2XAWG24)SN/ST PVC ETH	6		ETHERNET COMUNICATION INTERFACE	+Q1-A22.1	+C0	DIRECTLY	ETHERNET NETWORK
3	+Q1+C0-W02	31051243	TECNIFLEX 18G1.5 MM2	14,3		INTERFACE WITH +C0	+Q1	+C0	+Q1-X16	AUXILIARY SIGNAL

FOSBER S.p.A.
via Provinciale per Camaiore, 27/28 55060 Monsagrati (Lucca) - ITALIA
T. +39.0583.3891 - F. +39.0583.389205/385567
E-mail: info@fosber.it

TWIN 400 T.1
COMPLESSIVO CAVI DI CONNESSIONE
CONJUNTO CABLES DE CONEXIÓN

customer	CORRUGADORA GUATEMA	REL	L.CENTI	28/06/17	issued	28/06/2017
job nr.	4607	REV			proj. sect.	=TW4+C0
serial nr.	COM17279	DEF			page	11 of 14

TERMINAL BOX, CONNECTOR

+C0-X16

INSIDE CABINET COMPONENT	TERMINAL	NUMB.OF TERMINAL	NUMBER OF WIRE	OUTSIDE CABINET COMPONENT	TERMINAL	DESCRIPTION	CABLE	NUMBER, COLOR
+Q0-K4.2	A2	1	X0.0A	+Q1-X16	1	0 VDC POWER SUPPLY AUXILIARIES	+Q1+C0-W02	1
+Q0-M4.1	4	2	X0.1A	+Q1-X16	2	24 VDC POWER SUPPLY AUXILIARIES	+Q1+C0-W02	2
+C0-SB3.1	24	3	6.11			MACHINE START UP		3
+C0-SB3.1	23	4	6.10			MACHINE START UP		4
+C0-SB6.1	12	5	6.16	+Q1-X16	6	EMERGENCY - CHANNEL A	+Q1+C0-W02	5
+C0-SB6.2	11	6	6.14	+Q1-X16	5	EMERGENCY - CHANNEL A	+Q1+C0-W02	6
+C0-SB6.1	22	7	6.20	+Q1-X16	8	EMERGENCY - CHANNEL B	+Q1+C0-W02	7
+C0-SB6.2	1	8	6.18	+Q1-X16	7	EMERGENCY - CHANNEL B	+Q1+C0-W02	8
+C0-SB6.2	22	9	6.23	+Q1-X16	10	E-STOP CHANNEL A EXTERNAL	+Q1+C0-W02	9
+C0-SB6.2	21	10	6.22	+Q1-X16	9	E-STOP CHANNEL A EXTERNAL	+Q1+C0-W02	10
+C0-SB6.2	22	11	6.25	+Q1-X16	12	E-STOP CHANNEL B INTERNAL	+Q1+C0-W02	11
+C0-SB6.2	21	12	6.24	+Q1-X16	11	E-STOP CHANNEL B INTERNAL	+Q1+C0-W02	12
+C0-SB6.2	22	13	6.27	+Q1-X16	14	E-STOP TO SUPERVISOR	+Q1+C0-W02	13
+C0-SB6.2	21	14	6.26	+Q1-X16	13	E-STOP TO SUPERVISOR	+Q1+C0-W02	14
		15	PE0					

REL	L.CENTI	28/06/17	issued 28/06/2017
REV			proj. sect. =TW4+C0
DEF			page 12 of 14

customer: CORRUGADORA GUATEMA
job nr.: 4607
serial nr.: COM17279

TWIN 400 T.1
MORSETTIERA +C0-X16
TABLERO DE BORNES +C0-X16

Fosber
FOSBER S.p.A.
via Provinciale per Camaiore, 27/28 55060 Monsagrati (Lucca) - ITALIA
T. +39.0583.3891 - F. +39.0583.389205/385567
E-mail: info@fosber.it

1	SEZIONE SCHEMA ELETTRICO	8	DEVICE-NET NET-WORK
2	PAGINA LASCIATA VUOTA	9	LAY - OUT PIASTRA
3	I/O COMANDI CONSOLE	10	LAY - OUT CONSOLE
4	I/O COMANDI CONSOLE	11	COMPLESSIVO CAVI DI CONNESSIONE
5	PAGINA INTENZIONALMENTE VUOTA	12	MORSETTIERA +C0-X16
6	INTERFACCIA QUADRO ELETTRICO +Q1	13	INDICE SCHEMA ELETTRICO
7	PAGINA VUOTA	14	INDICE SCHEMA ELETTRICO

Fosber

FOSBER S.p.A.
via Provinciale per Camaiore, 27/28 55060 Monsagrati (Lucca) - ITALIA
T. +39.0583.3891 - F. +39.0583.389205/385567
E-mail: info@fosber.it

TWIN 400 T.1
INDICE SCHEMA ELETTRICO
ÍNDICE ESQUEMA ELÉCTRICO

customer	CORRUGADORA GUATEMA	REL	L.CENTI	28/06/17	issued	28/06/2017
job nr.	4607	REV			proj. sect.	=TW4+C0
serial nr.	COM17279	DEF			page	13 of 14

1	SECCIÓN ESQUEMA ELÉCTRICO	8	DEVICE-NET NET-WORK
2	PAG. DEJADA EN BLANCO INTENCIO.	9	LAY-OUT PLACA
3	I/O CONTROLES CONSOLA	10	LAY - OUT CONSOLA
4	I/O CONTROLES CONSOLA	11	CONJUNTO CABLES DE CONEXIÓN
5	PAG. DEJADA EN BLANCO INTENCIO.	12	TABLERO DE BORNES +C0-X16
6	INTERFAZ CUADRO ELÉCTRICO +Q1	13	ÍNDICE ESQUEMA ELÉCTRICO
7	PAG. INTENCIONADAMENTE EN BLANCO	14	ÍNDICE ESQUEMA ELÉCTRICO

Fosber

FOSBER S.p.A.
via Provinciale per Camaiore, 27/28 55060 Monsagrati (Lucca) - ITALIA
T. +39.0583.3891 - F. +39.0583.389205/385567
E-mail: info@fosber.it

TWIN 400 T.1
INDICE SCHEMA ELETTRICO
ÍNDICE ESQUEMA ELECTRICO

customer	CORRUGADORA GUATEMA	REL	L.CENTI	28/06/17	issued	28/06/2017
job nr.	4607	REV			proj. sect.	=TW4+C0
serial nr.	COM17279	DEF			page	14 of 14

TWIN 400 T.1

=TW4+B0

FOSBER S.p.A.
via Provinciale per Camaiore, 27/28 55060 Monsagrati (Lucca) - ITALIA
T. +39.0583.3891 - F. +39.0583.389205/385567
E-mail: info@fosber.it

TWIN 400 T.1
SEZIONE SCHEMA ELETTRICO
SECCIÓN ESQUEMA ELÉCTRICO

customer	**CORRUGADORA GUATEMA**	REL	**L.CENTI**	**28/06/17**	issued	**28/06/2017**
job nr.	**4607**	REV			proj. sect.	**=TW4+B0**
serial nr.	**COM17279**	DEF			page	**1 of 26**

FOSBER S.p.A.
via Provinciale per Camaiore, 27/28 55060 Monsagrati (Lucca) - ITALIA
T. +39.0583.3891 - F. +39.0583.389205/385567
E-mail: info@fosber.it

TWIN 400 T.1

PAGINA LASCIATA VUOTA
PÁGINA DEJADA EN BLANCO

customer	**CORRUGADORA GUATEMA**	REL	**L.CENTI**	**28/06/17**	issued	**28/06/2017**
job nr.	**4607**	REV			proj. sect.	**=TW4+B0**
serial nr.	**COM17279**	DEF			page	**2 of 26**

FOSBER S.p.A.
via Provinciale per Camaiore, 27/28 55060 Monsagrati (Lucca) - ITALIA
T. +39.0583.3891 - F. +39.0583.389205/385567
E-mail: info@fosber.it

TWIN 400 T.1
SEGNALI COMANDI COLTELLI ASSE 1
SEÑALES MANDOS CUCHILLAS EJE 1

customer	**CORRUGADORA GUATEMA**	REL	**L.CENTI**	**28/06/17**	issued	**28/06/2017**
job nr.	**4607**	REV			proj. sect.	**=TW4+B0**
serial nr.	**COM17279**	DEF			page	**3 of 26**

FOSBER S.p.A.
via Provinciale per Camaiore, 27/28 55060 Monsagrati (Lucca) - ITALIA
T. +39.0583.3891 - F. +39.0583.389205/385567
E-mail: info@fosber.it

TWIN 400 T.1
SEGNALI COMANDI NONO COLTELLO
SEÑALES MANDOS NOVENA CUCHILLA

customer	**CORRUGADORA GUATEMA**	REL	**L.CENTI**	**28/06/17**	issued	**28/06/2017**
job nr.	**4607**	REV			proj. sect.	**=TW4+B0**
serial nr.	**COM17279**	DEF			page	**4 of 26**

FOSBER S.p.A.
via Provinciale per Camaiore, 27/28 55060 Monsagrati (Lucca) - ITALIA
T. +39.0583.3891 - F. +39.0583.389205/385567
E-mail: info@fosber.it

TWIN 400 T.1

SEGNALI COMANDI COLTELLI ASSE 2
SEÑALES MANDOS CUCHILLAS EJE 2

customer	**CORRUGADORA GUATEMA**	REL	**L.CENTI**	**28/06/17**	issued	**28/06/2017**
job nr.	**4607**	REV			proj. sect.	**=TW4+B0**
serial nr.	**COM17279**	DEF			page	**5 of 26**

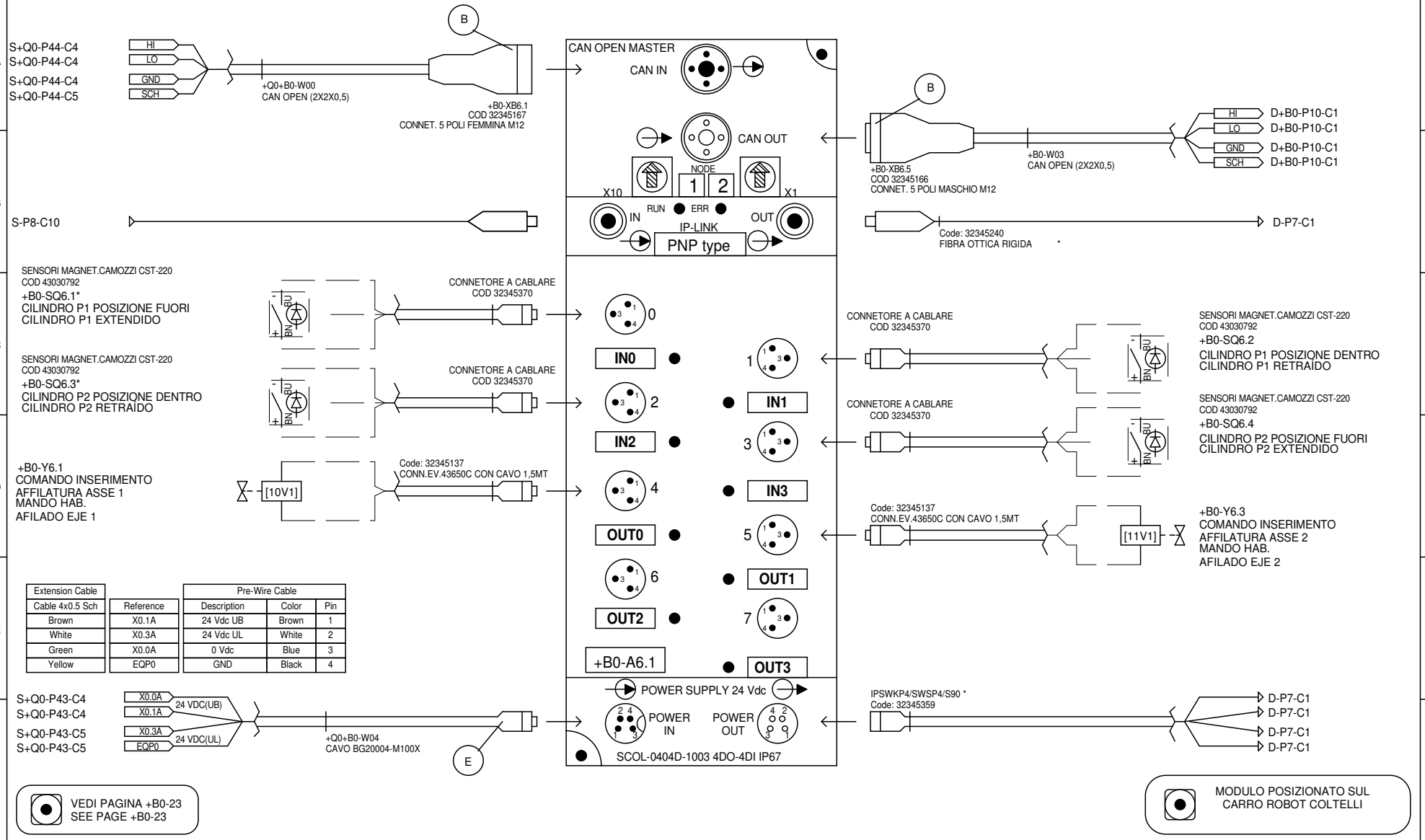

Extension Cable		Pre-Wire Cable		
Cable 4x0.5 Sch	Reference	Description	Color	Pin
Brown	X0.1A	24 Vdc UB	Brown	1
White	X0.3A	24 Vdc UL	White	2
Green	X0.0A	0 Vdc	Blue	3
Yellow	EQP0	GND	Black	4

Fosber
FOSBER S.p.A.
via Provinciale per Camaiore, 27/28 55060 Monsagrati (Lucca) - ITALIA
T. +39.0583.3891 - F. +39.0583.389205/385567
E-mail: info@fosber.it

TWIN 400 T.1
SEGNALI ROBOT COLTELLI MST
SEÑALES ROBOT CUCHILLAS MST

customer	CORRUGADORA GUATEMA	REL	L.CENTI	28/06/17	issued	29/06/2017
job nr.	4607	REV			proj. sect.	=TW4+B0
serial nr.	COM17279	DEF			page	6 of 26

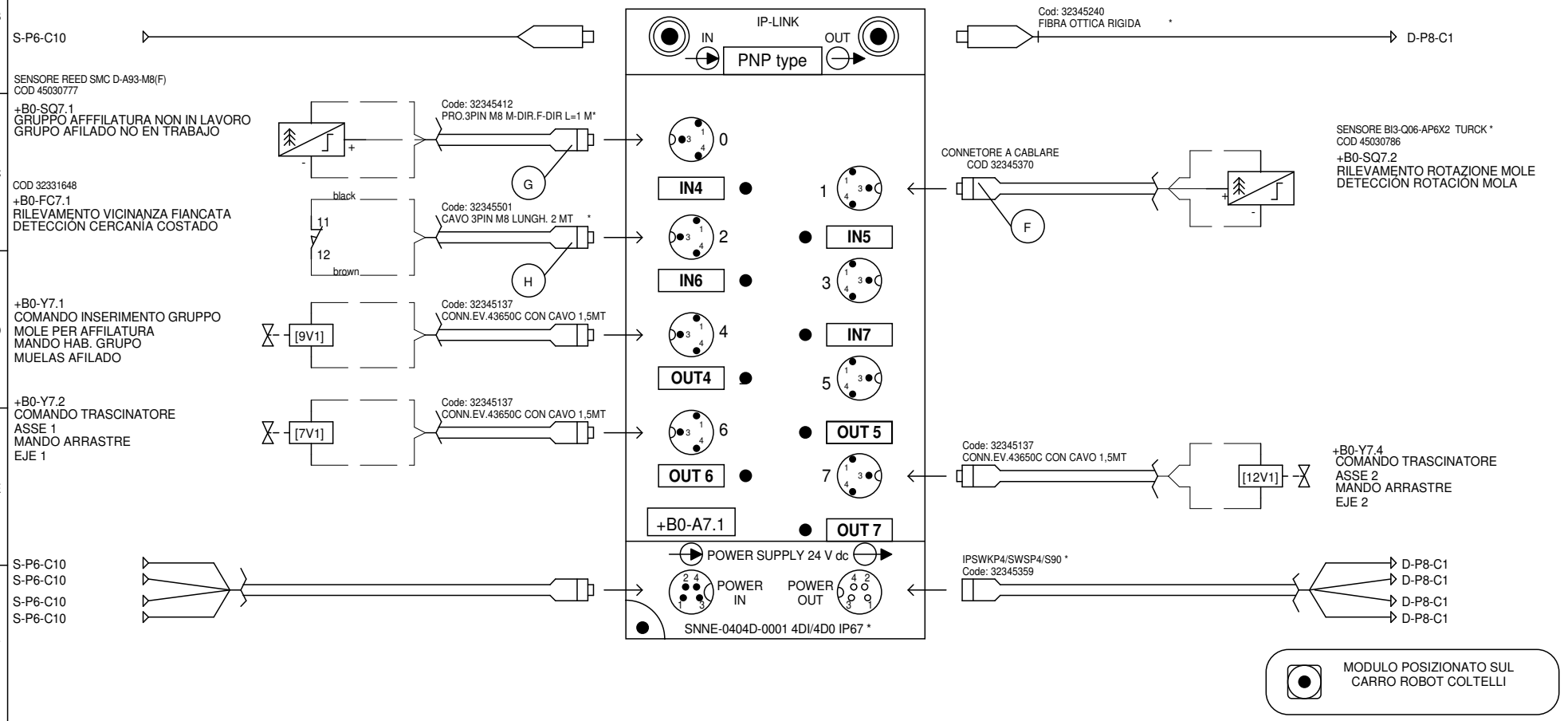

FOSBER S.p.A.
via Provinciale per Camaiore, 27/28 55060 Monsagrati (Lucca) - ITALIA
T. +39.0583.3891 - F. +39.0583.389205/385567
E-mail: info@fosber.it

TWIN 400 T.1
SEGNALI ROBOT COLTELLI SLV
SEÑALES ROBOT CUCHILLAS SLV

customer	CORRUGADORA GUATEMA	REL	L.CENTI	28/06/17	issued	28/06/2017
job nr.	4607	REV			proj. sect.	=TW4+B0
serial nr.	COM17279	DEF			page	7 of 26

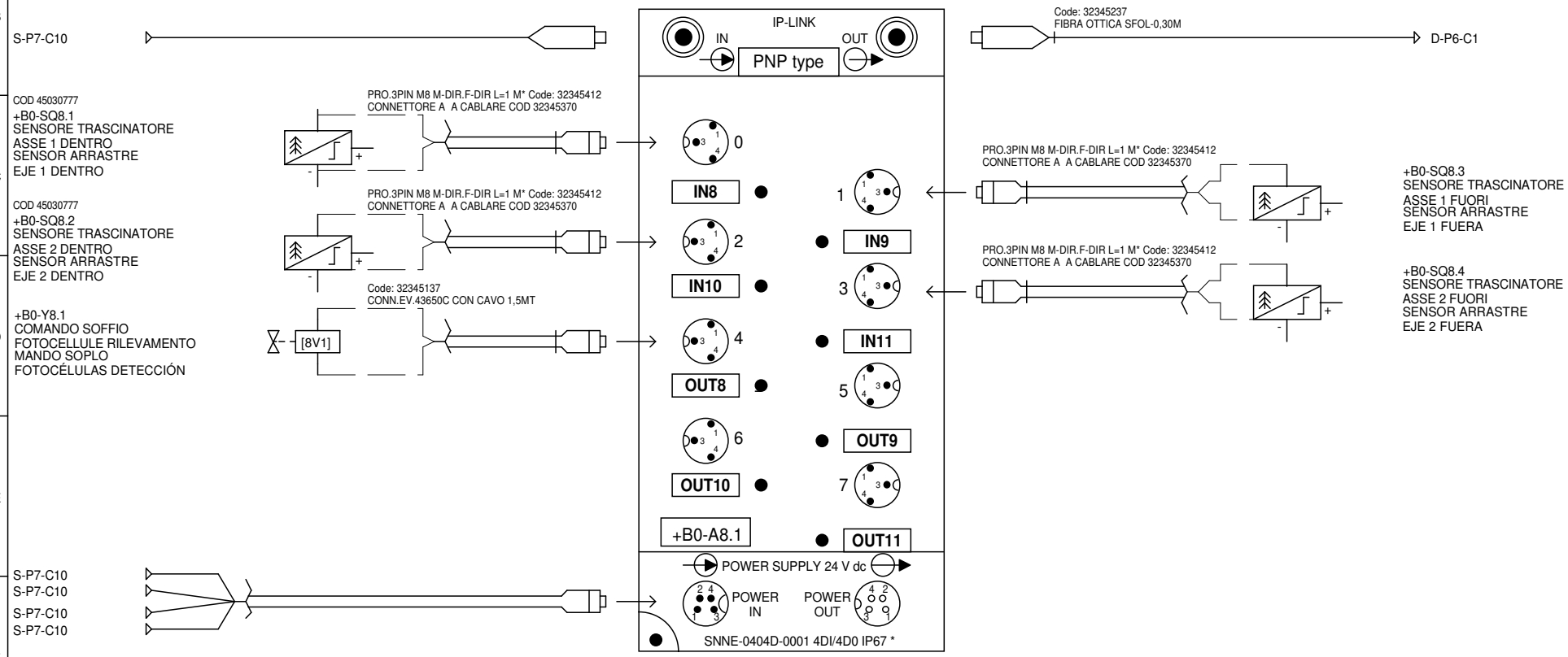

FOSBER S.p.A.
via Provinciale per Camaiore, 27/28 55060 Monsagrati (Lucca) - ITALIA
T. +39.0583.3891 - F. +39.0583.389205/385567
E-mail: info@fosber.it

TWIN 400 T.1
SEGNALI ROBOT COLTELLI SLV
SEÑALES ROBOT CUCHILLAS SLV

customer	CORRUGADORA GUATEMA	REL	L.CENTI	28/06/17	issued	28/06/2017
job nr.	4607	REV			proj. sect.	=TW4+B0
serial nr.	COM17279	DEF			page	8 of 26

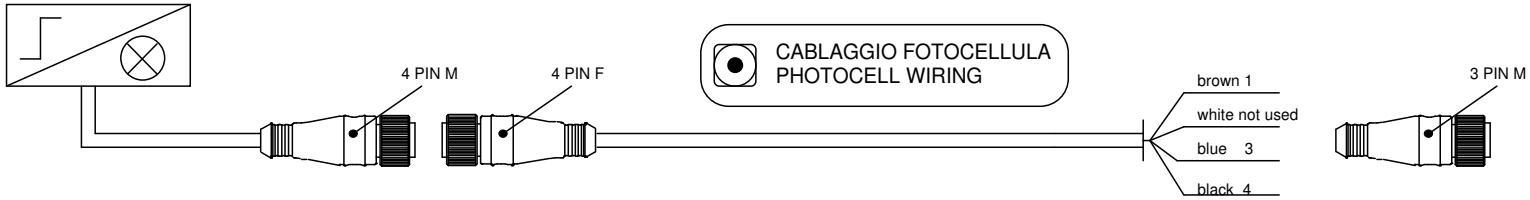

CABLAGGIO FOTOCELLULA
PHOTOCELL WIRING

FOTOCEL. BANNER VS1AP5CV10Q *
Code:51110160
+B0-B9.3
FOTOCELLULA DESTRA
RILEVAMENTO UTENSILI ASSE 2
FOTOCÉLULA DERECHA
DETECCIÓN UTENSILIOS EJE 2

Code: 32345088
PRO.4PIN M8 F-DIR. 3MT

FOTOCEL. BANNER VS1AP5CV10Q *
Code: 51110160
+B0-B9.1
FOTOCELLULA DESTRA
RILEVAMENTO UTENSILI ASSE 1
FOTOCÉLULA DERECHA
DETECCIÓN UTENSILIOS EJE 1

Code: 32345088
PRO.4PIN M8 F-DIR. 3MT

ESCHA

3
IN 3
4
1
IN 1
IN 4
2
+B0-A9.1
IN 2

Code: 32345088
PRO.4PIN M8 F-DIR. 3MT

FOTOCEL. BANNER VS1AP5CV10Q *
Code: 51110160
+B0-B9.4
FOTOCELLULA SINISTRA
RILEVAMENTO UTENSILI ASSE 2
FOTOCÉLULA IZQUIERDA
DETECCIÓN UTENSILIOS EJE 2

Code: 32345088
PRO.4PIN M8 F-DIR. 3MT

FOTOCEL. BANNER VS1AP5CV10Q *
Code: 51110160
+B0-B9.2
FOTOCELLULA SINISTRA
RILEVAMENTO UTENSILI ASSE 1
FOTOCÉLULA IZQUIERDA
DETECCIÓN UTENSILIOS EJE 1

SCAT.DERIV.PNP 4VIE CONNETT.

+B0-A9.2
SCAT.DERIV.PNP 4VIE 4MBM8-3P2
COD 32345026

1 2 3 4 5 6 7 8

+B0+Q0-W10
CAVO PRECABL. M12-LIBERO 15MT

D+Q0-P42-C4	RISP.1
D+Q0-P42-C5	RISP.2
D+Q0-P42-C5	RISP.3
D+Q0-P42-C5	RISP.4
S+Q0-P42-C3	X0.1A
S+Q0-P42-C3	X0.0A

MODULO POSIZIONATO SUL
CARRO ROBOT COLTELLI

Fosber
FOSBER S.p.A.
via Provinciale per Camaiore, 27/28 55060 Monsagrati (Lucca) - ITALIA
T. +39.0583.3891 - F. +39.0583.389205/385567
E-mail: info@fosber.it

TWIN 400 T.1
SENSORI RILEVAMENTO UTENSILI
SENSORES DETECCIÓN UTENSILIOS

customer	CORRUGADORA GUATEMA	REL	L.CENTI	28/06/17	issued	28/06/2017
job nr.	4607	REV			proj. sect.	=TW4+B0
serial nr.	COM17279	DEF			page	9 of 26

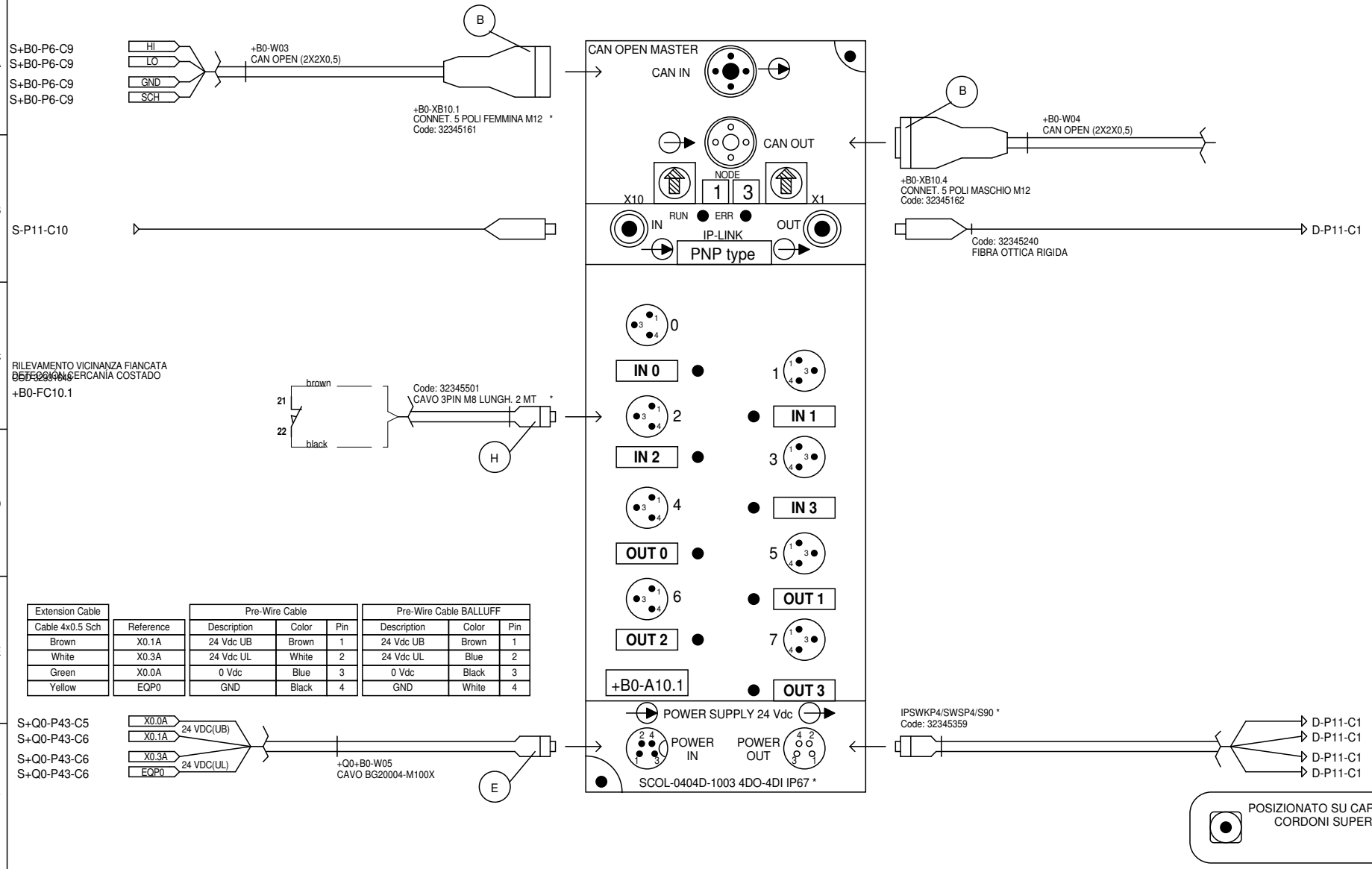

Extension Cable		Pre-Wire Cable			Pre-Wire Cable BALLUFF		
Cable 4x0.5 Sch	Reference	Description	Color	Pin	Description	Color	Pin
Brown	X0.1A	24 Vdc UB	Brown	1	24 Vdc UB	Brown	1
White	X0.3A	24 Vdc UL	White	2	24 Vdc UL	Blue	2
Green	X0.0A	0 Vdc	Blue	3	0 Vdc	Black	3
Yellow	EQP0	GND	Black	4	GND	White	4

FOSBER S.p.A.
via Provinciale per Camaiore, 27/28 55060 Monsagrati (Lucca) - ITALIA
T. +39.0583.3891 - F. +39.0583.389205/385567
E-mail: info@fosber.it

TWIN 400 T.1
SEGNALI ROBOT CORDONI 1 SUP. MST
SEÑALES ROBOT HENDEDORES 1 SUP. MST

customer	CORRUGADORA GUATEMA	REL	L.CENTI	28/06/17	issued	28/06/2017
job nr.	4607	REV			proj. sect.	=TW4+B0
serial nr.	COM17279	DEF			page	10 of 26

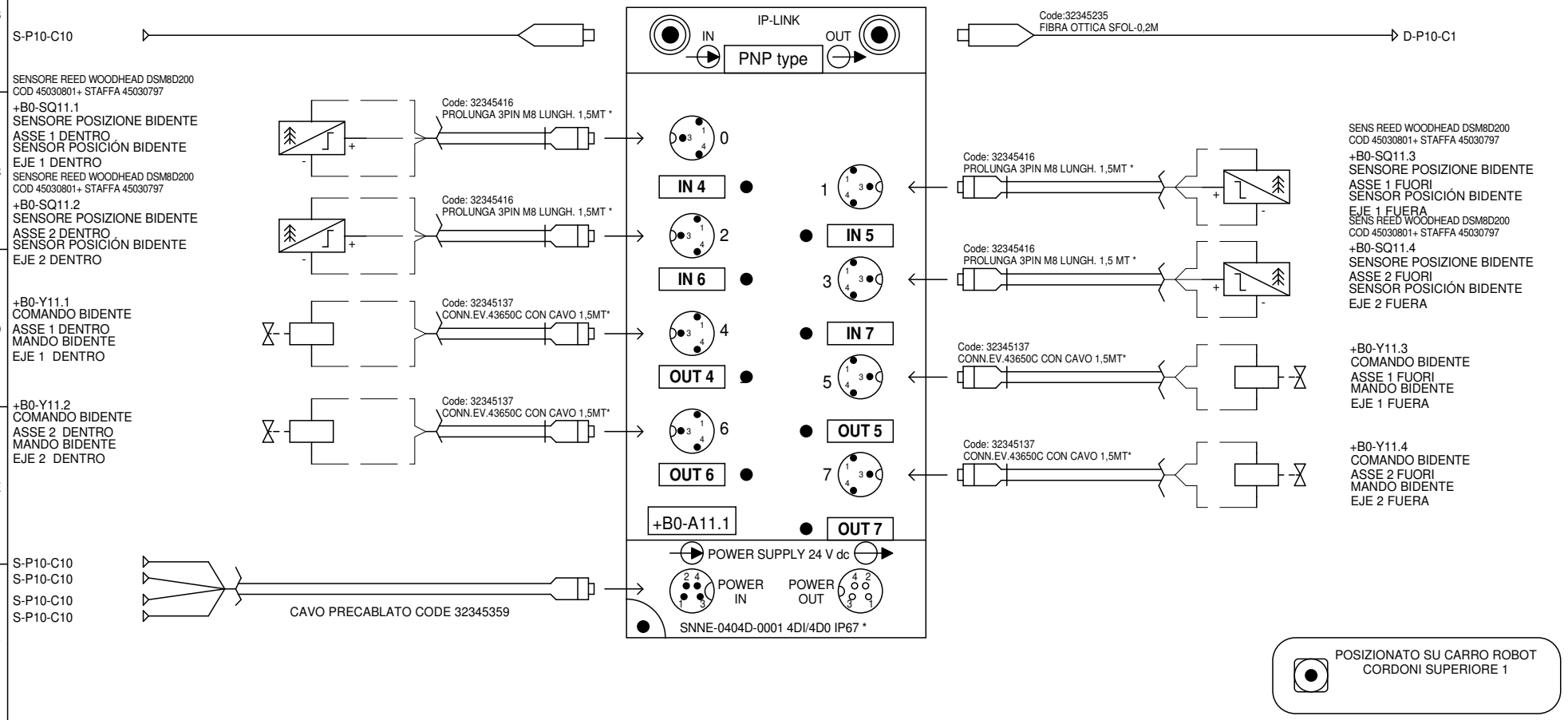

Fosber

FOSBER S.p.A.
via Provinciale per Camaiore, 27/28 55060 Monsagrati (Lucca) - ITALIA
T. +39.0583.3891 - F. +39.0583.389205/385567
E-mail: info@fosber.it

TWIN 400 T.1
SEGNALI ROBOT CORDONI 1 SUP. SLV
SEÑALES ROBOT HENDEDORES 1 SUP. SLV

customer	CORRUGADORA GUATEMA	REL	L.CENTI	28/06/17	issued	28/06/2017
job nr.	4607	REV			proj. sect.	=TW4+B0
serial nr.	COM17279	DEF			page	11 of 26

FOSBER S.p.A.
via Provinciale per Camaiore, 27/28 55060 Monsagrati (Lucca) - ITALIA
T. +39.0583.3891 - F. +39.0583.389205/385567
E-mail: info@fosber.it

TWIN 400 T.1
SEGNALI ROBOT CORDONI 2 SUP. MST
SEÑALES ROBOT HENDEDORES 2 SUP. MST

customer	**CORRUGADORA GUATEMA**	REL	**L.CENTI**	**28/06/17**	issued	**28/06/2017**
job nr.	**4607**	REV			proj. sect.	**=TW4+B0**
serial nr.	**COM17279**	DEF			page	**12 of 26**

FOSBER S.p.A.
via Provinciale per Camaiore, 27/28 55060 Monsagrati (Lucca) - ITALIA
T. +39.0583.3891 - F. +39.0583.389205/385567
E-mail: info@fosber.it

TWIN 400 T.1
SEGNALI ROBOT CORDONI 2 SUP. SLV
SEÑALES ROBOT HENDEDORES 2 SUP. SLV

customer	**CORRUGADORA GUATEMA**	REL	**L.CENTI**	**28/06/17**	issued	**28/06/2017**
job nr.	**4607**	REV			proj. sect.	**=TW4+B0**
serial nr.	**COM17279**	DEF			page	**13 of 26**

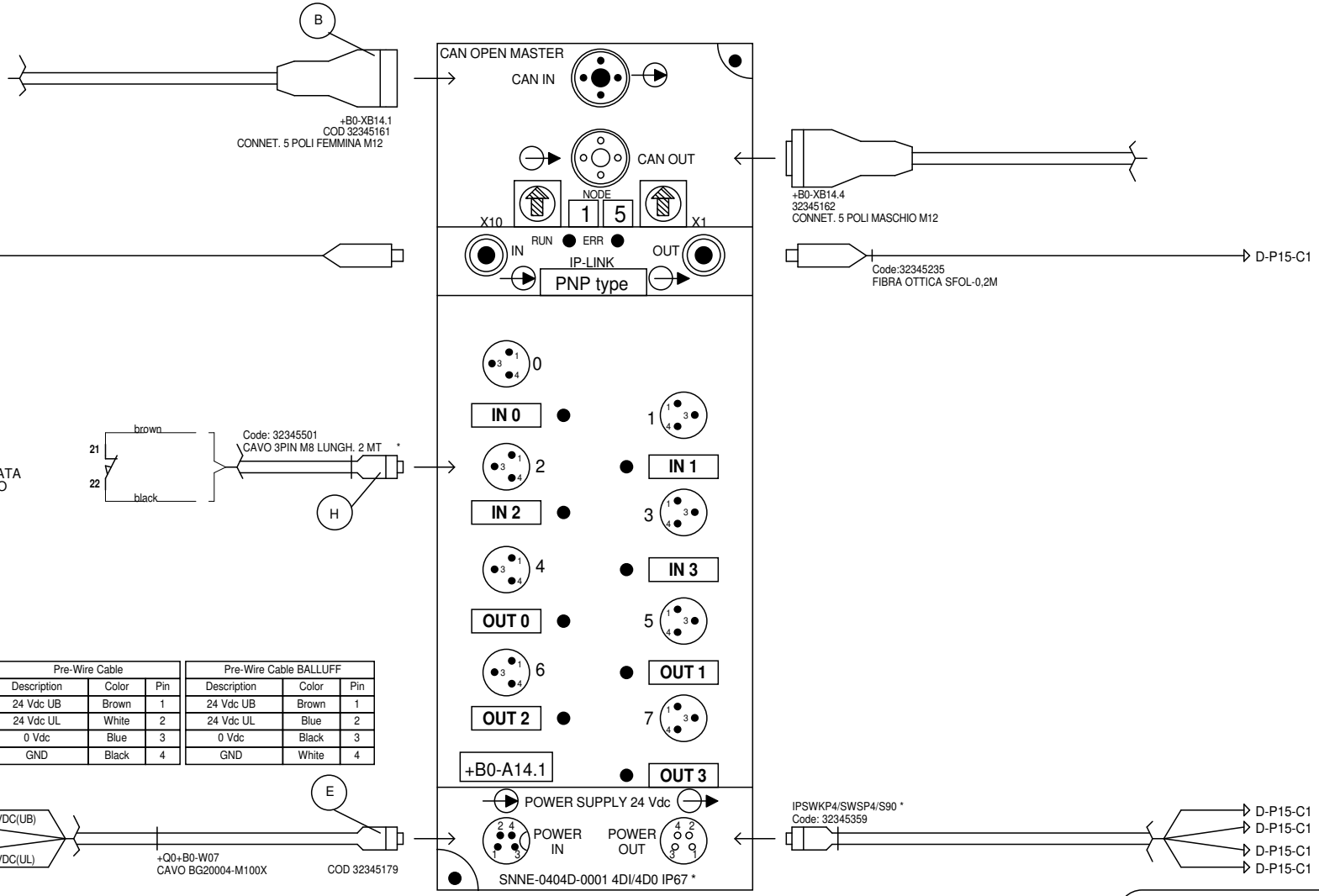

Extension Cable		Pre-Wire Cable			Pre-Wire Cable BALLUFF		
Cable 4x0.5 Sch	Reference	Description	Color	Pin	Description	Color	Pin
Brown	X0.1A	24 Vdc UB	Brown	1	24 Vdc UB	Brown	1
White	X0.3A	24 Vdc UL	White	2	24 Vdc UL	Blue	2
Green	X0.0A	0 Vdc	Blue	3	0 Vdc	Black	3
Yellow	EQP0	GND	Black	4	GND	White	4

Fosber

FOSBER S.p.A.
via Provinciale per Camaiore, 27/28 55060 Monsagrati (Lucca) - ITALIA
T. +39.0583.3891 - F. +39.0583.389205/385567
E-mail: info@fosber.it

TWIN 400 T.1
SEGNALI ROBOT CORDONI 1 INF. MST
SEÑALES ROBOT HENDEDORES 1 INF. MST

customer	CORRUGADORA GUATEMA	REL	L.CENTI	28/06/17	issued	28/06/2017
job nr.	4607	REV			proj. sect.	=TW4+B0
serial nr.	COM17279	DEF			page	14 of 26

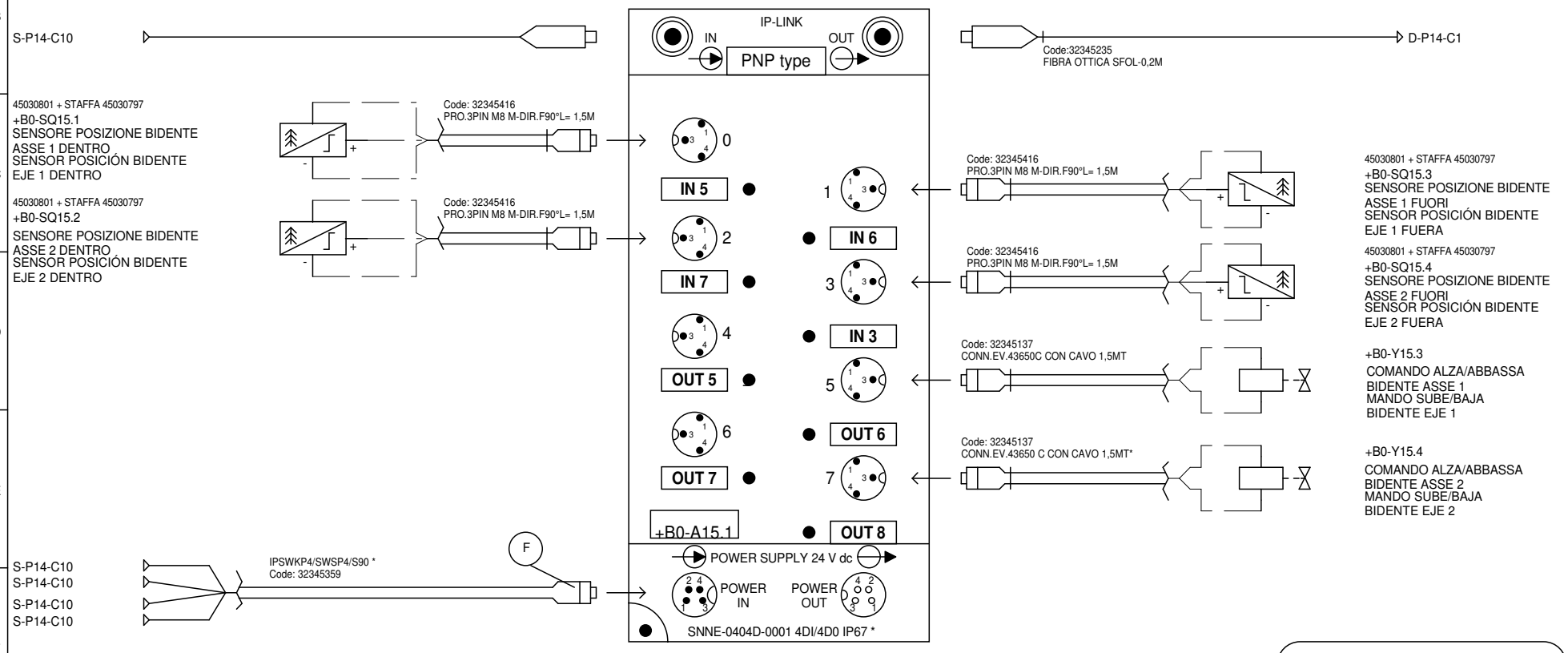

FOSBER S.p.A.
via Provinciale per Camaiore, 27/28 55060 Monsagrati (Lucca) - ITALIA
T. +39.0583.3891 - F. +39.0583.389205/385567
E-mail: info@fosber.it

TWIN 400 T.1
SEGNALI ROBOT CORDONI 1 INF. SLV
SEÑALES ROBOT HENDEDORES 1 INF. SLV

customer	CORRUGADORA GUATEMA	REL	L.CENTI	28/06/17	issued	28/06/2017
job nr.	4607	REV			proj. sect.	=TW4+B0
serial nr.	COM17279	DEF			page	15 of 26

FOSBER S.p.A.
via Provinciale per Camaiore, 27/28 55060 Monsagrati (Lucca) - ITALIA
T. +39.0583.3891 - F. +39.0583.389205/385567
E-mail: info@fosber.it

TWIN 400 T.1
SEGNALI ROBOT CORDONI 2 INF. MST
SEÑALES ROBOT HENDEDORES 2 INF. MST

customer	**CORRUGADORA GUATEMA**	REL	**L.CENTI**	**28/06/17**	issued	**28/06/2017**
job nr.	**4607**	REV			proj. sect.	**=TW4+B0**
serial nr.	**COM17279**	DEF			page	**16 of 26**

FOSBER S.p.A.
via Provinciale per Camaiore, 27/28 55060 Monsagrati (Lucca) - ITALIA
T. +39.0583.3891 - F. +39.0583.389205/385567
E-mail: info@fosber.it

TWIN 400 T.1
SEGNALI ROBOT CORDONI 2 INF. SLV
SEÑALES ROBOT HENDEDORES 2 INF. SLV

customer	**CORRUGADORA GUATEMA**	REL	**L.CENTI**	**28/06/17**	issued	**28/06/2017**
job nr.	**4607**	REV			proj. sect.	**=TW4+B0**
serial nr.	**COM17279**	DEF			page	**17 of 26**

CABLAGGIO DI TIPO A

CONNESSIONI RETE CAN OPEN QUADRO - MODULO

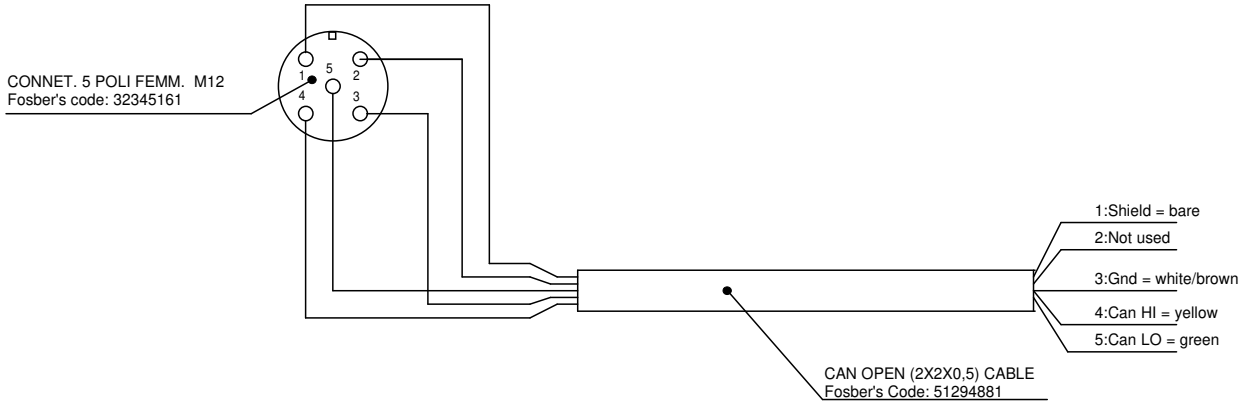

TABLE CONNECTION		
PIN1	Shield	bare
PIN2	Reserved	
PIN3	CAN GND	white/brown
PIN4	CAN HI	yellow
PIN5	CAN LO	green

CABLAGGIO DI TIPO B

CONNESSIONI RETE CAN OPEN MODULO - MODULO

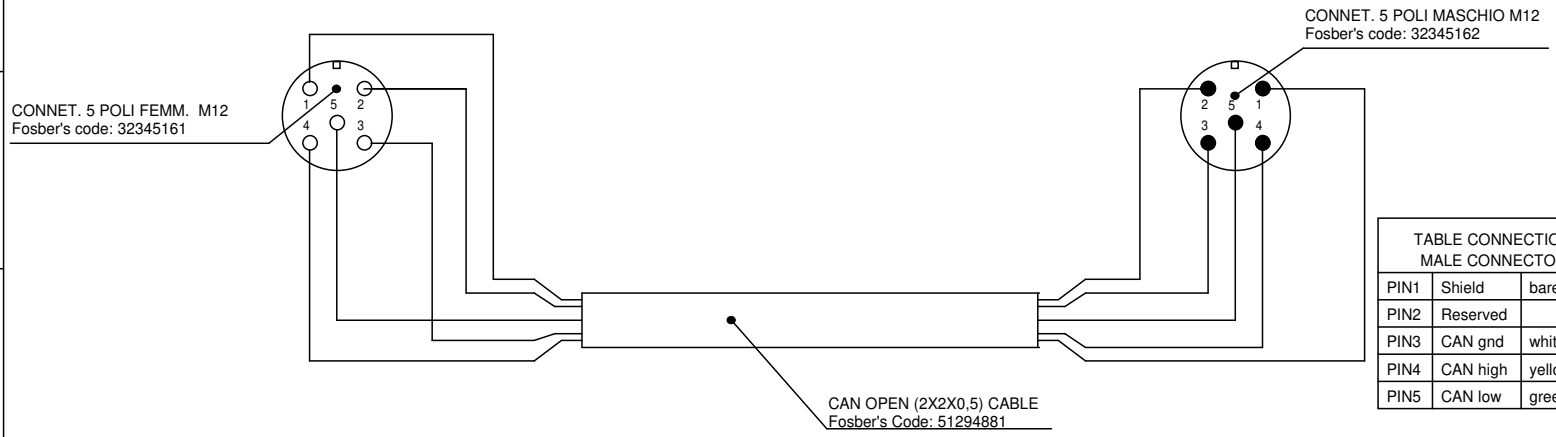

TABLE CONNECTION MALE CONNECTOR				TABLE CONNECTION FEMALE CONNECTOR		
PIN1	Shield	bare	→	PIN1	Shield	bare
PIN2	Reserved		→	PIN2	Reserved	
PIN3	CAN gnd	white/brown	→	PIN3	CAN gnd	white/brown
PIN4	CAN high	yellow	→	PIN4	CAN high	yellow
PIN5	CAN low	green	→	PIN5	CAN low	green

Fosber

FOSBER S.p.A.
via Provinciale per Camaiore, 27/28 55060 Monsagrati (Lucca) - ITALIA
T. +39.0583.3891 - F. +39.0583.389205/385567
E-mail: info@fosber.it

TWIN 400 T.1
COLLEGAMENTO TIPO A-B
CONEXIÓN TIPO A-B

customer	**CORRUGADORA GUATEMA**	REL	**L.CENTI**	**28/06/17**	issued	**28/06/2017**
job nr.	**4607**	REV			proj. sect.	**=TW4+B0**
serial nr.	**COM17279**	DEF			page	**18 of 26**

FOSBER S.p.A.
via Provinciale per Camaiore, 27/28 55060 Monsagrati (Lucca) - ITALIA
T. +39.0583.3891 - F. +39.0583.389205/385567
E-mail: info@fosber.it

TWIN 400 T.1

PAGINA VUOTA
PÁGINA VACÍA

customer	**CORRUGADORA GUATEMA**	REL	**L.CENTI**	**28/06/17**	issued	**28/06/2017**
job nr.	**4607**	REV			proj. sect.	**=TW4+B0**
serial nr.	**COM17279**	DEF			page	**19 of 26**

CABLAGGIO DI TIPO E

COLLEGAMENTO ALIMENTAZIONE MODULI IN CAN OPEN

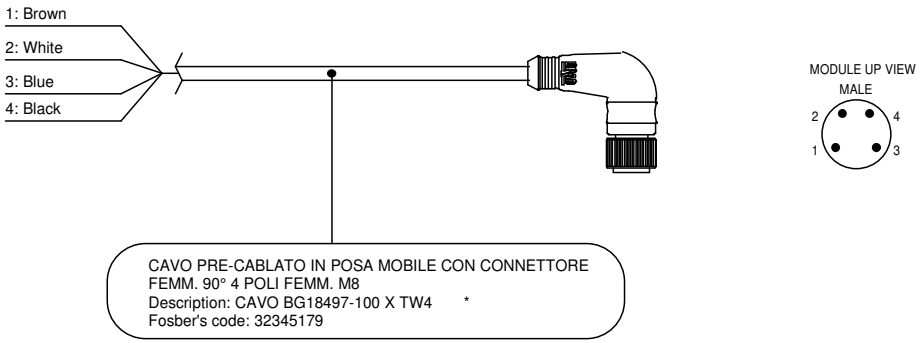

Extension Cable		Pre-Wire Cable			Pre-Wire Cable BALLUFF		
Cable 4x0.5 Sch	Reference	Description	Color	Pin	Description	Color	Pin
Brown	X0.1A	24 Vdc UB	Brown	1	24 Vdc UB	Brown	1
White	X0.3A	24 Vdc UL	White	2	24 Vdc UL	Blue	2
Green	X0.0A	0 Vdc	Blue	3	0 Vdc	Black	3
Yellow	EQP0	GND	Black	4	GND	White	4

CABLAGGIO DI TIPO F

RILEVAMENTO ROTAZIONE MOLE

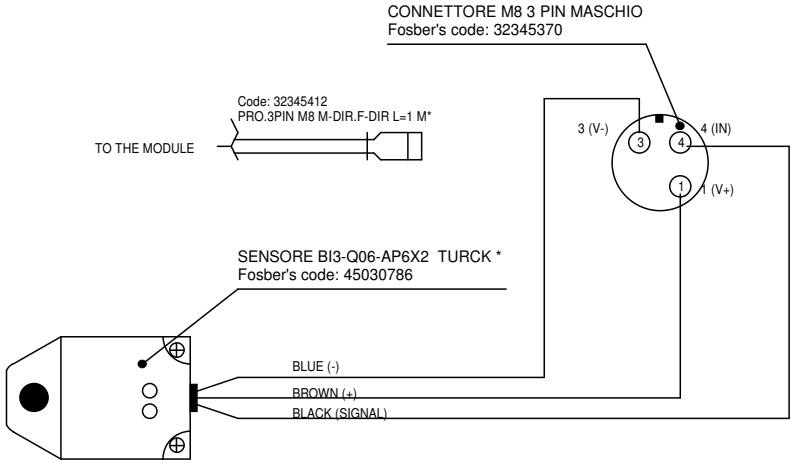

CABLAGGIO DI TIPO G

RILEVAMENTO GRUPPO AFFILATURA NON IN LAVORO

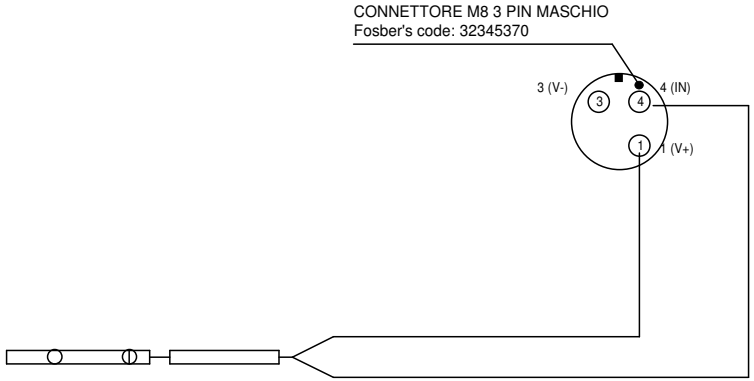

Fosber
FOSBER S.p.A.
via Provinciale per Camaiore, 27/28 55060 Monsagrati (Lucca) - ITALIA
T. +39.0583.3891 - F. +39.0583.389205/385567
E-mail: info@fosber.it

TWIN 400 T.1
COLLEGAMENTO TIPO E-F-G
CONEXIÓN TIPO E-F-G

customer	**CORRUGADORA GUATEMA**	REL	**L.CENTI**	**28/06/17**	issued	**28/06/2017**
job nr.	**4607**	REV			proj. sect.	**=TW4+B0**
serial nr.	**COM17279**	DEF			page	**20 of 26**

CABLAGGIO DI TIPO H

RILEVAMENTO VICINANZA FIANCATA

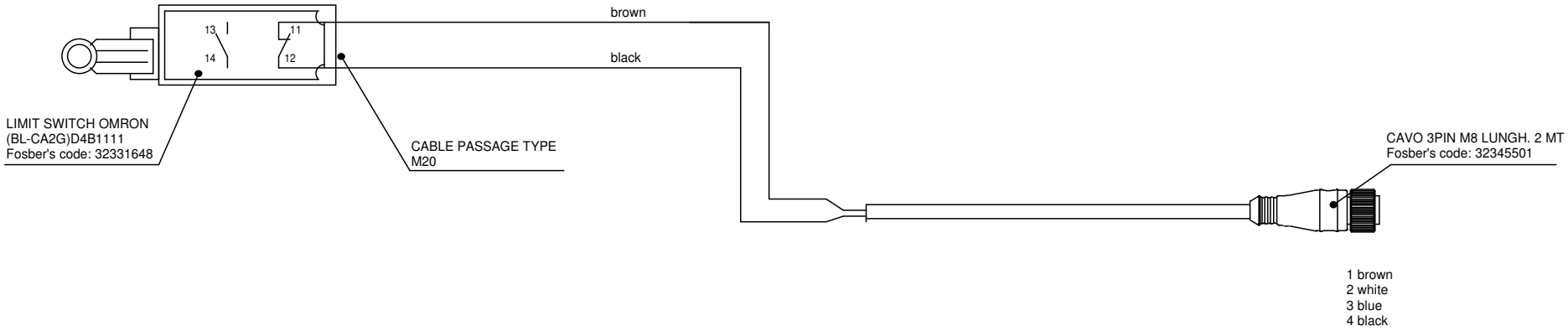

FOSBER S.p.A.
via Provinciale per Camaiore, 27/28 55060 Monsagrati (Lucca) - ITALIA
T. +39.0583.3891 - F. +39.0583.389205/385567
E-mail: info@fosber.it

TWIN 400 T.1
COLEGAMENTO TIPO H
CONEXIÓN TIPO H

customer	CORRUGADORA GUATEMA	REL	L.CENTI	28/06/17	issued	28/06/2017
job nr.	4607	REV			proj. sect.	=TW4+B0
serial nr.	COM17279	DEF			page	21 of 26

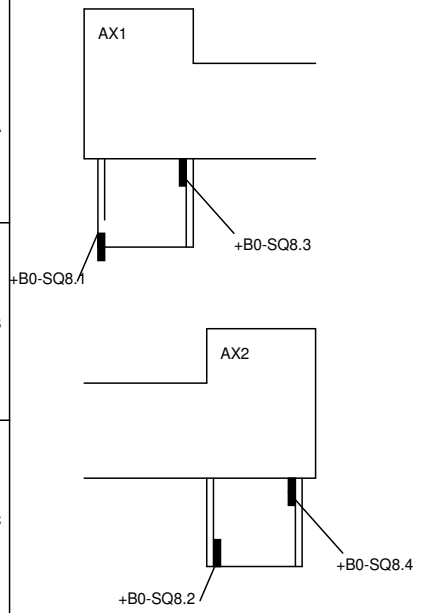

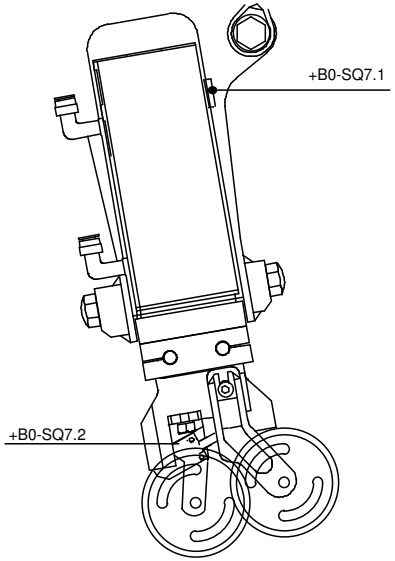

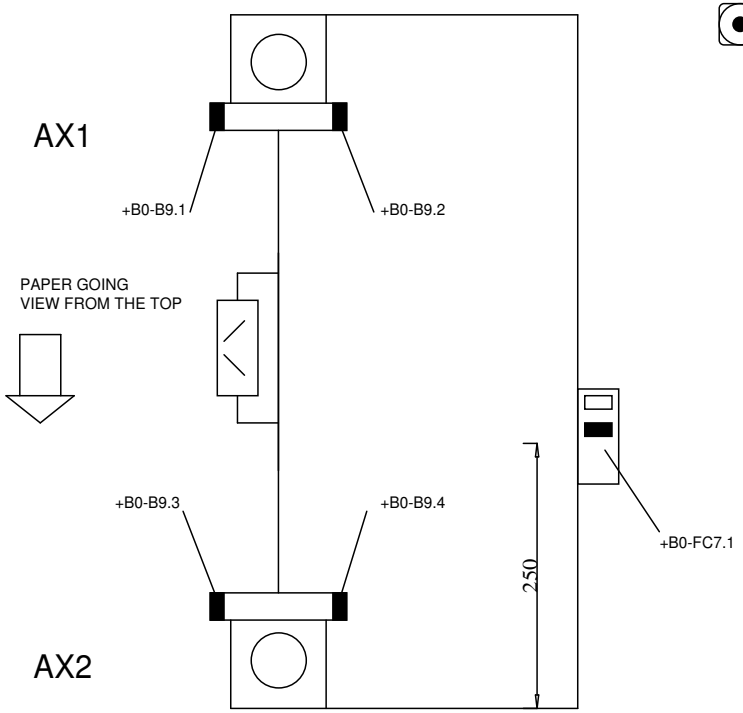

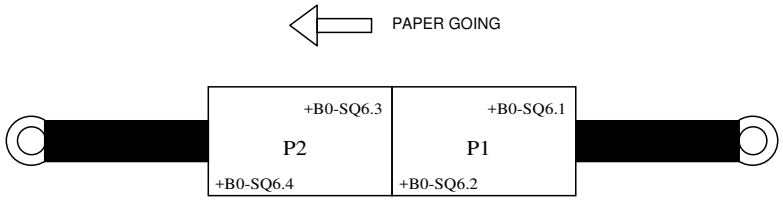

FOSBER S.p.A.
via Provinciale per Camaiore, 27/28 55060 Monsagrati (Lucca) - ITALIA
T. +39.0583.3891 - F. +39.0583.389205/385567
E-mail: info@fosber.it

TWIN 400 T.1
SCHEMA AFFILATURA
ESQUEMA AFILADO

customer	**CORRUGADORA GUATEMA**	REL	**L.CENTI**	**28/06/17**	issued	**28/06/2017**
job nr.	**4607**	REV			proj. sect.	**=TW4+B0**
serial nr.	**COM17279**	DEF			page	**22 of 26**

MAIN CABLING ON MACHINE CABINET =TW4 +B0

Nr.	INITIALS	CODE	TYPE	Ø (mm)	LENGTH (mt)	DESCRIPTION	START	ARRIVAL	TERMINAL BOX
1	+B0-W03	51294881	CAN OPEN (2X2X0,5)	9.2		CAN OPEN NETWORK +B0	+B0-XB6.5	+B0-XB10.1	DIRECT
2	+B0-W04	51294881	CAN OPEN (2X2X0,5)	9.2		CAN OPEN NETWORK +B0	+B0-XB10.4		DIRECT
3									
4									
5									
6									
7									

Fosber

FOSBER S.p.A.
via Provinciale per Camaiore, 27/28 55060 Monsagrati (Lucca) - ITALIA
T. +39.0583.3891 - F. +39.0583.389205/385567
E-mail: info@fosber.it

TWIN 400 T.1
COMPLESSIVO CAVI BORDO MACCHINA
CONJUNTO CABLES BORDO MAQUINA

customer	CORRUGADORA GUATEMA	REL	L.CENTI	28/06/17	issued	28/06/2017
job nr.	4607	REV			proj. sect.	=TW4+Q1
serial nr.	COM17279	DEF			page	23 of 26

MAIN CONNECTION CABLING CABINET =TW4 +B0

Nr.	INITIALS	CODE	TYPE	∅(mm)	LENGTH(mt)	DESCRIPTION	START	ARRIVAL	TERMINAL BOX	TYPE OF NET
						COMMUNICATION WITH +Q0				
1	+Q0+B0-W00	51294881	CAN OPEN (2X2X0,5)	7		CAN OPEN NETWORK +B0	+Q0	+B0-XB6.1		CAN OPEN NETWORK
2	+Q0+B0-W04	32345179	BG18497-010 X TW4	5		POWER SUPPLY CAN MODULE	+Q0	+B0-A6.1		POWER SUPPLY MODULE
3	+Q0+B0-W05	32345179	BG18497-010 X TW4	5		POWER SUPPLY CAN MODULE	+Q0	+B0-A10.1		POWER SUPPLY MODULE
4		32345179				POWER SUPPLY CAN MODULE				
5	+Q0+B0-W07	32345179	BG18497-010 X TW4	5		POWER SUPPLY CAN MODULE	+Q0	+B0-A14.1		POWER SUPPLY MODULE
6		32345179				POWER SUPPLY CAN MODULE				
7	+Q0+B0-W10	32345021	WAK8.005-10/S366 *			SENSOR CONNECTION ROBOT BLADE	+Q0	+B0-A9.1		LOGIC SIGNAL
8										
9										
						COMMUNICATION WITH +Q1				
1	+B0+Q1-W01	51294881	CAN OPEN (2X2X0,5)	8		CAN OPEN NETWORK	+B0	+Q1		CAN OPEN NETWORK [SERVICE PC]

Fosber

FOSBER S.p.A.
via Provinciale per Camaiore, 27/28 55060 Monsagrati (Lucca) - ITALIA
T. +39.0583.3891 - F. +39.0583.389205/385567
E-mail: info@fosber.it

TWIN 400 T.1
COMPLESSIVO CAVI DI CONNESSIONE
CONJUNTO CABLES DE CONEXIÓN

customer	**CORRUGADORA GUATEMA**	REL	**L.CENTI**	**28/06/17**	issued	**28/06/2017**
job nr.	**4607**	REV			proj. sect.	**=TW4+B0**
serial nr.	**COM17279**	DEF			page	**24 of 26**

1	SEZIONE SCHEMA ELETTRICO	14	SEGNALI ROBOT CORDONI 1 INF. MST
2	PAGINA LASCIATA VUOTA	15	SEGNALI ROBOT CORDONI 1 INF. SLV
3	SEGNALI COMANDI COLTELLI ASSE 1	16	SEGNALI ROBOT CORDONI 2 INF. MST
4	SEGNALI COMANDI NONO COLTELLO	17	SEGNALI ROBOT CORDONI 2 INF. SLV
5	SEGNALI COMANDI COLTELLI ASSE 2	18	COLLEGAMENTO TIPO A-B
6	SEGNALI ROBOT COLTELLI MST	19	PAGINA VUOTA
7	SEGNALI ROBOT COLTELLI SLV	20	COLLEGAMENTO TIPO E-F-G
8	SEGNALI ROBOT COLTELLI SLV	21	COLEGAMENTO TIPO H
9	SENSORI RILEVAMENTO UTENSILI	22	SCHEMA AFFILATURA
10	SEGNALI ROBOT CORDONI 1 SUP. MST	23	COMPLESSIVO CAVI BORDO MACCHINA
11	SEGNALI ROBOT CORDONI 1 SUP. SLV	24	COMPLESSIVO CAVI DI CONNESSIONE
12	SEGNALI ROBOT CORDONI 2 SUP. MST	25	INDICE SCHEMA ELETTRICO
13	SEGNALI ROBOT CORDONI 2 SUP. SLV	26	INDICE SCHEMA ELETTRICO

Fosber

FOSBER S.p.A.
via Provinciale per Camaiore, 27/28 55060 Monsagrati (Lucca) - ITALIA
T. +39.0583.3891 - F. +39.0583.389205/385567
E-mail: info@fosber.it

TWIN 400 T.1
INDICE SCHEMA ELETTRICO
ÍNDICE ESQUEMA ELÉCTRICO

customer	CORRUGADORA GUATEMA	REL	L.CENTI	28/06/17	issued	28/06/2017
job nr.	4607	REV			proj. sect.	=TW4+B0
serial nr.	COM17279	DEF			page	25 of 26

1	SECCIÓN ESQUEMA ELÉCTRICO	14	SEÑALES ROBOT HENDEDORES 1 INF. MST
2	PAG. DEJADA EN BLANCO INTENCIO.	15	SEÑALES ROBOT HENDEDORES 1 INF. SLV
3	SEÑALES MANDOS CUCHILLAS EJE 1	16	SEÑALES ROBOT HENDEDORES 2 INF. MST
4	SEÑALES MANDOS NOVENA CUCHILLA	17	SEÑALES ROBOT HENDEDORES 2 INF. SLV
5	SEÑALES MANDOS CUCHILLAS EJE 2	18	CONEXIÓN TIPO A-B
6	SEÑALES ROBOT CUCHILLAS MST	19	PAG. INTENCIONADAMENTE EN BLANCO
7	SEÑALES ROBOT CUCHILLAS SLV	20	CONEXIÓN TIPO E-F-G
8	SEÑALES ROBOT CUCHILLAS SLV	21	CONEXIÓN TIPO H
9	SENSORES DETECCIÓN UTENSILIOS	22	ESQUEMA AFILADO
10	SEÑALES ROBOT HENDEDORES 1 INF. MST	23	CONJ. CABLES BORDO MÁQUINA
11	SEÑALES ROBOT HENDEDORES 1 SUP. SLV	24	CONJUNTO CABLES DE CONEXIÓN
12	SEÑALES ROBOT HENDEDORES 2 SUP. MST	25	ÍNDICE ESQUEMA ELÉCTRICO
13	SEÑALES ROBOT HENDEDORES 2 SUP. SLV	26	ÍNDICE ESQUEMA ELÉCTRICO

Fosber

FOSBER S.p.A.
via Provinciale per Camaiore, 27/28 55060 Monsagrati (Lucca) - ITALIA
T. +39.0583.3891 - F. +39.0583.389205/385567
E-mail: info@fosber.it

TWIN 400 T.1
INDICE SCHEMA ELETTRICO
ÍNDICE ESQUEMA ELÉCTRICO

customer	CORRUGADORA GUATEMA	REL	L.CENTI	28/06/17	issued	28/06/2017
job nr.	4607	REV			proj. sect.	=TW4+B0
serial nr.	COM17279	DEF			page	26 of 26

TWIN 400 T.1

=TW4+B2

FOSBER S.p.A.
via Provinciale per Camaiore, 27/28 55060 Monsagrati (Lucca) - ITALIA
T. +39.0583.3891 - F. +39.0583.389205/385567
E-mail: info@fosber.it

TWIN 400 T.1
SEZIONE SCHEMA ELETTRICO
SECCIÓN ESQUEMA ELÉCTRICO

customer	**CORRUGADORA GUATEMA**	REL	**L.CENTI**	**28/06/17**	issued	**28/06/2017**
job nr.	**4607**	REV			proj. sect.	**=TW4+B2**
serial nr.	**COM17279**	DEF			page	**1 of 11**

FOSBER S.p.A.
via Provinciale per Camaiore, 27/28 55060 Monsagrati (Lucca) - ITALIA
T. +39.0583.3891 - F. +39.0583.389205/385567
E-mail: info@fosber.it

TWIN 400 T.1

PAGINA LASCIATA VUOTA
PÁGINA DEJADA EN BLANCO

customer	**CORRUGADORA GUATEMA**	REL	**L.CENTI**	**28/06/17**	issued	**28/06/2017**
job nr.	**4607**	REV			proj. sect.	**=TW4+B2**
serial nr.	**COM17279**	DEF			page	**2 of 11**

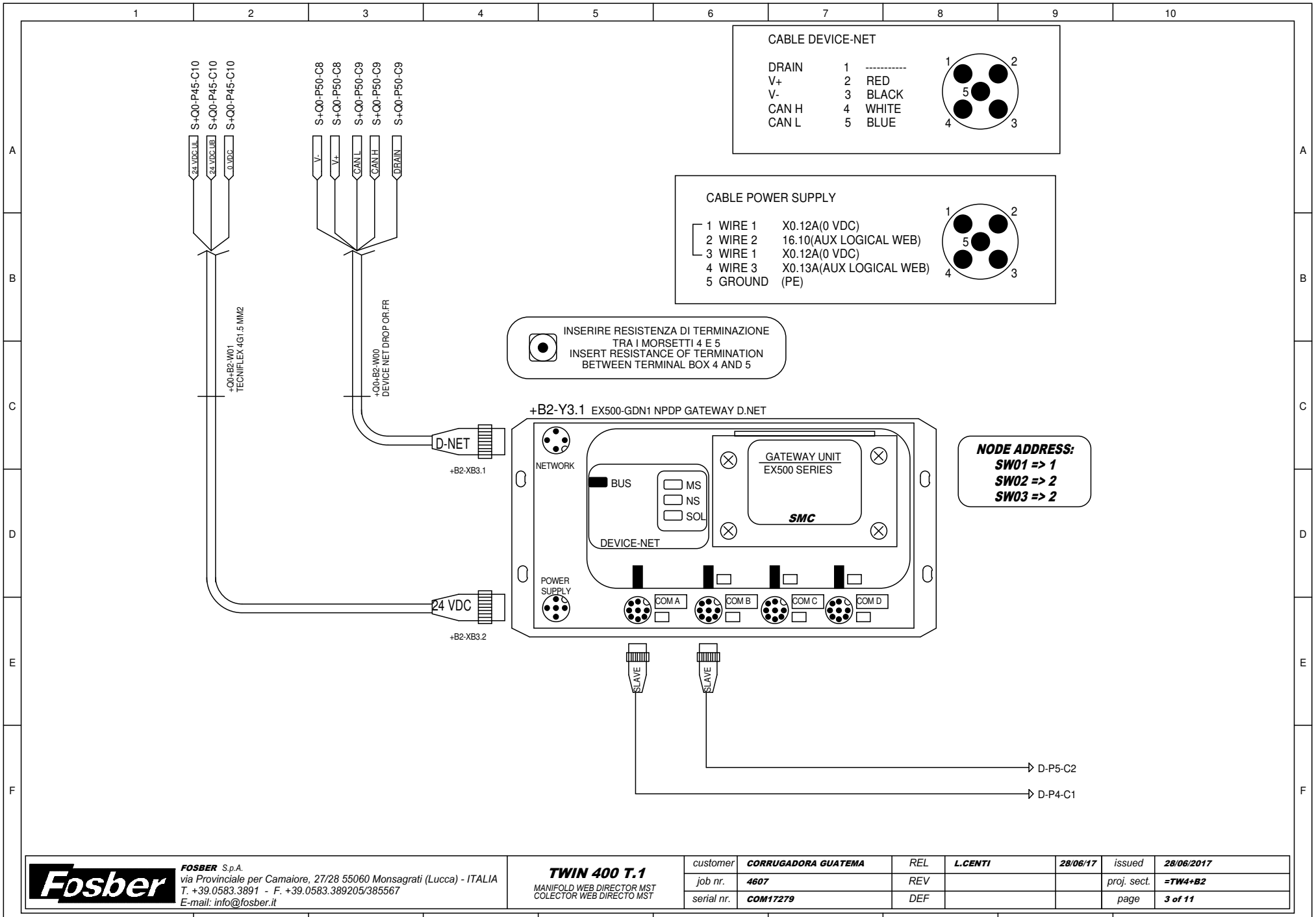

FOSBER S.p.A. via Provinciale per Camaiore, 27/28 55060 Monsagrati (Lucca) - ITALIA T. +39.0583.3891 - F. +39.0583.389205/385567 E-mail: info@fosber.it	**TWIN 400 T.1** MANIFOLD WEB DIRECTOR MST COLECTOR WEB DIRECTO MST	customer	**CORRUGADORA GUATEMA**	REL	**L.CENTI**	**28/06/17**	issued	**28/06/2017**
		job nr.	**4607**	REV			proj. sect.	**=TW4+B2**
		serial nr.	**COM17279**	DEF			page	**3 of 11**

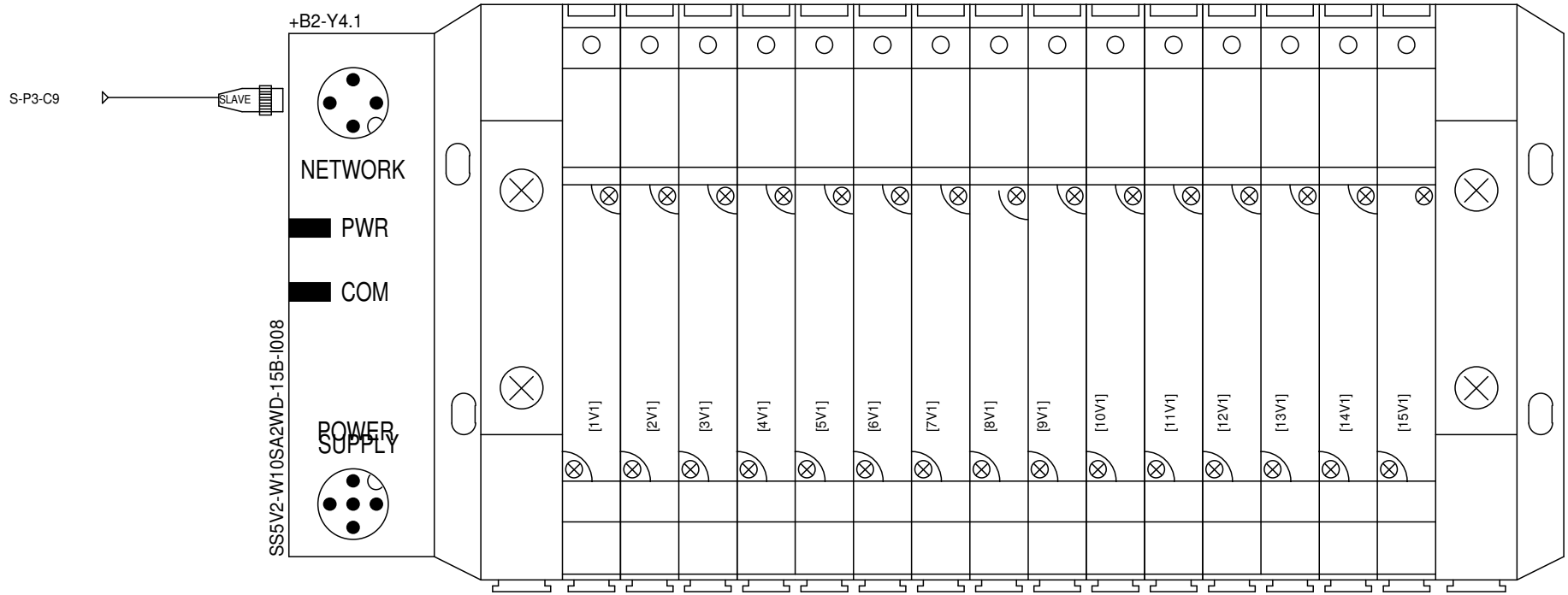

COMANDO ELETTROVALVOLA STECCA 1
MANDO ELECTROVALVULA BRIDA 1

COMANDO ELETTROVALVOLA STECCA 2
MANDO ELECTROVALVULA BRIDA 2

COMANDO ELETTROVALVOLA STECCA 3
MANDO ELECTROVALVULA BRIDA 3

COMANDO ELETTROVALVOLA STECCA 4
MANDO ELECTROVALVULA BRIDA 4

COMANDO ELETTROVALVOLA STECCA 5
MANDO ELECTROVALVULA BRIDA 5

COMANDO ELETTROVALVOLA STECCA 6
MANDO ELECTROVALVULA BRIDA 6

COMANDO ELETTROVALVOLA STECCA 7
MANDO ELECTROVALVULA BRIDA 7

COMANDO ELETTROVALVOLA STECCA 8
MANDO ELECTROVALVULA BRIDA 8

COMANDO ELETTROVALVOLA STECCA 9
MANDO ELECTROVALVULA BRIDA 9

COMANDO ELETTROVALVOLA STECCA 10
MANDO ELECTROVALVULA BRIDA 10

COMANDO ELETTROVALVOLA STECCA 11
MANDO ELECTROVALVULA BRIDA 11

COMANDO ELETTROVALVOLA STECCA 12
MANDO ELECTROVALVULA BRIDA 12

COMANDO ELETTROVALVOLA STECCA 13
MANDO ELECTROVALVULA BRIDA 13

ELETTROVALVOLA FLAP / RULLO
ELECTROV. FLAP / RODILLO

ELETTROVALVOLA SOFFI / SPAZZOLA
ELECTROV. SOPLADORES / CEPILLO

La stecca numero 1 e' la prima stecca dal lato sinistro rispetto al senso di marcia del cartone

FOSBER S.p.A.
via Provinciale per Camaiore, 27/28 55060 Monsagrati (Lucca) - ITALIA
T. +39.0583.3891 - F. +39.0583.389205/385567
E-mail: info@fosber.it

TWIN 400 T.1
SOTTOBASE MANIFOULD SLAVE
BASE SECUNDARIA COLECTOR SLAVE

customer	CORRUGADORA GUATEMA	REL	L.CENTI	28/06/17	issued	28/06/2017
job nr.	4607	REV			proj. sect.	=TW4+B2
serial nr.	COM17279	DEF			page	4 of 11

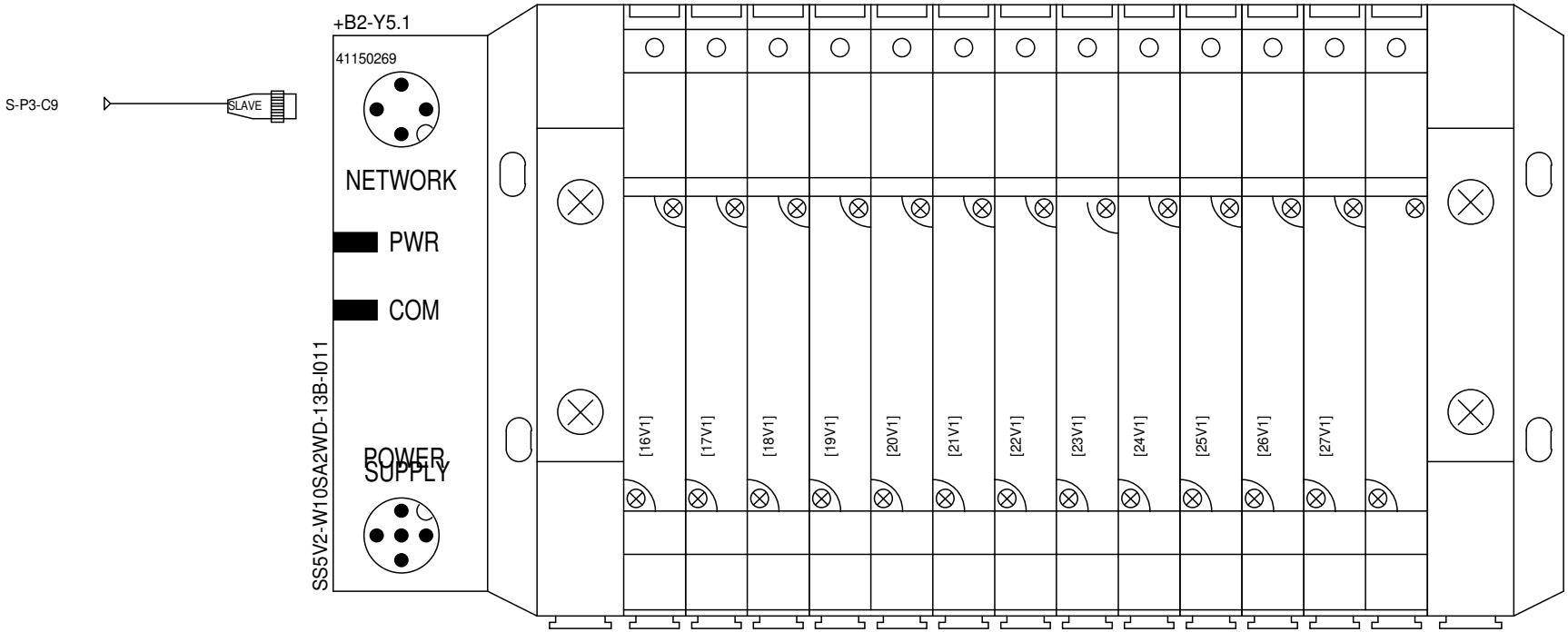

COMANDO ELETTROVALVOLA STECCA 14
MANDO ELECTROVALVULA BRIDA 14

COMANDO ELETTROVALVOLA STECCA 15
MANDO ELECTROVALVULA BRIDA 15

COMANDO ELETTROVALVOLA STECCA 16
MANDO ELECTROVALVULA BRIDA 16

COMANDO ELETTROVALVOLA STECCA 17
MANDO ELECTROVALVULA BRIDA 17

COMANDO ELETTROVALVOLA STECCA 18
MANDO ELECTROVALVULA BRIDA 18

COMANDO ELETTROVALVOLA STECCA 19
MANDO ELECTROVALVULA BRIDA 19

COMANDO ELETTROVALVOLA STECCA 20
MANDO ELECTROVALVULA BRIDA 20

COMANDO ELETTROVALVOLA STECCA 21
MANDO ELECTROVALVULA BRIDA 21

COMANDO ELETTROVALVOLA STECCA 22
MANDO ELECTROVALVULA BRIDA 22

COMANDO ELETTROVALVOLA STECCA 23
MANDO ELECTROVALVULA BRIDA 23

COMANDO ELETTROVALVOLA STECCA 24
MANDO ELECTROVALVULA BRIDA 24

COMANDO ELETTROVALVOLA STECCA 25
MANDO ELECTROVALVULA BRIDA 25

Fosber
FOSBER S.p.A.
via Provinciale per Camaiore, 27/28 55060 Monsagrati (Lucca) - ITALIA
T. +39.0583.3891 - F. +39.0583.389205/385567
E-mail: info@fosber.it

TWIN 400 T.1
SOTTOBASE MANIFOULD SLAVE
BASE SECUNDARIA COLECTOR SLAVE

customer	**CORRUGADORA GUATEMA**	REL	**L.CENTI**	**28/06/17**	issued	**28/06/2017**
job nr.	**4607**	REV			proj. sect.	**=TW4+B2**
serial nr.	**COM17279**	DEF			page	**5 of 11**

FOSBER S.p.A.
via Provinciale per Camaiore, 27/28 55060 Monsagrati (Lucca) - ITALIA
T. +39.0583.3891 - F. +39.0583.389205/385567
E-mail: info@fosber.it

TWIN 400 T.1
SOTTOBASE MANIFOULD SLAVE
BASE SECUNDARIA COLECTOR SLAVE

customer	**CORRUGADORA GUATEMA**	REL	**L.CENTI**	**28/06/17**	issued	**28/06/2017**
job nr.	**4607**	REV			proj. sect.	**=TW4+B2**
serial nr.	**COM17279**	DEF			page	**6 of 11**

FOSBER S.p.A.
via Provinciale per Camaiore, 27/28 55060 Monsagrati (Lucca) - ITALIA
T. +39.0583.3891 - F. +39.0583.389205/385567
E-mail: info@fosber.it

TWIN 400 T.1
SOTTOBASE MANIFOULD SLAVE
BASE SECUNDARIA COLECTOR SLAVE

customer	**CORRUGADORA GUATEMA**	REL	**L.CENTI**	**28/06/17**	issued	**28/06/2017**
job nr.	**4607**	REV			proj. sect.	**=TW4+B2**
serial nr.	**COM17279**	DEF			page	**7 of 11**

MAIN CABLING ON MACHINE CABINET =TW4 +B2

Nr.	INITIALS	CODE	TYPE	∅ (mm)	LENGTH (mt)	DESCRIPTION	START	ARRIVAL	TERMINAL BOX
1									
2									
3									
4									
5									
6									
7									
8									
9									
10									
11									
12									
13									
14									
15									
16									
17									
18									
19									
20									
21									
22									
23									
24									
25									
26									
27									
28									
29									
30									
31									
32									
33									
34									
35									

Fosber
FOSBER S.p.A.
via Provinciale per Camaiore, 27/28 55060 Monsagrati (Lucca) - ITALIA
T. +39.0583.3891 - F. +39.0583.389205/385567
E-mail: info@fosber.it

TWIN 400 T.1
COMPLESSIVO CAVI BORDO MACCHINA
CONJUNTO CABLES BORDO MAQUINA

customer	CORRUGADORA GUATEMA	REL	L.CENTI	28/06/17	issued	28/06/2017
job nr.	4607	REV			proj. sect.	=TW4+B2
serial nr.	COM17279	DEF			page	8 of 11

MAIN CONNECTION CABLING CABINET =TW4 +B2

Nr.	INITIALS	CODE	TYPE	∅(mm)	LENGTH(mt)	DESCRIPTION	START	ARRIVAL	TERMINAL BOX	TYPE OF NET
						COMMUNICATION WITH +Q0				
1	+Q0+B2-W00	51294885	DEVICE NET DROP OR.FR	7.20	11	DEVICE NET NETWORK FOR WEB DIRECTOR	+Q0	+B2	DIRECT	DEVICE-NET NETWORK
2	+Q0+B2-W01	31051266	TECNIFLEX 4G1.5 MM2	6.60	11	POWER SUPPLY FOR WEB DIRECTOR	+Q0	+B2	-X1	AUXILIARY SIGNAL
3	+Q0+B2-W02	31050719	CORD.G/V 6 MMQ		11	COLLEGAMENTO DI TERRA WEB DIRECTOR	+Q0	STRUTTURA WEB	DIRECT	TERRA WEB

FOSBER S.p.A.
via Provinciale per Camaiore, 27/28 55060 Monsagrati (Lucca) - ITALIA
T. +39.0583.3891 - F. +39.0583.389205/385567
E-mail: info@fosber.it

TWIN 400 T.1
COMPLESSIVO CAVI DI CONNESSIONE
CONJUNTO CABLES DE CONEXIÓN

customer	CORRUGADORA GUATEMA	REL	L.CENTI	28/06/17	issued	28/06/2017
job nr.	4607	REV			proj. sect.	=TW4+Q0
serial nr.	COM17279	DEF			page	9 of 11

1	SEZIONE SCHEMA ELETTRICO	7	SOTTOBASE MANIFOULD SLAVE
2	PAGINA LASCIATA VUOTA	8	COMPLESSIVO CAVI BORDO MACCHINA
3	MANIFOLD WEB DIRECTOR MST	9	COMPLESSIVO CAVI DI CONNESSIONE
4	SOTTOBASE MANIFOULD SLAVE	10	INDICE SCHEMA ELETTRICO
5	SOTTOBASE MANIFOULD SLAVE	11	INDICE SCHEMA ELETTRICO
6	SOTTOBASE MANIFOULD SLAVE		

Fosber

FOSBER S.p.A.
via Provinciale per Camaiore, 27/28 55060 Monsagrati (Lucca) - ITALIA
T. +39.0583.3891 - F. +39.0583.389205/385567
E-mail: info@fosber.it

TWIN 400 T.1
INDICE SCHEMA ELETTRICO
ÍNDICE ESQUEMA ELÉCTRICO

customer	CORRUGADORA GUATEMA	REL	L.CENTI	28/06/17	issued	28/06/2017
job nr.	4607	REV			proj. sect.	=TW4+B2
serial nr.	COM17279	DEF			page	10 of 11

1	SECCIÓN ESQUEMA ELÉCTRICO	7	BASE SECUNDARIA COLECTOR SLAVE
2	PAG. DEJADA EN BLANCO INTENCIO.	8	CONJ. CABLES BORDO MÁQUINA
3	COLECTOR WEB DIRECTO MST	9	CONJUNTO CABLES DE CONEXIÓN
4	BASE SECUNDARIA COLECTOR SLAVE	10	ÍNDICE ESQUEMA ELÉCTRICO
5	BASE SECUNDARIA COLECTOR SLAVE	11	ÍNDICE ESQUEMA ELÉCTRICO
6	BASE SECUNDARIA COLECTOR SLAVE		

Fosber

FOSBER S.p.A.
via Provinciale per Camaiore, 27/28 55060 Monsagrati (Lucca) - ITALIA
T. +39.0583.3891 - F. +39.0583.389205/385567
E-mail: info@fosber.it

TWIN 400 T.1
INDICE SCHEMA ELETTRICO
ÍNDICE ESQUEMA ELÉCTRICO

customer	**CORRUGADORA GUATEMA**	REL	**L.CENTI**	**28/06/17**	issued	**28/06/2017**
job nr.	**4607**	REV			proj. sect.	**=TW4+B2**
serial nr.	**COM17279**	DEF			page	**11 of 11**

TWIN 400 T.1

=TW4+N0

FOSBER S.p.A.
via Provinciale per Camaiore, 27/28 55060 Monsagrati (Lucca) - ITALIA
T. +39.0583.3891 - F. +39.0583.389205/385567
E-mail: info@fosber.it

TWIN 400 T.1
SEZIONE SCHEMA ELETTRICO
SECCIÓN ESQUEMA ELÉCTRICO

customer	**CORRUGADORA GUATEMA**	REL	**L.CENTI**	**28/06/17**	issued	**28/06/2017**
job nr.	**4607**	REV			proj. sect.	**=TW4+N0**
serial nr.	**COM17279**	DEF			page	**1 of 14**

FOSBER S.p.A.
via Provinciale per Camaiore, 27/28 55060 Monsagrati (Lucca) - ITALIA
T. +39.0583.3891 - F. +39.0583.389205/385567
E-mail: info@fosber.it

TWIN 400 T.1

PAGINA LASCIATA VUOTA
PÁGINA DEJADA EN BLANCO

customer	**CORRUGADORA GUATEMA**	REL	**L.CENTI**	**28/06/17**	issued	**28/06/2017**
job nr.	**4607**	REV			proj. sect.	**=TW4+N0**
serial nr.	**COM17279**	DEF			page	**2 of 14**

TWIN 400

RIF.	DESCRIZIONE
+Q0	POWER CABINET
+Q1	LOGIC CABINET
+B2	MANIFOLD WEB DIRECTOR
+C0	OUTLET CONSOLLE
+C1	CONSOLE SYNCRO STAND ALONE

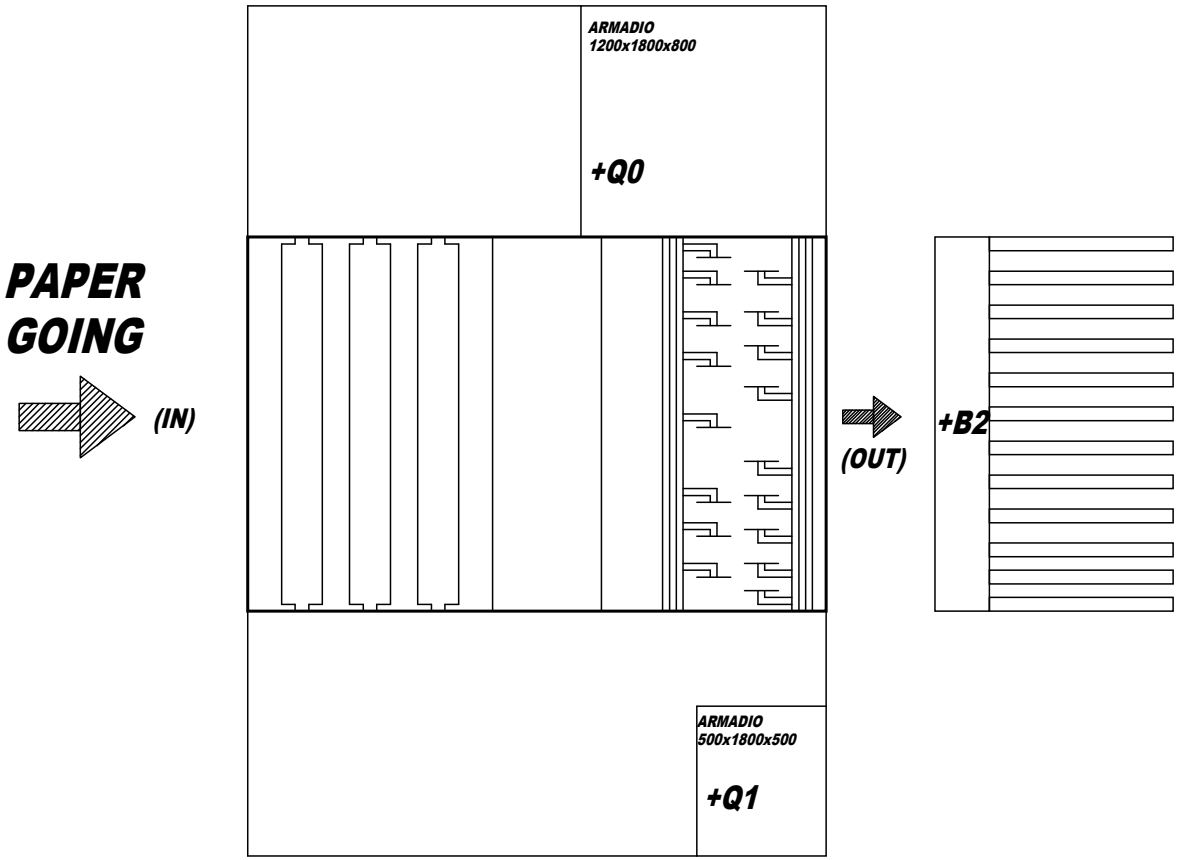

Fosber
FOSBER S.p.A.
via Provinciale per Camaiore, 27/28 55060 Monsagrati (Lucca) - ITALIA
T. +39.0583.3891 - F. +39.0583.389205/385567
E-mail: info@fosber.it

TWIN 400 T.1
LAY-OUT DISPOSIZIONE MACCHINA
LAY-OUT DISPOSICIÓN MÁQUINA

customer	CORRUGADORA GUATEMA	REL	L.CENTI	28/06/17	issued	28/06/2017
job nr.	4607	REV			proj. sect.	=TW4+N0
serial nr.	COM17279	DEF			page	3 of 14

1....6 Electric interlock model

A-B SENSAGUARD 440N-Z21SS2H
FOSBER CODE 32337040

1	ELETTROSERRATURA CARTER LATO QUADRO ELETTRICO DI POTENZA
2	ELETTOSERRATURA CARTER DI INGRESSO LATO OPRATORE
3	ELETTOSERRATURA CARTER LATO QUADRO DI LOGICA
4	ELETTOSERRATURA LATO USCITA QUADRO DI LOGICA
5	ELETTOSERRATURA LATO USCITA QUADRO DI POTENZA

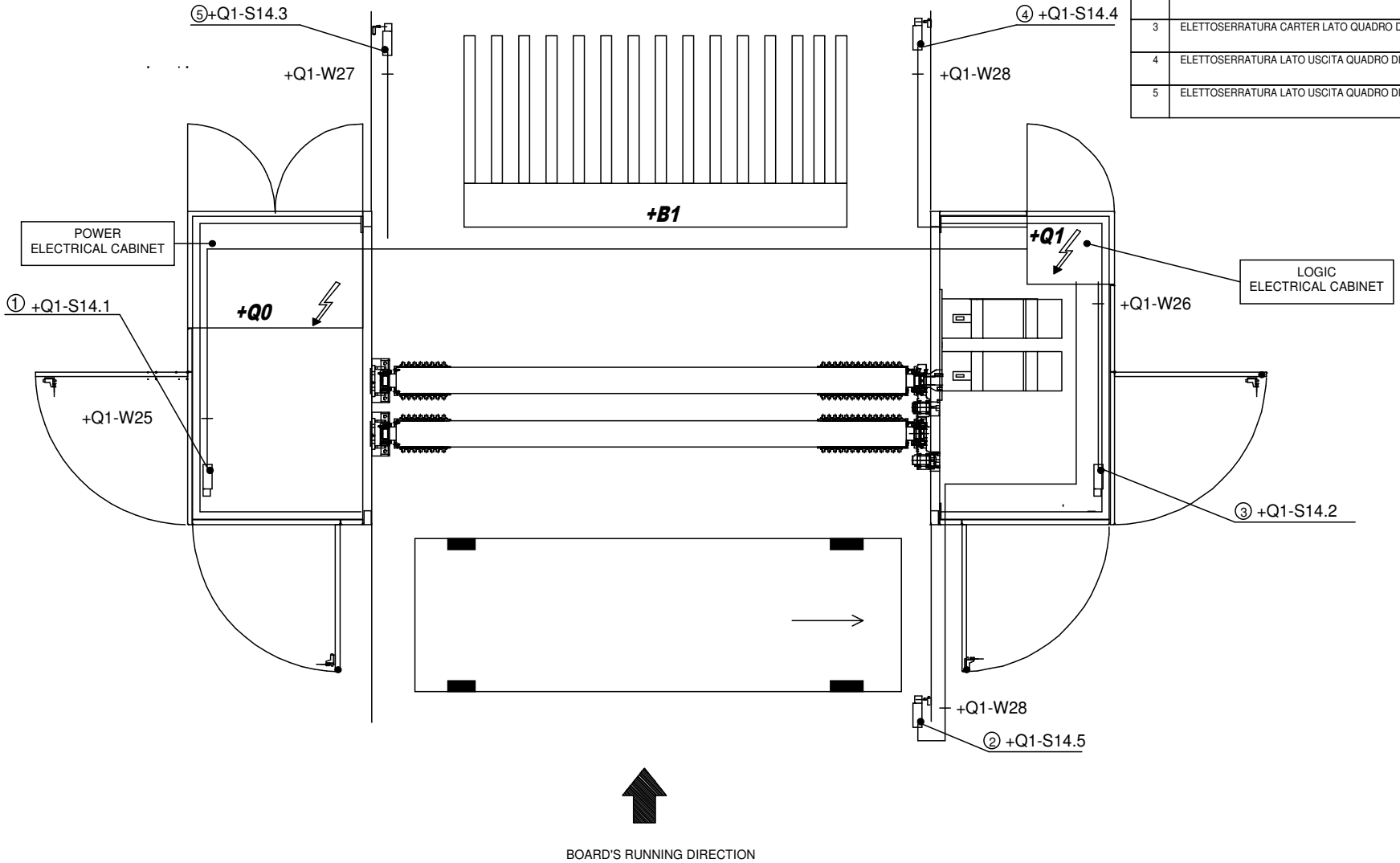

FOSBER S.p.A.
via Provinciale per Camaiore, 27/28 55060 Monsagrati (Lucca) - ITALIA
T. +39.0583.3891 - F. +39.0583.389205/385567
E-mail: info@fosber.it

TWIN 400 T.1
LAY-OUT MACCHINA
LAY-OUT MAQUINA

customer	CORRUGADORA GUATEMA	REL	L.CENTI	28/06/17	issued	28/06/2017
job nr.	4607	REV			proj. sect.	=TW4+N0
serial nr.	COM17279	DEF			page	4 of 14

DEVICE NET NETWORK CONFIGURATION

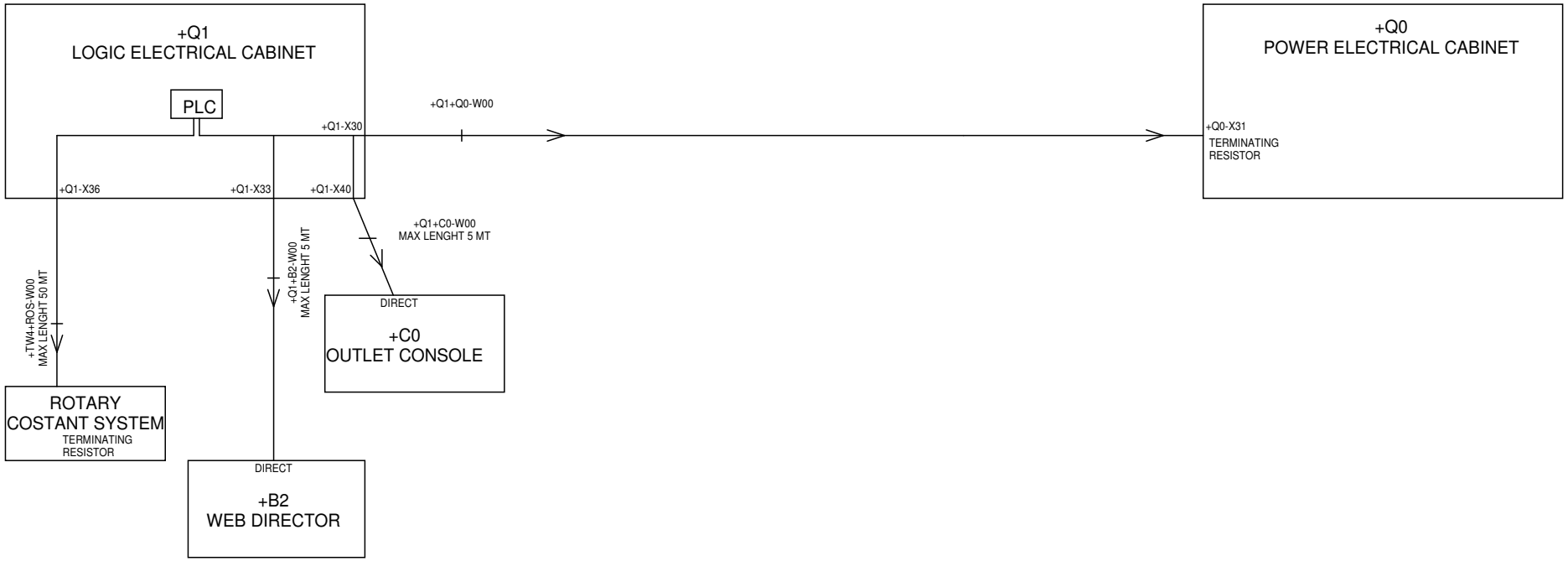

SPEED NETWORK 500 KBPS
MAX TRUNK LENGHT (THICK) 100 MT
DROP LENGHT MAX. 6 MT

FOSBER S.p.A.
via Provinciale per Camaiore, 27/28 55060 Monsagrati (Lucca) - ITALIA
T. +39.0583.3891 - F. +39.0583.389205/385567
E-mail: info@fosber.it

TWIN 400 T.1
SCHEMA A BLOCCHI DEVICE NET
ESQUEMA DE BLOQUES DEVICE NET

customer	CORRUGADORA GUATEMA	REL	L.CENTI	28/06/17	issued	28/06/2017
job nr.	4607	REV			proj. sect.	=TW4+N0
serial nr.	COM17279	DEF			page	5 of 14

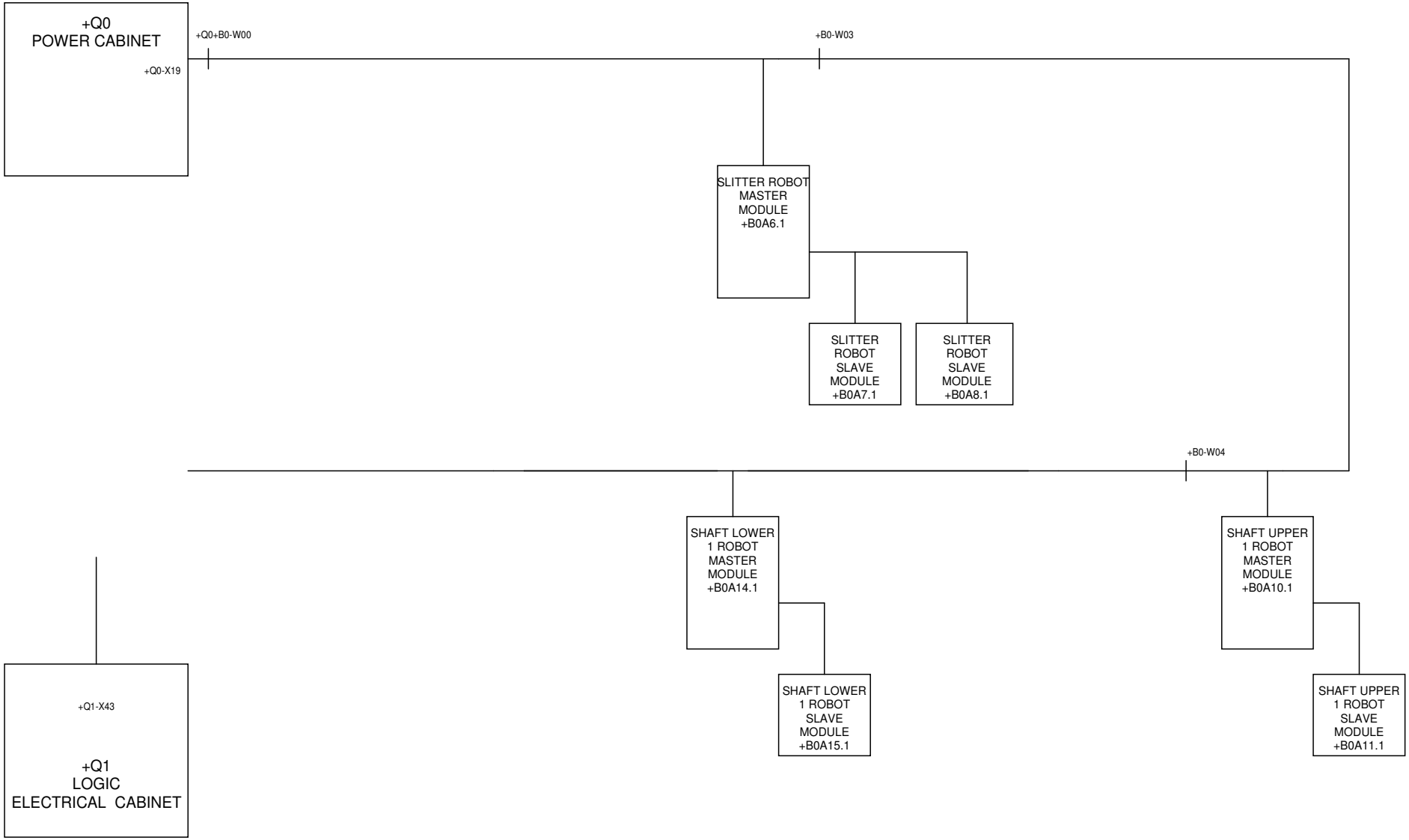

FOSBER S.p.A.
via Provinciale per Camaiore, 27/28 55060 Monsagrati (Lucca) - ITALIA
T. +39.0583.3891 - F. +39.0583.389205/385567
E-mail: info@fosber.it

TWIN 400 T.1
SCHEMA A BLOCCHI CAN OPEN
ESQUEMA DE BLOQUES CAN OPEN

customer	**CORRUGADORA GUATEMA**	REL	**L.CENTI**	**28/06/17**	issued	**28/06/2017**
job nr.	**4607**	REV			proj. sect.	**=TW4+N0**
serial nr.	**COM17279**	DEF			page	**6 of 14**

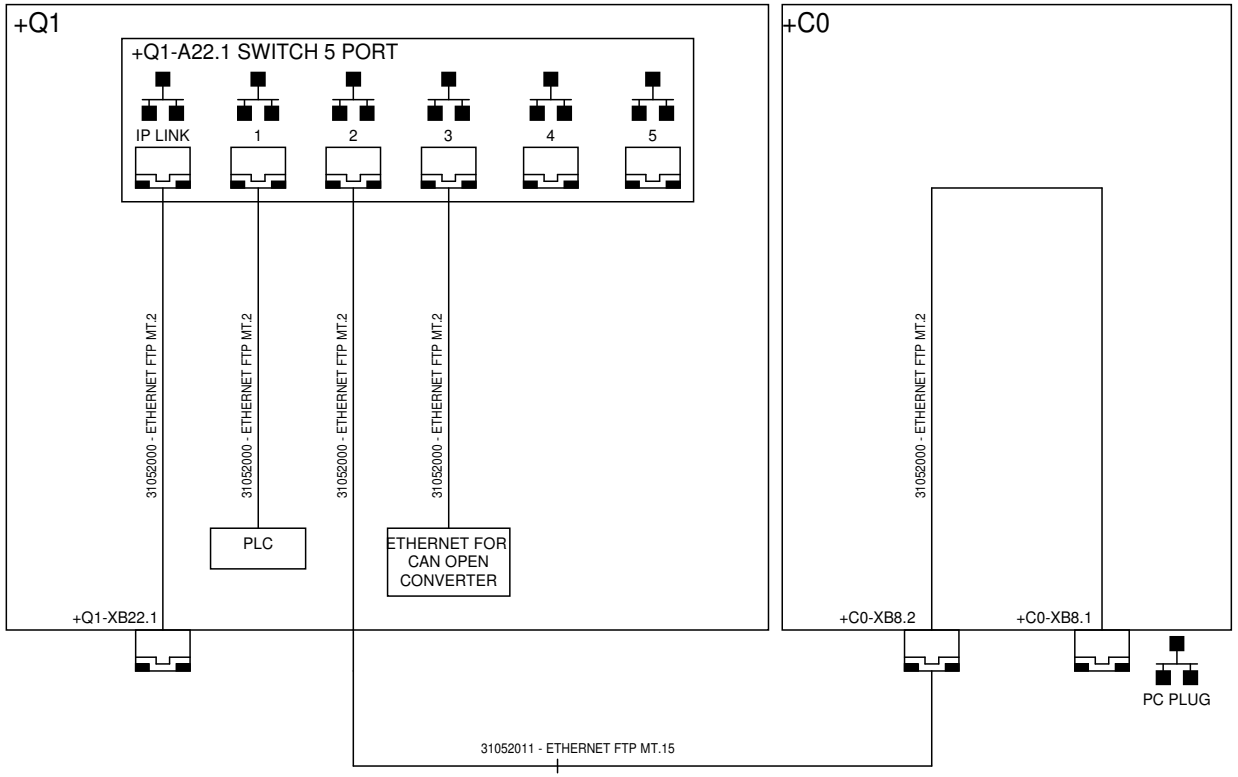

ETHERNET CONFIGURATION

FOSBER S.p.A.
via Provinciale per Camaiore, 27/28 55060 Monsagrati (Lucca) - ITALIA
T. +39.0583.3891 - F. +39.0583.389205/385567
E-mail: info@fosber.it

TWIN 400 T.1
SCHEMA A BLOCCHI ETHERNET
ESQUEMA DE BLOQUES ETHERNET

customer	**CORRUGADORA GUATEMA**	REL	**L.CENTI**	**28/06/17**	issued	**28/06/2017**
job nr.	**4607**	REV			proj. sect.	**=TW4+N0**
serial nr.	**COM17279**	DEF			page	**7 of 14**

FOSBER S.p.A.
via Provinciale per Camaiore, 27/28 55060 Monsagrati (Lucca) - ITALIA
T. +39.0583.3891 - F. +39.0583.389205/385567
E-mail: info@fosber.it

TWIN 400 T.1

PAGINA VUOTA
PÁGINA VACÍA

customer	**CORRUGADORA GUATEMA**	REL	**L.CENTI**	**28/06/17**	issued	**28/06/2017**
job nr.	**4607**	REV			proj. sect.	**=TW4+N0**
serial nr.	**COM17279**	DEF			page	**8 of 14**

FOSBER S.p.A.
via Provinciale per Camaiore, 27/28 55060 Monsagrati (Lucca) - ITALIA
T. +39.0583.3891 - F. +39.0583.389205/385567
E-mail: info@fosber.it

TWIN 400 T.1
PAGINA VUOTA
PAGINA VACIA

customer	**CORRUGADORA GUATEMA**	REL	**L.CENTI**	**28/06/17**	issued	**28/06/2017**
job nr.	**4607**	REV			proj. sect.	**=TW4+N0**
serial nr.	**COM17279**	DEF			page	**9 of 14**

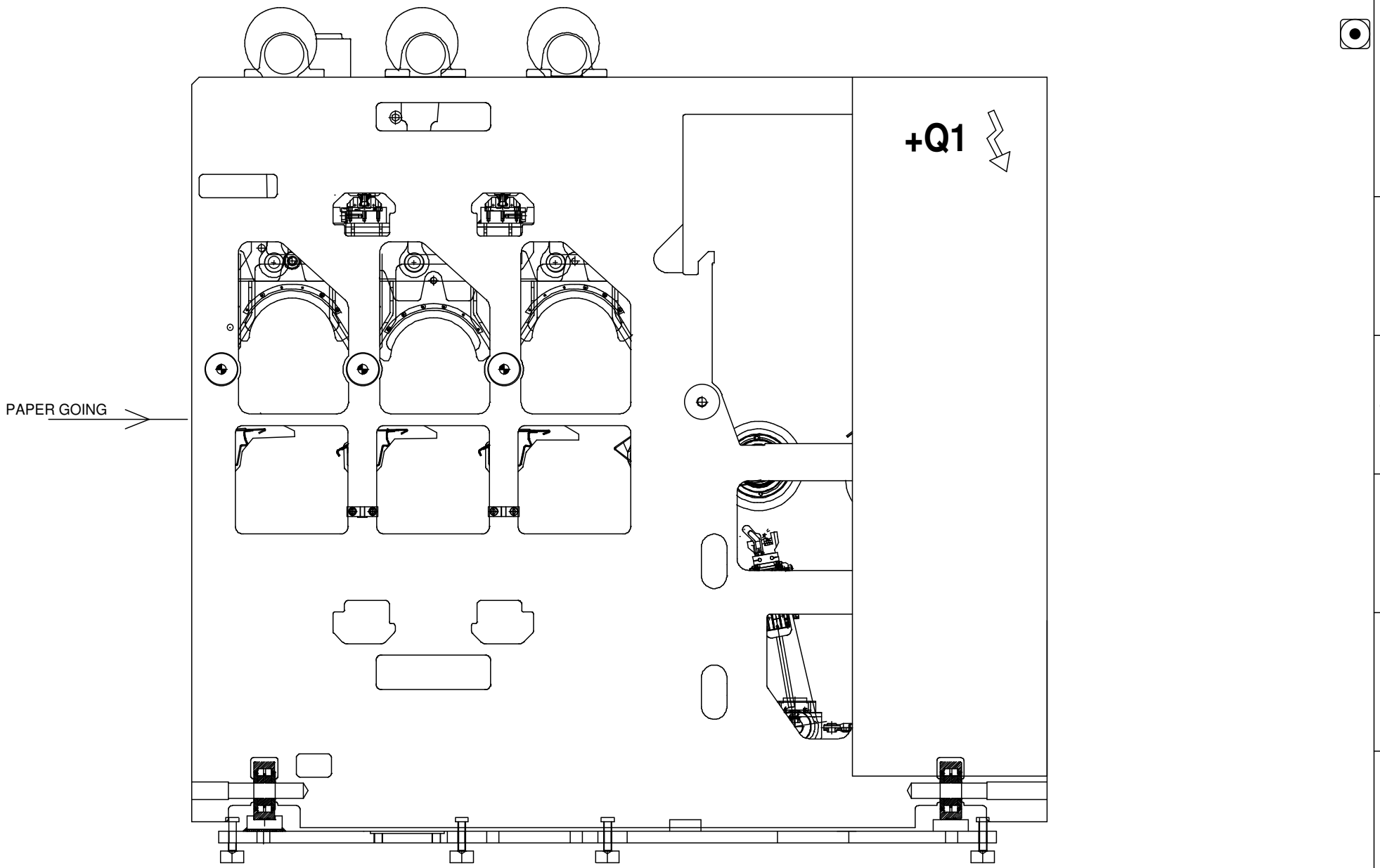

FOSBER S.p.A.
via Provinciale per Camaiore, 27/28 55060 Monsagrati (Lucca) - ITALIA
T. +39.0583.3891 - F. +39.0583.389205/385567
E-mail: info@fosber.it

TWIN 400 T.1
VISTA LATERALE LATO MOTORI
VISTA LATERAL LADO MOTORES

customer	**CORRUGADORA GUATEMA**	REL	**L.CENTI**	**28/06/17**	issued	**28/06/2017**
job nr.	**4607**	REV			proj. sect.	**=TW4+N0**
serial nr.	**COM17279**	DEF			page	**10 of 14**

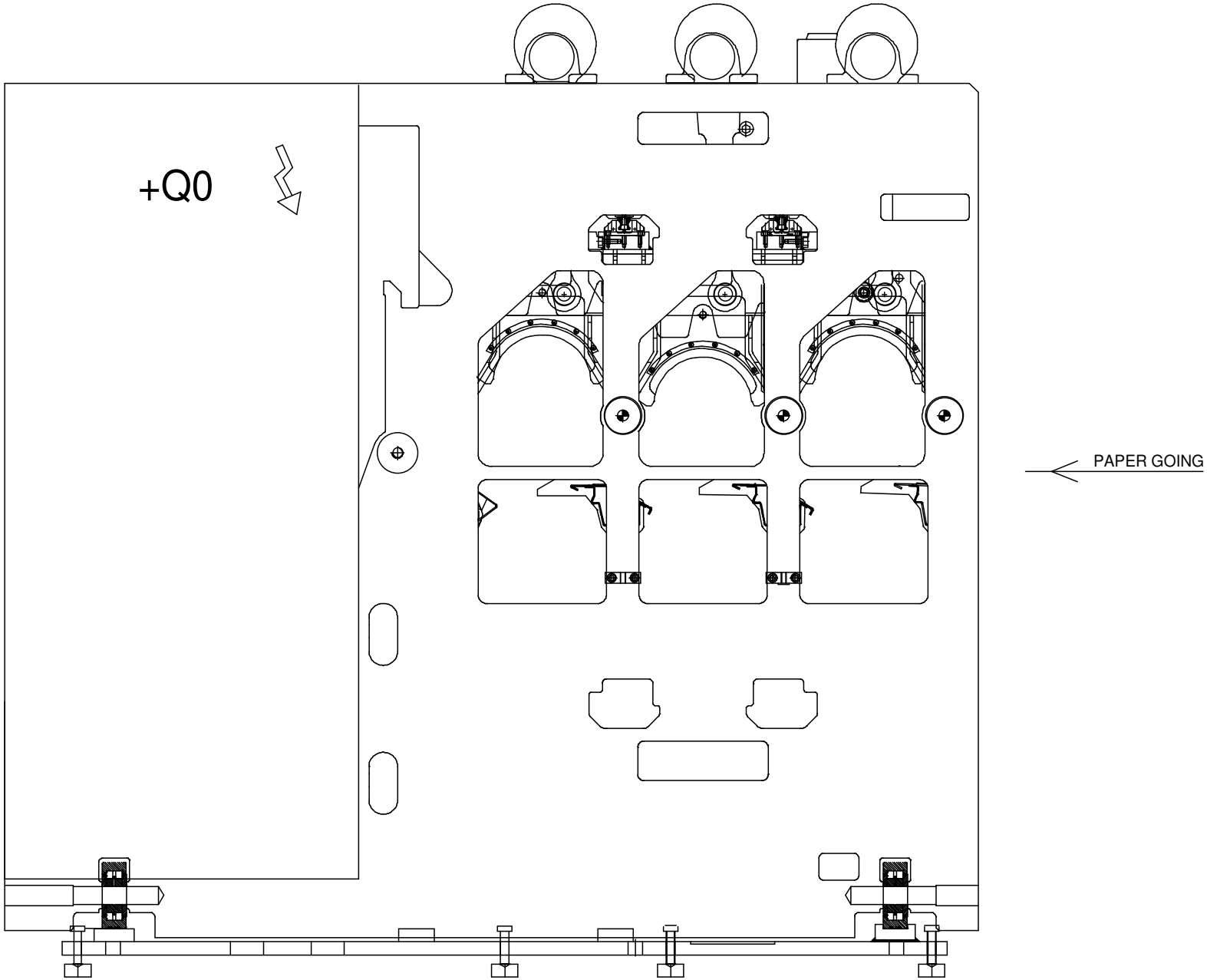

FOSBER S.p.A.
via Provinciale per Camaiore, 27/28 55060 Monsagrati (Lucca) - ITALIA
T. +39.0583.3891 - F. +39.0583.389205/385567
E-mail: info@fosber.it

TWIN 400 T.1
VISTA LATERALE LATO SMONTAGGIO
VISTA LATERAL LADO DESMONTAJE

customer	**CORRUGADORA GUATEMA**	REL	**L.CENTI**	**28/06/17**	issued	**28/06/2017**
job nr.	**4607**	REV			proj. sect.	**=TW4+N0**
serial nr.	**COM17279**	DEF			page	**11 of 14**

ROBOT BLADE

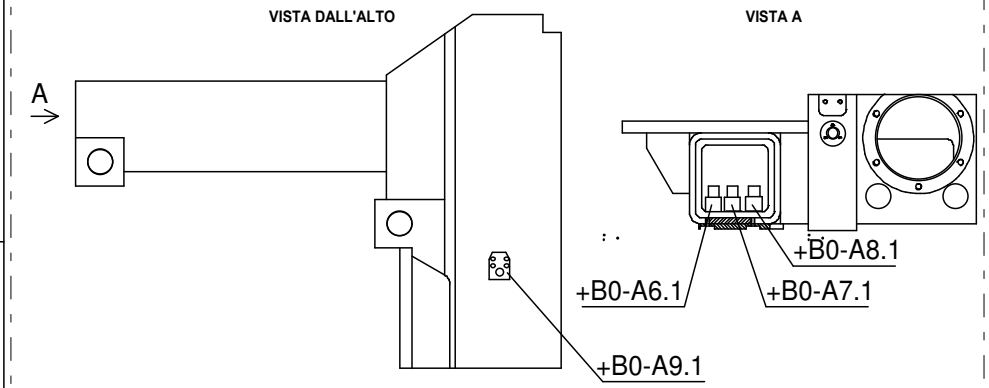

LOWER ROBOT SCORES 1

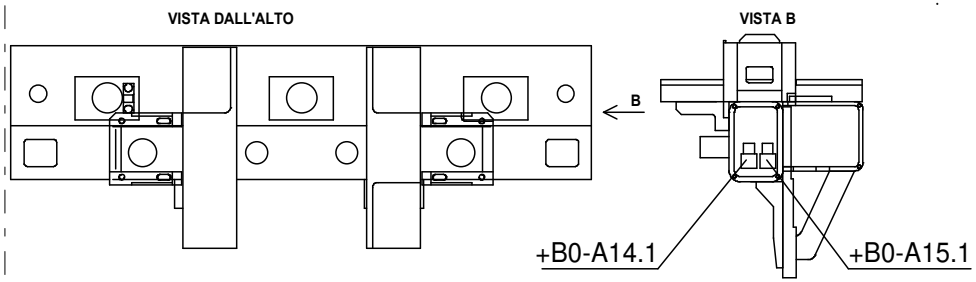

UPPER ROBOT SCORES 1

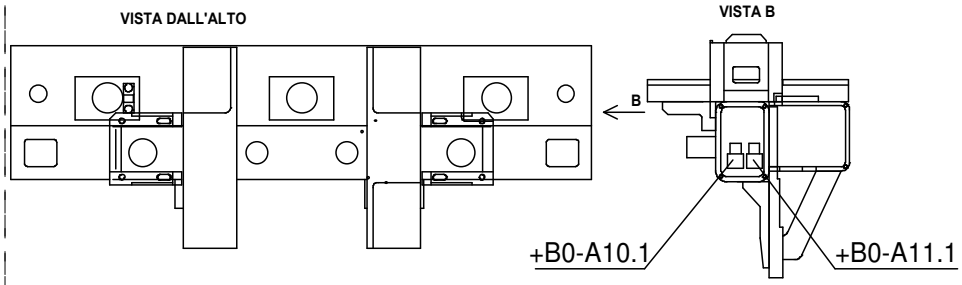

LOWER ROBOT SCORES 2

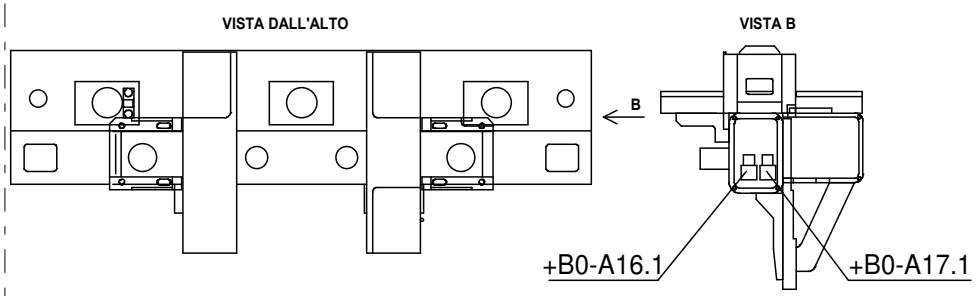

UPPER ROBOT SCORES 2

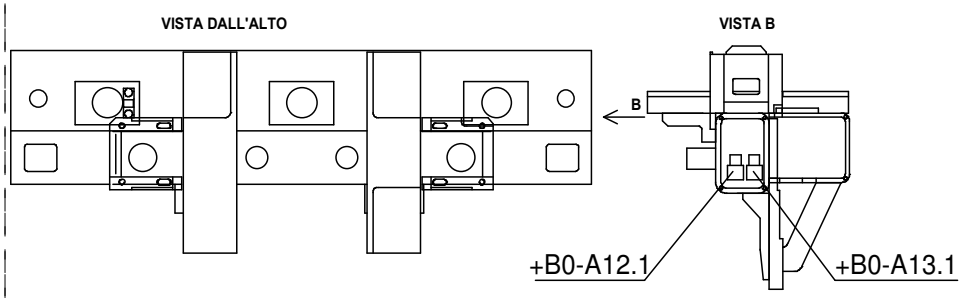

Fosber

FOSBER S.p.A.
via Provinciale per Camaiore, 27/28 55060 Monsagrati (Lucca) - ITALIA
T. +39.0583.3891 - F. +39.0583.389205/385567
E-mail: info@fosber.it

TWIN 400 T.1
CARRI ROBOT
CARROS ROBOT

customer	CORRUGADORA GUATEMA	REL	L.CENTI	28/06/17	issued	28/06/2017
job nr.	4607	REV			proj. sect.	=TW4-X0.11
serial nr.	COM17279	DEF			page	12 of 14

1	SEZIONE SCHEMA ELETTRICO	8	PAGINA VUOTA
2	PAGINA LASCIATA VUOTA	9	PAGINA VUOTA
3	LAY-OUT DISPOSIZIONE MACCHINA	10	VISTA LATERALE LATO MOTORI
4	LAY-OUT MACCHINA	11	VISTA LATERALE LATO SMONTAGGIO
5	SCHEMA A BLOCCHI DEVICE NET	12	CARRI ROBOT
6	SCHEMA A BLOCCHI CAN OPEN	13	INDICE SCHEMA ELETTRICO
7	SCHEMA A BLOCCHI ETHERNET	14	INDICE SCHEMA ELETTRICO

1	SECCIÓN ESQUEMA ELÉCTRICO	8	PAG. INTENCIONADAMENTE EN BLANCO
2	PAG. DEJADA EN BLANCO INTENCIO.	9	PAG. INTENCIONADAMENTE EN BLANCO
3	LAY-OUT DISPOSICIÓN MÁQUINA	10	VISTA LATERAL LADO MOTORES
4	LAY-OUT MÁQUINA	11	VISTA LATERAL LADO DESMONTAJE
5	ESQUEMA DE BLOQUES DEVICE NET	12	CARROS ROBOT
6	ESQUEMA DE BLOQUES CAN OPEN	13	ÍNDICE ESQUEMA ELÉCTRICO
7	ESQUEMA DE BLOQUES ETHERNET	14	ÍNDICE ESQUEMA ELÉCTRICO

REF.	CODE	DESCRIZIONE (I)	DESCRIPTION (UK)	DESCRIPCIÓN (S)	DESCRIPTION (F)	BESCHREIBUNG (D)	N #
+Q0-XS3.2	31270106	PRESA MULTIP. 2P+T 16A BIANCA*	MULTIPLE SOCKET V. OVA 92025	ENCHUFE V. OVA 92025	PRISE OVA 92025	MEHRFACHSTECKERB. OVA 92025	1
+Q0-QS3.1	32365614	INTER.MAGN.NZMH2-A160 160A *	SWITCH NZMH2-A160 160A *	INTERRUPTOR MAGNETOTERMICO NZM	INTERRUPTEUR MAGNETOTERMIQUE N	MAGNETISCHER SCHALTER NZMH2-A1	1
+Q0-QS3.1	32365678	NZM2-160-XKC MORS.A MANTELLO	NZM2-160-XKC TERMINAL BLOCK CO	NZM2-160-XKC BORN.A MANTEL	NZM2-160-XKC BORNE CUIRASS.	NZM2-160-XKC MANTELKLEMME	6
+Q0-QS3.1	32365683	KIT COM. DI RINVIO NZM2-XS-L *	KIT RETURN COM. NZM2-XS-L *	CAJA DE MONTAJE COM. DE TRANSM	KIT COM. DE RENVOI NZM2-XS-L *	SATZ UMLENK. NZM2-XS-L *	1
+Q0-QS3.1	32365686	PROLUNGA NZM1/2-XV4 400MM MAX*	NZM1/2-XV4 400MM MAX* EXTENSIO	ELEMENTO DE PROLONGACION NZM1/	RALLONGE NZM1/2-XV4 400MM MAXI	VERL. NZM1/2-XV4 400MM MAX*	1
+Q0-QS3.1	32365697	BOBINA SGANCI NZM2/3-XUHIV24AC	UNDERVOLTAGE TRIP COIL NZM2/3	BOBINA DE DESENGANCHE NZM2/3-X	BOBINE DECLENCHEMENT NZM2/3-XU	ELEKTROSPULE NZM2/3-XUHIV24AC	1
+Q0-QS3.1	32365702	PROTEZIONE NZM2-XIPK PER NZM2	NZM2-XIPK GUARD FOR NZM2	PROTECCION NZM2-XIPK PARA NZM2	PROTECTION NZM2-XIPK POUR NZM2	SCHUTZV. NZM2-XIPK F. NZM2	2
+Q0-QS3.1	32365707	MANIGLIA NERA NZM1/2-XTDMV	BLACK HANDLE NZM1/2-XTDMV	MANILLA NZM1/2-XTDMV	POIGNEE NZM1/2-XTDMV	GRIFF NZM1/2-XTDMV	1
+Q0-QS3.1	32402000	LUCCHETTO TIPO YALE 110.30 D.5	LOCK YALE 110 30 DIAM5	CANDADO YALE 110 30 DIAM5	SERRURE YALE 110 30 DIAM5	SCHLOSS YALE 110 30 D5	1
+Q0-QS3.1	32402010	GANASCE DI BLOCCAGGIO MM25 *	JAW MM25	MORDAZAS DE BLOQUEO MM25 *	MACHOIRES DE BLOCAGE 25MM *	SPANNBACKE 25 MM *	1
+Q0-Q3.2	32368538	MTERM.PKZM0-4-T	MAGNETOTHERMAL SWITCHPKZM0-4-T	INTERRUPTOR MAGNETOTERMICOPKZM	INTERRUPTEUR MAGNETO-TERMIQUEP	SCHUTZSCHALTERPKZM0-4-T	1
+Q0-EL3.1	32400061	***STAFFA+PLAF.FLOUR.15W 220V*	BRACKET AND LAMP FLOUR. 15W 22	ESTRIBO Y LAMPARA FLOUR. 15W 2	ETRIER ET LAMPE FLOUR. 15W 220	BUEGEL UN LAMPEN FLOUR. 15W 22	1
+Q0-EL3.2	32400061	***STAFFA+PLAF.FLOUR.15W 220V*	BRACKET AND LAMP FLOUR. 15W 22	ESTRIBO Y LAMPARA FLOUR. 15W 2	ETRIER ET LAMPE FLOUR. 15W 220	BUEGEL UN LAMPEN FLOUR. 15W 22	1
+Q0-T3.1	39032014	TRA.400-415-440-460V 1250VA*	400-415-440-460V 1250VA TRANSF	TRANSFORMATOR 400-415-440-460V	TRASFORMATEUR 400-415-440-460V	TRANSFORMATOR 400-415-440-460V	1
+Q0-A3.1	51080475	FILTRO FIN 538.M1500.S1.100.V*	FILTER FIN 538.M1500.S1.100.V	FILTRO FIN 538.M1500.S1.100.V	FILTRE FIN 538.M1500.S1.100.V	FILTER FIN 538.M1500.S1.100.V	1
+Q0-A3.2	51080359	FILTRO FINMOTOR 230SP.001 M	FILTER FINMOTOR 230SP.001 M	FILTRO FINMOTOR 230SP.001 M	FILTRE FINMOTOR 230SP.001 M	FILTER FINMOTOR 230SP.001 M	1
+Q0-Q3.3	35014036	MTERM FAZ-C6/2	MAGNETOTHERMAL SWITCH FAZ-C6/2	INTERRUPTOR MAGNETOTERMICO FAZ	INTERRUPTEUR MAGNETO-TERMIQUE	SCHUTZSCHALTER FAZ-C6/2	1
+Q0-Q3.3	35014090	BLOCCO DIFFER. PBSM-402/003-A	DIFFER. BLOCK PBSM-402/003-A	BLOQUEO DIFER. PBSM-402/003-A	BLOC DIFFER. PBSM-402/003-A	FEHLERSTROMB. PBSM-402/003-A	1
+Q0-T4.1	39031991	TR.400-415-440-460V/230 2KVA *	TRANSFORMER 400-415-440-460V/2	TRANSFORMATOR 400-415-440-460V	TRASFORMATEUR 400-415-440-460V	TRANSFORMATOR 400-415-440-460V	1
+Q0-K4.1	32300900	RELÈ A-B 700-HLT2Z24 TBS24 VDC	RELAYS 700-HLT2Z24 TBS24 VDC	RELE 700-HLT2Z24 TBS24 VDC	RELAYS 700-HLT2Z24 TBS24 VDC	RELAIS 700-HLT2Z24 TBS24 VDC	1
+Q0-Q4.3	35014005	MTERM FAZ-C4/1	MAGNETOTHERMAL SWITCH FAZ-C4/1	INTERRUPTOR MAGNETOTERMICO FAZ	INTERRUPTEUR MAGNETO-TERMIQUE	SCHUTZSCHALTER FAZ-C4/1	1
+Q0-Q4.4	35014006	MTERM FAZ-C6/1	MAGNETOTHERMAL SWITCH FAZ-C6/1	INTERRUPTOR MAGNETOTERMICO FAZ	INTERRUPTEUR MAGNETO-TERMIQUE	SCHUTZSCHALTER FAZ-C6/1	1
+Q0-Q4.1	32368518	MTERM. PKZM0-4 $	MAGNETOTHERMAL SWITCH PKZM0-4	INTERRUPTOR MAGNETOTERMICO PKZ	INTERRUPTEUR MAGNETO-TERMIQUE	SCHUTZSCHALTER PKZM0-4	1
+Q0-Q4.1	32368550	CONTATTI NHI11-PKZ0	CONN. NHI11-PKZM0	CONTACTO NHI11-PKZM0	CONTACTS NHI11-PKZM0	KONTAKTE NHI11-PKZM0	1
+Q0-Q4.2	32368539	MTERM.PKZM0-6,3-T	MAGNETOTHERMAL SWITCHPKZM0-6,3	INTERRUPTOR MAGNETOTERMICOPKZM	INTERRUPTEUR MAGNETO-TERMIQUEP	SCHUTZSCHALTERPKZM0-6,3-T	1
+Q0-M4.1	36540244	COND. RITTAL SK 3304.540 *	RITTAL SK 3304.540 CONDITION	ACOND. RITTAL SK 3304.540	COND. RITTAL SK 3304.540	KLIMAG. RITTAL SK 3304.540 *	1
+Q0-GS4.1	51080176	ALIM. S8VK-G12024 OMRON *	POWER SUPPLY S8VK-G12024 OMRON	ALIMENTADOR S8VK-G12024 OMRON	ALIMENTATEUR S8VK-G12024 OMRON	NETZGERAET S8VK-G12024 OMRON	1
+Q0-Q5.1	32050199	MTERM. PKZM4-40 *	MAGNETOTHERMAL SWITCH PKZM4-40	INTERRUPTOR MAGNETOTERMICO PKZ	INTERRUPTEUR MAGNETO-TERMIQUE	SCHUTZSCHALTER PKZM4-40	1

Fosber

FOSBER S.p.A.
via Provinciale per Camaiore, 27/28 55060 Monsagrati (Lucca) - ITALIA
T. +39.0583.3891 - F. +39.0583.389205/385567
E-mail: info@fosber.it

TWIN 400 T.1
BILL OF MATERIAL

customer	**CORRUGADORA GUATEMA**	REL	**L.CENTI**	**28/06/17**	issued	**29/06/2017**
job nr.	**4607**	REV			proj. sect.	**=TW4+P0**
serial nr.	**COM17279**	DEF			page	**1 of 14**

REF.	CODE	DESCRIZIONE (I)	DESCRIPTION (UK)	DESCRIPCIÓN (S)	DESCRIPTION (F)	BESCHREIBUNG (D)	N #
+Q0-Q5.1	32050205	HB-PKZ4 CLAMP COVER SET *	HB-PKZ4 CLAMP COVER SET *	HB-PKZ4 CLAMP COVER SET *	HB-PKZ4 CLAMP COVER SET *	HB-PKZ4 CLAMP COVER SET *	2
+Q0-Q5.1	32368550	CONTATTI NHI11-PKZ0	CONN. NHI11-PKZM0	CONTACTO NHI11-PKZM0	CONTACTS NHI11-PKZM0	KONTAKTE NHI11-PKZM0	1
+Q0-L5.1	51010789	IMP. TRIFASE 0.88MH IN 35 A *	IMP. TRIPHASE 0.88MH IN 35 A	IMP. TRIFASICA 0.88MH IN 35 A	IMP. TRIPHASE 0.88MH IN 35 A	DREIPH. IMP. 0.88MH IN 35 A *	1
+Q0-K5.1	32060050	DILM150(230V 50HZ) *	CONTACT DILM150(230V 50HZ)	CONTACTO DILM150(230V 50HZ)	CONTACT DILM150(230V 50HZ)	KONTAKTE DILM150(230V 50HZ)	1
+Q0-K5.1	32060051	DILM150-XIP2X COVER SET *	DILM150-XIP2X COVER SET	DILM150-XIP2X COVER SET	DILM150-XIP2X COUVERTURE MIS	DILM150-XIP2X ABZUDECKEN	6
+Q0-K5.1	32060150	CONTATTI DILM1000-XHI11-SI	CONTACT DILM1000-XHI11-SI	CONTACTO DILM1000-XHI11-SI	CONTACT DILM1000-XHI11-SI	KONTAKTE DILM1000-XHI11-SI	2
+Q0-A5.1	51060398	MOD.ALIM. EMB9342-E 14KW 26A *	POWER SUPPLY EMB9342-E 14KW 26	MOD.ALIM. EMB9342-E 14KW 26A *	MOD.ALIM. EMB9342-E 14KW 26A *	MOD.NEZT. EMB9342-E 14KW 26A *	1
+Q0-K5.3	32060050	DILM150(230V 50HZ) *	CONTACT DILM150(230V 50HZ)	CONTACTO DILM150(230V 50HZ)	CONTACT DILM150(230V 50HZ)	KONTAKTE DILM150(230V 50HZ)	1
+Q0-K5.3	32060051	DILM150-XIP2X COVER SET *	DILM150-XIP2X COVER SET	DILM150-XIP2X COVER SET	DILM150-XIP2X COUVERTURE MIS	DILM150-XIP2X ABZUDECKEN	6
+Q0-K5.3	32060150	CONTATTI DILM1000-XHI11-SI	CONTACT DILM1000-XHI11-SI	CONTACTO DILM1000-XHI11-SI	CONTACT DILM1000-XHI11-SI	KONTAKTE DILM1000-XHI11-SI	2
+Q0-Q6.1	32368520	MTERM. PKZM0-6,3 $	MAGNETOTHERMAL SWITCH PKZM0-6,	INTERRUPTOR MAGNETOTERMICO PKZ	INTERRUPTEUR MAGNETO-TERMIQUE	SCHUTZSCHALTER PKZM0-6,3	1
+Q0-Q6.1	32368550	CONTATTI NHI11-PKZ0	CONN. NHI11-PKZM0	CONTACTO NHI11-PKZM0	CONTACTS NHI11-PKZM0	KONTAKTE NHI11-PKZM0	1
+Q0-Q6.2	32368514	MTERM. PKZM0-1,6 $	MAGNETOTHERMAL SWITCH PKZM0-1,	INTERRUPTOR MAGNETOTERMICO PKZ	INTERRUPTEUR MAGNETO-TERMIQUE	SCHUTZSCHALTER PKZM0-1,6	1
+Q0-Q6.2	32368550	CONTATTI NHI11-PKZ0	CONN. NHI11-PKZM0	CONTACTO NHI11-PKZM0	CONTACTS NHI11-PKZM0	KONTAKTE NHI11-PKZM0	1
+Q0-Q6.3	32368516	MTERM. PKZM0-2,5 $	MAGNETOTHERMAL SWITCH PKZM0-2,	INTERRUPTOR MAGNETOTERMICO PKZ	INTERRUPTEUR MAGNETO-TERMIQUE	SCHUTZSCHALTER PKZM0-2,5	1
+Q0-Q6.3	32368550	CONTATTI NHI11-PKZ0	CONN. NHI11-PKZM0	CONTACTO NHI11-PKZM0	CONTACTS NHI11-PKZM0	KONTAKTE NHI11-PKZM0	1
+Q0-K6.3	32060002	DILM9-10 (24VDC)	CONTACT DILM9-10 (24VDC)	CONTACTO DILM9-10 (24VDC)	CONTACT DILM9-10 (24VDC)	KONTAKTE DILM9-10 (24VDC)	1
+Q0-K6.4	32060006	DILM17-10 (RDC24)	CONTACT DILM17-10 (RDC24)	CONTACTO DILM17-10 (RDC24)	CONTACT DILM17-10 (RDC24)	KONTAKTE DILM17-10 (RDC24)	1
+Q0-K6.5	32060006	DILM17-10 (RDC24)	CONTACT DILM17-10 (RDC24)	CONTACTO DILM17-10 (RDC24)	CONTACT DILM17-10 (RDC24)	KONTAKTE DILM17-10 (RDC24)	1
+Q0-K6.1	32060006	DILM17-10 (RDC24)	CONTACT DILM17-10 (RDC24)	CONTACTO DILM17-10 (RDC24)	CONTACT DILM17-10 (RDC24)	KONTAKTE DILM17-10 (RDC24)	1
+Q0-K6.2	32060002	DILM9-10 (24VDC)	CONTACT DILM9-10 (24VDC)	CONTACTO DILM9-10 (24VDC)	CONTACT DILM9-10 (24VDC)	KONTAKTE DILM9-10 (24VDC)	1
+Q0-P7.1	2700642001	FLANGIA FISSAGGIO LENZE9323-24	"LENZE 9323" FIXING FLANGE	BRIDA DE FIJADO "LENZE 9323"	BRIDE FIXATION "LENZE 9323"	BEFESTIGUNGSFLANSCH "LENZE 932	1
+Q0-A7.1	51060112	MOD. ASSE 9323-ET LENZE 1,5KW*	9323-ET LENZE 1,5KW AXIS MODUL	MODULO ARBOL 9323-ET LENZE 1,5	MODULE AXE 9323-ET LENZE 1,5KW	ACHSENMODUL 9323-ET LENZE 1,5K	1
+Q0-FU7.1	35070754	FUSIBILE AQS-F 14X51 12A *	FUSE AQS-F 14X51 12A (GR)*	FUSIBLE AQS-F 14X51 12A (GR)*	FUSIBLE AQS-F 14X51 12A (GR)*	SCHMELZSICHERUNG AQS-F 14X51 1	2
+Q0-FU7.1	35070771	PORTAFUSIBILE WEBER BCH 2X51 *	FUSE HOLDER WEBER BCH 2X51 *	SOPORTE FUSIBLE WEBER BCH 2X51	PORTE-FUS. WEBER BCH 2X51 *	SICHER.-HALTER WEBER BCH 2X51	1
+Q0-P8.1	2700642001	FLANGIA FISSAGGIO LENZE9323-24	"LENZE 9323" FIXING FLANGE	BRIDA DE FIJADO "LENZE 9323"	BRIDE FIXATION "LENZE 9323"	BEFESTIGUNGSFLANSCH "LENZE 932	1
+Q0-FU8.1	35070754	FUSIBILE AQS-F 14X51 12A *	FUSE AQS-F 14X51 12A (GR)*	FUSIBLE AQS-F 14X51 12A (GR)*	FUSIBLE AQS-F 14X51 12A (GR)*	SCHMELZSICHERUNG AQS-F 14X51 1	2
+Q0-FU8.1	35070771	PORTAFUSIBILE WEBER BCH 2X51 *	FUSE HOLDER WEBER BCH 2X51 *	SOPORTE FUSIBLE WEBER BCH 2X51	PORTE-FUS. WEBER BCH 2X51 *	SICHER.-HALTER WEBER BCH 2X51	1

Fosber
FOSBER S.p.A.
via Provinciale per Camaiore, 27/28 55060 Monsagrati (Lucca) - ITALIA
T. +39.0583.3891 - F. +39.0583.389205/385567
E-mail: info@fosber.it

TWIN 400 T.1
BILL OF MATERIAL

customer	CORRUGADORA GUATEMA	REL	L.CENTI	28/06/17	issued	29/06/2017
job nr.	4607	REV			proj. sect.	=TW4+P0
serial nr.	COM17279	DEF			page	2 of 14

REF.	CODE	DESCRIZIONE (I)	DESCRIPTION (UK)	DESCRIPCIÓN (S)	DESCRIPTION (F)	BESCHREIBUNG (D)	N #
+Q0-A8.1	51060112	MOD. ASSE 9323-ET LENZE 1,5KW*	9323-ET LENZE 1,5KW AXIS MODUL	MODULO ARBOL 9323-ET LENZE 1,5	MODULE AXE 9323-ET LENZE 1,5KW	ACHSENMODUL 9323-ET LENZE 1,5K	1
+Q0-P10.1	2700642001	FLANGIA FISSAGGIO LENZE9323-24	"LENZE 9323" FIXING FLANGE	BRIDA DE FIJADO "LENZE 9323"	BRIDE FIXATION "LENZE 9323"	BEFESTIGUNGSFLANSCH "LENZE 932	1
+Q0-FU10.1	35070754	FUSIBILE AQS-F 14X51 12A *	FUSE AQS-F 14X51 12A (GR)*	FUSIBLE AQS-F 14X51 12A (GR)*	FUSIBLE AQS-F 14X51 12A (GR)*	SCHMELZSICHERUNG AQS-F 14X51 1	2
+Q0-FU10.1	35070771	PORTAFUSIBILE WEBER BCH 2X51 *	FUSE HOLDER WEBER BCH 2X51 *	SOPORTE FUSIBLE WEBER BCH 2X51	PORTE-FUS. WEBER BCH 2X51 *	SICHER.-HALTER WEBER BCH 2X51	1
+Q0-A10.1	51060112	MOD. ASSE 9323-ET LENZE 1,5KW*	9323-ET LENZE 1,5KW AXIS MODUL	MODULO ARBOL 9323-ET LENZE 1,5	MODULE AXE 9323-ET LENZE 1,5KW	ACHSENMODUL 9323-ET LENZE 1,5K	1
+Q0-P12.1	2700642001	FLANGIA FISSAGGIO LENZE9323-24	"LENZE 9323" FIXING FLANGE	BRIDA DE FIJADO "LENZE 9323"	BRIDE FIXATION "LENZE 9323"	BEFESTIGUNGSFLANSCH "LENZE 932	1
+Q0-A12.1	51060110	MOD.ASSE EVS9323EP LENZE 1,5KW	AXIS MODULE 9323-EP LENZE 1,5K	MODULO ARBOL 9323-EP LENZE 1,5	MODULE AXE 9323-EP LENZE 1,5KW	ACHSENMODUL 9323-EP LENZE 1,5K	1
-V12.1	50070660	DIODO 1N4007	DIODE 1N4007	DIODO 1N4007	DIODE 1N4007	DIODE 1N4007	1
+Q0-K12.1	32300900	RELÈ A-B 700-HLT2Z24 TBS24 VDC	RELAYS 700-HLT2Z24 TBS24 VDC	RELE 700-HLT2Z24 TBS24 VDC	RELAYS 700-HLT2Z24 TBS24 VDC	RELAIS 700-HLT2Z24 TBS24 VDC	1
+Q0-Q12.1	35014003	MTERM FAZ-C2/1	MAGNETOTHERMAL SWITCH FAZ-C2/1	INTERRUPTOR MAGNETOTERMICO FAZ	INTERRUPTEUR MAGNETO-TERMIQUE	SCHUTZSCHALTER FAZ-C2/1	1
+Q0-Q12.1	35014095	CONT. AUX MOELLER ZP-IHK	AUXILIARY CONTACT ZP-IHK	CONTACTO AUXILIAR ZP-IHK	CONTACTE AUXILIARE ZP-IHK	HILFSKONTAKT ZP-IHK	1
+Q0-FU12.1	35070754	FUSIBILE AQS-F 14X51 12A *	FUSE AQS-F 14X51 12A (GR)*	FUSIBLE AQS-F 14X51 12A (GR)*	FUSIBLE AQS-F 14X51 12A (GR)*	SCHMELZSICHERUNG AQS-F 14X51 1	2
+Q0-FU12.1	35070771	PORTAFUSIBILE WEBER BCH 2X51 *	FUSE HOLDER WEBER BCH 2X51 *	SOPORTE FUSIBLE WEBER BCH 2X51	PORTE-FUS. WEBER BCH 2X51 *	SICHER.-HALTER WEBER BCH 2X51	1
+Q0-P13.1	2700642001	FLANGIA FISSAGGIO LENZE9323-24	"LENZE 9323" FIXING FLANGE	BRIDA DE FIJADO "LENZE 9323"	BRIDE FIXATION "LENZE 9323"	BEFESTIGUNGSFLANSCH "LENZE 932	1
+Q0-A13.1	51060110	MOD.ASSE EVS9323EP LENZE 1,5KW	AXIS MODULE 9323-EP LENZE 1,5K	MODULO ARBOL 9323-EP LENZE 1,5	MODULE AXE 9323-EP LENZE 1,5KW	ACHSENMODUL 9323-EP LENZE 1,5K	1
-V13.1	50070660	DIODO 1N4007	DIODE 1N4007	DIODO 1N4007	DIODE 1N4007	DIODE 1N4007	1
+Q0-K13.1	32300900	RELÈ A-B 700-HLT2Z24 TBS24 VDC	RELAYS 700-HLT2Z24 TBS24 VDC	RELE 700-HLT2Z24 TBS24 VDC	RELAYS 700-HLT2Z24 TBS24 VDC	RELAIS 700-HLT2Z24 TBS24 VDC	1
+Q0-Q13.1	35014003	MTERM FAZ-C2/1	MAGNETOTHERMAL SWITCH FAZ-C2/1	INTERRUPTOR MAGNETOTERMICO FAZ	INTERRUPTEUR MAGNETO-TERMIQUE	SCHUTZSCHALTER FAZ-C2/1	1
+Q0-Q13.1	35014095	CONT. AUX MOELLER ZP-IHK	AUXILIARY CONTACT ZP-IHK	CONTACTO AUXILIAR ZP-IHK	CONTACTE AUXILIARE ZP-IHK	HILFSKONTAKT ZP-IHK	1
+Q0-FU13.1	35070754	FUSIBILE AQS-F 14X51 12A *	FUSE AQS-F 14X51 12A (GR)*	FUSIBLE AQS-F 14X51 12A (GR)*	FUSIBLE AQS-F 14X51 12A (GR)*	SCHMELZSICHERUNG AQS-F 14X51 1	2
+Q0-FU13.1	35070771	PORTAFUSIBILE WEBER BCH 2X51 *	FUSE HOLDER WEBER BCH 2X51 *	SOPORTE FUSIBLE WEBER BCH 2X51	PORTE-FUS. WEBER BCH 2X51 *	SICHER.-HALTER WEBER BCH 2X51	1
+Q0-A16.1	51070200	MOD.ASSE ESMD371L4TXA 0,37 KW*	ESMD371L4 0,37 KW AXIS MODUL	MODULO ARBOL ESMD371L4 0,37 KW	MODULE AXE ESMD371L4 0,37 KW	ACHSENMODUL ESMD371L4 0,37 KW	1
+Q0-K16.1	32300900	RELÈ A-B 700-HLT2Z24 TBS24 VDC	RELAYS 700-HLT2Z24 TBS24 VDC	RELE 700-HLT2Z24 TBS24 VDC	RELAYS 700-HLT2Z24 TBS24 VDC	RELAIS 700-HLT2Z24 TBS24 VDC	1
+Q0-Q16.1	32368520	MTERM. PKZM0-6,3 $	MAGNETOTHERMAL SWITCH PKZM0-6,	INTERRUPTOR MAGNETOTERMICO PKZ	INTERRUPTEUR MAGNETO-TERMIQUE	SCHUTZSCHALTER PKZM0-6,3	1
+Q0-Q16.1	32368550	CONTATTI NHI11-PKZ0	CONN. NHI11-PKZM0	CONTACTO NHI11-PKZM0	CONTACTS NHI11-PKZM0	KONTAKTE NHI11-PKZM0	1
+Q0-A17.1	51060136	MOD. ASSE 9328-EV LENZE 22KW*	AXIS MODULE 9328-EV LENZE 22K	MODULO ARBOL 9328-EV LENZE 22	MODULE AXE 9328-EV LENZE 22K	ACHSENMODUL 9328-EV LENZE 22K	1
+Q0-Q17.1	32050200	MTERM. PKZM4-50 *	MAGNETOTHERMAL SWITCH PKZM4-50	INTERRUPTOR MAGNETOTERMICO PKZ	INTERRUPTEUR MAGNETO-TERMIQUE	SCHUTZSCHALTER PKZM4-50	1
+Q0-Q17.1	32050205	HB-PKZ4 CLAMP COVER SET *	HB-PKZ4 CLAMP COVER SET *	HB-PKZ4 CLAMP COVER SET *	HB-PKZ4 CLAMP COVER SET *	HB-PKZ4 CLAMP COVER SET *	2

Fosber
FOSBER S.p.A.
via Provinciale per Camaiore, 27/28 55060 Monsagrati (Lucca) - ITALIA
T. +39.0583.3891 - F. +39.0583.389205/385567
E-mail: info@fosber.it

TWIN 400 T.1
BILL OF MATERIAL

customer	CORRUGADORA GUATEMA	REL	L.CENTI	28/06/17	issued	29/06/2017
job nr.	4607	REV			proj. sect.	=TW4+P0
serial nr.	COM17279	DEF			page	3 of 14

REF.	CODE	DESCRIZIONE (I)	DESCRIPTION (UK)	DESCRIPCIÓN (S)	DESCRIPTION (F)	BESCHREIBUNG (D)	N #
+Q0-Q17.1	32368550	CONTATTI NHI11-PKZ0	CONN. NHI11-PKZM0	CONTACTO NHI11-PKZM0	CONTACTS NHI11-PKZM0	KONTAKTE NHI11-PKZM0	1
+Q0-L17.1	51010781	IMP. TRIFASE 0.75MH IN 45 A *	IMP. TRIPHASE 0.75MH IN 45 A	IMP. TRIFASICA 0.75MH IN 45 A	IMP. TRIPHASE 0.75MH IN 45 A	DREIPH. IMP. 0.75MH IN 45 A *	1
+Q0-R17.1	51060200	CHOPPER FRENATURA EMB-9352-E	BRAKING CHOPPER EMB-9352-E	FRENO EMB-9352-E	CHOPPER EMB-9352-E	BREMS-CHOPPER EMB-9352-E	1
+Q0-Q17.2	32368512	MTERM. PKZM0-1 $	MAGNETOTHERMAL SWITCH PKZM0-1	INTERRUPTOR MAGNETOTERMICO PKZ	INTERRUPTEUR MAGNETO-TERMIQUE	SCHUTZSCHALTER PKZM0-1	1
+Q0-Q17.2	32368550	CONTATTI NHI11-PKZ0	CONN. NHI11-PKZM0	CONTACTO NHI11-PKZM0	CONTACTS NHI11-PKZM0	KONTAKTE NHI11-PKZM0	1
+Q0-K17.1	32060002	DILM9-10 (24VDC)	CONTACT DILM9-10 (24VDC)	CONTACTO DILM9-10 (24VDC)	CONTACT DILM9-10 (24VDC)	KONTAKTE DILM9-10 (24VDC)	1
+Q0-FU17.5	35070766	FUSIBILE AQS-F 22X58 50A *	FUSE AQS-F 22X58 50A (GR)*	FUSIBLE AQS-F 22X58 50A (GR)*	FUSIBLE AQS-F 22X58 50A (GR)*	SCHMELZSICHERUNG AQS-F 22X58 5	2
+Q0-FU17.5	35070772	PORTAFUSIBILE WEBER BCH 2X58 *	FUSE HOLDER WEBER BCH 2X58 *	SOPORTE FUSIBLE WEBER BCH 2X58	PORTE-FUSIBLE WEBER BCH 2X58 *	SICHER.-HALTER WEBER BCH 2X58	1
+Q0-R17.2	51060237	RES.FR. 24 OHM 4000 W	BRAKE RESISTOR 24 OHM 4000 W	RESISTENCIA 24 OHM 4000 W	RESISTANCE 24 OHM 4000 W	BREMSWIDERSTAND 24 OHM 4000 W	1
+Q0-A18.1	51060136	MOD. ASSE 9328-EV LENZE 22KW*	AXIS MODULE 9328-EV LENZE 22K	MODULO ARBOL 9328-EV LENZE 22	MODULE AXE 9328-EV LENZE 22K	ACHSENMODUL 9328-EV LENZE 22K	1
+Q0-Q18.1	32050200	MTERM. PKZM4-50 *	MAGNETOTHERMAL SWITCH PKZM4-50	INTERRUPTOR MAGNETOTERMICO PKZ	INTERRUPTEUR MAGNETO-TERMIQUE	SCHUTZSCHALTER PKZM4-50	1
+Q0-Q18.1	32050205	HB-PKZ4 CLAMP COVER SET *	HB-PKZ4 CLAMP COVER SET *	HB-PKZ4 CLAMP COVER SET *	HB-PKZ4 CLAMP COVER SET *	HB-PKZ4 CLAMP COVER SET *	2
+Q0-Q18.1	32368550	CONTATTI NHI11-PKZ0	CONN. NHI11-PKZM0	CONTACTO NHI11-PKZM0	CONTACTS NHI11-PKZM0	KONTAKTE NHI11-PKZM0	1
+Q0-L18.1	51010781	IMP. TRIFASE 0.75MH IN 45 A *	IMP. TRIPHASE 0.75MH IN 45 A	IMP. TRIFASICA 0.75MH IN 45 A	IMP. TRIPHASE 0.75MH IN 45 A	DREIPH. IMP. 0.75MH IN 45 A *	1
+Q0-R18.1	51060200	CHOPPER FRENATURA EMB-9352-E	BRAKING CHOPPER EMB-9352-E	FRENO EMB-9352-E	CHOPPER EMB-9352-E	BREMS-CHOPPER EMB-9352-E	1
+Q0-K18.1	32060002	DILM9-10 (24VDC)	CONTACT DILM9-10 (24VDC)	CONTACTO DILM9-10 (24VDC)	CONTACT DILM9-10 (24VDC)	KONTAKTE DILM9-10 (24VDC)	1
+Q0-Q18.2	32368512	MTERM. PKZM0-1 $	MAGNETOTHERMAL SWITCH PKZM0-1	INTERRUPTOR MAGNETOTERMICO PKZ	INTERRUPTEUR MAGNETO-TERMIQUE	SCHUTZSCHALTER PKZM0-1	1
+Q0-Q18.2	32368550	CONTATTI NHI11-PKZ0	CONN. NHI11-PKZM0	CONTACTO NHI11-PKZM0	CONTACTS NHI11-PKZM0	KONTAKTE NHI11-PKZM0	1
+Q0-FU18.5	35070766	FUSIBILE AQS-F 22X58 50A *	FUSE AQS-F 22X58 50A (GR)*	FUSIBLE AQS-F 22X58 50A (GR)*	FUSIBLE AQS-F 22X58 50A (GR)*	SCHMELZSICHERUNG AQS-F 22X58 5	2
+Q0-FU18.5	35070772	PORTAFUSIBILE WEBER BCH 2X58 *	FUSE HOLDER WEBER BCH 2X58 *	SOPORTE FUSIBLE WEBER BCH 2X58	PORTE-FUSIBLE WEBER BCH 2X58 *	SICHER.-HALTER WEBER BCH 2X58	1
+Q0-R18.2	51060237	RES.FR. 24 OHM 4000 W	BRAKE RESISTOR 24 OHM 4000 W	RESISTENCIA 24 OHM 4000 W	RESISTANCE 24 OHM 4000 W	BREMSWIDERSTAND 24 OHM 4000 W	1
+Q0-K20.3	32300900	RELÈ A-B 700-HLT2Z24 TBS24 VDC	RELAYS 700-HLT2Z24 TBS24 VDC	RELE 700-HLT2Z24 TBS24 VDC	RELAYS 700-HLT2Z24 TBS24 VDC	RELAIS 700-HLT2Z24 TBS24 VDC	1
+Q0-A20.1	51060041	INTERF.DEVICE-NET 2179IB******	INTERFACE DEVICE-NET 2179IB*	INTERFAZ DEVICE-NET 2179IB*	INTERFACE DEVICE-NET 2179IB*	SCHNITTSTELLE DEVICE-NET 2179I	1
+Q0-K20.2	32300900	RELÈ A-B 700-HLT2Z24 TBS24 VDC	RELAYS 700-HLT2Z24 TBS24 VDC	RELE 700-HLT2Z24 TBS24 VDC	RELAYS 700-HLT2Z24 TBS24 VDC	RELAIS 700-HLT2Z24 TBS24 VDC	1
+Q0-K20.1	32300945	RELE WEID. TOZ 24VDC DC2A *	RELAYS WEIDMULLER TOZ 24VDCDC2	RELE WEIDMULLER TOZ 24VDCDC2A	RELAYS WEIDMULLER TOZ 24VDCDC2	RELAIS WEIDMULLER TOZ 24VDCDC2	1
+Q0-A22.1	51060041	INTERF.DEVICE-NET 2179IB******	INTERFACE DEVICE-NET 2179IB*	INTERFAZ DEVICE-NET 2179IB*	INTERFACE DEVICE-NET 2179IB*	SCHNITTSTELLE DEVICE-NET 2179I	1
+Q0-A24.1	51060041	INTERF.DEVICE-NET 2179IB******	INTERFACE DEVICE-NET 2179IB*	INTERFAZ DEVICE-NET 2179IB*	INTERFACE DEVICE-NET 2179IB*	SCHNITTSTELLE DEVICE-NET 2179I	1
+Q0-K26.1	32300900	RELÈ A-B 700-HLT2Z24 TBS24 VDC	RELAYS 700-HLT2Z24 TBS24 VDC	RELE 700-HLT2Z24 TBS24 VDC	RELAYS 700-HLT2Z24 TBS24 VDC	RELAIS 700-HLT2Z24 TBS24 VDC	1

Fosber
FOSBER S.p.A.
via Provinciale per Camaiore, 27/28 55060 Monsagrati (Lucca) - ITALIA
T. +39.0583.3891 - F. +39.0583.389205/385567
E-mail: info@fosber.it

TWIN 400 T.1
BILL OF MATERIAL

customer	CORRUGADORA GUATEMA	REL	L.CENTI	28/06/17	issued	29/06/2017
job nr.	4607	REV			proj. sect.	=TW4+P0
serial nr.	COM17279	DEF			page	4 of 14

REF.	CODE	DESCRIZIONE (I)	DESCRIPTION (UK)	DESCRIPCIÓN (S)	DESCRIPTION (F)	BESCHREIBUNG (D)	N #
+Q0-A26.1	51060041	INTERF.DEVICE-NET 2179IB******	INTERFACE DEVICE-NET 2179IB*	INTERFAZ DEVICE-NET 2179IB*	INTERFACE DEVICE-NET 2179IB*	SCHNITTSTELLE DEVICE-NET 2179I	1
+Q0-K28.1	32300900	RELÈ A-B 700-HLT2Z24 TBS24 VDC	RELAYS 700-HLT2Z24 TBS24 VDC	RELE 700-HLT2Z24 TBS24 VDC	RELAYS 700-HLT2Z24 TBS24 VDC	RELAIS 700-HLT2Z24 TBS24 VDC	1
+Q0-A28.1	51060041	INTERF.DEVICE-NET 2179IB******	INTERFACE DEVICE-NET 2179IB*	INTERFAZ DEVICE-NET 2179IB*	INTERFACE DEVICE-NET 2179IB*	SCHNITTSTELLE DEVICE-NET 2179I	1
+Q0-K35.1	32300900	RELÈ A-B 700-HLT2Z24 TBS24 VDC	RELAYS 700-HLT2Z24 TBS24 VDC	RELE 700-HLT2Z24 TBS24 VDC	RELAYS 700-HLT2Z24 TBS24 VDC	RELAIS 700-HLT2Z24 TBS24 VDC	1
+Q0-K35.2	32300900	RELÈ A-B 700-HLT2Z24 TBS24 VDC	RELAYS 700-HLT2Z24 TBS24 VDC	RELE 700-HLT2Z24 TBS24 VDC	RELAYS 700-HLT2Z24 TBS24 VDC	RELAIS 700-HLT2Z24 TBS24 VDC	1
+Q0-K35.3	32300900	RELÈ A-B 700-HLT2Z24 TBS24 VDC	RELAYS 700-HLT2Z24 TBS24 VDC	RELE 700-HLT2Z24 TBS24 VDC	RELAYS 700-HLT2Z24 TBS24 VDC	RELAIS 700-HLT2Z24 TBS24 VDC	1
+Q0-K36.1	32300900	RELÈ A-B 700-HLT2Z24 TBS24 VDC	RELAYS 700-HLT2Z24 TBS24 VDC	RELE 700-HLT2Z24 TBS24 VDC	RELAYS 700-HLT2Z24 TBS24 VDC	RELAIS 700-HLT2Z24 TBS24 VDC	1
+Q0-K36.2	32300900	RELÈ A-B 700-HLT2Z24 TBS24 VDC	RELAYS 700-HLT2Z24 TBS24 VDC	RELE 700-HLT2Z24 TBS24 VDC	RELAYS 700-HLT2Z24 TBS24 VDC	RELAIS 700-HLT2Z24 TBS24 VDC	1
+Q0-K36.3	32300900	RELÈ A-B 700-HLT2Z24 TBS24 VDC	RELAYS 700-HLT2Z24 TBS24 VDC	RELE 700-HLT2Z24 TBS24 VDC	RELAYS 700-HLT2Z24 TBS24 VDC	RELAIS 700-HLT2Z24 TBS24 VDC	1
+Q0-P38.1	36520890	TERMOSTATO RITTAL SK3110	THERMOSTAT RITTAL SK3110	TERMOSTATO RITTAL SK3110	THERMOSTAT RITTAL SK3110	THERMOSTAT RITTAL SK3110	1
+Q0-A38.1	51500519	A-B 1790D-T16BV0 16 IN	A-B 1790D-T16BV0 16 IN *	A-B 1790D-T16BV0 16 IN *	A-B 1790D-T16BV0 16 IN *	A-B 1790D-T16BV0 16 IN *	1
+Q0-SA38.1	32400030	F.C.INTERB. N.O.050FI10 ELFIN	INTERLOCK LIM. SWI.050FI10 ELF	ENCLAVAMIENTO N.O.050FI10 ELFI	FIN DE COURSE N.O.050FI10 ELFI	ENDSCHALTER N.O.050FI10 ELFIN	1
+Q0-SA38.1	32400050	F.C.INTERB. N.C.030FC-P ELFIN	INTERLOCK LIM. SWI.030FC-P ELF	ENCLAVAMIENTO N.C.030FC-P ELFI	FIN DE COURSE N.C.030FC-P ELF	VERBL. ENDSCH. N.C.030FC-P ELF	1
+Q0-A39.1	51500521	A-B 1790-T16BV0X EXP. 16 IN *	A-B 1790-T16BV0X EXP. 16 IN *	A-B 1790-T16BV0X EXP. 16 IN *	A-B 1790-T16BV0X EXP. 16 IN *	A-B 1790-T16BV0X EXP. 16 IN *	1
+Q0-A40.1	51500522	A-B 1790-T0B16X EXP. 16 OUT *	A-B 1790-T0B16X EXP. 16 OUT *	A-B 1790-T0B16X EXP. 16 OUT *	A-B 1790-T0B16X EXP. 16 OUT *	A-B 1790-T0B16X EXP. 16 OUT *	1
+Q0-K40.1	32300900	RELÈ A-B 700-HLT2Z24 TBS24 VDC	RELAYS 700-HLT2Z24 TBS24 VDC	RELE 700-HLT2Z24 TBS24 VDC	RELAYS 700-HLT2Z24 TBS24 VDC	RELAIS 700-HLT2Z24 TBS24 VDC	1
+Q0-K40.2	32300900	RELÈ A-B 700-HLT2Z24 TBS24 VDC	RELAYS 700-HLT2Z24 TBS24 VDC	RELE 700-HLT2Z24 TBS24 VDC	RELAYS 700-HLT2Z24 TBS24 VDC	RELAIS 700-HLT2Z24 TBS24 VDC	1
+Q0-K40.3	32300900	RELÈ A-B 700-HLT2Z24 TBS24 VDC	RELAYS 700-HLT2Z24 TBS24 VDC	RELE 700-HLT2Z24 TBS24 VDC	RELAYS 700-HLT2Z24 TBS24 VDC	RELAIS 700-HLT2Z24 TBS24 VDC	1
+Q0-A41.1	51500522	A-B 1790-T0B16X EXP. 16 OUT *	A-B 1790-T0B16X EXP. 16 OUT *	A-B 1790-T0B16X EXP. 16 OUT *	A-B 1790-T0B16X EXP. 16 OUT *	A-B 1790-T0B16X EXP. 16 OUT *	1
+Q0-K41.1	32300900	RELÈ A-B 700-HLT2Z24 TBS24 VDC	RELAYS 700-HLT2Z24 TBS24 VDC	RELE 700-HLT2Z24 TBS24 VDC	RELAYS 700-HLT2Z24 TBS24 VDC	RELAIS 700-HLT2Z24 TBS24 VDC	1
+Q0-K42.1	32300945	RELE WEID. TOZ 24VDC DC2A *	RELAYS WEIDMULLER TOZ 24VDCDC2	RELE WEIDMULLER TOZ 24VDCDC2A	RELAYS WEIDMULLER TOZ 24VDCDC2	RELAIS WEIDMULLER TOZ 24VDCDC2	1
+Q0-K42.2	32300945	RELE WEID. TOZ 24VDC DC2A *	RELAYS WEIDMULLER TOZ 24VDCDC2	RELE WEIDMULLER TOZ 24VDCDC2A	RELAYS WEIDMULLER TOZ 24VDCDC2	RELAIS WEIDMULLER TOZ 24VDCDC2	1
+Q0-K42.3	32300945	RELE WEID. TOZ 24VDC DC2A *	RELAYS WEIDMULLER TOZ 24VDCDC2	RELE WEIDMULLER TOZ 24VDCDC2A	RELAYS WEIDMULLER TOZ 24VDCDC2	RELAIS WEIDMULLER TOZ 24VDCDC2	1
+Q0-K42.4	32300945	RELE WEID. TOZ 24VDC DC2A *	RELAYS WEIDMULLER TOZ 24VDCDC2	RELE WEIDMULLER TOZ 24VDCDC2A	RELAYS WEIDMULLER TOZ 24VDCDC2	RELAIS WEIDMULLER TOZ 24VDCDC2	1
							3
							3
							3
+Q0-43.5							1

Fosber
FOSBER S.p.A.
via Provinciale per Camaiore, 27/28 55060 Monsagrati (Lucca) - ITALIA
T. +39.0583.3891 - F. +39.0583.389205/385567
E-mail: info@fosber.it

TWIN 400 T.1
BILL OF MATERIAL

customer	CORRUGADORA GUATEMA	REL	L.CENTI	28/06/17	issued	29/06/2017
job nr.	4607	REV			proj. sect.	=TW4+P0
serial nr.	COM17279	DEF			page	5 of 14

REF.	CODE	DESCRIZIONE (I)	DESCRIPTION (UK)	DESCRIPCIÓN (S)	DESCRIPTION (F)	BESCHREIBUNG (D)	N #
+Q0-43.6							3
+Q0-43.6							3
+Q0-43.6							3
+Q0-43.6.2							1
+Q0-43.8							3
+Q0-43.8							3
+Q0-43.8							3
+Q0-43.9.1							1
+Q0-A44.1	51060036	INT.EMF2180IB GATEWAY BUS/ETH*	EMF2180IB LENZE INTERFACE	INTERFAZ EMF2180IB LENZE	INTERF.EMF2180IB LENZE	SCHNITTSTELLE EMF2180IB LENZE	1
+Q0-XB44.1	51295355	CONNETTORE SUBCON-PLUS-CAN *	CONNECTOR SUBCON-PLUS-CAN *	CONECTOR SUBCON-PLUS-CAN *	CONNECTEUR SUBCON-PLUS-CAN *	VERBINDER SUBCON-PLUS-CAN *	1
+Q0-Q45.2	32368520	MTERM. PKZM0-6,3 $	MAGNETOTHERMAL SWITCH PKZM0-6,	INTERRUPTOR MAGNETOTERMICO PK	INTERRUPTEUR MAGNETO-TERMIQUE	SCHUTZSCHALTER PKZM0-6,3	1
+Q0-Q45.1	32368516	MTERM. PKZM0-2,5 $	MAGNETOTHERMAL SWITCH PKZM0-2,	INTERRUPTOR MAGNETOTERMICO PK	INTERRUPTEUR MAGNETO-TERMIQUE	SCHUTZSCHALTER PKZM0-2,5	1
+Q0-SA51.1	32331643	MICROINT.(BL-CA2G)D4B1111 $	MICRO SWITCH (BL-CA2G)D4B1111	MICROINTERRUPTOR (BL-CA2G)D4B1	MICRO-INTERRUPTEUR (BL-CA2G)D4	MIKROSCHALTER (BL-CA2G)D4B1111	1
+Q0-SA51.2	32331643	MICROINT.(BL-CA2G)D4B1111 $	MICRO SWITCH (BL-CA2G)D4B1111	MICROINTERRUPTOR (BL-CA2G)D4B1	MICRO-INTERRUPTEUR (BL-CA2G)D4	MIKROSCHALTER (BL-CA2G)D4B1111	1
+Q0-A51.1	31240630	BOX TB-8M12-4P2-CS12 *	CONNECTION BOX ESCHA 8I/O M23	CAJA CONEXION ESCHA 8I/O M23	BOITE CONNECT. ESCHA 8I/O M23	VERBINDUNG BOX ESCHA 8I/O M23	1
+Q0-A52.1	31240630	BOX TB-8M12-4P2-CS12 *	CONNECTION BOX ESCHA 8I/O M23	CAJA CONEXION ESCHA 8I/O M23	BOITE CONNECT. ESCHA 8I/O M23	VERBINDUNG BOX ESCHA 8I/O M23	1
+Q0-A53.1	51500519	A-B 1790D-T16BV0 16 IN	A-B 1790D-T16BV0 16 IN *	A-B 1790D-T16BV0 16 IN *	A-B 1790D-T16BV0 16 IN *	A-B 1790D-T16BV0 16 IN *	1
+Q0-PE51.1	36080095	BARRA TERRA M5 12X4X990MM *	37389 LEGRAND GROUND BAR	BARRA TIERRA ART.37389 LEGRAND	BARRE ART 37389 LEGRAND	ERDSTANGE ART. 37389 LEGRAND	1
+Q1-XS3.2	31270106	PRESA MULTIP. 2P+T 16A BIANCA*	MULTIPLE SOCKET V. OVA 92025	ENCHUFE V. OVA 92025	PRISE OVA 92025	MEHRFACHSTECKERB. OVA 92025	1
+Q1--EL3.1	32400061	***STAFFA+PLAF.FLOUR.15W 220V*	BRACKET AND LAMP FLOUR. 15W 22	ESTRIBO Y LAMPARA FLOUR. 15W 2	ETRIER ET LAMPE FLOUR. 15W 220	BUEGEL UN LAMPEN FLOUR. 15W 22	1
+Q1-M4.1	36540240	COND. RITTAL SK 3302.100 *	RITTAL SK 3302.100 CONDITIONE	ACOND. RITTAL SK 3302.100	CONDITIONNEUR RITTAL SK 3302.1	KLIMAG. RITTAL SK 3302.100 *	1
+Q1-Q4.3	35014008	MTERM FAZ-C10/1	MAGNETOTHERMAL SWITCH FAZ-C10/	INTERRUPTOR MAGNETOTERMICO FA	INTERRUPTEUR MAGNETO-TERMIQUE	SCHUTZSCHALTER FAZ-C10/1	1
+Q1-Q4.2	32368520	MTERM. PKZM0-6,3 $	MAGNETOTHERMAL SWITCH PKZM0-6,	INTERRUPTOR MAGNETOTERMICO PK	INTERRUPTEUR MAGNETO-TERMIQUE	SCHUTZSCHALTER PKZM0-6,3	1
+Q1-Q4.4	35014067	MTERM FAZ-C6/1-NA *	MAGNETOTHERMAL SWITCH FAZ-C6-N	INTERRUPTOR MAGNETOTERMICO FA	INTERRUPTEUR MAGNETO-TERMIQUE	SCHUTZSCHALTER FAZ-C6-NA	1
+Q1-Q4.5	35014006	MTERM FAZ-C6/1	MAGNETOTHERMAL SWITCH FAZ-C6/1	INTERRUPTOR MAGNETOTERMICO FA	INTERRUPTEUR MAGNETO-TERMIQUE	SCHUTZSCHALTER FAZ-C6/1	1
+Q1-Q4.6	32368520	MTERM. PKZM0-6,3 $	MAGNETOTHERMAL SWITCH PKZM0-6,	INTERRUPTOR MAGNETOTERMICO PK	INTERRUPTEUR MAGNETO-TERMIQUE	SCHUTZSCHALTER PKZM0-6,3	1
+Q1-Q4.7	35014008	MTERM FAZ-C10/1	MAGNETOTHERMAL SWITCH FAZ-C10/	INTERRUPTOR MAGNETOTERMICO FA	INTERRUPTEUR MAGNETO-TERMIQUE	SCHUTZSCHALTER FAZ-C10/1	1
+Q1-Q4.9	35014065	MTERM FAZ-C4/1-NA**********	MAGNETOTHERMAL SWITCH FAZ-C4-N	INTERRUPTOR MAGNETOTERMICO FA	INTERRUPTEUR MAGNETO-TERMIQUE	SCHUTZSCHALTER FAZ-C4-NA	1

Fosber
FOSBER S.p.A.
via Provinciale per Camaiore, 27/28 55060 Monsagrati (Lucca) - ITALIA
T. +39.0583.3891 - F. +39.0583.389205/385567
E-mail: info@fosber.it

TWIN 400 T.1
BILL OF MATERIAL

customer	CORRUGADORA GUATEMA	REL	L.CENTI	28/06/17	issued	29/06/2017
job nr.	4607	REV			proj. sect.	=TW4+P0
serial nr.	COM17279	DEF			page	6 of 14

REF.	CODE	DESCRIZIONE (I)	DESCRIPTION (UK)	DESCRIPCIÓN (S)	DESCRIPTION (F)	BESCHREIBUNG (D)	N #
+Q1-Q4.9	35014096	CONT. AUX MOELLER Z-NHK	AUX CONT.MOELLER Z-NHK	CONT. AUX MOELLER Z-NHK	CONT. AUX MOELLER Z-NHK	HILFSKONT. MOELLER Z-NHK	1
+Q1-Q4.1	35014063	MTERM FAZ-C2/1-NA *	MAGNETOTHERMAL SWITCH FAZ-C2-N	INTERRUPTOR MAGNETOTERMICO FAZ	INTERRUPTEUR MAGNETO-TERMIQUE	SCHUTZSCHALTER FAZ-C2-NA	1
+Q1-Q4.1	35014096	CONT. AUX MOELLER Z-NHK	AUX CONT.MOELLER Z-NHK	CONT. AUX MOELLER Z-NHK	CONT. AUX MOELLER Z-NHK	HILFSKONT. MOELLER Z-NHK	1
+Q1-Q4.8	32368514	MTERM. PKZM0-1,6 $	MAGNETOTHERMAL SWITCH PKZM0-1,	INTERRUPTOR MAGNETOTERMICO PKZ	INTERRUPTEUR MAGNETO-TERMIQUE	SCHUTZSCHALTER PKZM0-1,6	1
+Q1-K4.3	32300900	RELÈ A-B 700-HLT2Z24 TBS24 VDC	RELAYS 700-HLT2Z24 TBS24 VDC	RELE 700-HLT2Z24 TBS24 VDC	RELAYS 700-HLT2Z24 TBS24 VDC	RELAIS 700-HLT2Z24 TBS24 VDC	1
+Q1-GS4.1	51080181	ALIM. S8VK-T24024 OMRON *	POWER SUPPLY S8VK-T24024 OMRON	ALIMENTADOR S8VK-T24024 OMRON	ALIMENTATEUR S8VK-T24024 OMRON	NETZGERAET S8VK-T24024 OMRON	1
+Q1-GS4.2	51080176	ALIM. S8VK-G12024 OMRON *	POWER SUPPLY S8VK-G12024 OMRON	ALIMENTADOR S8VK-G12024 OMRON	ALIMENTATEUR S8VK-G12024 OMRON	NETZGERAET S8VK-G12024 OMRON	1
+Q1-GS4.3	51080181	ALIM. S8VK-T24024 OMRON *	POWER SUPPLY S8VK-T24024 OMRON	ALIMENTADOR S8VK-T24024 OMRON	ALIMENTATEUR S8VK-T24024 OMRON	NETZGERAET S8VK-T24024 OMRON	1
+Q1-A5.7	51500420	A-B 1769-ECR TERMINATORE DX *	A-B 1769-ECR TERMINATORE DX *	A-B 1769-ECR TERMINATORE DX *	A-B 1769-ECR TERMINATORE DX *	A-B 1769-ECR TERMINATORE DX *	1
+Q1-A5.2	51500440	A-B 1769-IQ16 16 INPUT 24VDC *	A-B 1769-IQ16 16 INPUT 24VDC *	MODULO 16 IN.A-B 1769-IQ16 24V	A-B 1769-IQ16 16 INPUT 24VDC *	A-B 1769-IQ16 16 INPUT 24VDC *	1
+Q1-A5.3	51500440	A-B 1769-IQ16 16 INPUT 24VDC *	A-B 1769-IQ16 16 INPUT 24VDC *	MODULO 16 IN.A-B 1769-IQ16 24V	A-B 1769-IQ16 16 INPUT 24VDC *	A-B 1769-IQ16 16 INPUT 24VDC *	1
+Q1-A5.4	51500415	A-B 1769-PA2 ALIM.120/240 2A *	A-B 1769-PA2 ALIM.120/240 2A *	A-B 1769-PA2 120/240 2A ALIM.	A-B 1769-PA2 ALIM.120/240 2A *	A-B 1769-PA2 VERS.120/240 2A *	1
+Q1-A5.5	51500460	A-B 1769-OB16 16 OUTPUT 24VDC*	A-B 1769-OB16 16 OUTPUT 24VDC*	I/O MODULO 16 SALIDAS A-B 1769	A-B 1769-OB16 16 OUTPUT 24VDC*	A-B 1769-OB16 16 OUTPUT 24VDC*	1
+Q1-A5.6	51500460	A-B 1769-OB16 16 OUTPUT 24VDC*	A-B 1769-OB16 16 OUTPUT 24VDC*	I/O MODULO 16 SALIDAS A-B 1769	A-B 1769-OB16 16 OUTPUT 24VDC*	A-B 1769-OB16 16 OUTPUT 24VDC*	1
+Q1-A5.7	51500425	A-B 1769-SDN DEVICE NET SCAN *	A-B 1769-SDN DEVICE NET SCAN *	SCANNER DEVICE NET A-B 1769-SD	A-B 1769-SDN DEVICE NET SCAN *	A-B 1769-SDN DEVICE NET SCAN *	1
+Q1-A5.1	51500405	A-B 1769-L32E CPU SER. B *	A-B CPU 1769-L32E SER. B	CPU A-B 1769-L32E SER. B	A-B CPU 1769-L32E SER. B	A-B CPU 1769-L32E SER. B	1
+Q1-P6.1	36520890	TERMOSTATO RITTAL SK3110	THERMOSTAT RITTAL SK3110	TERMOSTATO RITTAL SK3110	THERMOSTAT RITTAL SK3110	THERMOSTAT RITTAL SK3110	1
+Q1-SA6.1	32400030	F.C.INTERB. N.O.050FI10 ELFIN	INTERLOCK LIM. SWI.050FI10 ELF	ENCLAVAMIENTO N.O.050FI10 ELFI	FIN DE COURSE N.O.050FI10 ELFI	ENDSCHALTER N.O.050FI10 ELFIN	1
+Q1-SA6.1	32400050	F.C.INTERB. N.C.030FC-P ELFIN	INTERLOCK LIM. SWI.030FC-P ELF	ENCLAVAMIENTO N.C.030FC-P ELFI	FIN DE COURSE N.C.030FC-P ELF	VERBL. ENDSCH. N.C.030FC-P ELF	1
+Q1-SA7.1	30800180	SELETTORE CHIAVE 2P ZB4-BG67*	KEY SELECTOR 2P ZB4-BG67*	SELECTOR CLE 2P ZB4-BG67*	SELECTEUR CLE 2P ZB4-BG67*	WAHLER CLE 2P ZB4-BG67*	1
+Q1-SA7.1	30800400	BASE ZB4-BZ009	BASE ZB4-BZ009	BASE ZB4-BZ009	BASE ZB4-BZ009	BASIS ZB4-BZ009	1
+Q1-SA7.1	30800410	CONTATTO N.O.ZBE-101 ZB4	CONN. N.A.ZBE-101	CONTACTO N.A.ZBE-101	CONTACT N.A.ZBE-101	KONTAKTE N.O.ZBE-101 ZB4	1
+Q1-SA7.2	30800180	SELETTORE CHIAVE 2P ZB4-BG67*	KEY SELECTOR 2P ZB4-BG67*	SELECTOR CLE 2P ZB4-BG67*	SELECTEUR CLE 2P ZB4-BG67*	WAHLER CLE 2P ZB4-BG67*	1
+Q1-SA7.2	30800400	BASE ZB4-BZ009	BASE ZB4-BZ009	BASE ZB4-BZ009	BASE ZB4-BZ009	BASIS ZB4-BZ009	1
+Q1-SA7.2	30800410	CONTATTO N.O.ZBE-101 ZB4	CONN. N.A.ZBE-101	CONTACTO N.A.ZBE-101	CONTACT N.A.ZBE-101	KONTAKTE N.O.ZBE-101 ZB4	1
+Q1-K9.1	32300905	RELÈ A-B 700-HLT22Z24 TBR24VDC	RELAYS 700-HLT22Z24 TBR24VDC	RELE 700-HLT22Z24 TBR24VDC	RELAYS 700-HLT22Z24 TBR24VDC	RELAIS 700-HLT22Z24 TBR24VDC	1
+Q1-H9.1	37010400	MODULO LUM.LED ROSSO LU7-E-R *	MODULE LUM.LED RED LU7-E-R	MODULO LUM.LED ROJO LU7-E-R *	MODULE LUM.DEL ROUGE LU7-E-R *	MODUL LEUCHT.LED ROT LU7-E-R *	1
+Q1-H9.2	37010401	MODULO LUM.LED ARAN. LU7-E-Y *	MODULE LUM.LED AMBER LU7-E-Y	MODULO LUM.LED NARAN. LU7-E-Y	MODULE LUM.DEL ORAN. LU7-E-Y *	MODUL LEUCHT. LED ORANGE LU7-E	1

Fosber
FOSBER S.p.A.
via Provinciale per Camaiore, 27/28 55060 Monsagrati (Lucca) - ITALIA
T. +39.0583.3891 - F. +39.0583.389205/385567
E-mail: info@fosber.it

TWIN 400 T.1
BILL OF MATERIAL

customer	CORRUGADORA GUATEMA	REL	L.CENTI	28/06/17	issued	29/06/2017
job nr.	4607	REV			proj. sect.	=TW4+P0
serial nr.	COM17279	DEF			page	7 of 14

REF.	CODE	DESCRIZIONE (I)	DESCRIPTION (UK)	DESCRIPCIÓN (S)	DESCRIPTION (F)	BESCHREIBUNG (D)	N #
+Q1-H9.3	37010402	MODULO LUM.LED VERDE LU7-E-G *	MODULE LUM.LED GREEN LU7-E-G	MODULO LUM.LED VERDE LU7-E-G *	MODULE LUM.DEL VERTE LU7-E-G *	MODUL LEUCHT.LED GRUEN LU7-E-G	1
+Q1-HA9.1	37010405	BASE COL.LUM. LU7-02UFB+FB150*	BASE BECON LU7-02UFB	BASE COLUMNA LUM. LU7-02UFB *	BASE COLONNE LUM. LU7-02UFB *	BASIS LEUCHTS. LU7-02UFB *	1
+Q1-HA9.8	30800530	SEGNALATORE XB5-KSB ACUSTICO *	ACOUSTIC SIGNALLING XB5-KSB *	INDICADOR ACUSTICO XB5-KSB	AVERTISSEUR ACOUSTIQUE XB5-KSB	LEUCHTTASTE XB5-KSB *	1
+Q1-K9.3	32300905	RELÈ A-B 700-HLT22Z24 TBR24VDC	RELAYS 700-HLT22Z24 TBR24VDC	RELE 700-HLT22Z24 TBR24VDC	RELAYS 700-HLT22Z24 TBR24VDC	RELAIS 700-HLT22Z24 TBR24VDC	1
+Q1-K9.2	32300900	RELÈ A-B 700-HLT2Z24 TBS24 VDC	RELAYS 700-HLT2Z24 TBS24 VDC	RELE 700-HLT2Z24 TBS24 VDC	RELAYS 700-HLT2Z24 TBS24 VDC	RELAIS 700-HLT2Z24 TBS24 VDC	1
+Q1-K9.4	32300945	RELE WEID. TOZ 24VDC DC2A *	RELAYS WEIDMULLER TOZ 24VDCDC2	RELE WEIDMULLER TOZ 24VDCDC2A	RELAYS WEIDMULLER TOZ 24VDCDC2	RELAIS WEIDMULLER TOZ 24VDCDC2	1
+Q1-K9.5	32300945	RELE WEID. TOZ 24VDC DC2A *	RELAYS WEIDMULLER TOZ 24VDCDC2	RELE WEIDMULLER TOZ 24VDCDC2A	RELAYS WEIDMULLER TOZ 24VDCDC2	RELAIS WEIDMULLER TOZ 24VDCDC2	1
+Q1-K9.6	32300905	RELÈ A-B 700-HLT22Z24 TBR24VDC	RELAYS 700-HLT22Z24 TBR24VDC	RELE 700-HLT22Z24 TBR24VDC	RELAYS 700-HLT22Z24 TBR24VDC	RELAIS 700-HLT22Z24 TBR24VDC	1
+Q1-K10.2	32300900	RELÈ A-B 700-HLT2Z24 TBS24 VDC	RELAYS 700-HLT2Z24 TBS24 VDC	RELE 700-HLT2Z24 TBS24 VDC	RELAYS 700-HLT2Z24 TBS24 VDC	RELAIS 700-HLT2Z24 TBS24 VDC	1
+Q1-K10.3	32300900	RELÈ A-B 700-HLT2Z24 TBS24 VDC	RELAYS 700-HLT2Z24 TBS24 VDC	RELE 700-HLT2Z24 TBS24 VDC	RELAYS 700-HLT2Z24 TBS24 VDC	RELAIS 700-HLT2Z24 TBS24 VDC	1
+Q1-K10.5	32300900	RELÈ A-B 700-HLT2Z24 TBS24 VDC	RELAYS 700-HLT2Z24 TBS24 VDC	RELE 700-HLT2Z24 TBS24 VDC	RELAYS 700-HLT2Z24 TBS24 VDC	RELAIS 700-HLT2Z24 TBS24 VDC	1
+Q1-K10.6	32300900	RELÈ A-B 700-HLT2Z24 TBS24 VDC	RELAYS 700-HLT2Z24 TBS24 VDC	RELE 700-HLT2Z24 TBS24 VDC	RELAYS 700-HLT2Z24 TBS24 VDC	RELAIS 700-HLT2Z24 TBS24 VDC	1
+Q1-K10.7	32300900	RELÈ A-B 700-HLT2Z24 TBS24 VDC	RELAYS 700-HLT2Z24 TBS24 VDC	RELE 700-HLT2Z24 TBS24 VDC	RELAYS 700-HLT2Z24 TBS24 VDC	RELAIS 700-HLT2Z24 TBS24 VDC	1
+Q1-K10.8	32300900	RELÈ A-B 700-HLT2Z24 TBS24 VDC	RELAYS 700-HLT2Z24 TBS24 VDC	RELE 700-HLT2Z24 TBS24 VDC	RELAYS 700-HLT2Z24 TBS24 VDC	RELAIS 700-HLT2Z24 TBS24 VDC	1
+Q1-K10.9	32300900	RELÈ A-B 700-HLT2Z24 TBS24 VDC	RELAYS 700-HLT2Z24 TBS24 VDC	RELE 700-HLT2Z24 TBS24 VDC	RELAYS 700-HLT2Z24 TBS24 VDC	RELAIS 700-HLT2Z24 TBS24 VDC	1
+Q1-K10.10	32300900	RELÈ A-B 700-HLT2Z24 TBS24 VDC	RELAYS 700-HLT2Z24 TBS24 VDC	RELE 700-HLT2Z24 TBS24 VDC	RELAYS 700-HLT2Z24 TBS24 VDC	RELAIS 700-HLT2Z24 TBS24 VDC	1
+Q1-K10.11	32300900	RELÈ A-B 700-HLT2Z24 TBS24 VDC	RELAYS 700-HLT2Z24 TBS24 VDC	RELE 700-HLT2Z24 TBS24 VDC	RELAYS 700-HLT2Z24 TBS24 VDC	RELAIS 700-HLT2Z24 TBS24 VDC	1
+Q1-K10.4	32300900	RELÈ A-B 700-HLT2Z24 TBS24 VDC	RELAYS 700-HLT2Z24 TBS24 VDC	RELE 700-HLT2Z24 TBS24 VDC	RELAYS 700-HLT2Z24 TBS24 VDC	RELAIS 700-HLT2Z24 TBS24 VDC	1
+Q1-K10.1	32300900	RELÈ A-B 700-HLT2Z24 TBS24 VDC	RELAYS 700-HLT2Z24 TBS24 VDC	RELE 700-HLT2Z24 TBS24 VDC	RELAYS 700-HLT2Z24 TBS24 VDC	RELAIS 700-HLT2Z24 TBS24 VDC	1
+Q1-K10.16	32300900	RELÈ A-B 700-HLT2Z24 TBS24 VDC	RELAYS 700-HLT2Z24 TBS24 VDC	RELE 700-HLT2Z24 TBS24 VDC	RELAYS 700-HLT2Z24 TBS24 VDC	RELAIS 700-HLT2Z24 TBS24 VDC	1
+Q1-K10.12	32300900	RELÈ A-B 700-HLT2Z24 TBS24 VDC	RELAYS 700-HLT2Z24 TBS24 VDC	RELE 700-HLT2Z24 TBS24 VDC	RELAYS 700-HLT2Z24 TBS24 VDC	RELAIS 700-HLT2Z24 TBS24 VDC	1
+Q1-K10.13	32300900	RELÈ A-B 700-HLT2Z24 TBS24 VDC	RELAYS 700-HLT2Z24 TBS24 VDC	RELE 700-HLT2Z24 TBS24 VDC	RELAYS 700-HLT2Z24 TBS24 VDC	RELAIS 700-HLT2Z24 TBS24 VDC	1
+Q1-K10.15	32300905	RELÈ A-B 700-HLT22Z24 TBR24VDC	RELAYS 700-HLT22Z24 TBR24VDC	RELE 700-HLT22Z24 TBR24VDC	RELAYS 700-HLT22Z24 TBR24VDC	RELAIS 700-HLT22Z24 TBR24VDC	1
+Q1-K11.1	32300945	RELE WEID. TOZ 24VDC DC2A *	RELAYS WEIDMULLER TOZ 24VDCDC2	RELE WEIDMULLER TOZ 24VDCDC2A	RELAYS WEIDMULLER TOZ 24VDCDC2	RELAIS WEIDMULLER TOZ 24VDCDC2	1
+Q1-K11.2	32300945	RELE WEID. TOZ 24VDC DC2A *	RELAYS WEIDMULLER TOZ 24VDCDC2	RELE WEIDMULLER TOZ 24VDCDC2A	RELAYS WEIDMULLER TOZ 24VDCDC2	RELAIS WEIDMULLER TOZ 24VDCDC2	1
+Q1-K12.1	32120764	REL.EM.XPS-AV11113 3NO+3NO RIT	REL.EM.XPS-AV11113 3NO+3NO EME	RELE EMERGENCIA XPS-AV11113 3N	RELAIS DEMERGENCE XPS-AV11113	SICHERHEITSRELAIS XPS-AV11113	1
+Q1-SA12.1	30800171	SELETTORE CHIAVE 2P ZB4-BG027*	KEY SELECTOR 2P ZB4-BG027*	SELECTOR CLE 2P ZB4-BG027*	SELECTEUR CLE 2P ZB4-BG027*	WAHLER CLE 2P ZB4-BG027*	1
+Q1-SA12.1	30800400	BASE ZB4-BZ009	BASE ZB4-BZ009	BASE ZB4-BZ009	BASE ZB4-BZ009	BASIS ZB4-BZ009	1

Fosber
FOSBER S.p.A.
via Provinciale per Camaiore, 27/28 55060 Monsagrati (Lucca) - ITALIA
T. +39.0583.3891 - F. +39.0583.389205/385567
E-mail: info@fosber.it

TWIN 400 T.1
BILL OF MATERIAL

customer	CORRUGADORA GUATEMA	REL	L.CENTI	28/06/17	issued	29/06/2017
job nr.	4607	REV			proj. sect.	=TW4+P0
serial nr.	COM17279	DEF			page	8 of 14

REF.	CODE	DESCRIZIONE (I)	DESCRIPTION (UK)	DESCRIPCIÓN (S)	DESCRIPTION (F)	BESCHREIBUNG (D)	N #
+Q1-SA12.1	30800410	CONTATTO N.O.ZBE-101 ZB4	CONN. N.A.ZBE-101	CONTACTO N.A.ZBE-101	CONTACT N.A.ZBE-101	KONTAKTE N.O.ZBE-101 ZB4	3
+Q1-SA12.2	30800171	SELETTORE CHIAVE 2P ZB4-BG027*	KEY SELECTOR 2P ZB4-BG027*	SELECTOR CLE 2P ZB4-BG027*	SELECTEUR CLE 2P ZB4-BG027*	WAHLER CLE 2P ZB4-BG027*	1
+Q1-SA12.2	30800400	BASE ZB4-BZ009	BASE ZB4-BZ009	BASE ZB4-BZ009	BASE ZB4-BZ009	BASIS ZB4-BZ009	1
+Q1-SA12.2	30800410	CONTATTO N.O.ZBE-101 ZB4	CONN. N.A.ZBE-101	CONTACTO N.A.ZBE-101	CONTACT N.A.ZBE-101	KONTAKTE N.O.ZBE-101 ZB4	3
+Q1-K12.10	31340503	ZOCCOLO P7SA-14F-ND 24VDC	BASE P7SA-14F-ND 24VDC	SOPORTE P7SA-14F-ND 24VDC	SUPPORT P7SA-14F-ND 24VCC	SOCKEL P7SA-14F-ND 24VDC	1
+Q1-K12.10	32301490	RELAY G7SA-4A2B 24 VDC	RELAY G7SA-4A2B 24 VDC	RELE G7SA-4A2B 24 VDC	RELAIS G7SA-4A2B 24 VCC	RELAIS G7SA-4A2B 24 VDC	1
+Q1-K12.11	31340503	ZOCCOLO P7SA-14F-ND 24VDC	BASE P7SA-14F-ND 24VDC	SOPORTE P7SA-14F-ND 24VDC	SUPPORT P7SA-14F-ND 24VCC	SOCKEL P7SA-14F-ND 24VDC	1
+Q1-K12.11	32301490	RELAY G7SA-4A2B 24 VDC	RELAY G7SA-4A2B 24 VDC	RELE G7SA-4A2B 24 VDC	RELAIS G7SA-4A2B 24 VCC	RELAIS G7SA-4A2B 24 VDC	1
+Q1-K12.3	32120759	REL.EM.XPS-ATR11530P 3NA+3NA *	EMERGENCY RELAY XPS-ATR11530P	RELE DE EMERGENCIA XPS-ATR1153	RELAIS D'EMERGENCE XPS-ATR1153	SICHERHEITSRELAIS XPS-ATR11530	1
+Q1-S14.2	32337040	A-B SENSAGUARD 440N-Z21SS2H *	A-B SENSAGUARD 440N-Z21SS2H	A-B SENSAGUARD 440N-Z21SS2H	A-B SENSAGUARD 440N-Z21SS2H	A-B SENSAGUARD 440N-Z21SS2H	1
+Q1-S14.4	32337040	A-B SENSAGUARD 440N-Z21SS2H *	A-B SENSAGUARD 440N-Z21SS2H	A-B SENSAGUARD 440N-Z21SS2H	A-B SENSAGUARD 440N-Z21SS2H	A-B SENSAGUARD 440N-Z21SS2H	1
+Q1-S14.1	32337040	A-B SENSAGUARD 440N-Z21SS2H *	A-B SENSAGUARD 440N-Z21SS2H	A-B SENSAGUARD 440N-Z21SS2H	A-B SENSAGUARD 440N-Z21SS2H	A-B SENSAGUARD 440N-Z21SS2H	1
+Q1-S14.5	32337040	A-B SENSAGUARD 440N-Z21SS2H *	A-B SENSAGUARD 440N-Z21SS2H	A-B SENSAGUARD 440N-Z21SS2H	A-B SENSAGUARD 440N-Z21SS2H	A-B SENSAGUARD 440N-Z21SS2H	1
+Q1-S14.3	32337040	A-B SENSAGUARD 440N-Z21SS2H *	A-B SENSAGUARD 440N-Z21SS2H	A-B SENSAGUARD 440N-Z21SS2H	A-B SENSAGUARD 440N-Z21SS2H	A-B SENSAGUARD 440N-Z21SS2H	1
+Q1-K14.2	31340503	ZOCCOLO P7SA-14F-ND 24VDC	BASE P7SA-14F-ND 24VDC	SOPORTE P7SA-14F-ND 24VDC	SUPPORT P7SA-14F-ND 24VCC	SOCKEL P7SA-14F-ND 24VDC	1
+Q1-K14.2	32301490	RELAY G7SA-4A2B 24 VDC	RELAY G7SA-4A2B 24 VDC	RELE G7SA-4A2B 24 VDC	RELAIS G7SA-4A2B 24 VCC	RELAIS G7SA-4A2B 24 VDC	1
+Q1-K14.1	31340503	ZOCCOLO P7SA-14F-ND 24VDC	BASE P7SA-14F-ND 24VDC	SOPORTE P7SA-14F-ND 24VDC	SUPPORT P7SA-14F-ND 24VCC	SOCKEL P7SA-14F-ND 24VDC	1
+Q1-K14.1	32301490	RELAY G7SA-4A2B 24 VDC	RELAY G7SA-4A2B 24 VDC	RELE G7SA-4A2B 24 VDC	RELAIS G7SA-4A2B 24 VCC	RELAIS G7SA-4A2B 24 VDC	1
+Q1-Q16.1	35014067	MTERM FAZ-C6/1-NA *	MAGNETOTHERMAL SWITCH FAZ-C6-N	INTERRUPTOR MAGNETOTERMICO FAZ	INTERRUPTEUR MAGNETO-TERMIQUE	SCHUTZSCHALTER FAZ-C6-NA	1
+Q1-Q16.1	35014096	CONT. AUX MOELLER Z-NHK	AUX CONT.MOELLER Z-NHK	CONT. AUX MOELLER Z-NHK	CONT. AUX MOELLER Z-NHK	HILFSKONT. MOELLER Z-NHK	1
+Q1-Q19.1	35014063	MTERM FAZ-C2/1-NA *	MAGNETOTHERMAL SWITCH FAZ-C2-N	INTERRUPTOR MAGNETOTERMICO FAZ	INTERRUPTEUR MAGNETO-TERMIQUE	SCHUTZSCHALTER FAZ-C2-NA	1
+Q1-Q19.1	35014096	CONT. AUX MOELLER Z-NHK	AUX CONT.MOELLER Z-NHK	CONT. AUX MOELLER Z-NHK	CONT. AUX MOELLER Z-NHK	HILFSKONT. MOELLER Z-NHK	1
+Q1-Q19.2	35014063	MTERM FAZ-C2/1-NA *	MAGNETOTHERMAL SWITCH FAZ-C2-N	INTERRUPTOR MAGNETOTERMICO FAZ	INTERRUPTEUR MAGNETO-TERMIQUE	SCHUTZSCHALTER FAZ-C2-NA	1
+Q1-Q19.2	35014096	CONT. AUX MOELLER Z-NHK	AUX CONT.MOELLER Z-NHK	CONT. AUX MOELLER Z-NHK	CONT. AUX MOELLER Z-NHK	HILFSKONT. MOELLER Z-NHK	1
+Q1-A22.1	51296807	SWITCH PHOENIX SFNB 8TX 24VDC*	SWITCH 8P PHOENIX SFNB 8TX 24V	SWITCH 8P PHOENIX SFNB 8TX 24V	SWITCH 8P PHOENIX SFNB 8TX 24V	SWITCH 8P PHOENIX SFNB 8TX 24V	1
+Q1-A28.1	51283046	DSP 400 EA *	DSP 400 EA	DSP 400 EA	DSP 400 EA	DSP 400 EA	1
+Q1-A30.1	31015035	ISOLATORE MINI MCR-SL-U-U *	PHOENIX CARD MCR-SL-U-U	TARJETA PHOENIX MCR-SL-U-U	CARTE PHOENIX MCR-SL-U-U	KARTE PHOENIX MCR-SL-U-U	1
+Q1-A33.1	31015035	ISOLATORE MINI MCR-SL-U-U *	PHOENIX CARD MCR-SL-U-U	TARJETA PHOENIX MCR-SL-U-U	CARTE PHOENIX MCR-SL-U-U	KARTE PHOENIX MCR-SL-U-U	1

Fosber
FOSBER S.p.A.
via Provinciale per Camaiore, 27/28 55060 Monsagrati (Lucca) - ITALIA
T. +39.0583.3891 - F. +39.0583.389205/385567
E-mail: info@fosber.it

TWIN 400 T.1
BILL OF MATERIAL

customer	CORRUGADORA GUATEMA	REL	L.CENTI	28/06/17	issued	29/06/2017
job nr.	4607	REV			proj. sect.	=TW4+P0
serial nr.	COM17279	DEF			page	9 of 14

REF.	CODE	DESCRIZIONE (I)	DESCRIPTION (UK)	DESCRIPCIÓN (S)	DESCRIPTION (F)	BESCHREIBUNG (D)	N #
+Q1-R34.7	50010501	RESISTENZA 120 OHM 1/4 WATT	RESISTANCE 120 OHM 1/4 WATT	RESISTENCIA 120 OHM 1/4 WATT	RESISTANCE 120 OHM 1/4 WATT	RESISTANCE 120 OHM 1/4 WATT	1
+Q1-A35.1	51500519	A-B 1790D-T16BV0 16 IN	A-B 1790D-T16BV0 16 IN *	A-B 1790D-T16BV0 16 IN *	A-B 1790D-T16BV0 16 IN *	A-B 1790D-T16BV0 16 IN *	1
+Q1-SA35.3	30800165	SELETTORE 3P ZB4-BD57 INSTAB.	SELECTOR 3P UNSTABLE ZB4-BD57	SELECTOR 3P INSTAB. ZB4-BD57	SELECTEUR 3P INSTAB. ZB4-BD57	WAHLER 3P INSTAB. ZB4-BD57	1
+Q1-SA35.3	30800400	BASE ZB4-BZ009	BASE ZB4-BZ009	BASE ZB4-BZ009	BASE ZB4-BZ009	BASIS ZB4-BZ009	1
+Q1-SA35.3	30800410	CONTATTO N.O.ZBE-101 ZB4	CONN. N.A.ZBE-101	CONTACTO N.A.ZBE-101	CONTACT N.A.ZBE-101	KONTAKTE N.O.ZBE-101 ZB4	2
+Q1-SA35.1	32331672	MICROINT.OMRON D4N-8120 *	MICROINT.OMRON D4N-8120	MICROINT.OMRON D4N-8120	MICROINT.OMRON D4N-8120	MICROINT.OMRON D4N-8120	1
+Q1-SA35.2	32331672	MICROINT.OMRON D4N-8120 *	MICROINT.OMRON D4N-8120	MICROINT.OMRON D4N-8120	MICROINT.OMRON D4N-8120	MICROINT.OMRON D4N-8120	1
+Q1-A36.1	51500522	A-B 1790-T0B16X EXP. 16 OUT *	A-B 1790-T0B16X EXP. 16 OUT *	A-B 1790-T0B16X EXP. 16 OUT *	A-B 1790-T0B16X EXP. 16 OUT *	A-B 1790-T0B16X EXP. 16 OUT *	1
+Q1-K36.1	31340503	ZOCCOLO P7SA-14F-ND 24VDC	BASE P7SA-14F-ND 24VDC	SOPORTE P7SA-14F-ND 24VDC	SUPPORT P7SA-14F-ND 24VCC	SOCKEL P7SA-14F-ND 24VDC	1
+Q1-K36.1	32301490	RELAY G7SA-4A2B 24 VDC	RELAY G7SA-4A2B 24 VDC	RELE G7SA-4A2B 24 VDC	RELAIS G7SA-4A2B 24 VCC	RELAIS G7SA-4A2B 24 VDC	1
+Q1-A37.1	51500522	A-B 1790-T0B16X EXP. 16 OUT *	A-B 1790-T0B16X EXP. 16 OUT *	A-B 1790-T0B16X EXP. 16 OUT *	A-B 1790-T0B16X EXP. 16 OUT *	A-B 1790-T0B16X EXP. 16 OUT *	1
+Q1-AT37.1	36540093	SCATOLA RITTAL KL 1528.510	RITTAL KL 1528.210 BOX	CAJA RITTAL KL 1528.210	BOITIER RITTAL KL 1528.210	KAST. RITTAL KL 1528.210	1
+Q1-A38.1	31240630	BOX TB-8M12-4P2-CS12 *	CONNECTION BOX ESCHA 8I/O M23	CAJA CONEXION ESCHA 8I/O M23	BOITE CONNECT. ESCHA 8I/O M23	VERBINDUNG BOX ESCHA 8I/O M23	1
+Q1-A39.1	31240630	BOX TB-8M12-4P2-CS12 *	CONNECTION BOX ESCHA 8I/O M23	CAJA CONEXION ESCHA 8I/O M23	BOITE CONNECT. ESCHA 8I/O M23	VERBINDUNG BOX ESCHA 8I/O M23	1
+Q1-B40.2	51280150	FOTOCELLULA E3S-CT61 OMRON	PHOTOCELL E3S-CT61 OMRON	FOTOCELULA E3S-CT61 OMRON	PHOTOCELL E3S-CT61 OMRON	FOTOZELLE E3S-CT61 OMRON	1
+Q1-B40.1	51280150	FOTOCELLULA E3S-CT61 OMRON	PHOTOCELL E3S-CT61 OMRON	FOTOCELULA E3S-CT61 OMRON	PHOTOCELL E3S-CT61 OMRON	FOTOZELLE E3S-CT61 OMRON	1
+Q1-A40.1	31240630	BOX TB-8M12-4P2-CS12 *	CONNECTION BOX ESCHA 8I/O M23	CAJA CONEXION ESCHA 8I/O M23	BOITE CONNECT. ESCHA 8I/O M23	VERBINDUNG BOX ESCHA 8I/O M23	1
+Q1-A43.1	51060600	LENZE GATEWAY CAN IO EPM-S110*	LENZE GATEWAY CAN IO EPM-S110	LENZE GATEWAY CAN IO EPM-S110	LENZE GATEWAY CAN IO EPM-S110	LENZE GATEWAY CAN IO EPM-S110	1
+Q1-A43.2	51060610	LENZE 8 DIGITAL IN EPM-S202 *	LENZE 8 DIGITAL IN EPM-S202	LENZE 8 DIGITAL IN EPM-S202	LENZE 8 DIGITAL IN EPM-S202	LENZE 8 DIGITAL IN EPM-S202	1
+Q1-A43.3	51060610	LENZE 8 DIGITAL IN EPM-S202 *	LENZE 8 DIGITAL IN EPM-S202	LENZE 8 DIGITAL IN EPM-S202	LENZE 8 DIGITAL IN EPM-S202	LENZE 8 DIGITAL IN EPM-S202	1
+Q1-A43.4	51060615	LENZE 8 DIGITAL OUT EPM-S302 *	LENZE 8 DIGITAL OUT EPM-S302	LENZE 8 DIGITAL OUT EPM-S302	LENZE 8 DIGITAL OUT EPM-S302	LENZE 8 DIGITAL OUT EPM-S302	1
+Q1-A43.5	51060615	LENZE 8 DIGITAL OUT EPM-S302 *	LENZE 8 DIGITAL OUT EPM-S302	LENZE 8 DIGITAL OUT EPM-S302	LENZE 8 DIGITAL OUT EPM-S302	LENZE 8 DIGITAL OUT EPM-S302	1
+Q1-XB44.1	51295355	CONNETTORE SUBCON-PLUS-CAN *	CONNECTOR SUBCON-PLUS-CAN *	CONECTOR SUBCON-PLUS-CAN *	CONNECTEUR SUBCON-PLUS-CAN *	VERBINDER SUBCON-PLUS-CAN *	1
+Q1-K46.1	32300900	RELÈ A-B 700-HLT2Z24 TBS24 VDC	RELAYS 700-HLT2Z24 TBS24 VDC	RELE 700-HLT2Z24 TBS24 VDC	RELAYS 700-HLT2Z24 TBS24 VDC	RELAIS 700-HLT2Z24 TBS24 VDC	1
+Q1-K46.2	32300900	RELÈ A-B 700-HLT2Z24 TBS24 VDC	RELAYS 700-HLT2Z24 TBS24 VDC	RELE 700-HLT2Z24 TBS24 VDC	RELAYS 700-HLT2Z24 TBS24 VDC	RELAIS 700-HLT2Z24 TBS24 VDC	1
+Q1-K46.3	32300900	RELÈ A-B 700-HLT2Z24 TBS24 VDC	RELAYS 700-HLT2Z24 TBS24 VDC	RELE 700-HLT2Z24 TBS24 VDC	RELAYS 700-HLT2Z24 TBS24 VDC	RELAIS 700-HLT2Z24 TBS24 VDC	1
+Q1-K46.4	32300900	RELÈ A-B 700-HLT2Z24 TBS24 VDC	RELAYS 700-HLT2Z24 TBS24 VDC	RELE 700-HLT2Z24 TBS24 VDC	RELAYS 700-HLT2Z24 TBS24 VDC	RELAIS 700-HLT2Z24 TBS24 VDC	1
+Q1-K46.5	32300900	RELÈ A-B 700-HLT2Z24 TBS24 VDC	RELAYS 700-HLT2Z24 TBS24 VDC	RELE 700-HLT2Z24 TBS24 VDC	RELAYS 700-HLT2Z24 TBS24 VDC	RELAIS 700-HLT2Z24 TBS24 VDC	1

Fosber
FOSBER S.p.A.
via Provinciale per Camaiore, 27/28 55060 Monsagrati (Lucca) - ITALIA
T. +39.0583.3891 - F. +39.0583.389205/385567
E-mail: info@fosber.it

TWIN 400 T.1
BILL OF MATERIAL

customer	CORRUGADORA GUATEMA	REL	L.CENTI	28/06/17	issued	29/06/2017
job nr.	4607	REV			proj. sect.	=TW4+P0
serial nr.	COM17279	DEF			page	10 of 14

REF.	CODE	DESCRIZIONE (I)	DESCRIPTION (UK)	DESCRIPCIÓN (S)	DESCRIPTION (F)	BESCHREIBUNG (D)	N #
+Q1-K46.6	32300900	RELÈ A-B 700-HLT2Z24 TBS24 VDC	RELAYS 700-HLT2Z24 TBS24 VDC	RELE 700-HLT2Z24 TBS24 VDC	RELAYS 700-HLT2Z24 TBS24 VDC	RELAIS 700-HLT2Z24 TBS24 VDC	1
+Q1-K46.7	32300900	RELÈ A-B 700-HLT2Z24 TBS24 VDC	RELAYS 700-HLT2Z24 TBS24 VDC	RELE 700-HLT2Z24 TBS24 VDC	RELAYS 700-HLT2Z24 TBS24 VDC	RELAIS 700-HLT2Z24 TBS24 VDC	1
+Q1-K46.8	32300900	RELÈ A-B 700-HLT2Z24 TBS24 VDC	RELAYS 700-HLT2Z24 TBS24 VDC	RELE 700-HLT2Z24 TBS24 VDC	RELAYS 700-HLT2Z24 TBS24 VDC	RELAIS 700-HLT2Z24 TBS24 VDC	1
+Q1-K46.9	32300900	RELÈ A-B 700-HLT2Z24 TBS24 VDC	RELAYS 700-HLT2Z24 TBS24 VDC	RELE 700-HLT2Z24 TBS24 VDC	RELAYS 700-HLT2Z24 TBS24 VDC	RELAIS 700-HLT2Z24 TBS24 VDC	1
+Q1-K46.10	32300900	RELÈ A-B 700-HLT2Z24 TBS24 VDC	RELAYS 700-HLT2Z24 TBS24 VDC	RELE 700-HLT2Z24 TBS24 VDC	RELAYS 700-HLT2Z24 TBS24 VDC	RELAIS 700-HLT2Z24 TBS24 VDC	1
+Q1-K46.11	32300900	RELÈ A-B 700-HLT2Z24 TBS24 VDC	RELAYS 700-HLT2Z24 TBS24 VDC	RELE 700-HLT2Z24 TBS24 VDC	RELAYS 700-HLT2Z24 TBS24 VDC	RELAIS 700-HLT2Z24 TBS24 VDC	1
+Q1-K46.12	32300900	RELÈ A-B 700-HLT2Z24 TBS24 VDC	RELAYS 700-HLT2Z24 TBS24 VDC	RELE 700-HLT2Z24 TBS24 VDC	RELAYS 700-HLT2Z24 TBS24 VDC	RELAIS 700-HLT2Z24 TBS24 VDC	1
+Q1-K46.13	32300900	RELÈ A-B 700-HLT2Z24 TBS24 VDC	RELAYS 700-HLT2Z24 TBS24 VDC	RELE 700-HLT2Z24 TBS24 VDC	RELAYS 700-HLT2Z24 TBS24 VDC	RELAIS 700-HLT2Z24 TBS24 VDC	1
+Q1-K46.14	32300900	RELÈ A-B 700-HLT2Z24 TBS24 VDC	RELAYS 700-HLT2Z24 TBS24 VDC	RELE 700-HLT2Z24 TBS24 VDC	RELAYS 700-HLT2Z24 TBS24 VDC	RELAIS 700-HLT2Z24 TBS24 VDC	1
+Q1-K46.15	32300900	RELÈ A-B 700-HLT2Z24 TBS24 VDC	RELAYS 700-HLT2Z24 TBS24 VDC	RELE 700-HLT2Z24 TBS24 VDC	RELAYS 700-HLT2Z24 TBS24 VDC	RELAIS 700-HLT2Z24 TBS24 VDC	1
+Q1-K46.16	32300900	RELÈ A-B 700-HLT2Z24 TBS24 VDC	RELAYS 700-HLT2Z24 TBS24 VDC	RELE 700-HLT2Z24 TBS24 VDC	RELAYS 700-HLT2Z24 TBS24 VDC	RELAIS 700-HLT2Z24 TBS24 VDC	1
+Q1-A63.10	51060600	LENZE GATEWAY CAN IO EPM-S110*	LENZE GATEWAY CAN IO EPM-S110	LENZE GATEWAY CAN IO EPM-S110	LENZE GATEWAY CAN IO EPM-S110	LENZE GATEWAY CAN IO EPM-S110	1
+Q1-A63.10.1	51060610	LENZE 8 DIGITAL IN EPM-S202 *	LENZE 8 DIGITAL IN EPM-S202	LENZE 8 DIGITAL IN EPM-S202	LENZE 8 DIGITAL IN EPM-S202	LENZE 8 DIGITAL IN EPM-S202	1
+Q1-A63.10.2	51060610	LENZE 8 DIGITAL IN EPM-S202 *	LENZE 8 DIGITAL IN EPM-S202	LENZE 8 DIGITAL IN EPM-S202	LENZE 8 DIGITAL IN EPM-S202	LENZE 8 DIGITAL IN EPM-S202	1
+Q1-A63.10.3	51060615	LENZE 8 DIGITAL OUT EPM-S302 *	LENZE 8 DIGITAL OUT EPM-S302	LENZE 8 DIGITAL OUT EPM-S302	LENZE 8 DIGITAL OUT EPM-S302	LENZE 8 DIGITAL OUT EPM-S302	1
+Q1-A63.10.4	51060615	LENZE 8 DIGITAL OUT EPM-S302 *	LENZE 8 DIGITAL OUT EPM-S302	LENZE 8 DIGITAL OUT EPM-S302	LENZE 8 DIGITAL OUT EPM-S302	LENZE 8 DIGITAL OUT EPM-S302	1
+Q1-A63.10.5	51060610	LENZE 8 DIGITAL IN EPM-S202 *	LENZE 8 DIGITAL IN EPM-S202	LENZE 8 DIGITAL IN EPM-S202	LENZE 8 DIGITAL IN EPM-S202	LENZE 8 DIGITAL IN EPM-S202	1
+Q1-A63.10.6	51060615	LENZE 8 DIGITAL OUT EPM-S302 *	LENZE 8 DIGITAL OUT EPM-S302	LENZE 8 DIGITAL OUT EPM-S302	LENZE 8 DIGITAL OUT EPM-S302	LENZE 8 DIGITAL OUT EPM-S302	1
+C0-H3.1	30800360	TESTA LAMPADA ZB4-BV043 ROSSA	LAMP HEAD ZB4-BV043 RED	TAPON PARA LAMPARA ZB4-BV043 R	TETE LAMPE ZB4-BV043 ROUGE	KOPFTEIL LAMPE ZB4-BV043 ROT	1
+C0-H3.1	30800400	BASE ZB4-BZ009	BASE ZB4-BZ009	BASE ZB4-BZ009	BASE ZB4-BZ009	BASIS ZB4-BZ009	1
+C0-H3.1	30800460	LED 24V ROSSO ZBV-B4	LED 24V RED ZBV-B4	LED 24V ROUGE ZBV-B4	LED 24V ROUGE ZBV-B4	LED 24V ROSSO ZBV-B4	1
+C0-A3.1	51500520	A-B 1790D-T8BV8B 8IN/8OUT *	A-B 1790D-T8BV8B 8IN/8OUT *	CONECTOR A-B 1790D-T8BV8B 8IN/	A-B 1790D-T8BV8B 8IN/8OUT *	A-B 1790D-T8BV8B 8IN/8OUT *	1
+C0-SB3.3	30800105	PULSANTE STOP ZB4-BA4347	STOP BUTTON ZB4-BA4347	PULSADOR ALTO ZB4-BA4347	BOUT. STOP ZB4-BA4347	STOPP-TASTE ZB4-BA4347	1
+C0-SB3.3	30800400	BASE ZB4-BZ009	BASE ZB4-BZ009	BASE ZB4-BZ009	BASE ZB4-BZ009	BASIS ZB4-BZ009	1
+C0-SB3.3	30800410	CONTATTO N.O.ZBE-101 ZB4	CONN. N.A.ZBE-101	CONTACTO N.A.ZBE-101	CONTACT N.A.ZBE-101	KONTAKTE N.O.ZBE-101 ZB4	1
+C0-SB3.1	30800205	PULSANTE LUM.ZB4-BW3337 VERD.	BRIGHT GREEN BUTTON. ZB4-BW333	PULSADOR LUMINOSO ZB4-BW3337 V	BUTTONS LUMINEUX VERT ZB4-BW3	LEUCHTTASTE GRUEN ZB4-BW3337	1
+C0-SB3.1	30800400	BASE ZB4-BZ009	BASE ZB4-BZ009	BASE ZB4-BZ009	BASE ZB4-BZ009	BASIS ZB4-BZ009	1
+C0-SB3.1	30800410	CONTATTO N.O.ZBE-101 ZB4	CONN. N.A.ZBE-101	CONTACTO N.A.ZBE-101	CONTACT N.A.ZBE-101	KONTAKTE N.O.ZBE-101 ZB4	2

Fosber
FOSBER S.p.A.
via Provinciale per Camaiore, 27/28 55060 Monsagrati (Lucca) - ITALIA
T. +39.0583.3891 - F. +39.0583.389205/385567
E-mail: info@fosber.it

TWIN 400 T.1
BILL OF MATERIAL

customer	CORRUGADORA GUATEMA	REL	L.CENTI	28/06/17	issued	29/06/2017
job nr.	4607	REV			proj. sect.	=TW4+P0
serial nr.	COM17279	DEF			page	11 of 14

REF.	CODE	DESCRIZIONE (I)	DESCRIPTION (UK)	DESCRIPCIÓN (S)	DESCRIPTION (F)	BESCHREIBUNG (D)	N #
+C0-SB3.1	30800455	LED 24V VERDE ZBV-B3	LED 24V GREEN ZBV-B3	LED 24V VERT ZBV-B3	LED 24V VERT ZBV-B3	LED 24V GRUEN ZBV-B3	1
+C0-SA3.1	30800165	SELETTORE 3P ZB4-BD57 INSTAB.	SELECTOR 3P UNSTABLE ZB4-BD57	SELECTOR 3P INSTAB. ZB4-BD57	SELECTEUR 3P INSTAB. ZB4-BD57	WAHLER 3P INSTAB. ZB4-BD57	1
+C0-SA3.1	30800400	BASE ZB4-BZ009	BASE ZB4-BZ009	BASE ZB4-BZ009	BASE ZB4-BZ009	BASIS ZB4-BZ009	1
+C0-SA3.1	30800410	CONTATTO N.O.ZBE-101 ZB4	CONN. N.A.ZBE-101	CONTACTO N.A.ZBE-101	CONTACT N.A.ZBE-101	KONTAKTE N.O.ZBE-101 ZB4	2
+C0-A4.1	51500521	A-B 1790-T16BV0X EXP. 16 IN *	A-B 1790-T16BV0X EXP. 16 IN *	A-B 1790-T16BV0X EXP. 16 IN *	A-B 1790-T16BV0X EXP. 16 IN *	A-B 1790-T16BV0X EXP. 16 IN *	1
+C0-SA4.1	30800165	SELETTORE 3P ZB4-BD57 INSTAB.	SELECTOR 3P UNSTABLE ZB4-BD57	SELECTOR 3P INSTAB. ZB4-BD57	SELECTEUR 3P INSTAB. ZB4-BD57	WAHLER 3P INSTAB. ZB4-BD57	1
+C0-SA4.1	30800400	BASE ZB4-BZ009	BASE ZB4-BZ009	BASE ZB4-BZ009	BASE ZB4-BZ009	BASIS ZB4-BZ009	1
+C0-SA4.1	30800410	CONTATTO N.O.ZBE-101 ZB4	CONN. N.A.ZBE-101	CONTACTO N.A.ZBE-101	CONTACT N.A.ZBE-101	KONTAKTE N.O.ZBE-101 ZB4	2
+C0-SA4.2	30800165	SELETTORE 3P ZB4-BD57 INSTAB.	SELECTOR 3P UNSTABLE ZB4-BD57	SELECTOR 3P INSTAB. ZB4-BD57	SELECTEUR 3P INSTAB. ZB4-BD57	WAHLER 3P INSTAB. ZB4-BD57	1
+C0-SA4.2	30800400	BASE ZB4-BZ009	BASE ZB4-BZ009	BASE ZB4-BZ009	BASE ZB4-BZ009	BASIS ZB4-BZ009	1
+C0-SA4.2	30800410	CONTATTO N.O.ZBE-101 ZB4	CONN. N.A.ZBE-101	CONTACTO N.A.ZBE-101	CONTACT N.A.ZBE-101	KONTAKTE N.O.ZBE-101 ZB4	2
+C0-SA4.3	30800165	SELETTORE 3P ZB4-BD57 INSTAB.	SELECTOR 3P UNSTABLE ZB4-BD57	SELECTOR 3P INSTAB. ZB4-BD57	SELECTEUR 3P INSTAB. ZB4-BD57	WAHLER 3P INSTAB. ZB4-BD57	1
+C0-SA4.3	30800400	BASE ZB4-BZ009	BASE ZB4-BZ009	BASE ZB4-BZ009	BASE ZB4-BZ009	BASIS ZB4-BZ009	1
+C0-SA4.3	30800410	CONTATTO N.O.ZBE-101 ZB4	CONN. N.A.ZBE-101	CONTACTO N.A.ZBE-101	CONTACT N.A.ZBE-101	KONTAKTE N.O.ZBE-101 ZB4	2
+C0-SA4.4	30800165	SELETTORE 3P ZB4-BD57 INSTAB.	SELECTOR 3P UNSTABLE ZB4-BD57	SELECTOR 3P INSTAB. ZB4-BD57	SELECTEUR 3P INSTAB. ZB4-BD57	WAHLER 3P INSTAB. ZB4-BD57	1
+C0-SA4.4	30800400	BASE ZB4-BZ009	BASE ZB4-BZ009	BASE ZB4-BZ009	BASE ZB4-BZ009	BASIS ZB4-BZ009	1
+C0-SA4.4	30800410	CONTATTO N.O.ZBE-101 ZB4	CONN. N.A.ZBE-101	CONTACTO N.A.ZBE-101	CONTACT N.A.ZBE-101	KONTAKTE N.O.ZBE-101 ZB4	2
+C0-SB4.2	30800200	PULSANTE LUM. BIAN. ZB4-BW3137	BRIGHT WHITE BUTTON. ZB4-BW313	PULS. LUMINOSO BLANCO ZB4-BW31	BUTTONS LIMINAUXILIAIRE BLANC	LEUCHTTASTE WEISS ZB4-BW3137	1
+C0-SB4.2	30800400	BASE ZB4-BZ009	BASE ZB4-BZ009	BASE ZB4-BZ009	BASE ZB4-BZ009	BASIS ZB4-BZ009	1
+C0-SB4.2	30800410	CONTATTO N.O.ZBE-101 ZB4	CONN. N.A.ZBE-101	CONTACTO N.A.ZBE-101	CONTACT N.A.ZBE-101	KONTAKTE N.O.ZBE-101 ZB4	1
+C0-SB4.2	30800450	LED 24V BIANCO ZBV-B1	LED 24V WHITE ZBV-B1	LED 24V BLANCO ZBV-B1	LED 24V BLANC ZBV-B1	LED 24V WEISS ZBV-B1	1
+C0-SB4.1	30800220	PULSANTE LUM.ZB4-BW3637 BLU	BRIGHT BLUE BUTTON ZB4-BW363	PULSADOR LUMINOSO ZB4-BW3637 A	BUTTONS LUMINEUX BLEU ZB4-BW	LEUCHTTASTE ZB4-BW3637 BLAU	1
+C0-SB4.1	30800400	BASE ZB4-BZ009	BASE ZB4-BZ009	BASE ZB4-BZ009	BASE ZB4-BZ009	BASIS ZB4-BZ009	1
+C0-SB4.1	30800410	CONTATTO N.O.ZBE-101 ZB4	CONN. N.A.ZBE-101	CONTACTO N.A.ZBE-101	CONTACT N.A.ZBE-101	KONTAKTE N.O.ZBE-101 ZB4	1
+C0-SB4.1	30800470	LED 24V BLU ZBV-B6	LED 24V BLUE ZBV-B6	LED 24V BLEU ZBV-B6	LED 24V BLEU ZBV-B6	LED 24V BLU ZBV-B6	1
+C0-SB6.2	30800101	PULS.ZB4-BS8447SIC ROSSO FUNGO	ZB4-BS8447SIC RED BUTTON	PULS. ZB4-BS8447SIC ROJO SETA	BOUT. ZB4-BS8447SIC ROUGE	SCHLAGTASTE ZB4-BS8447SIC ROT	1
+C0-SB6.2	30800400	BASE ZB4-BZ009	BASE ZB4-BZ009	BASE ZB4-BZ009	BASE ZB4-BZ009	BASIS ZB4-BZ009	1
+C0-SB6.2	30800410	CONTATTO N.O.ZBE-101 ZB4	CONN. N.A.ZBE-101	CONTACTO N.A.ZBE-101	CONTACT N.A.ZBE-101	KONTAKTE N.O.ZBE-101 ZB4	1

Fosber
FOSBER S.p.A.
via Provinciale per Camaiore, 27/28 55060 Monsagrati (Lucca) - ITALIA
T. +39.0583.3891 - F. +39.0583.389205/385567
E-mail: info@fosber.it

TWIN 400 T.1
BILL OF MATERIAL

customer	CORRUGADORA GUATEMA	REL	L.CENTI	28/06/17	issued	29/06/2017
job nr.	4607	REV			proj. sect.	=TW4+P0
serial nr.	COM17279	DEF			page	12 of 14

REF.	CODE	DESCRIZIONE (I)	DESCRIPTION (UK)	DESCRIPCIÓN (S)	DESCRIPTION (F)	BESCHREIBUNG (D)	N #
+C0-SB6.2	30800415	CONTATTO N.C.ZBE-102 ZB4	CONN. N.C.ZBE-102	CONTACT N.C.ZBE-102	CONTACT N.C.ZBE-102	KONTAKTE N.C.ZBE-102 ZB4	5
+C0-SB6.1							1
+C0-XB8.1	31052031	CONNETTORE ETHERNET ENSP1F5 *	ETHERNET ENSP1F5 CONNECTOR*	CONNECTOR ETHERNET ENSP1F5 *	CONNECTEUR ETHERNET ENSP1F5 *	VERBINDER ETHERNET ENSP1F5 *	1
+C0-XB8.1	31052033	TAPPO PER CONN. 67-0300 *	67-0300 CONNECTOR CAP *	TAPON PARA CON. 67-0300 *	BOUCHON POUR CONN. 67-0300	ABD. F. VERB. 67-0300 *	1
+B0-XB6.2	32345251	CONNETT.FIBRA OTT.SFOC-0002 *	CONNECTOR FIBER OTT.SFOC-0002	CONECTOR FIBRA OTT.SFOC-0002	CONNECTEUR FIBRE OTT.SFOC-0002	VERBINDER FASER OTT.SFOC-0002	1
+B0-XB6.3	32345251	CONNETT.FIBRA OTT.SFOC-0002 *	CONNECTOR FIBER OTT.SFOC-0002	CONECTOR FIBRA OTT.SFOC-0002	CONNECTEUR FIBRE OTT.SFOC-0002	VERBINDER FASER OTT.SFOC-0002	1
+B0-A6.1	32345216	SCOL-0404D-1003 4DO-4DI IP67 *	SCOL-0404D-1003 4DO-4DI IP67 *	SCOL-0404D-1003 4DO-4DI IP67 *	SCOL-0404D-1003 4DO-4DI IP67 *	SCOL-0404D-1003 4DO-4DI IP67 *	1
+B0-XB6.4	32345251	CONNETT.FIBRA OTT.SFOC-0002 *	CONNECTOR FIBER OTT.SFOC-0002	CONECTOR FIBRA OTT.SFOC-0002	CONNECTEUR FIBRE OTT.SFOC-0002	VERBINDER FASER OTT.SFOC-0002	1
+B0-XB6.1							1
+B0-XB6.5							1
+B0-XB7.1	32345251	CONNETT.FIBRA OTT.SFOC-0002 *	CONNECTOR FIBER OTT.SFOC-0002	CONECTOR FIBRA OTT.SFOC-0002	CONNECTEUR FIBRE OTT.SFOC-0002	VERBINDER FASER OTT.SFOC-0002	1
+B0-A7.1	32345227	SNNE-0404D-0001 4DI/4D0 IP67 *	SNNE-0404D-0001 4DI/4D0 IP67	SNNE-0404D-0001 4DI/4D0 IP67	SNNE-0404D-0001 4DI/4D0 IP67	SNNE-0404D-0001 4DI/4D0 IP67	1
+B0-XB7.2	32345251	CONNETT.FIBRA OTT.SFOC-0002 *	CONNECTOR FIBER OTT.SFOC-0002	CONECTOR FIBRA OTT.SFOC-0002	CONNECTEUR FIBRE OTT.SFOC-0002	VERBINDER FASER OTT.SFOC-0002	1
+B0-FC7.1							1
+B0-XB8.1	32345251	CONNETT.FIBRA OTT.SFOC-0002 *	CONNECTOR FIBER OTT.SFOC-0002	CONECTOR FIBRA OTT.SFOC-0002	CONNECTEUR FIBRE OTT.SFOC-0002	VERBINDER FASER OTT.SFOC-0002	1
+B0-A8.1	32345227	SNNE-0404D-0001 4DI/4D0 IP67 *	SNNE-0404D-0001 4DI/4D0 IP67	SNNE-0404D-0001 4DI/4D0 IP67	SNNE-0404D-0001 4DI/4D0 IP67	SNNE-0404D-0001 4DI/4D0 IP67	1
+B0-XB8.2	32345251	CONNETT.FIBRA OTT.SFOC-0002 *	CONNECTOR FIBER OTT.SFOC-0002	CONECTOR FIBRA OTT.SFOC-0002	CONNECTEUR FIBRE OTT.SFOC-0002	VERBINDER FASER OTT.SFOC-0002	1
+B0-A9.1							1
+B0-A9.2							1
+B0-XB10.2	32345251	CONNETT.FIBRA OTT.SFOC-0002 *	CONNECTOR FIBER OTT.SFOC-0002	CONECTOR FIBRA OTT.SFOC-0002	CONNECTEUR FIBRE OTT.SFOC-0002	VERBINDER FASER OTT.SFOC-0002	1
+B0-XB10.3	32345251	CONNETT.FIBRA OTT.SFOC-0002 *	CONNECTOR FIBER OTT.SFOC-0002	CONECTOR FIBRA OTT.SFOC-0002	CONNECTEUR FIBRE OTT.SFOC-0002	VERBINDER FASER OTT.SFOC-0002	1
+B0-A10.1	32345216	SCOL-0404D-1003 4DO-4DI IP67 *	SCOL-0404D-1003 4DO-4DI IP67 *	SCOL-0404D-1003 4DO-4DI IP67 *	SCOL-0404D-1003 4DO-4DI IP67 *	SCOL-0404D-1003 4DO-4DI IP67 *	1
+B0-XB10.1							1
+B0-XB10.4							1
+B0-XB11.1	32345251	CONNETT.FIBRA OTT.SFOC-0002 *	CONNECTOR FIBER OTT.SFOC-0002	CONECTOR FIBRA OTT.SFOC-0002	CONNECTEUR FIBRE OTT.SFOC-0002	VERBINDER FASER OTT.SFOC-0002	1
+B0-A11.1	32345227	SNNE-0404D-0001 4DI/4D0 IP67 *	SNNE-0404D-0001 4DI/4D0 IP67	SNNE-0404D-0001 4DI/4D0 IP67	SNNE-0404D-0001 4DI/4D0 IP67	SNNE-0404D-0001 4DI/4D0 IP67	1
+B0-XB11.2	32345251	CONNETT.FIBRA OTT.SFOC-0002 *	CONNECTOR FIBER OTT.SFOC-0002	CONECTOR FIBRA OTT.SFOC-0002	CONNECTEUR FIBRE OTT.SFOC-0002	VERBINDER FASER OTT.SFOC-0002	1
+B0-XB14.2	32345251	CONNETT.FIBRA OTT.SFOC-0002 *	CONNECTOR FIBER OTT.SFOC-0002	CONECTOR FIBRA OTT.SFOC-0002	CONNECTEUR FIBRE OTT.SFOC-0002	VERBINDER FASER OTT.SFOC-0002	1

Fosber
FOSBER S.p.A.
via Provinciale per Camaiore, 27/28 55060 Monsagrati (Lucca) - ITALIA
T. +39.0583.3891 - F. +39.0583.389205/385567
E-mail: info@fosber.it

TWIN 400 T.1
BILL OF MATERIAL

customer	CORRUGADORA GUATEMA	REL	L.CENTI	28/06/17	issued	29/06/2017
job nr.	4607	REV			proj. sect.	=TW4+P0
serial nr.	COM17279	DEF			page	13 of 14

REF.	CODE	DESCRIZIONE (I)	DESCRIPTION (UK)	DESCRIPCIÓN (S)	DESCRIPTION (F)	BESCHREIBUNG (D)	N #
+B0-XB14.3	32345251	CONNETT.FIBRA OTT.SFOC-0002 *	CONNECTOR FIBER OTT.SFOC-0002	CONECTOR FIBRA OTT.SFOC-0002	CONNECTEUR FIBRE OTT.SFOC-0002	VERBINDER FASER OTT.SFOC-0002	1
+B0-A14.1	32345216	SCOL-0404D-1003 4DO-4DI IP67 *	SCOL-0404D-1003 4DO-4DI IP67 *	SCOL-0404D-1003 4DO-4DI IP67 *	SCOL-0404D-1003 4DO-4DI IP67 *	SCOL-0404D-1003 4DO-4DI IP67 *	1
+B0-XB14.1							1
+B0-XB14.4	32345162	CONNET.5 POLI MAS. M12 90°PG9*	CONNET.5 POLE MALE M12 90	CONECTOR 5 POLE M12 90° PG9	CONNECTEUR 5 POLE M12 90° PG9	ANSCHLUSSST. 5 STIFTE M12 90	1
+B0-XB15.1	32345251	CONNETT.FIBRA OTT.SFOC-0002 *	CONNECTOR FIBER OTT.SFOC-0002	CONECTOR FIBRA OTT.SFOC-0002	CONNECTEUR FIBRE OTT.SFOC-0002	VERBINDER FASER OTT.SFOC-0002	1
+B0-A15.1	32345227	SNNE-0404D-0001 4DI/4D0 IP67 *	SNNE-0404D-0001 4DI/4D0 IP67	SNNE-0404D-0001 4DI/4D0 IP67	SNNE-0404D-0001 4DI/4D0 IP67	SNNE-0404D-0001 4DI/4D0 IP67	1
+B0-XB15.2	32345251	CONNETT.FIBRA OTT.SFOC-0002 *	CONNECTOR FIBER OTT.SFOC-0002	CONECTOR FIBRA OTT.SFOC-0002	CONNECTEUR FIBRE OTT.SFOC-0002	VERBINDER FASER OTT.SFOC-0002	1
+B2-XB3.2	41150305	CAVO ALIMENTAZIONE MODULO SMC*	CABLE POWER SUPPLY SMC	CABLE ALIMENTACION SMC	CABLE ALIMENTATION SMC	KABEL EINSPEISUNG SMC	1
+B2-Y3.1	41150272	EX500-GDN1 NPDP GATEWAY D.NET	EX500-GDN1 NPDP GATEWAY DEVICE	EX500-GDN1 NPDP GATEWAY DEVICE	EX500-GDN1 NPDP GATEWAY DEVICE	EX500-GDN1 NPDP GATEWAY DEVICE	1
+B2XB3.3	41150301	CAVO DERIV.NODO/S SMC 1MT *	CAVO DERIV.NODO/S SMC 1MT	CABLE DERIV.NODO/S SMC 1MT	CABLE DERIV.NODO/S SMC 1MT	CABLE DERIV.NODO/S SMC 1MT	1
+B2XB3.4	41150301	CAVO DERIV.NODO/S SMC 1MT *	CAVO DERIV.NODO/S SMC 1MT	CABLE DERIV.NODO/S SMC 1MT	CABLE DERIV.NODO/S SMC 1MT	CABLE DERIV.NODO/S SMC 1MT	1
+B2-XB3.1	41150307	CAVO COMUNICAZIONE MODULO SMC*	COMMUNICATION CABLE MOD.SMC*	CABLE COMUNICACIËN MËDULO SMC*	CABLE COMMUNIC. MODULE SMC*	KOMMUNIKATIONSKAB. MODUL SMC*	1
+B2-4.2	41150301	CAVO DERIV.NODO/S SMC 1MT *	CAVO DERIV.NODO/S SMC 1MT	CABLE DERIV.NODO/S SMC 1MT	CABLE DERIV.NODO/S SMC 1MT	CABLE DERIV.NODO/S SMC 1MT	1
+B2-Y4.1	41150268	SS5V2-W10SA2WD-15B-I008 "SMC"*	SS5V2-W10SA2WD-15B-I008 "SMC"*	SS5V2-W10SA2WD-15B-I008 "SMC"*	SS5V2-W10SA2WD-15B-I008 "SMC"*	SS5V2-W10SA2WD-15B-I008 "SMC"*	1
+B2-5.1	41150301	CAVO DERIV.NODO/S SMC 1MT *	CAVO DERIV.NODO/S SMC 1MT	CABLE DERIV.NODO/S SMC 1MT	CABLE DERIV.NODO/S SMC 1MT	CABLE DERIV.NODO/S SMC 1MT	1
+B2-Y5.1	41150269	SS5V2-W10SA2WD-13B-I011 "SMC"*	SS5V2-W10SA2WD-13B-I011 "SMC"*	SS5V2-W10SA2WD-13B-I011 "SMC"*	SS5V2-W10SA2WD-13B-I011 "SMC"*	SS5V2-W10SA2WD-13B-I011 "SMC"*	1

Fosber
FOSBER S.p.A.
via Provinciale per Camaiore, 27/28 55060 Monsagrati (Lucca) - ITALIA
T. +39.0583.3891 - F. +39.0583.389205/385567
E-mail: info@fosber.it

TWIN 400 T.1
BILL OF MATERIAL

customer	CORRUGADORA GUATEMA	REL	L.CENTI	28/06/17	issued	29/06/2017
job nr.	4607	REV			proj. sect.	=TW4+P0
serial nr.	COM17279	DEF			page	14 of 14