Icepi Zero v1.3!

OSHW FR000026

TestPoint TP1 GND
TestPoint TP2 GND
+5V TestPoint TP3
+3V3 TestPoint TP4
+2V5 TestPoint TP5
+1V1 TestPoint TP6

H1 MountingHole
H2 MountingHole
H3 MountingHole
H4 MountingHole

Power — File: power.kicad_sch
GPDI — File: gpdi.kicad_sch
USB — File: usb.kicad_sch
SDRAM — File: sdram.kicad_sch
Flash — File: flash.kicad_sch
uSD — File: sd.kicad_sch
Unused IO — File: io.kicad_sch

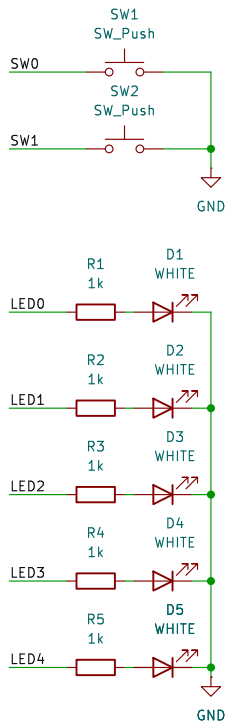

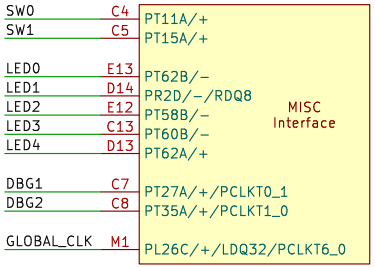

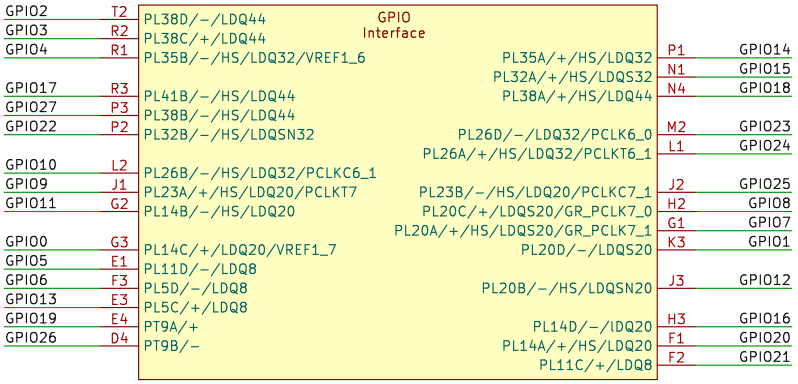

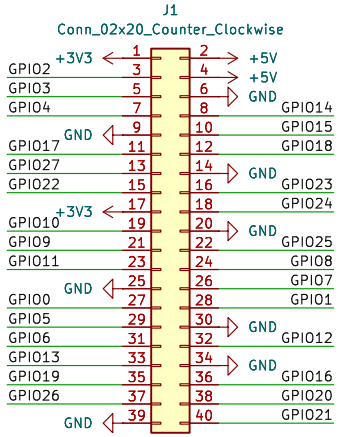

50MHz Clock
Replacable with any 50MHz MEMS 3.3V oscillator

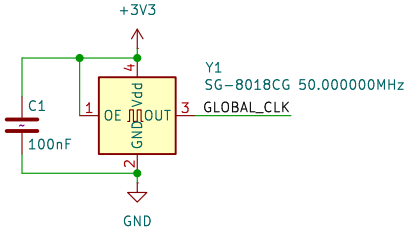

TestPoint TP7 DBG2
TestPoint TP8 DBG1

PWR_FLAG GND

License: Solderpad
https://github.com/cheyao/icepi-zero
Chengyin Yao (cheyao)

Sheet: /
File: icepi-zero.kicad_sch

Title: Icepi Zero

Size: A4	Date: 2025-10-10	**Rev: v1.3**
KiCad E.D.A. 9.0.7		Id: 1/8

Decoupling capacitors based on FPGA-TN-02038

Power up sequence:
1. VCCio8 > 2.3
2. Vcc > 0.95 & Vccaux > 2.1
Fulfilled by the varying capacitor sizes
Note:
Inductors must be 100mA+ and 400mΩ-

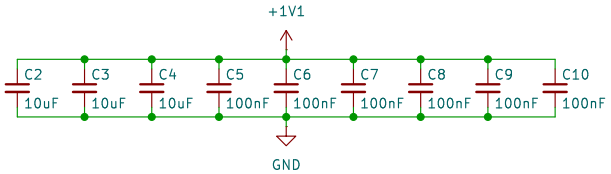

Filter out noise from 2V5 net

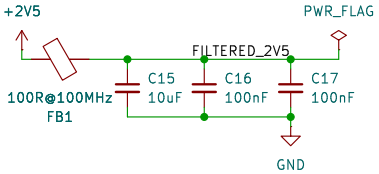

Should have 1x 10u per bank and 1x 100n per pin
But can't fit them all so a few 10u caps are ommited

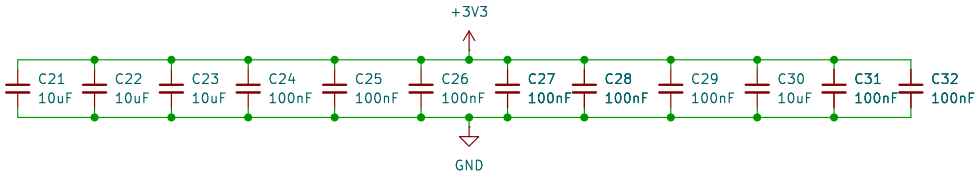

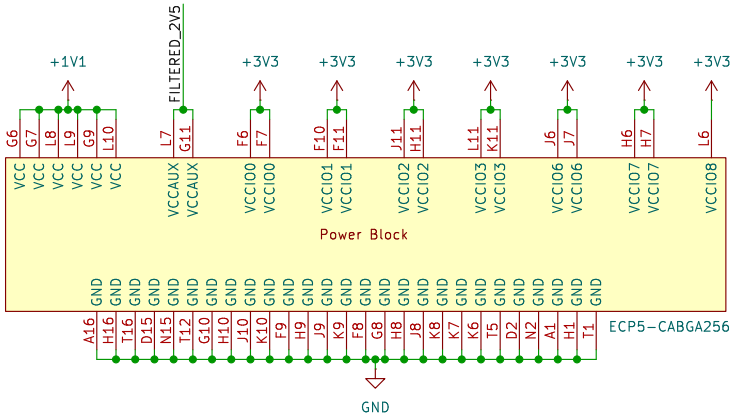

Voltage Regulators

(10/12+1)*0.6=1.1V

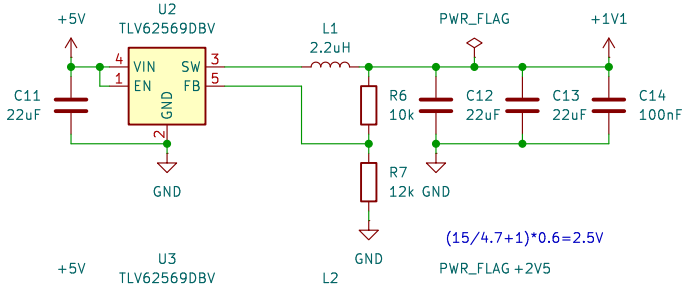

(15/4.7+1)*0.6=2.5V

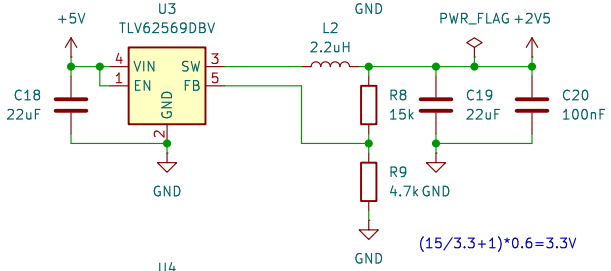

(15/3.3+1)*0.6=3.3V

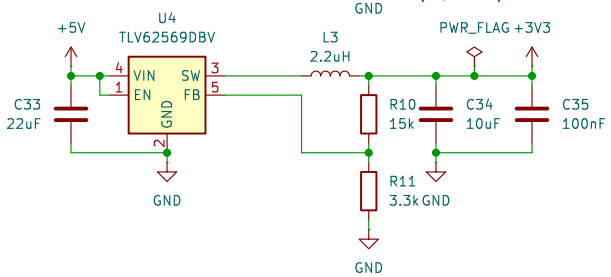

License: Solderpad
https://github.com/cheyao/icepi-zero
Chengyin Yao (cheyao)

Sheet: /Power/
File: power.kicad_sch

Title: Icepi Zero

Size: A4	Date: 2025-10-10	**Rev: v1.3**
KiCad E.D.A. 9.0.7		Id: 2/8

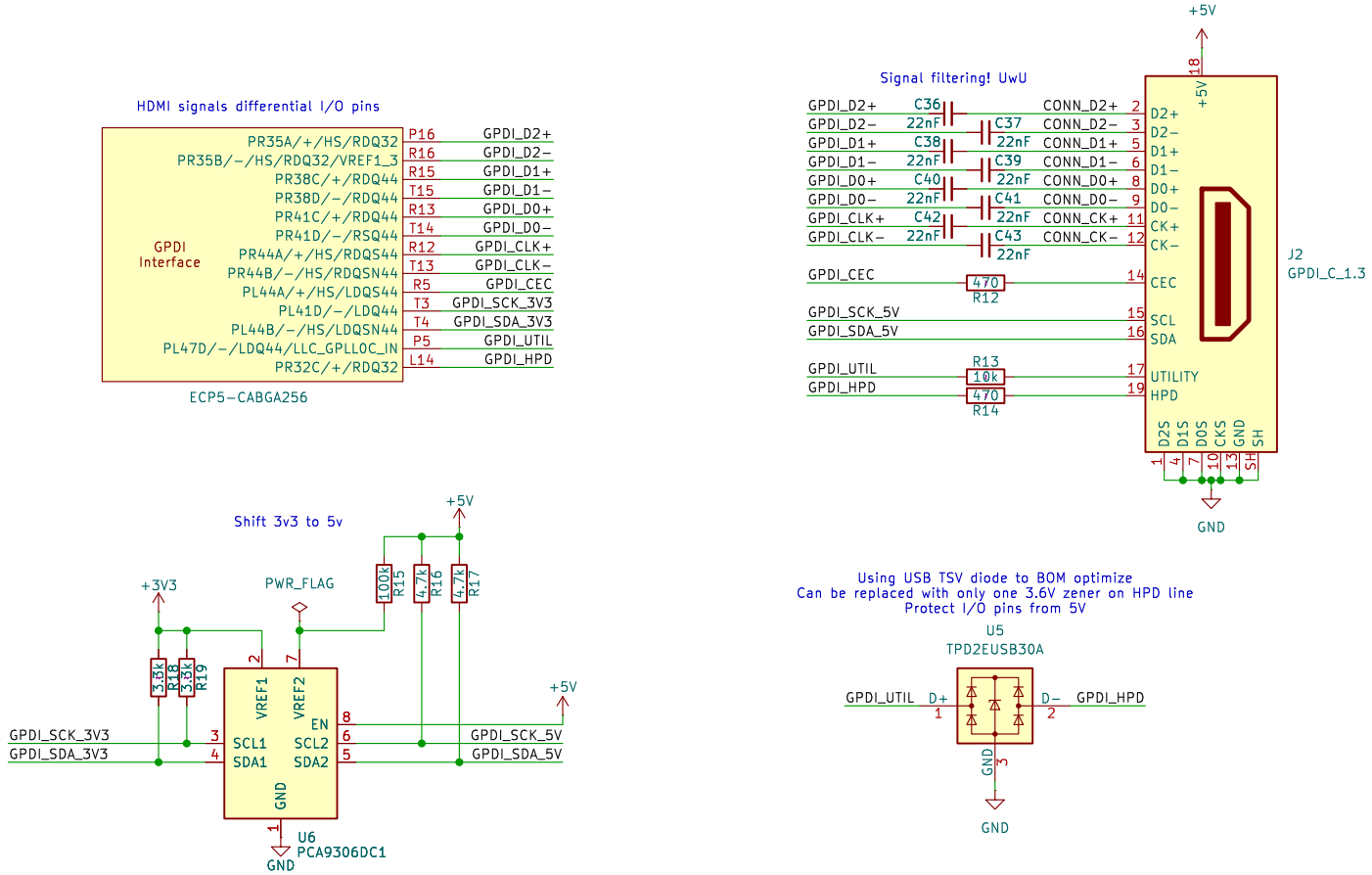

License: Solderpad
https://github.com/cheyao/icepi-zero
Chengyin Yao (cheyao)

Sheet: /GPDI/
File: gpdi.kicad_sch

Title: Icepi Zero

Size: A4	Date: 2025-10-10	**Rev: v1.3**
KiCad E.D.A. 9.0.7		Id: 3/8

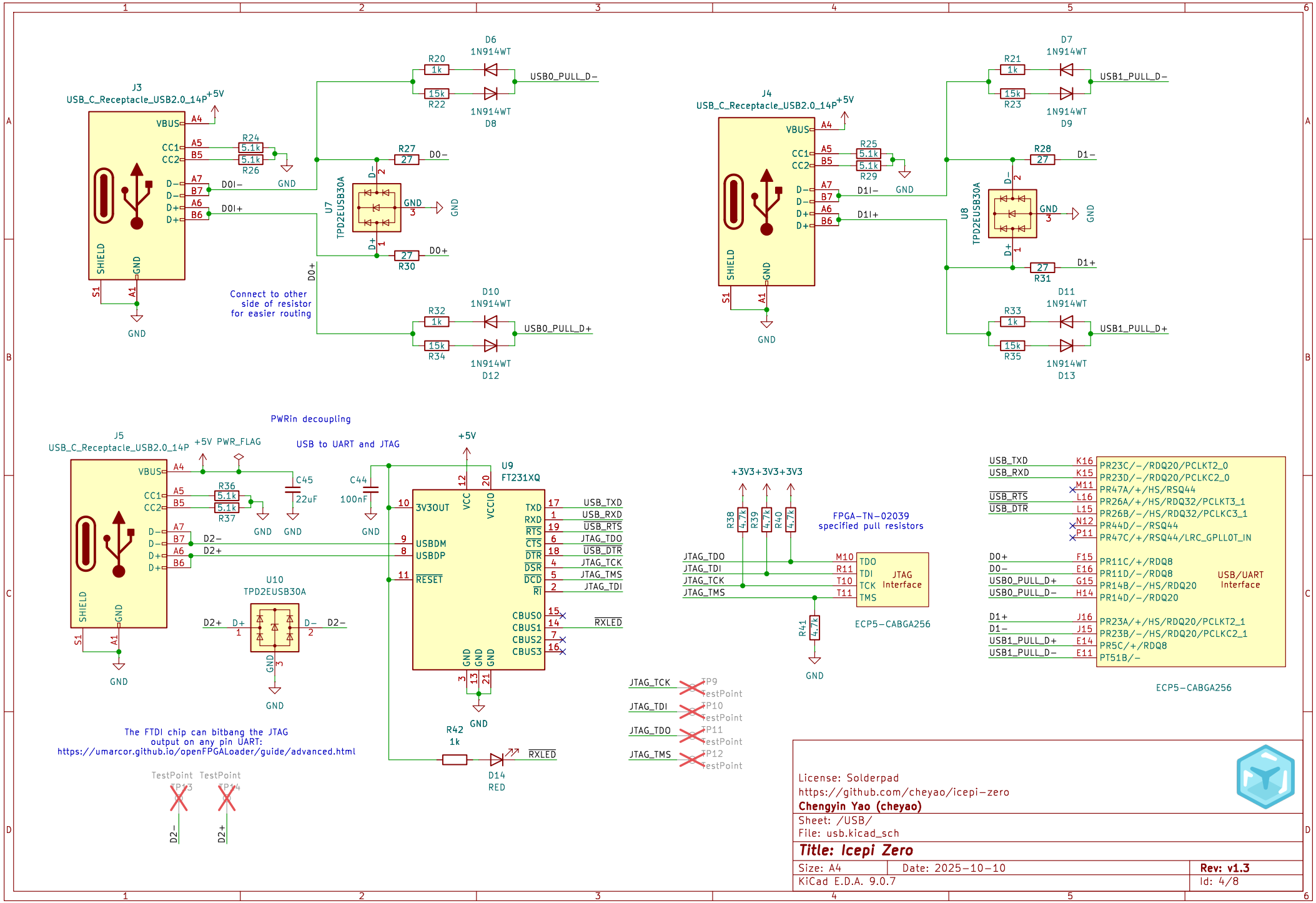

License: Solderpad
https://github.com/cheyao/icepi-zero
Chengyin Yao (cheyao)

Sheet: /USB/
File: usb.kicad_sch

Title: Icepi Zero

Size: A4	Date: 2025-10-10	**Rev: v1.3**
KiCad E.D.A. 9.0.7		Id: 4/8

256MiB Memory
Can be replaced by digikey 512MiB Memory there is the $$$

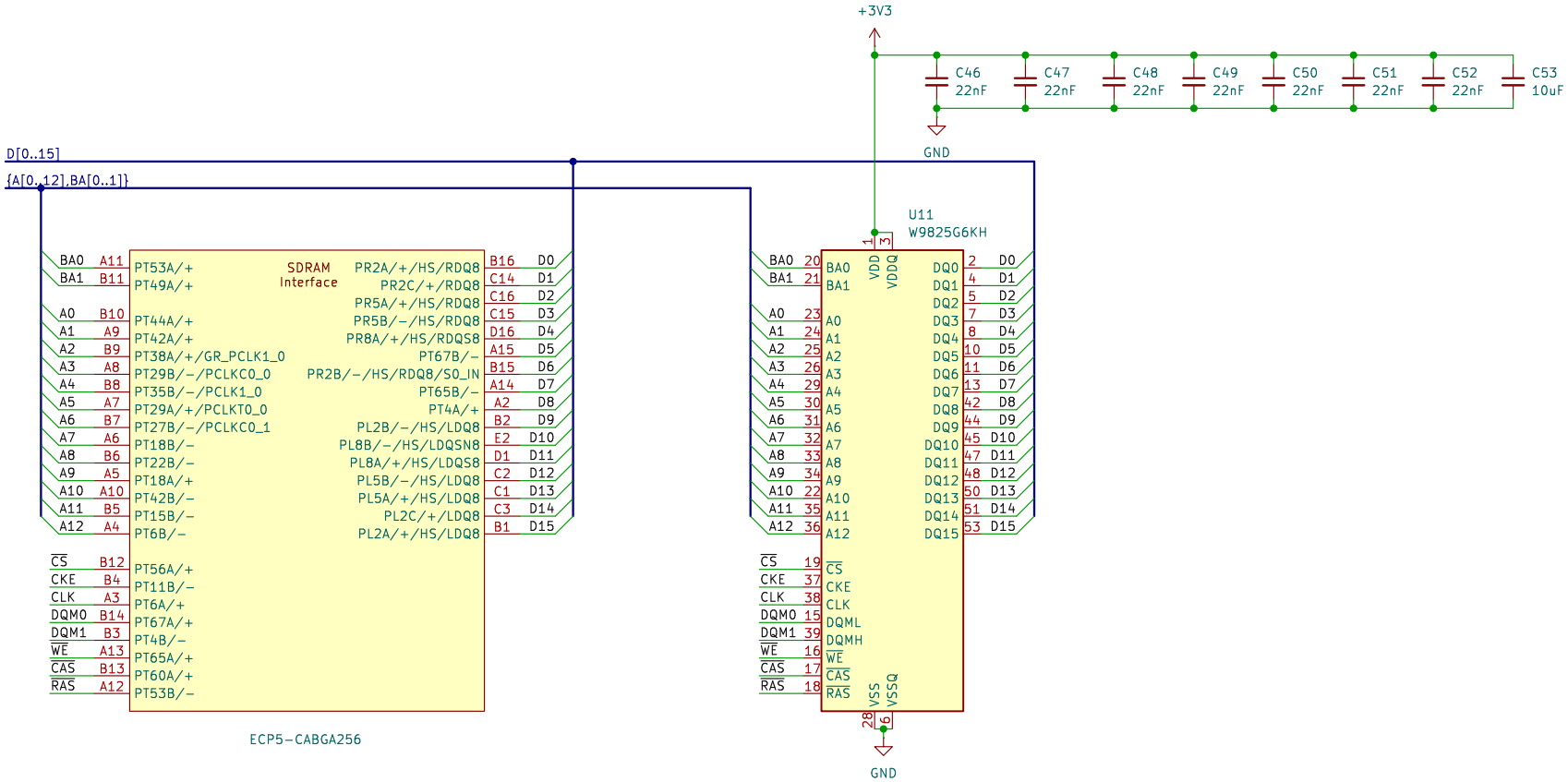

License: Solderpad
https://github.com/cheyao/icepi-zero
Chengyin Yao (cheyao)

Sheet: /SDRAM/
File: sdram.kicad_sch

Title: Icepi Zero

Size: A4	Date: 2025-10-10	**Rev: v1.3**
KiCad E.D.A. 9.0.7		Id: 5/8

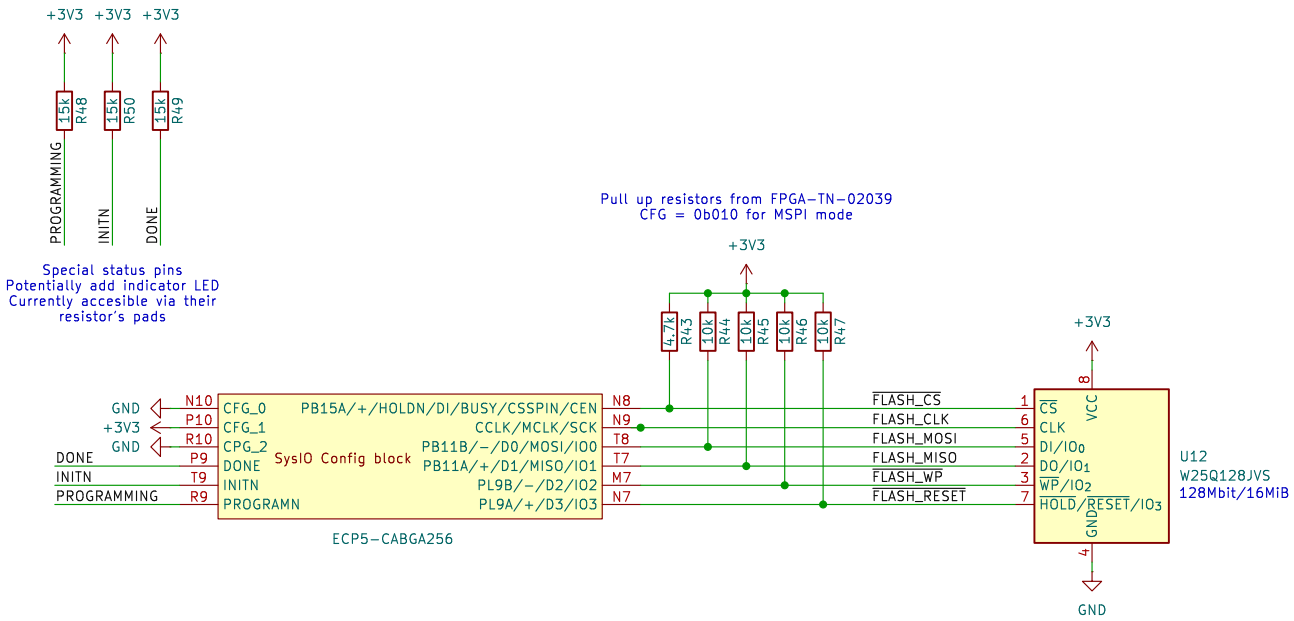

License: Solderpad
https://github.com/cheyao/icepi-zero
Chengyin Yao (cheyao)

Sheet: /Flash/
File: flash.kicad_sch

Title: Icepi Zero

Size: A4	Date: 2025-10-10	**Rev: v1.3**
KiCad E.D.A. 9.0.7		Id: 6/8

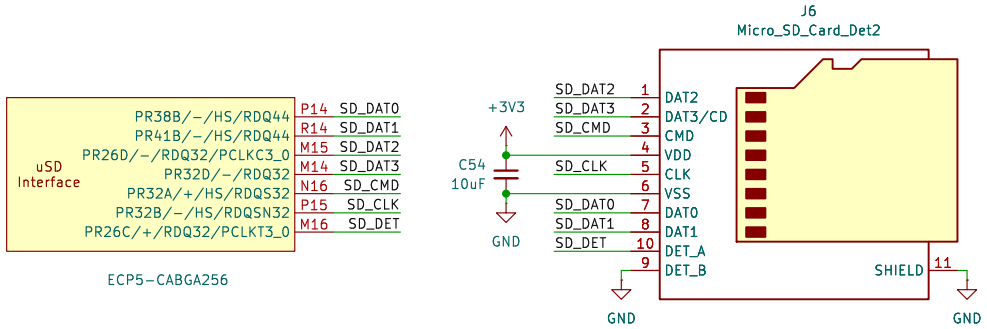

License: Solderpad
https://github.com/cheyao/icepi-zero
Chengyin Yao (cheyao)

Sheet: /uSD/
File: sd.kicad_sch

Title: Icepi Zero

Size: A4	Date: 2025-10-10	**Rev: v1.3**
KiCad E.D.A. 9.0.7		Id: 7/8

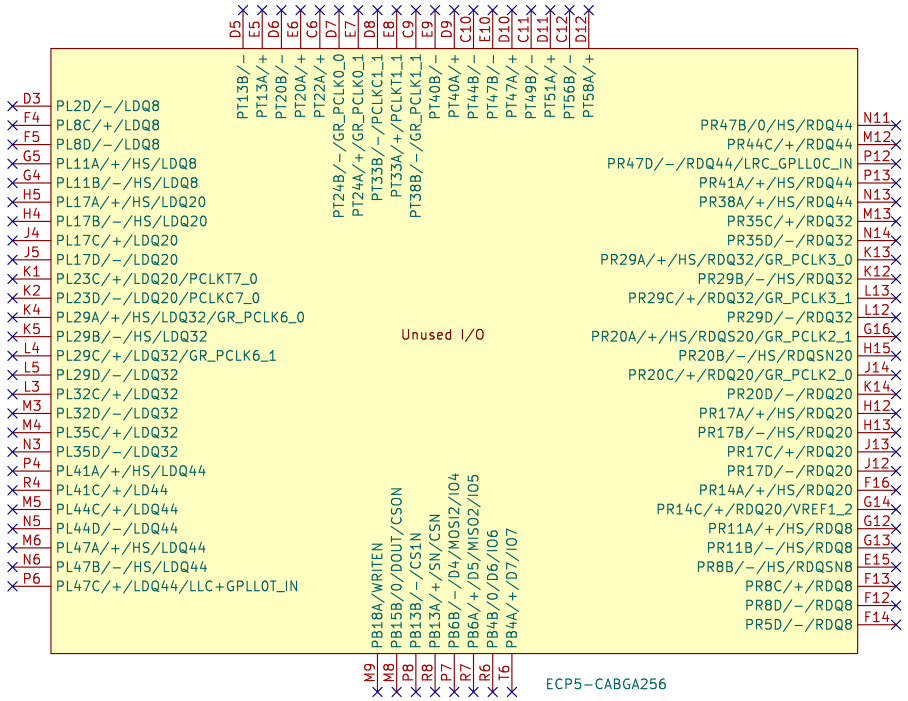

License: Solderpad
https://github.com/cheyao/icepi-zero
Chengyin Yao (cheyao)

Sheet: /Unused IO/
File: io.kicad_sch

Title: Icepi Zero

Size: A4	Date: 2025-10-10	**Rev: v1.3**
KiCad E.D.A. 9.0.7		Id: 8/8