LUNACYCLE

Bafang BBSHD 1000 Watt

Instructions Manual

CONTENT

Important Notice 4

For your Safety 5

Note 6

1 Drive Unit (MM G32.1000) 7

1.1 Advantages 7

1.2 Scope of Application 7

1.3 Product Naming Protocol 7

1.4 Main Techinialc Parameters 8

1.5 Drive Unit Structure and Dimensions 9

2 System Installation 10

2.1 List of Tools to be used 10

2.2 Component Names 11

2.3 Display Installation (DP C10.UART) 12

2.4 Auxiliary Keypad Installation 13

2.5 Battery Rail Installation 15

2.6 External Speed Sensor Installation SR SD02.01 15

2.7 Drive Unit Installation 18

3 System Cabling 25

3.1 Connection of the Battery Cable to the Drive unit 25

3.2 Connection of the Speed Sensor to the Drive unit 25

3.3 Connection of the EB-BUS to the Drive unti 26

3.4 Connection of the Headlight Cable to the Drive Unit 26

3.5 Connection of the Headlight to the Drive Unit 27

4 Battery (Optional) 39

4.1 Using the Battery Properly 40

4.2 Charging the Battery 40

4.3 Battery Capacity Display 41

4.4 Battery Health Indication 41

4.5 Battery Installation 42

5 Display (DP C10.UART) 43

6.1 Specifications and Parameters of the Display 43

6.2 Appearance and Dimensions 43

6.3 Function Overview and Key Definations 44

6.4 Normal Operation 46

6.5 Parameter Setting 48

6.6 Error Code Definitions 55

6 List of Materials 56

7.1 Display Unit-DP C10.UART 56

7.2 Drive Unit -MM G32.1000 56

7.3 Cables 58

7 Service and Warranty Policy 59

Notes 60

IMPORTANT NOTICE

- To avoid any harms to riders, before assemble the HD motor you must confirm that the bike frame has high mechanical intensity.
- The Dealer Manual is to be used by professional e-bike mechanics. Dealers who have not received training on electric bicycle assembly shall not attempt to assemble parts and components by following the Dealer Manual.
- If in doubt about any part of the manual, do not attempt to install the product. Please consult the local sales office or an electric bicycle dealer for help.
- Make sure you read all of the installation manuals delivered with the product.
- Do not disassemble or modify the product unless specified by the Dealer Manual.
- The Dealer Manual is available on our website (www.szbaf.com).
- The dealer shall observe the laws and regulations of the region, the state and the country where the product is sold.

Make sure you have read this Dealer Manual carefully in order to use the product properly.

FOR YOUR SAFETY

When installing this product, be sure to follow the instructions given in the manual!

It is recommended that you use only genuine BAFANG parts at all times. Serious injury may result if loose or faulty bolts and nuts suddenly come off.

If the product is improperly adjusted, accidents and serious injury can occur.

- When performing maintenance operations (for example parts replacement), be sure to wear goggles or eye protection.
- Please refer to the website www.szbaf.com or contact the dealer for information on the product not covered by this manual.
- Keep this Dealer Manual in a safe place for later reference.

Inform the purchaser about the following issues:

- Giving too much of your attention to the e-bike display while riding can lead to an accident.
- It is important to check that the wheels are properly atted to the bicycle before commencing riding. If the wheels are not securely attached fixed serious injury may result.
- When riding a pedal-assisted electric bicycle, you should be fully familiar with the starting-off characteristics of the e-bike before riding it. If the e-bike starts off suddenly, accidents may result.
- It is important to turn on the lights when riding in the evening and at night.

Instructions on e-bike installation and maintenance

- When cabling the product or installing the parts onto the e-bike, be sure to disconnect the battery. Not doing so may result in electric shock.
- When installing this product, be sure to follow the instructions given in the manual. If bolts and nuts are not tightened correctly or if the product is damaged, the e-bike may suddenly fall over and serious injury may result.
- The frequency of maintenance will vary depending on the usage of the e-bike. The chain should be cleaned periodically using an appropriate chain cleaner. Do not use alkaline or acidic cleaning agents to remove rust under any circumstances. If such cleaning agents are used, they may damage the chain and serious injury may result.

NOTE

Important information for the purchaser:

- Please follow instructions given in the manual for your riding safety.
- Examine the battery charger regularly for damage, especially the cable, plug and housing. If the battery charger is damaged, it must not be used until it has been repaired.
- Please follow the guidance given by the safety supervisor or the instructions indicated in the manual when using the product. This product is not intended for use by persons (including children) with reduced physical, sensory or mental capabilities or persons lacking experience and knowledge in using the product.
- Do not allow children to play near the product.
- Please consult the nearest dealer for any errors or problems.
- Do not modify the system. Doing so may lead to malfunction of the system.
- For information on product installation and adjustment, please consult your dealer.
- The product is designed to be fully waterproof to withstand wet weather riding conditions. Howe ver, do not deliberately immerse it in water.
- Do not clean the bicycle with a high-pressure water spray. If water gets into any of the compo nents, operation problems or rusting may result.
- When transporting the product on a car in wet weather, remove the battery and put it in a safe place to stop it from getting wet due to the rain.
- Handle the product carefully and avoid subjecting it to any strong shocks.
- Some important information given in this manual may also be found on the product labels.
- When buying a spare key for the battery, be sure to provide the number on the battery key. Please write down the number and keep it in a safe place.
- Use a wrung-out damp cloth to clean the battery and the plastic housing.
- For any questions regarding the maintenance and use of the product, please contact your dealer.
- Normal wear and tear due to normal use and aging is not within our scope of quality guarantee.
- Please contact the seller for software updates. The newest information on software is available on the official Bafang website: www.szbaf.com.

1 DRIVE UNIT (MM G32.1000)

1.1 Advantages

- Use of pedal-assist speed measurement and wheel-speed measurement; the system has a dual feedback protection of the speed signals to ensure safety and reliability of the system
- High starting torque, maximum torque of more than 160 N.m, especially suitable for hill climbing
- High effciency, low power consumption
- Low noise, smooth operation

1.2 Scope of Application

The drive unit works properly in the following environ mental conditions:

- Ambient temperature: -20 to + 55℃ ;
- Relative humidity: 15-95 % RH;

The function of the product is impaired by the presence of any major caustic gas, any medium that affects the product' s electrical insulation properties or any high-intensity magnetic field.

1.3 Product Naming Protocol

There is a badge on the housing, showing information as follows:

MM G32.1000	15100001	48V	1000W
A	B	C	D

A MM G32.1000 Name of the drive unit

B 1501 Date of production, January 2015 in this example; 0001 Production serial number, ran ging from 0000 to 9999; 0001 is the production serial number of the first motor

C 48V Rated voltage suitable for 36V drive systems

D 1000 W Rated motor power

1.4 Main Technical Parameters

Rated voltage (DCV)	36	/	48		
Rated power (W)	750	/	750	1000	1250
Rated efficiency (%)	≥80%				
Rated rotating speed (rpm)	130~150				
Maximum torque (N.m)	≥160				
Chain wheel	46T				
Optional chain guard	full chain guard / P-shaped chain guard				
Weight (Kg)	3.9				
Sensors	pedal assist speed sensor, and bicycle wheel speed sensor and temperature sensor				
Noise (dB)	<55				
Working environment	-20° C~55° C				
Dust-proof/ water-proof grade	IP65				
Certification	CE/ UL / ROHS / EN14764				
Functions	Light function: DC 500mA/6V headlight & rearlight				

1.5 Drive Unit Structure and Dimensions

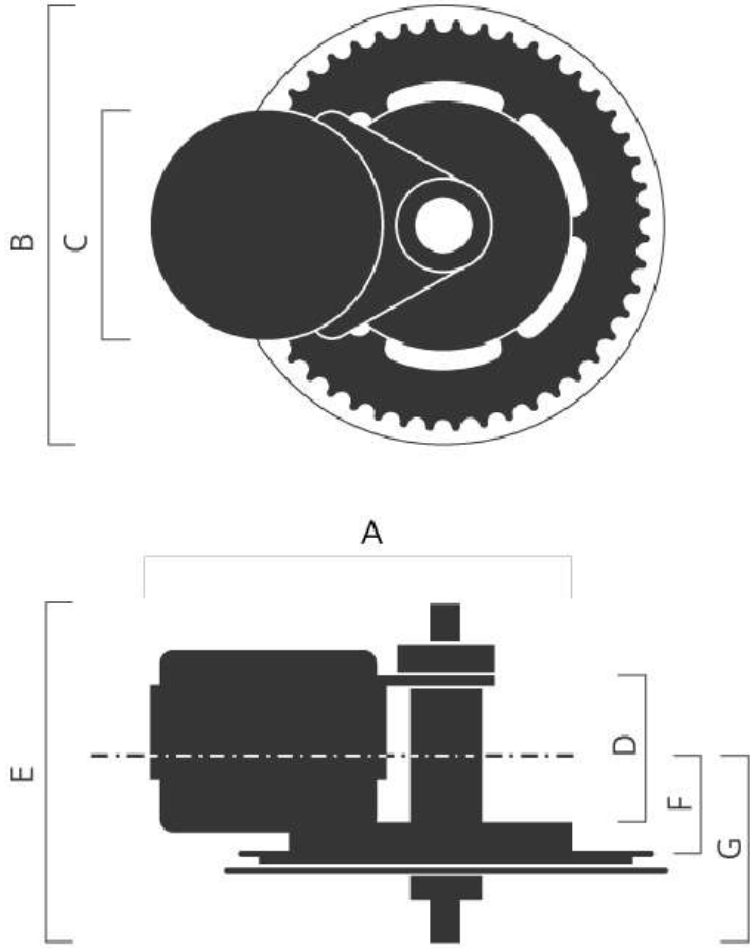

Dimension A	215mm
Dimension B	ϕ 210mm（46T）
Dimension C	123mm
Dimension D	68 / 100 / 110 / 120mm
Dimension E	175/190/200/210mm
Dimension F	50 / 65 / 70 / 75mm
Dimension G	88 / 103 / 108 / 113mm

2 SYSTEM INSTALLATION

2.1 List of Tools to be used

Components	Use of the Tools	Tools
Display	To tighten M3 & M4 screws	Internal hex wrench
Drive Unit	To fasten M6 & M8 & M33 bolts and nutsonto the frame adapter and the drive unit	Internal hexagonal wrench and two dedicatd tools
	To fasten M8 screws on the crank mounting	Internal hexagonal wrench
Speed Sensor	To install the iron magnet	Straight slot screwdriver
	To tighten M5 screws of the speed sensor	Phillips screwdriver
Battery		Internal hex wrench

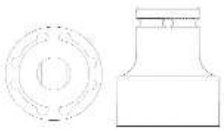

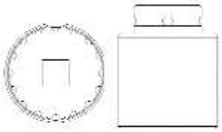

2.2 Component Names

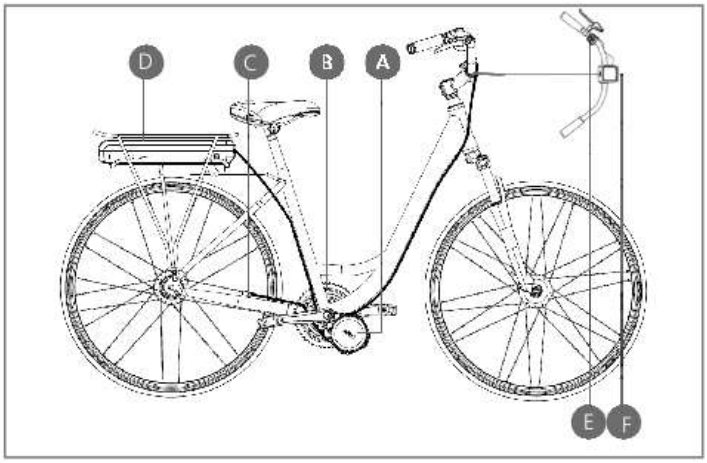

- A Drive unit
- B Front chain wheel
- C External speed sensor
- D Battery(Optional)
- E Auxiliary keypad
- F Display

2.3 Display Installation (DP C10.UART)

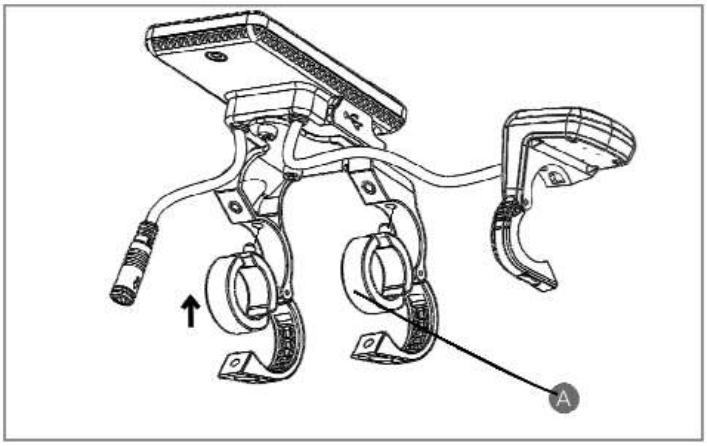

A Rubber clamping ring
Left and right display clamps for the φ22.2 handlebar:
Left and right display clamps for the φ25.4 handlebar:

One or two rubber clamping rings may be needed depending on the diameter of the handlebar (the applicable handlebar specicatons are φ22.2, φ25.4 and φ31.8).
Open the left or right display clamp, and insert one or two clamping rings into the right position of the display clamp as shown in the picture above.

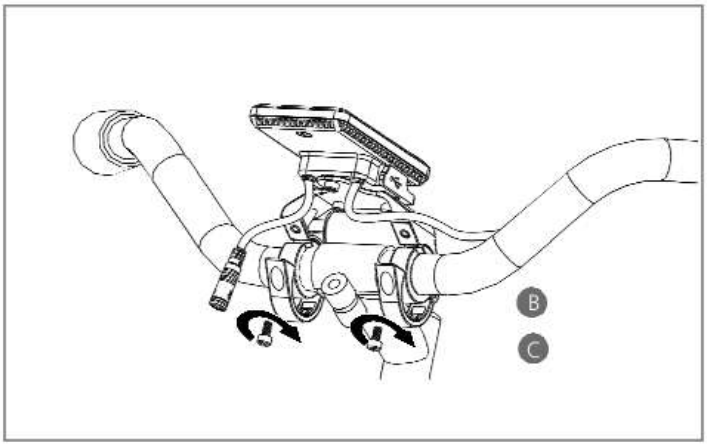

B display clamp

C hex socket head cap screws M4×8

Insert the clamping ring(s) to each of the two display clamps and mount them onto the handlebar. Use an interanl hex wrench to fasten the left and right clamps onto the handlebar.

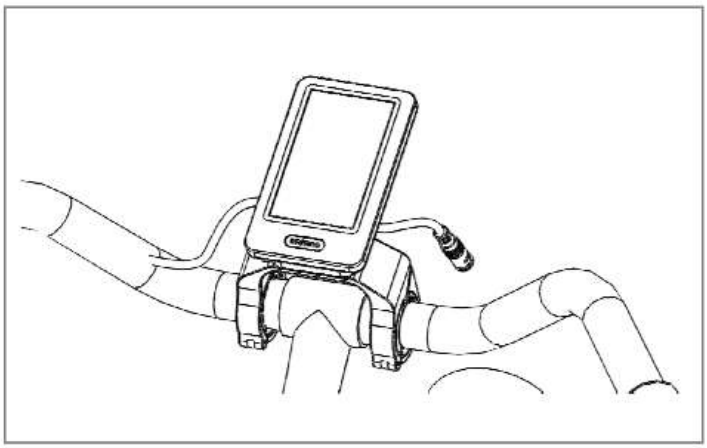

Adjust the angle of the display so that you can easily see the display screen when riding. After the angle has been adjusted, tighten the screws to the specified torque.
Tightening torque: 1 N.m

2.4 Auxiliary Keypad Installation

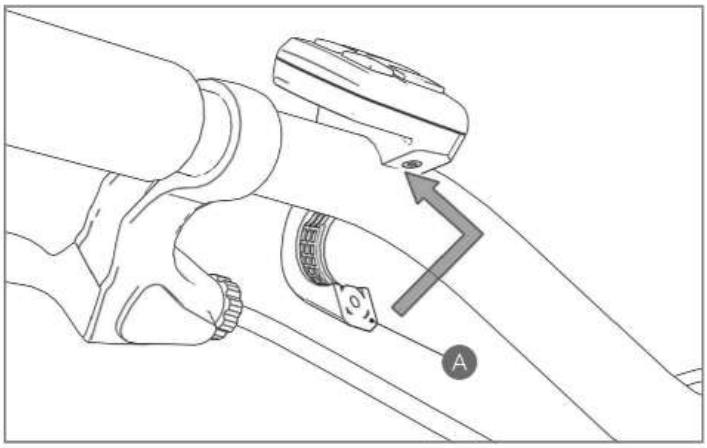

A keypad clamp

Open the auxiliary keypad and assemble it onto a position that is easy for operation. Adjust the angle of the auxiliary keypad to ensure that the keypad is easy to see seen during riding.
(Applicable to the handlebar whose external diameter is φ22.2mm)

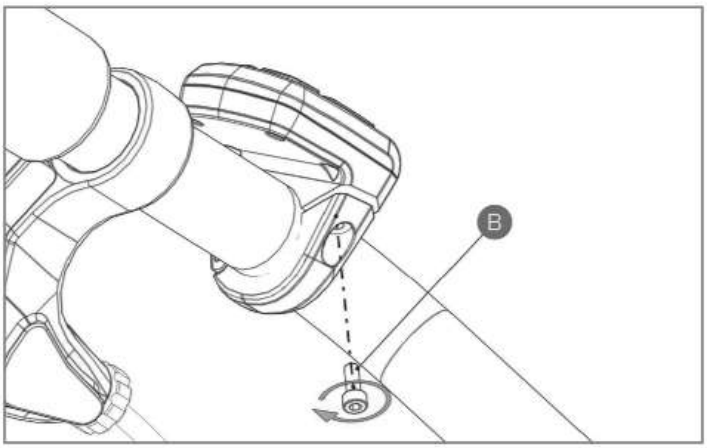

B hex socket head cap screw M3×8

Fix the keypad onto the handlebar with a screw. Then tighten the fixing screw with an internal hex wrench. Tightening torque:1 N.m

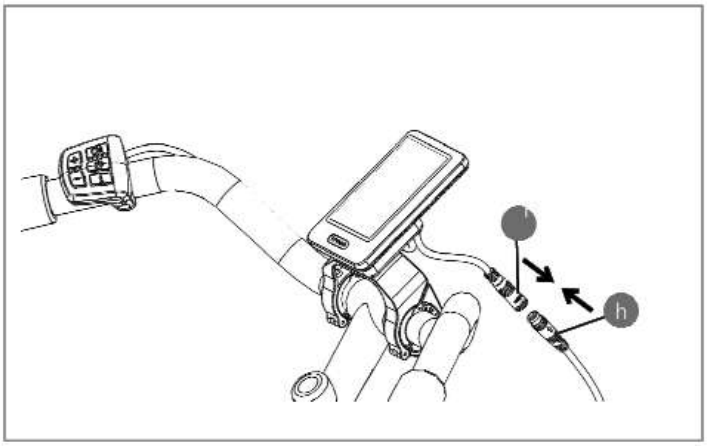

H female connector at the display

h male connector at the EB-BUS

Match the female connector at the display with the male connector at the EB-BUS as shown in the picture above.

2.5 Battery Rail Installation

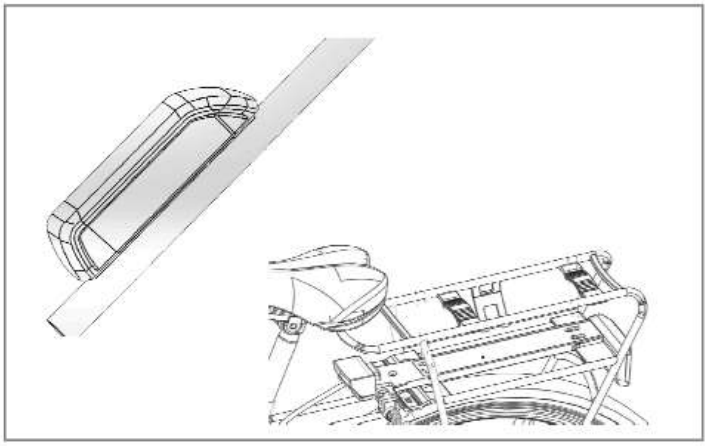

Align the mounting holes of the carrier with the mounting holes of the battery rail. Fasten the battery rail onto the battery carrier with hex socket head screws (M5).
Tightening torque: 2 N.m
Choosing a corresponding battery and under the help of professional mechanics or local dealers to assemble it.

2.6 External Speed Sensor Installation S R SD02.01

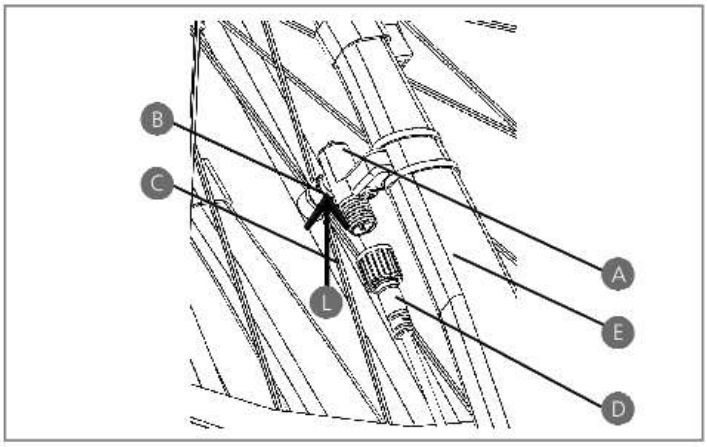

- A external speed sensor
- B magnet unit
- C spoke
- D cable of speed sensor
- E chain stay

Before installing the speed sensor, please make sure the gap between the speed sensor and the magnetic unit is between 3 and 5 mm.

SYSTEM INSTALLATION

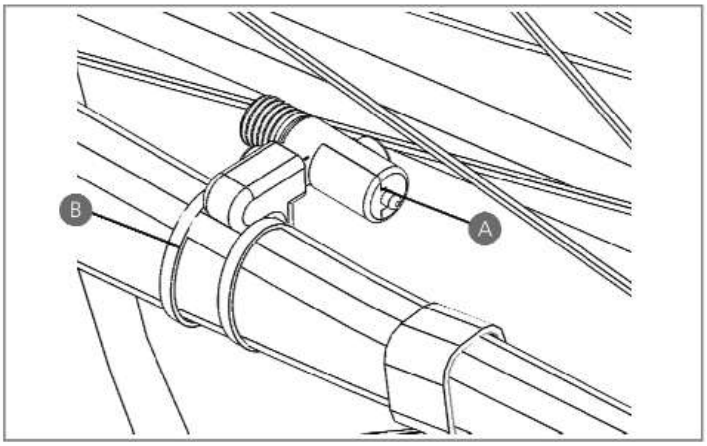

A external speed sensor
B cable ties

If the gap is within the specified range, use the mounting bolt to fix the speed sensor.

If the gap is more than 25 mm, please put spacers between the sensor and the chain stay boss to reduce this gap.

Tightening torque: 1.5-2 N.m

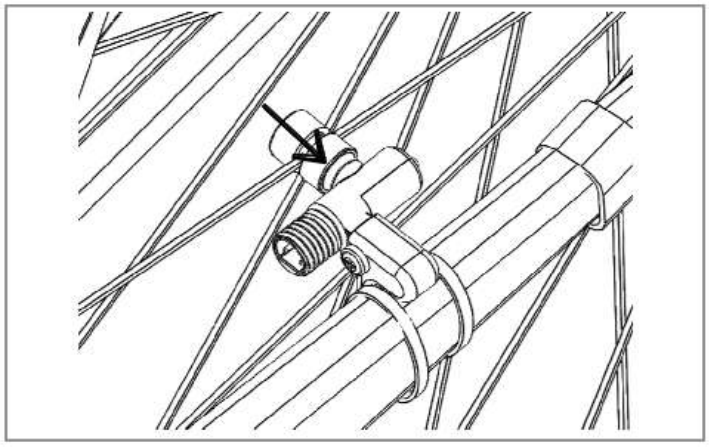

Arrange the speed sensor and the magnet unit as shown in the picture above. When installing the magnet unit, make sure its center is aligned with the center of the speed sensor's induction zone.

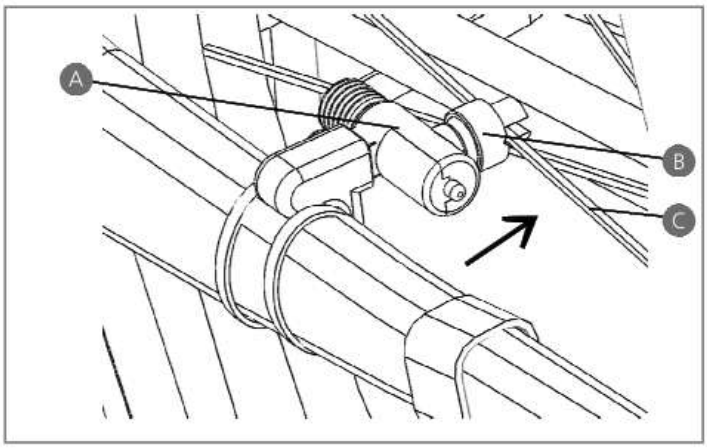

A external speed sensor
B magnet unit
C spoke

Arrange the speed sensor and the magnet unit as shown by the picture above. Mount the magnet unit onto the spoke.

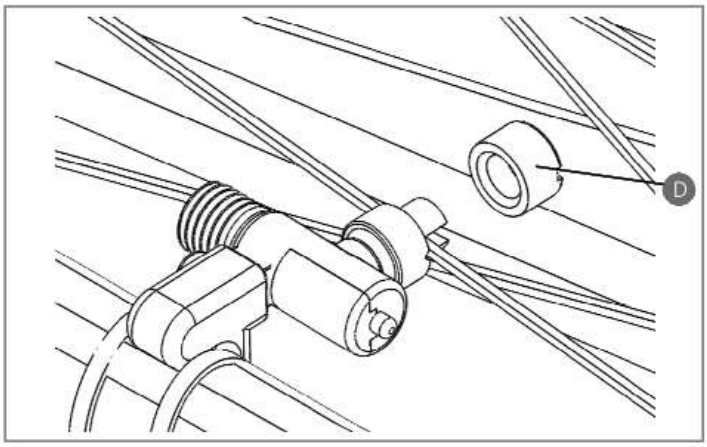

D Mounting nut of the magnet

Tighten up the mounting nut with a straight slot screwdriver. Tightening torque: 1.5-2 N.m

2.7 Drive Unit Installation

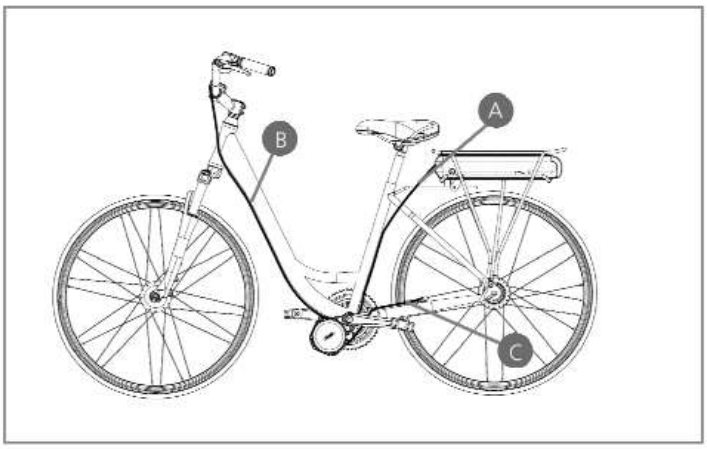

A battery cable

B EB-BUS

C external speed sensor cable

Cables should be arranged in advance according to the e-bike type and the cabling system before installing the drive unit.

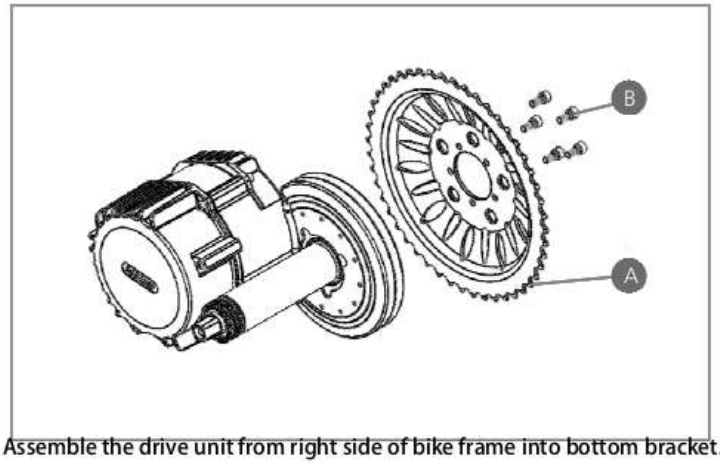

A chain wheel

B 5-M5 screw

Assemble the drive unit from right side of bike frame into bottom bracket.

Pay attention to the outgoing directions of the cables. Please note that the cables should not be squeezed by the drive unit.

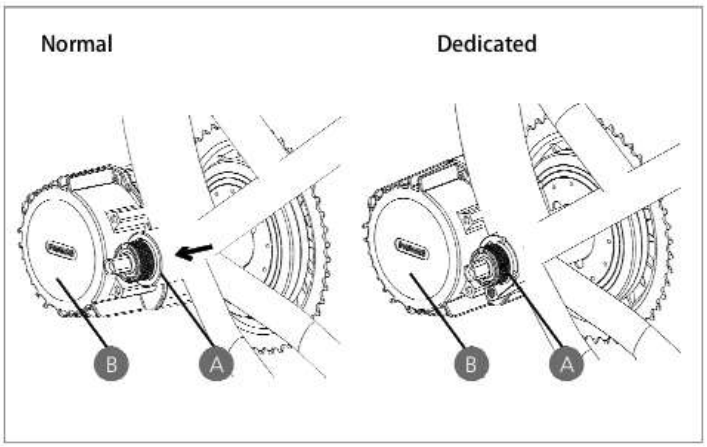

A bottom bracket

B drive unit

Dedicated bottom bracket internal hole, machining it to Φ 33.6mm
Assemble the drive unit from right side of bike frame into bottom bracket.

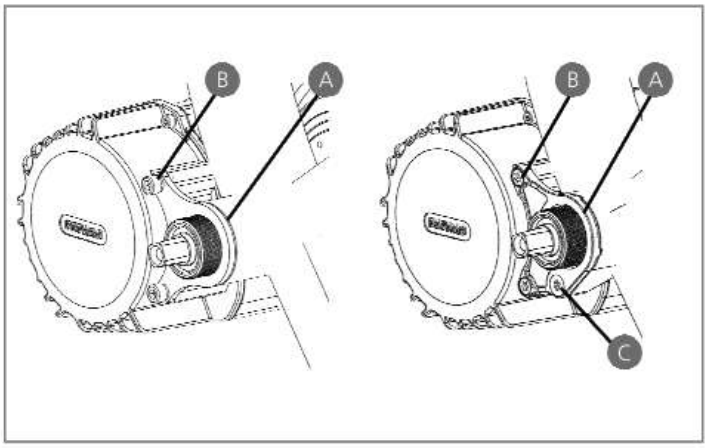

A fixed holder

B 2-M6 screw

C M8 screw(dedicated BB)

Put the fixed holder on the bottom bracket. Fasten it with M6 screw. Tightening torque: 10 N.m
Dedicated: fasten it with M8 screw. Tightening torque: 20 N.m

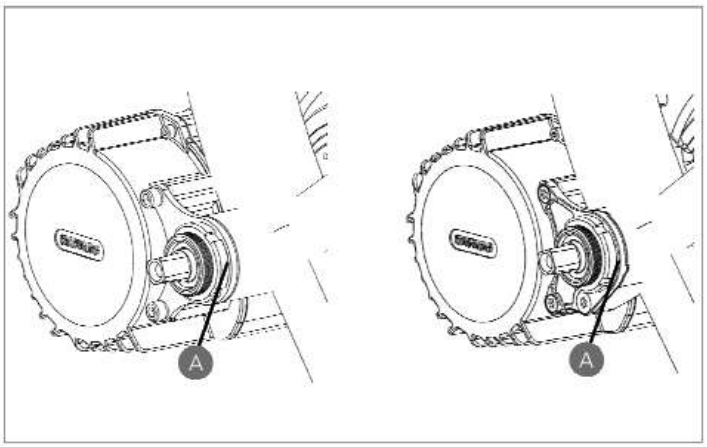

A M33 steel nut

Fasten the dedicated M33 steel nut required torque. Tightening torque: 50 N.m

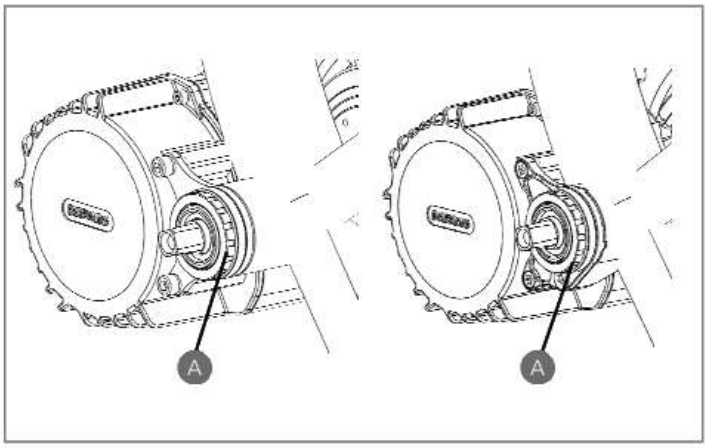

A M33 aluminum nut

Fasten the dedicated M33 aluminum nut tool to required torque. Tightening torque: 25 N.m

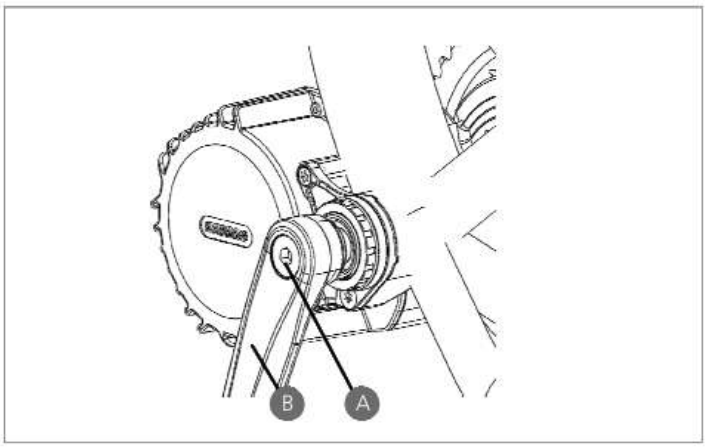

A M8*15 screw

B L/R crank

Assemble the R/L cranks on the main shaft. Lock it with M8 screw. Tightening torque: 35-40 N.m

3 SYSTEM CABLING

3.1 Connection of the Battery Cable to the Drive Unit

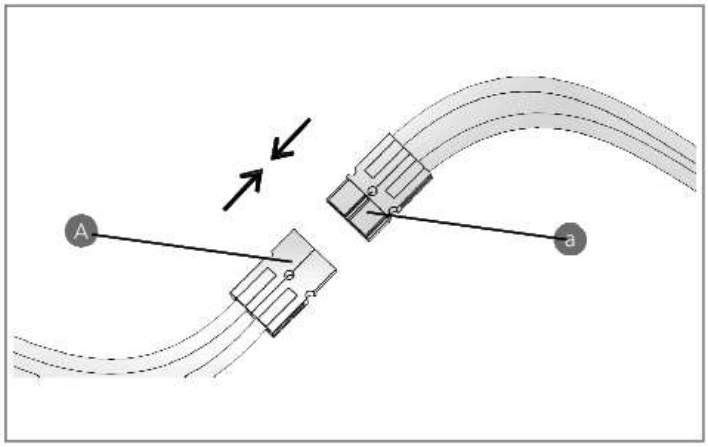

- A female connector for the positive cable at the battery(optional)
- a male connector for the negative cable at the drive unit(optional)

The power bus, which is made up of a positive battery cable, a negative battery cable and battery communication cables(optional), is connected to the battery cables at the drive unit.

3.2 Connection of the Speed Sensor to the Drive Unit

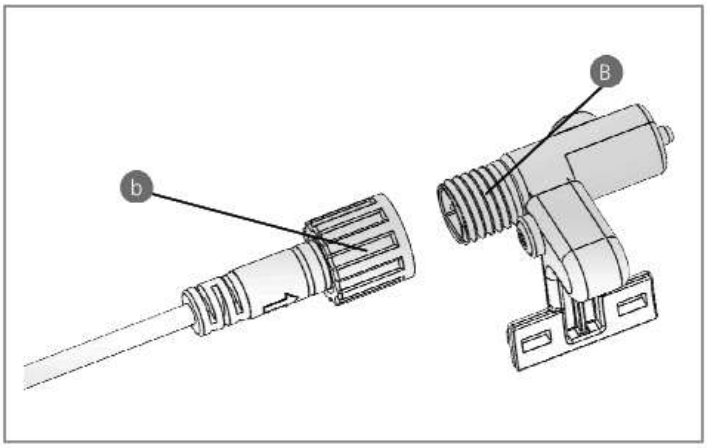

- male connector at the speed sensor
- b female connector at the drive unit for connection to the speed sensor

Link the male connector at the external speed-detecting sensor to the female connector for the external speed-detecting sensor cable at the drive unit.

3.3 Connection of the EB-BUS to the Drive Unit

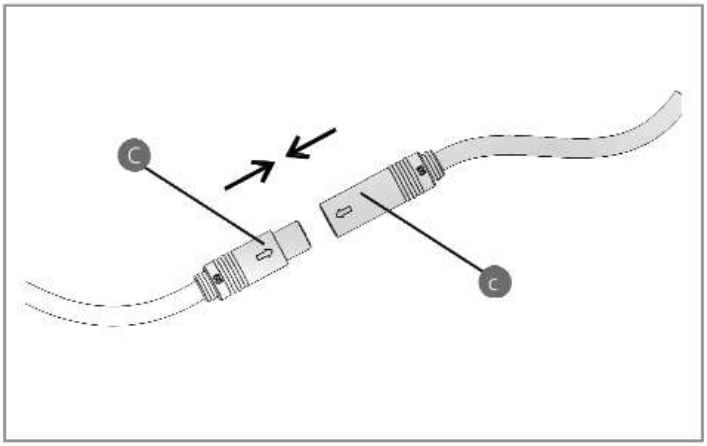

C male connector at the EB-BUS

c female connector at the drive unit for connection to the EB-BUS

Link the EB-BUS cable to the EB-BUS connector at the drive unit.

3.4 Connection of the Headlight Cable to the Drive Unit(Optional)

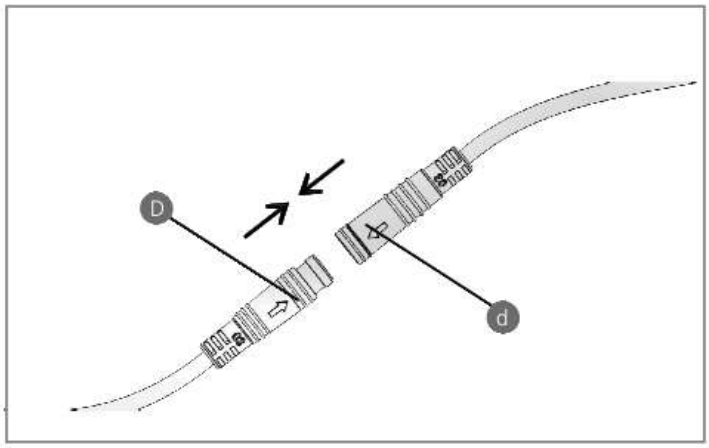

D female connector at the headlight cable

male connector for the headlight at the drive unit

Link the headlight cable to the connector for the headlight at the drive unit.

3.5 Connection of the Headlight to the Drive Unit

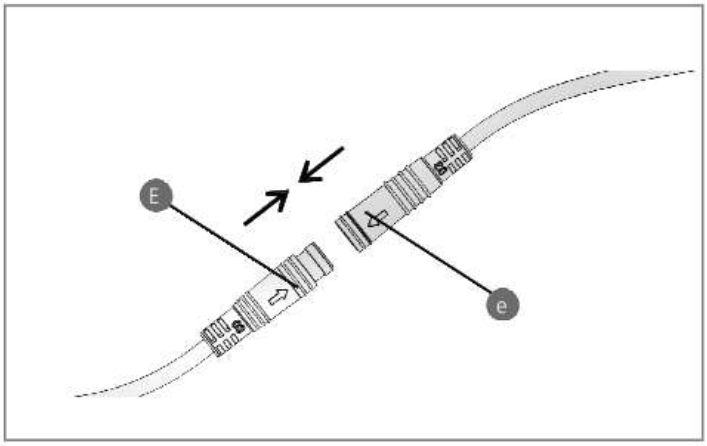

- ● female connector at the headlight cable
- e male connector for the headlight at the drive unit

Link the headlight cable to the connector at the drive unit.

4 BATTERY (OPTIONAL)

Precautions

- If any liquid leaking from the battery gets into your eyes, rinse immediately with clean water (e.g. tap water). Seek medical advice immediately; otherwise the battery liquid may damage your eyes.
- Do not recharge the battery in places with high humidity or outdoors. Doing so may result in electric shock.
- Do not insert the plug while it is wet. Plug and socket need to be dry, otherwise electric shocks may result.
- If the battery does not become fully charged after 6 hours, unplug the battery from the outlet imme diately and stop charging. Not doing so may cause overheating, rupture, or ignition of the battery.
- Do not use the battery if it has any noticeable damage. Doing so may cause rupture, overheating or malfunction.
- The battery may only be used in the temperature ranges states below. Do not use the battery in temperatures outside these ranges. If the battery is used or stored in temperatures outside these ranges, fire, injury or malfunction may occur.
- 1.Temperature for discharging: －10℃ to 50℃
- 2. Temperature for charging: 0℃ to 40℃

Danger

- Do not deform, modify or disassemble the battery. Do not apply solder directly to the battery. Doing so may cause leakage, overheating, rupture or ignition of the battery.
- Do not leave the battery near sources of heat (e.g. heaters). Do not heat the battery or throw it into a fire. Doing so may cause rupture or ignition of the battery.
- Do not subject the battery to strong shocks or th row it. If this is not observed, overheating, rupture or ignition of the battery may occur.
- Do not immerse the battery into fresh water or seawater, and do not allow the battery terminals to get wet. Doing so may cause overheating, rupture or ignition of the battery.
- Only use the specified charger. Not doing so may cause overheating, bursting, or ignition of the-bat tery. Observe the components during the specified charging conditions when charging the battery.
- Do not short-circuit the discharge port with metal, or else it may cause overheating, rupture or ignition of the battery.
- Do not leave the battery in a place exposed to direct sunlight, inside a vehicle on a hot day or in other hot places. Doing so may result in battery leakage.
- If any leaked fluid gets on your skin or clothes, wash it off immediately with clean water. The leaked fluid may damage your skin.
- Store the battery in a safe place out of the reach of children and pets.

4.1 Using the Battery Properly

The battery can be charged at any time no matter how much power is left. However, in the following cases, the battery needs to be fully charged. Make sure you use the specified charger to charge the battery.

- The battery is usually not fully charged for the convenience of transport. Make sure the battery is fully charged before using the battery.
- If it is not intended to use the battery for a long time, make sure the e-bike battery is charged before storage and that is charged at least once every twelve months thereafter. Do not leave the battery completely discharged.
- Once you have begun to use the battery, please have it charged at least once every two weeks.

If the battery is completely discharged, charge it as soon as possible. If you do not charge the battery, it will be damaged.

4.2 Charging the Battery
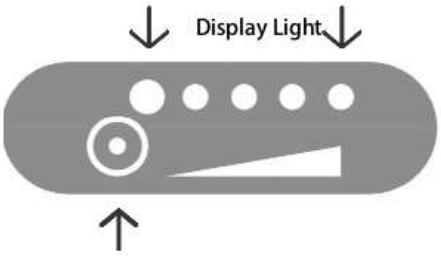
- When using the battery for the first time, check that the battery has not run low in transport or storage.
- If it not intended to use the battery for a long time, charge the battery regularly to avoid excessi ve battery discharge.
- Please charge the battery as soon as possible before it runs out; over-discharge can cause permanent damage to the battery.
- No matter how much power is left, the battery can be charged at any time. However, the speci fied charger must be used to avoid overcharge of the battery.