BOMBARDIER

CHALLENGER 300

FLIGHT CREW OPERATING MANUAL

CSP 100-6

Oct 31/2008
Revision 11

VOLUME 2

MODEL BD-100-1A10

CUSTOMER SUPPORT PUBLICATION No. 100-6

Table of Contents

Forward 00-02-01
Introduction 00-02-01
The Manual 00-02-01
Numbered Changes To The Manual 00-02-01
Pagination 00-02-02
Production Modification Data 00-02-02
Addresses 00-02-02
Abbreviations and Acronyms 00-02-03
Conversion Factors 00-02-12
Temperature Conversion Table 00-02-13
Index 00-03-01
Systems Description 00-04-01

FORWARD

The Challenger 300 Flight Crew Operating Manual, Volume 2 is designed to provide the flight crew with readily accessible operational information For optimum utilization of the manual, this introduction should be read carefully.

The purpose of the Operating Manual is to:

- Standardize terminology and behavioral patterns.
- Provide reference material for self-teaching.
- Provide information on airplane systems and operations that are controlled and revised.

Throughout this manual, the experience of the typical crew has been recognized and for this reason, basic system principles have been omitted. For example, the text is not intended to teach the crew how to fly an airplane, but to enable an experienced crew to operate the Challenger 300 safely and proficiently.

All data is based on the fact that the airplane is serviceable, all busses are powered and all systems are operational.

For clarity and simplicity, the manual is written in the imperative, in order that the information and operating instructions may be presented in a positive sense and require no interpretation by the user.

INTRODUCTION

The information in this manual is intended to augment the Challenger 300 Approved Airplane Flight Manual and in no manner supersedes any Flight Manual limitations, procedures, or performance data. If any information in this manual should conflict with that in the Approved Airplane Flight Manual, the Approved Airplane Flight Manual shall take precedence.

THE MANUAL

Chapters 1 through 18 of this manual provide the operator of the Challenger 300 with a basic description of the aircraft operating systems from the cockpit controls and indicators to the actuating mechanisms in the systems. No attempt has been made to establish a specific standard aircraft due to the numerous customer options. Therefore, the illustrations and descriptions within this manual are for a “typical” aircraft and may not match a specific aircraft. Specific serialization is shown only when more than one version of the same system is incorporated into production on a nonretrofit basis.

NUMBERED CHANGES TO THE MANUAL

Periodically, Numbered Changes may be issued against this manual. Pages included in Numbered Changes supersede like numbered pages in the Flight Crew Operating Manual. Each page of a Numbered Change will contain a “Change” number located at the lower inside margin of the page. Portions of the text affected by the change are indicated by a vertical bar at the outer margin of the page. The vertical bars may not appear on pages that contain graphs or tables. Additionally, when a “changed” page occurs as the result of a rearrangement of material due to a change on a previous page, no vertical bar will appear.

The List of Effective Pages establishes the current effective date of each page in the Flight Crew Operating Manual and may be used as an instruction sheet for incorporating the latest Numbered Change into the Flight Crew Operating Manual. Information included in the List of Effective Pages states the current “Change” number for each page and the dates of Original issue and Numbered Changes. An asterisk (*) next to a page number indicates the page was changed, added, or deleted by the current change.

PAGINATION

Each chapter of Volume 2 of the Challenger 300 Operating Manual is subdivided into sections categorized by the subject or type material presented.

This permits issuance of small block of revision pages without renumbering and reprinting complete sections of the manual.

Pagination with the Volume Chapter/Section/Page numbering system as follows:

SAMPLE PAGINATION

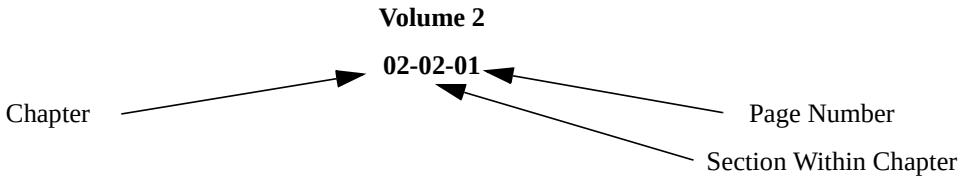

Additional identification data carried in the margin of the page are the date of issue or revision date and the chapter title and subject carried in the masthead.

Blank pages resulting from end of section, back-up pages, color illustrations or illustrations that must be arranged as facing pages are not numbered.

PRODUCTION MODIFICATION DATA

Revisions due to production line modifications (not retrofit) will state airplane effectivity (serial numbers) on the revised pages.

ADDRESSES

Your comments and suggestions concerning this manual are solicited and should be forwarded to:

Bombardier Aerospace

P.O. Box 7707

Wichita, Kansas 67277-7707

Attn: Technical Publications

or

On the internet at www.cic.bombardier.com, then select User Comment from the Technical Publications heading. A user name and password are required to use this option.

ABBREVIATIONS and ACRONYMS

The following abbreviations may be used in cockpit displays, the flight management system or in other descriptions throughout this manual. Abbreviations may be further explained in the chapters where they are used.

A

A/C	Air Conditioning	AGL	Above Ground Level
A/ICE	Anti-Ice	AHC	Attitude Heading Computer
A/P or AP	Autopilot	AHRS	Attitude Heading Reference System
A/S	Air Speed	ALT	Altitude, Altimeter
A/SKID	Anti-skid	ALT	Altitude Hold (PFD/FD)
ac	Alternating Current	ALT CAP	Altitude Capture (PFD/FD)
ACM	Air Cycle Machine	ALT HOLD	Altitude Hold (PFD/FD)
ACP	Audio Control Panel	AMPS	Amperes
ACU	Air Conditioning Unit	ANT	Antenna
ACV	Air Control Valve	AOA	Angle of Attack
ADC	Air Data Computer	ASEL	Altitude Preselect Mode
ADDR	Address	ASYM	Asymmetrical
ADF	Automatic Direction Finder	ATC	Air Traffic Control
ADI	Attitude Director Indicator	ATS	Air Turbine Starter
ADS	Air Data System	ATT	Attitude
AFCS	Automatic Flight Control System	AUTO	Automatic
AFM	Airplane Flight Manual		

B

B/C or BC	Back Course	BOOM	Headset Microphone
BNK	Bank		
BARO	Barometric	BRK	Brake
BAT or BATT	Battery	BRKR(S)	Breaker(s)
BCU	Brake Control Unit	BCU	Brake Control Unit
BIT	Built-in-test	BTL	Bottle
BITE	Built-in-test equipment	BTMS	Brake Temperature Monitoring System
BRT	Bright		

C

C/B or CB	Circuit Breaker	CLK	Clock
CAA	Civil Aviation Authority (UK)	Cm	Centimeters
CAB	Cabin	CMD	Command
CAI	Cowl Anti-Ice	CMPS	Compass
CAL	Calibrate	CMPTR	Computer
CAP	Capture	CO_2	Carbon Dioxide
CAS	Calibrated Airspeed	COMP	Compressor, Comparator
CAS	Crew Alerting System	COND	Condition, Continued
CAT	Category	CONN	Connection

C (Cont)

CAT II	Category II	CPCP	Cabin Pressure Control Panel
CBP	Circuit Breaker Panel	CPCS	Cabin Pressure Control System
CBV	Cross Bleed Valve	CPLT	Copilot
CCP	Cursor Control Panel	CRS	Course
CDU	Control Display Unit	CRZ	Cruise
CKPT	Cockpit	CTR	Center
CKT	Circuit	CTRL	Control
CLB	Climb	CVR	Cockpit Voice Recorder

D

DA	Drift Angle, or Decision Altitude	DEV	Deviation
dB	decibel	DFDR	Digital Flight Data Recorder
DBU	Data Base Unit	DG	Directional Gyro
DC	direct current	DH	Decision Height
dcmp	direct current motor pump	DIFF	Differential
DCP	Display Control Panel	DIM	Dimming
DCPC	Direct Current Power Center	DIR or DCT	Direct
DCU	Data Concentrator Unit	DIS	Distance (to waypoint), Disconnect
Delta P	Differential Pressure	DISC	Disconnect
DECEL	Decelerate	DISCH	Discharge
DECR	Decrease	DISP	Dispatch
DET	Detection	DIST	Distance
DEFL	Defuel	DME	Distance Measuring Equipment
DEG	Degree	DN	Down
DEGRAD	Degrade	DOT	Department of Transport
DEPR	Depressurize	DR	Door
DEPT	Depart	DSPL	Display
DEST	Destination	DU	Display Unit
DET	Detector		

E

EASA	European Aviation Safety Agency	EGT	Exhaust Gas Temperature
ECS	Environmental Control System	EI	Engine Instrument
ECU	(1) Environmental Control Unit or (2) Electronic Control Unit	EICAS	Engine Indicating and Crew Alerting System
ED	Electronic Display	EIS	Engine Indicating System
EDP	Engine Driven Pump	ELEC	Electrical
EEC	Engine Electronic Controller	ELT	Emergency Locator Transmitter
EFIS	Electronic Flight Instrument System	EMER	Emergency

E (Cont)

ENG	Engine	EVMS	Engine Vibration Monitor System
EPC	External Power Contactor	EVMU	Engine Vibration Monitor Unit
ERP	Eye Reference Position (datum)	EXT	External or Extend
ESS	Essential	EXT PWR	External Power

F

F/D, or FD	Flight Director	FIDEX	Fire Detection and Extinguishing System
FAA	Federal Aviation Administration (USA)	FIREX	Fire Extinguisher
FAIL	Failure	FMC	Flight Management Computer
FADEC	Full Authority Digital Engine Control	FMS	Flight Management System
FCC	Flight Control Computer	FOD	Foreign Object Damage
FCOM	Flight Crew Operating Manual	FPM	Feet Per Minute
FCU	Flight Control Unit	FPU	Flap Power Unit
FDR	Flight Data Recorder	FREQ	Frequency
FECU	Flap Electronic Control Unit	FT	Feet, Foot
FF, F/F	Fuel Flow	FUSE	Fuselage
FGC	Flight Guidance Computer	FW	Fire Wall
FGP	Flight Guidance Panel	FWD	Forward
FIRE BTL	Fire Bottle		
FL	Flight Level		
FLC	Flight Level Change		

G

		GND	Ground
G/S or GS	Ground Speed/Glideslope	GP	Guidance Panel
GA	Go-Around	GPM	Gallons Per Minute
GAL	Gallon	GPS	Global Positioning System
GALY	Galley	GR, or GEAR	Landing Gear
GCU	Generator Control Unit	GRAV	Gravity
GCS	Ground Clutter Suppression	GTC	Generator Transfer Contactor
GEN	Generator	GUIDE	Guidance
GLC	Generator Line Contactor	GW	Gross Weight
GLD	Ground Lift Dumping		
GMT	Greenwich Mean Time		

H

HDG	Heading	HP	High Pressure
HDG HOLD	Heading Hold	hPA	Hecto Pascal

H (Cont)

HDG SEL	Heading Select	HPSOV	High Pressure Shut Off Valve
HDPH	Headphone	HSI	Horizontal Situation Indicator
HEAT,	Heater	HSTA	Horizontal Stabilizer Trim Actuator
HF	High Frequency (3 - 30 MHz)	HSTCU	Horizontal Stabilizer Trim Control Unit
Hg	Inches of Mercury	HTR	Heater
HI	High	HYD	Hydraulic
HLDR	Holder	Hz	Hertz
HOR, HORIZ	Horizontal		

I

I/B, or INBD	Inboard	INFLT	In Flight
I/O	Input/Output	IGV	Inlet Guide Vanes
IAPS	Integrated Avionics Processor System	INHB, or INHIB	Inhibit
IAS	Indicated Airspeed (Knots)	INSTR(S	Instrument(s)
ICAO	International Civil Aviation Organization	INT	Internal, Integral, Intersection
ICC	Integrated Card Cage	ISA	International Standard Atmosphere
ID, or IDENT	Identification	ISO	International Standard Organization
IFR	Instrument Flight Rules	ISOL	Isolation, Isolated
IGN	Ignition	ITT	Interstage Turbine Temperature (°C)
ILS	Instrument Landing System	IOC	Input/Output Concentrator
IMP	Imperial	IOP	Input/Output Processor
IN or in	Inch(es)	IRU	Inertial Reference Unit
IND	Indication, Indicator		

J

JAA	Joint Aviation Authorities

K

K, KT, KTS	Knots	kg	Kilogram
KIAS	Knots Indicated Airspeed	kHz	Kilo Hertz
KTAS	Knots True Airspeed	kPa	Kilo Pascal
		kW	Kilo Watts

L

LAT/LONG	Latitude/Longitude	LNDG ALT	Landing Altitude
L/G or LG	Landing Gear	LOC	Localizer
L	Left	LOM	Compass Locator at Outer Marker
LAV	Lavatory	LP	Low Pressure

L (Cont)

lb	pounds	LPM	Liter Per Minute
LCV	Load Control Valve	LRC	Long Range Cruise
LDG	Landing	LRN	Long Range Navigation
LDG GR	Landing Gear	LRU	Line Replaceable Unit
LDU	Lamp Driver Unit	LSB	Lower Side Band
LE	Leading Edge	LSK	Line Select Key
LEV	Level	LSS	Lighting Sensor System
LFE	Landing Field Elevation	LWD	Left Wing Down
LGW	Landing Gross Weight	LX	Lighting
LH	Left Hand		
LIM	Limit		
LNAV	Lateral Navigation		

M

M	Mach Number	Mi	Miles
m	Meter	MIC	Microphone
mB	Millibars	MILS	0.001 of an inch
MAA	Maximum Authorized IFR Altitude	MIN	Minimum
MAC	Mean Aerodynamic Chord	MISCMP	Miscompare
MAG	Magnetic	MKR	Marker
MAINT	Maintenance	MLG	Main Landing Gear
MALF	Malfunction	MLS	Microwave Landing System
MAN	Manual	MLW	Maximum Landing Weight
MAP	Ground Map (WXR)	MM	Middle Marker
		MMEL	Master Minimum Equipment List
MCA	Minimum Crossing Altitude	MMO	Maximum operating Speed in Mach Numbers
MCL	Maximum Climb Thrust	MOCA	Minimum Obstruction Clearance Altitude Module
MCT	Maximum Continuous Thrust	MON	Monitor
MDA	Minimum Descent Altitude	MEA	Minimum Enroute IFR Altitude
MDC	Maintenance Diagnostic Computer		
MEL	Minimum Equipment List	MRS	Manual Release System
MF	Multi Function	MSG	Message
MFD	Multi Function Display	MSL	Mean Sea Level
MFS	Multi Function Spoilers	MSW	Master Wheel Disconnect
MHz	Mega Hertz (freq range)	MTG	Miles To Go
M_I	Mach indicated	MTOW	Maximum Take Off Weight
MRA	Minimum Reception Altitude	MZFW	Maximum Zero Fuel Weight

MISC

%	Percent	°C	Degrees Centigrade
&	And	°F	Degrees Fahrenheit

N

N/A	Not Applicable	NEUT	Neutral
N/W	Nose Wheel	NL	Nose Left
N_1	Fan Speed	NLG	Nose Landing Gear
N_2	High Pressure Rotor RPM	NM	Nautical Mile
NAV	Navigation	No.	Number
NAVAID	Navigational Aid	NOPT	No Procedure Turn Required
NAVSRC	Navigation Source	NORM	Normal
ND	Nose Down	N/W	Nosewheel
NDB (ADF)	Non directional Beacon (Automatic Direction Finder)	NR NU	Nose Right Nose Up
NEG	Negative	NWS	Nose Wheel Steering

O

O/S	Overspeed	OUTBD	Outboard
OAT	Outside Air Temperature	OVBD	Overboard
OB, or OUTBD	Outboard	OVHT	Overheat
OBS	Observer	OVLD	Overload
OEI	One Engine Inoperative	OVTEMP	Over Temperature
OEW	Operating Empty Weight	OXY, O2	Oxygen
OM	Outer Marker	OZC	Ozone Converter
OT	Other Traffic		

P

P/S	Pitot/Static	PROC	Procedure
P, or PRESS	Pressure, Pressurization	PROT	Protection
PA	Passenger Announcement	PROX	Proximity
PACK	Air-Conditioning Unit	PSE	Passenger Service Unit
PAX, PASS	Passenger	PSEU	Proximity Sensor Electronics Unit
PBE	Protective Breathing Equipment	PSI	Pounds Per Square Inch
PCU PFD	Power Control Unit Primary Flight Display	PSID	Pounds Per Square Inch Differential
PIT	Pitch	PSIG	Pounds Per Square Inch Gauge
PLT	Pilot	PSS	Proximity Sensor System
POS	Position	PTT	Push To Talk
PPH	Pounds Per Hour	PV	Priority Valve
PRI, or PRIM	Primary		
PRI PRV	Primary Pressure Regulating Valve		

Q

QFE	Local Station Pressure	QTY	Quantity
QNH	Altimeter Setting		

R

R/D	Refuel/Defuel	RET	Retract
R/T, RT	Receiver-Transmitter	RIU	Radio Interface Unit
R	Right	RH	Right Hand
RA	Resolution Advisory (TCAS)	RMU	Radio Management Unit
RA, RADALT	Radio Altitude	ROL	Roll
RCDR	Recorder	rpm	Revolutions per Minute
		RSB	Radio System Bus
RCVR	Receiver	RTE	Route
RDC	Remote Data Concentrator	RTO	Rejected Take Off
RDR	Radar	RUD	Rudder
REC	Receiver, Recorder	RVR	Runway Visual Range
RECIRC	Recirculation	RVSM	Reduced Vertical Separation Minimum
RECOG	Recognition	REV	Reverser
REF(s)	Reference(s)	RWD	Right Wing Down
REFL	Refuel	RWY	Runway

S

S, STAT	Status	SPKR	Speaker
SAT	Static Air Temperature	SPLR(S)	Spoiler(s)
SBY, STBY	Standby	SQ	Squelch
SCAV	Scavenge	SSB	Single Side Band
SCR	Selector (Nav source)	STA	Station
SCU	Steering Control Unit	STAB	Stabilizer
SCV	Surge Control Valve	STBY	Standby
SEC	Secondary	STD	Standard
SEL	Select, Selector		
SELCAL	Selective Calling	STEER	Steering
SENS	Sensitivity, Sensor	SUPPL	Supply
SERV, SVCE	Service	SVO	Servo
SID	Standard Instrument Departure	SW(s)	Switches
SMKG	Smoking	SYN	Synchronize
SOV	Shut-Off Valve	SYNC	Synchronization, Synchronous
SP, SPD	Speed	SYS	System

T

T/C	Top of climb	TD	Traffic Display
TOD	Top of descent	TE	Trailing Edge
TO/GA	Takeoff / Go Around	TEMP	Temperature
T/R	Thrust Reverser	TGT	Target
T_2	Temperature, inlet duct sensor	TLA	Thrust Lever Angle
TA	Traffic Advisory (TCAS)	TOL	Tolerance
TAS	True Air Speed	TO	Takeoff
TAT	Total Air Temperature	TRB, TURB	Turbulence
TAWS	Terrain Awareness Warning System	TRK	Track
TCAS	Traffic Alert and Collision Avoidance System	TRM	Trim
TCS	Touch Control Steering	TST	Test

U

UNLKD	Unlocked	USG	United States Gallons
US	United States	UNSCHD	Unscheduled
USB	Upper Side Band	UTIL	Utility

V

V/L	VOR/Localizer	V_{LOF}	Lift-off Speed
V/S	Vertical Speed	V_{MC}	Minimum Control Speed with the Critical Engine Inoperative
V	Volt		
V_A	Design Maneuvering Speed	V_{MU}	Minimum Unstick Speed
V_B	Design Speed for Maximum Gust Intensity Design	V_R	Rotation Speed
V_C	Cruising Speed	V_S	Stalling Speed or the Minimum Steady Flight Speed at which the Airplane is Controllable
V_D	Design Diving Speed		
V_{DF}/M_{DF}	Demonstrated Flight Diving Speed	V_{SO}	Stalling Speed or the Minimum Steady Flight Speed in the Landing Configuration
V_{EF}	Engine Failure Speed		
V_{FC}/M_{FC}	Maximum Speed for Stability Characteristics	VNAV	Vertical Navigation System
V_{FE}	Maximum Flaps Extended Speed	Vol	Volume
V_{LE}	Maximum Landing Gear Extended Speed		
V_{LO}	Maximum Landing Gear Operating Speed	V_{RA}	Rough Air Penetration speed
V_{MCA}	Minimum Control Speed Air	V_{REF}	Reference Velocity
V_{MCG}	Minimum Control Speed Ground	V_{S1}	Stalling Speed or the Minimum Steady Flight Speed Obtained in a Specific Configuration

V(Cont)

V_{MCL}	Minimum Control Speed Landing	V_1	Take-off Decision Speed (formerly Denoted as Critical Engine Failure Speed)
V_{MO}/M_{MO}	Maximum Operating Limit Speed	V_2	Take-off Safety Speed
VERT	Vertical	VOR	VHF Omnidirectional Range Station
VFR	Visual Flight Rules		
VG	Vertical Gyro	VORTAC	VOR and TACAN Co-located
V_{GA}	Minimum Go Around Speed		
VHF	Very High Frequency (30-300 MHz)	VS	Vertical Speed Mode
		VSI	Vertical Speed Indicator

W

W/C	Wind Component	WOW	Weight-On-Wheels
W/S	Wind Shear	WPT(s)	Waypoints
W/W	Wheel Well	WSHLD	Windshield
W or WARN	Warning	Wt or WGT	Weight
WAI	Wing Anti-Ice	WTC	Windshield Temperature Control
WF	Runway Length Limited Weight	Wx	Weather
Wf	Fuel Flow In Pounds Per Hour	WXR	Weather Radar

X

XFR or XFER	Transfer	XPNDR	Transponder
XBLEED	Cross Bleed	XTK	Cross Track
XFLOW	Cross Flow	XWC	Cross Wind Component
XMIT	Transmit		

Y

YD or Y/D	Yaw Damper

Z

ZFW	Zero Fuel Weight

CONVERSION FACTORS

CONVERSION TABLE (Standard to Metric [multiply])
(Metric to Standard [divide])

standard	factor	metric
in	2.54	cm
in	25.4	mm
in^2	6.4516	cm^2
oz	28.3495	g
fl oz	29.574	ml
U.S. gal	3.7854	liters
U.S. gal/min	3.7854	liters/min
psi	6.8948	kPa
ft	0.3048	m
ft	30.48	cm
lb	0.4536	kg
lb/min	0.4536	kg/min
lbf	4.4482	N
lbf in	0.1130	Nm
lbf ft	1.3558	Nm
in Hg	3.3864	kPa

TEMPERATURE CONVERSION TABLE

- To convert from Celsius to Fahrenheit, find, in bold face columns, the number representing the Celsius temperature to be converted. The equivalent Fahrenheit temperature is read in the adjacent column headed °F.
- To convert from Fahrenheit to Celsius, find, in bold face columns, the number representing the Fahrenheit temperature to be converted. The equivalent Celsius temperature is read in the adjacent column headed °C.

°F	◄►	°C	°F	◄►	°C	°F	◄►	°C	°F	◄►	°C	°F	◄►	°C
-148.0	**-100**	-73.3	-58.0	**-50**	-45.6	32.0	**0**	-17.8	122.0	**50**	10.0	212.0	**100**	37.8
-146.2	**-99**	-72.8	-56.2	**-49**	-45.0	33.8	**1**	-17.2	123.8	**51**	10.6	213.8	**101**	38.3
-144.4	**-98**	-72.2	-54.4	**-48**	-44.4	35.6	**2**	-16.7	125.6	**52**	11.1	215.6	**102**	38.9
-142.6	**-97**	-71.7	-52.6	**-47**	-43.9	37.4	**3**	-16.1	127.4	**53**	11.7	217.4	**103**	39.4
-140.8	**-96**	-71.1	-50.8	**-46**	-43.3	39.2	**4**	-15.6	129.2	**54**	12.2	219.2	**104**	40.0
-139.0	**-95**	-70.6	-49.0	**-45**	-42.8	41.0	**5**	-15.0	131.0	**55**	12.8	221.0	**105**	40.6
-137.2	**-94**	-70.0	-47.2	**-44**	-42.2	42.8	**6**	-14.4	132.8	**56**	13.3	222.8	**106**	41.1
-135.4	**-93**	-69.4	-45.4	**-43**	-41.7	44.6	**7**	-13.9	134.6	**57**	13.9	224.6	**107**	41.7
-133.6	**-92**	-68.9	-43.6	**-42**	-41.1	46.4	**8**	-13.3	136.4	**58**	14.4	226.4	**108**	42.2
-131.8	**-91**	-68.3	-41.8	**-41**	-40.6	48.2	**9**	-12.8	138.2	**59**	15.0	228.2	**109**	42.8
-130.0	**-90**	-67.8	-40.0	**-40**	-40.0	50.0	**10**	-12.2	140.0	**60**	15.6	230.0	**110**	43.3
-128.2	**-89**	-67.2	-38.2	**-39**	-39.4	51.8	**11**	-11.7	141.8	**61**	16.1	231.8	**111**	43.9
-126.4	**-88**	-66.7	-36.4	**-38**	-38.9	53.6	**12**	-11.1	143.6	**62**	16.7	233.6	**112**	44.4
-124.6	**-87**	-66.1	-34.6	**-37**	-38.3	55.4	**13**	-10.6	145.4	**63**	17.2	235.4	**113**	45.0
-122.8	**-86**	-65.6	-32.8	**-36**	-37.8	57.2	**14**	-10.0	147.2	**64**	17.8	237.2	**114**	45.6
-121.0	**-85**	-65.0	-31.0	**-35**	-37.2	59.0	**15**	-9.4	149.0	**65**	18.3	239.0	**115**	46.1
-119.2	**-84**	-64.4	-29.2	**-34**	-36.7	60.8	**16**	-8.9	150.8	**66**	18.9	240.8	**116**	46.7
-117.4	**-83**	-63.9	-27.4	**-33**	-36.1	62.6	**17**	-8.3	152.6	**67**	19.4	242.6	**117**	47.2
-115.6	**-82**	-63.3	-25.6	**-32**	-35.6	64.4	**18**	-7.8	154.4	**68**	20.0	244.4	**118**	47.8
-113.8	**-81**	-62.8	-23.8	**-31**	-35.0	66.2	**19**	-7.2	156.2	**69**	20.6	246.2	**119**	48.3
-112.0	**-80**	-62.2	-22.0	**-30**	-34.4	68.0	**20**	-6.7	158.0	**70**	21.1	248.0	**120**	48.9
-110.2	**-79**	-61.7	-20.2	**-29**	-33.9	69.8	**21**	-6.1	159.8	**71**	21.7	249.8	**121**	49.4
-108.4	**-78**	-61.1	-18.4	**-28**	-33.3	71.6	**22**	-5.6	161.6	**72**	22.2	251.6	**122**	50.0
-106.6	**-77**	-60.6	-16.6	**-27**	-32.8	73.4	**23**	-5.0	163.4	**73**	22.8	253.4	**123**	50.6
-104.8	**-76**	-60.0	-14.8	**-26**	-32.2	75.2	**24**	-4.4	165.2	**74**	23.3	255.2	**124**	51.1
-103.0	**-75**	-59.4	-13.0	**-25**	-31.7	77.0	**25**	-3.9	167.0	**75**	23.9	257.0	**125**	51.7
-101.2	**-74**	-58.9	-11.2	**-24**	-31.1	78.8	**26**	-3.3	168.8	**76**	24.4	258.8	**126**	52.2
-99.4	**-73**	-58.3	-9.4	**-23**	-30.6	80.6	**27**	-2.8	170.6	**77**	25.0	260.6	**127**	52.8
-97.6	**-72**	-57.8	-7.6	**-22**	-30.0	82.4	**28**	-2.2	172.4	**78**	25.6	262.4	**128**	53.3
-95.8	**-71**	-57.2	-5.8	**-21**	-29.4	84.2	**29**	-1.7	174.2	**79**	26.1	264.2	**129**	53.9
-94.0	**-70**	-56.7	-4.0	**-20**	-28.9	86.0	**30**	-1.1	176.0	**80**	26.7	266.0	**130**	54.4
-92.2	**-69**	-56.1	-2.2	**-19**	-28.3	87.8	**31**	-0.6	177.8	**81**	27.2	267.8	**131**	55.0
-90.4	**-68**	-55.6	-0.4	**-18**	-27.8	89.6	**32**	0.0	179.6	**82**	27.8	269.6	**132**	55.6
-88.6	**-67**	-55.0	1.4	**-17**	-27.2	91.4	**33**	0.6	181.4	**83**	28.3	271.4	**133**	56.1
-86.8	**-66**	-54.4	3.2	**-16**	-26.7	93.2	**34**	1.1	183.2	**84**	28.9	273.2	**134**	56.7
-85.0	**-65**	-53.9	5.0	**-15**	-26.1	95.0	**35**	1.7	185.0	**85**	29.4	275.0	**135**	57.2
-83.2	**-64**	-53.3	6.8	**-14**	-25.6	96.8	**36**	2.2	186.8	**86**	30.0	276.8	**136**	57.8
-81.4	**-63**	-52.8	8.6	**-13**	-25.0	98.6	**37**	2.8	188.6	**87**	30.6	278.6	**137**	58.3
-79.6	**-62**	-52.2	10.4	**-12**	-24.4	100.4	**38**	3.3	190.4	**88**	31.1	280.4	**138**	58.9
-77.8	**-61**	-51.7	12.2	**-11**	-23.9	102.2	**39**	3.9	192.2	**89**	31.7	282.2	**139**	59.4
-76.0	**-60**	-51.1	14.0	**-10**	-23.3	104.0	**40**	4.4	194.0	**90**	32.2	284.0	**140**	60.0
-74.2	**-59**	-50.6	15.8	**-9**	-22.8	105.8	**41**	5.0	195.8	**91**	32.8	285.8	**141**	60.6
-72.4	**-58**	-50.0	17.6	**-8**	-22.2	107.6	**42**	5.6	197.6	**92**	33.3	287.6	**142**	61.1
-70.6	**-57**	-49.4	19.4	**-7**	-21.7	109.4	**43**	6.1	199.4	**93**	33.9	289.4	**143**	61.7
-68.8	**-56**	-48.9	21.2	**-6**	-21.1	111.2	**44**	6.7	201.2	**94**	34.4	291.2	**144**	62.2
-67.0	**-55**	-48.3	23.0	**-5**	-20.6	113.0	**45**	7.2	203.0	**95**	35.0	293.0	**145**	62.8
-65.2	**-54**	-47.8	24.8	**-4**	-20.0	114.8	**46**	7.8	204.8	**96**	35.6	294.8	**146**	63.3
-63.4	**-53**	-47.2	26.6	**-3**	-19.4	116.6	**47**	8.3	206.6	**97**	36.1	296.6	**147**	63.9
-61.6	**-52**	-46.7	28.4	**-2**	-18.9	118.4	**48**	8.9	208.4	**98**	36.7	298.4	**148**	64.4
-59.8	**-51**	-46.1	30.2	**-1**	-18.3	120.2	**49**	9.4	210.2	**99**	37.2	300.2	**149**	65.0

INDEX

A

Abbreviations and Acronyms....00-02-03
Addresses....00-02-02
Aerodynamic Stall....18-01-16
Aft Equipment Bay Door Annunciation....01-05-11
AHRS Computers....11-01-16
Aileron Trim....10-02-02
Aileron Trim Schematic....10-02-04
Ailerons and Multifunction Spoilers....10-01-02
Air Cond/Bleed Control Panel....05-01-10
Air Cond/Bleed Control Panel....18-01-24
Air Conditioning Controls....02-03-03
Air Conditioning Pack....02-03-02
Air Conditioning System....02-03-01
Air Data....11-01-28
Air Data and Sensors Anti-Ice....14-01-07
Air Data Computers....11-01-12
Air Data Flags....11-01-10
Air Data Reversion Switch....03-02-10
Air Data Reversion Switch....11-01-12
Air Data System....11-01-11
Air Distribution and Exhaust System....02-03-05
Air Intake and Exhaust....05-01-05
Air Turbine Starter (ATS)....18-01-15
Aircraft Dimension Schematic....01-02-02
Aircraft Lighting....16-01-01
Aircraft Symbol....11-01-04
Airflow Paths....18-01-02
Airplane Jacking....01-03-01
Airport IDENTS Overlay....11-02-30
Airspeed Display....11-01-11
Airstair Lighting....16-01-10
Aligning Flag....11-01-29
Altimeter Barometer Knob....11-01-12
Altitude....11-01-08
Altitude Display....11-01-08
Angle-of-Attack Vanes (AOA)....14-01-17
Annunciations....17-01-30
Antenna Location Schematic....01-02-05
Anti-Ice Control Panel....14-01-09
Anti-Ice Synoptic Page....03-04-02
Anti-Ice Synoptic Page....14-01-10
Anti-Skid....15-01-15
APU Access Panel Locations....05-01-02
APU Bleed Valve....02-02-04
APU Bleed Valve Operation....02-02-05
APU Fire Switch....09-01-09
APU Fuel Feed....12-01-05
APU Fuel Shutoff Valve (SOV)....12-01-07
APU Fuel Supply....05-01-06
APU/Engine Bleed Switching....02-02-05
APU/Engine Bleed Switching Sequence....02-02-05
APU Schematic....05-01-03

(Continued)

INDEX

APU Shutdown Mode 05-01-06
Area Microphone 06-01-15
ATC Antennas 17-01-07
ATT/HDG Reversion Switch 03-02-10
ATT/HDG Reversion Switch 11-01-16
Attitude and Heading Flags 11-01-18
Attitude and Heading Reference System (AHRS) 11-01-15
Attitude Display 11-01-04
Attitude/Heading 11-01-28
Audio Control Panels (ACPs) 06-01-01
Aural Warning Disable 03-02-04
Auto APR Function 18-01-07
Auto Flight Control System Display 11-01-21
Automatic Direction Finder (ADF) 17-01-06
Automatic Pressurization Modes 02-04-02
Autopilot 04-01-21
Autopilot and Yaw Damper Disconnect Lever 04-01-23
Autopilot Disengagement 04-01-23
Autopilot Engagement 04-01-21
Autopilot Indication 11-01-21
Autopilot Servo Motors 04-01-21
Autopilot Takeoff Configuration Warning 04-01-23
Auxiliary Accumulator Servicing 13-01-10
Auxiliary DC Motor-Driven Pump 13-01-07
Auxiliary Hydraulic System 13-01-07
Auxiliary Hydraulic System Accumulators and Reservoir 13-01-07
Auxiliary Hydraulic System Schematic 13-01-11
Auxiliary Power Unit Fire Protection 09-01-08
Auxiliary System Pressure Filter 13-01-07
Auxiliary System Switching Valve 13-01-07
Avionics and Cockpit Display Ventilation 02-03-09

B

BARO MIN 11-01-10
Batteries 07-01-05
Bearing Pointers 11-01-20
Bleed Air and Anti-Ice Ducts 02-02-06
Bleed Air Availability 05-01-08
Bleed Air Distribution 02-02-02
Bleed Air Extraction 18-01-08
Bleed Air Leak Detection System 02-02-06
Bleed Air Limitations 05-01-08
Bleed Air Management 02-02-05
Bleed Air Manifold 02-02-03
Bleed Air System 02-02-01
Bleed Leak Detection System 14-01-03
Bleed Valve 05-01-08
Bleed Valve Modulation/Bleed Air Loads 05-01-08
Brake Control System 15-01-13

INDEX

C

Cabin and Cockpit Air Distribution System 02-03-10
Cabin Communication System (Optional) 06-01-16
Cabin Equipment 01-05-06
Cargo and Service Compartments Lighting 16-01-11
Cargo Bay Door 01-05-08
Cargo Bay Door Annunciations 01-05-08
Cargo Bay Fire Protection 09-01-11
CB 1 Pilot Circuit Breaker Panel (Typical) 07-01-07
CB 1 Pilot Circuit Breaker Panel (Typical) 01-04-08
CB 2 Copilot Circuit Breaker Panel (Typical) 07-01-08
CB 2 Copilot Circuit Breaker Panel (Typical) 01-04-09
CB 3 Left Side Equipment Rack Circuit Breaker Panel (Typical) 07-01-09
CB 3 Left Side Equipment Rack Circuit Breaker Panel (Typical) 01-04-10
CB 4 Right Side Equipment Rack Circuit Breaker Panel (Typical) 07-01-10
CB 4 Right Side Equipment Rack Circuit Breaker Panel (Typical) 01-04-11
CB 5 Left DC Power Center Circuit Breaker Panel (Typical) 07-01-11
CB 5 Left DC Power Center Circuit Breaker Panel (Typical) 01-04-12
CB 6 Right DC Power Center Circuit Breaker Panel (Typical) 07-01-11
CB 6 Right DC Power Center Circuit Breaker Panel (Typical) 01-04-12
CDU HF Radio Control 06-01-10
Center Pedestal 01-04-06
Chart Holder and Map/Reading Lights 16-01-06
Chart List 11-02-08
Chart Main Index 11-02-04
Chart NOTAMS Menu Display 11-02-10
Chart Subscription Page 11-02-32
Chart Type Menu 11-02-07
Check Valves 02-02-03
Chronograph (CHR) 11-01-30
Circuit Breaker Panels 07-01-06
Circuit Breaker Panels 01-04-08
Climb Mode with Selected Landing Field Elevation Greater Than 7850 ft 02-04-06
Climb Thrust (CLB) 18-01-08
Clock/Chronometer 11-01-30
Cockpit Floor Heaters 07-01-06
Cockpit Layout 01-04-03
Cockpit Lighting 16-01-01
Cockpit Voice Recorder 03-02-12
Cockpit Voice Recorder (CVR) 06-01-14
Collector Tank 12-01-06
Compartment 05-01-01
Compass Control and Slew Switches 11-01-16
Compass Correction Card 11-01-31
Configuration Trim 10-02-03
Control Display Unit 06-01-08
Control Switches and Function 14-01-09
Control Wheel 01-04-13
Control Wheel TX and INPH Switches 06-01-02
Conversion Factors 00-02-12
Course Display 11-01-19
Course Pointer 11-01-19
Crew Oxygen Mask 08-01-07

(Continued)

INDEX

Crew Seat Assembly 01-04-01
Cross-Pointer Command Bars 04-01-03
Cruise Mode with Selected Landing Field Elevation Greater Than 7850 ft 02-04-06
Cruise Range (CRZ) 18-01-08
CVR Control Panel 06-01-14

D

Danger Areas 01-02-08
Database Functions 11-02-32
Data Concentrator Units 03-02-02
Data Link (Optional) 06-01-12
DC Electrical System 07-01-12
DC Motor-Driven Pump 13-01-03
DC Primary Architecture 07-01-13
DC System Distribution Busses 07-01-12
Dead Reckoning (DR) 17-01-34
Declutter 11-01-06
Detection Loops 09-01-04
Detection Loops 09-01-11
Direct Current System 07-01-12
Directional Control Unit 18-01-21
Display Control Panel 11-01-25
Display Control Panel (DCP) 11-01-35
Display Control Panel (DCP) 17-01-14
Display Control Panel Com Radio Control 06-01-07
Display Control Panel HF Tuning Control 06-01-10
Display Control Panel Warning Flag 11-01-26
Display Cooling 03-02-02
Distance Display 11-01-20
Distance Measuring Equipment (DME) 17-01-06
Door Latching Mechanism 01-05-04
Door Warning System 01-05-12
Dual-Sensing Loops 02-02-06

E

Ecology Bottle 13-01-04
ECS Synoptic Page 02-04-09
ECS Synoptic Page 05-01-13
ECS Synoptic Page 03-04-03
EICAS Advisory Messages 03-03-04
EICAS Caution Messages 03-03-02
EICAS Display 18-01-24
EICAS Status Messages 03-03-05
EICAS Trim Status Display 10-02-16
EICAS Voice Messages 03-03-05
EICAS Warning Messages 03-03-01
Electric Fuel Pumps 12-01-05
Electrical Control Panel 07-01-16
Electrical Pneumatic Actuating Valve (EPAV) 08-01-09
Electrical Power 18-01-05
Electrical Control Panel 05-01-11
Electrical Summary Page 07-01-15
Electrical Synoptic Page 05-01-12

(Continued)

INDEX

Electrical Synoptic Page....03-04-04
Electrical Synoptic Page....07-01-17
Electrical System....07-01-03
Electronic Charts (E-Charts)....11-02-02
Elevator Control Schematic....10-01-09
Elevators....10-01-07
Emergency Equipment....08-01-11
Emergency Exit....01-05-05
Emergency Exit Annunciations....01-05-06
Emergency Lighting....16-01-07
Emergency Locator Transmitter....06-01-16
Engine and APU Generators....07-01-03
Engine Anti-Ice....14-01-06
Engine Bleed Air Pressure Regulation....02-02-05
Engine Bleed Air System....18-01-13
Engine Condition and Fault Reporting (ECFR)....18-01-06
Engine Construction....18-01-02
Engine Control Panel....18-01-23
Engine Control System....18-01-05
Engine Fire Detection....09-01-04
Engine Fire Protection....09-01-06
Engine Fuel Feed....12-01-05
Engine Fuel Shutoff Valve (SOV)....12-01-06
Engine Fuel System....18-01-04
Engine Idle....18-01-05
Engine Indicating and Crew Alerting System (EICAS)....03-02-01
Engine Lubrication Schematic....18-01-12
Engine Motoring....18-01-06
Engine Nacelle Ducting....14-01-06
Engine Oil Level and Replenishment System....18-01-11
Engine Oil Pressure Indications....18-01-10
Engine Oil System....18-01-10
Engine Oil Temperature....18-01-11
Engine Spinner....14-01-06
Engine Start Controls....18-01-24
Engine Start Sequence....02-02-05
Engine Starting....18-01-16
Engine Starting System....18-01-14
Engine Synchronization....18-01-09
Engine-Driven Pumps....13-01-03
Enhanced Map Data....11-02-29
Entrance and Cabin Lighting....16-01-09
Exhaust....05-01-05
Exhaust Gas Temperature....05-01-05
External Aircraft Lighting....16-01-12
External Ground Air Connector....02-02-03
External Lights....16-01-08
External Power....07-01-03
External Power Control Panel....05-01-09
External Power Control Panel....07-01-14
Eye Locator — Seat Adjustment....01-04-02

INDEX

F

FADEC Unit 18-01-05
Fire Detection and Extinguishing Control Unit 09-01-04
Fire Detection and Extinguishing Control Unit 09-01-11
Fire Ext 1 (2) Switches 09-01-06
Fire Extinguisher Bottle 09-01-09
Fire Extinguisher Bottles 09-01-04
Fire Protection System Overview Schematic 09-01-03
FIREX Bottle Pressures 09-01-07
FIREX Control Unit Schematic 09-01-05
Flameout Protection 18-01-17
Flap Alerting 10-02-06
Flap Control Lever 10-02-07
Flap Control Lever 10-02-16
Flap Position Indication 10-02-07
Flapper Check Valves 12-01-05
Flaps 10-02-06
Flashlights 16-01-06
Flight Alignment 11-01-17
Flight Compartment Lighting 16-01-01
Flight Compartment Printer (Optional) 16-01-16
Flight Compartment Speakers 06-01-04
Flight Control Synoptic Page 10-02-17
Flight Controls Synoptic Page 03-04-05
Flight Crew Oxygen Mask and Storage Cup 08-01-06
Flight Crew Oxygen Mask Cold Weather Storage 08-01-06
Flight Deck Emergency Equipment 08-01-11
Flight Director Command Bars 04-01-02
Flight Director Command Bars 11-01-21
Flight Director Lateral Modes 04-01-07
Flight Director Synchronization 04-01-06
Flight Director Vertical Modes 04-01-13
Flight Director Warning Flag 11-01-21
Flight Directors (FD) 04-01-02
Flight Guidance Mode 11-01-21
Flight Guidance Mode Display Area 04-01-03
Flight Guidance Panel (FGP) 04-01-04
Flight Management System 17-01-33
Flight Spoiler Schematic 10-02-11
Flight Spoilers Lever 10-02-09
Flight Time (FLT/RST) 11-01-30
FMS Calculated Vspeeds (Optional) 17-01-34
Forward 00-02-01
Fuel Computer 12-01-05
Fuel Computer 12-01-07
Fuel Computer 12-01-10
Fuel Control Panel 12-01-10
Fuel Control Unit and Fuel Shutoff Solenoid 05-01-06
Fuel Display 12-01-11
Fuel Distribution 05-01-06
Fuel Distribution 12-01-05
Fuel Filter 12-01-06
Fuel Heater/Oil Cooler 12-01-06

(Continued)

INDEX

Fuel Indication and Control 12-01-09
Fuel Level Sensors 12-01-09
Fuel Metering Unit 18-01-04
Fuel Pump 18-01-04
Fuel Quantity Gaging Computer 12-01-09
Fuel Quantity Gauging 12-01-10
Fuel Quantity Indications 12-01-11
Fuel Quantity Probes 12-01-09
Fuel Synoptic Page 05-01-14
Fuel Synoptic Page 03-04-06
Fuel Synoptic Page 12-01-12
Fuel System Controls 12-01-06
Fuel System Operation 18-01-04
Fuel Tank Capacities 12-01-03
Fuel Tank System 12-01-02
Fuel Temperature Probe 12-01-09
Fuel Temperature Readouts 12-01-11
Fuel/Oil Heat Exchanger and Fuel Filter 18-01-04

G

Gas Generator 05-01-04
Gear Extension 15-01-09
Gear Retraction 15-01-09
Gearbox Assembly 05-01-04
General MFD Tuning 06-01-06
Glideslope Flag 11-01-05
Global Positioning System (GPS) 17-01-34
GPS Control 17-01-34
GPS/MAN Mode 11-01-30
Graphical Weather 11-02-12
Graphical Weather (GWX-3000) 11-02-21
Graphical Weather (GWX-5000) 11-02-12
Graphical Weather Menu 11-02-22
Gravity Refueling 12-01-09
Ground Alignment 11-01-17
Ground Spoilers 10-02-12
Grounding Receptacles 12-01-08
GWX Image List 11-02-13
GWX Overlays Menu 11-02-27

H

1/2 Bank Indicator 11-01-21
Hand Microphones 06-01-04
Heading Display 11-01-18
Heading Indicators 11-01-18
Headset Jack Plugs 06-01-03
HF Antenna 06-01-09
HF Coupler 06-01-09
HF Radio Communication (Optional) 06-01-09
High Pressure Valves 02-02-03
High-Level Sensors 12-01-08
High-Power Amplifier 06-01-12
Honeywell AS907 Engine Module Breakdown 18-01-02
Horizon Line 11-01-04

(Continued)

INDEX

Horizontal Situation Indicator (HSI) 11-01-20
Horizontal Stabilizer Trim 10-02-03
Horizontal Stabilizer Trim Schematic 10-02-05
Hydraulic Control Panel 13-01-12
Hydraulic Motor Driven Generator (HMDG) (Optional) 07-01-06
Hydraulic Reservoir 13-01-03
Hydraulic Reservoir Quantity Percentages 13-01-04
Hydraulic Servicing 13-01-08
Hydraulic Servicing Panel 13-01-09
Hydraulic Shutoff Valve 13-01-03
Hydraulic Synoptic Page 03-04-07
Hydraulic Synoptic Page 13-01-13

I

Ice Detection System 14-01-02
Icing Image 11-02-20
Ignition System 05-01-07
Ignition System 18-01-16
Index 00-03-01
Input/Output Concentrator Unit 03-02-11
Instrument Panel 01-04-07
Integrated Air System Controller 02-02-05
Integrated Air System Controller 02-03-01
Integrated Air System Controller (IASC) 14-01-03
Integrated Air System Controllers (IASC) 02-04-01
Integrated Avionics Processor System (IAPS) 03-02-11
Integrated Avionics Processor System Card Cage 03-02-11
Integrated Avionics Processor System Environmental Controller (IEC) 03-02-11
Integrated Avionics Processor System Power Supply 03-02-11
Integrated Flight Information System (IFIS) 11-02-01
Integrated Navigation Receivers 17-01-02
Intermediate Pressure Valves 02-02-03
Introduction 00-02-01
Isolation Control Unit 18-01-21

L

L (R) Eng Fire Switches 09-01-06
Landing Gear 15-01-03
Landing Gear (Down) 15-01-20
Landing Gear (Up) 15-01-19
Landing Gear Indication 15-01-21
Landing Gear Indications 15-01-17
Landing Gear Position and Warning System 15-01-02
Landing Sequences At Field Elevation Greater Than 7850 ft 02-04-06
Lateral Deviation Bar 11-01-19
Lateral Deviation Scale 11-01-21
Left and Right Hydraulic System 13-01-01
Left and Right Hydraulic System Cooling 13-01-04
Left Cockpit Lights Panel 16-01-03
Left Displays 11-01-27
Left Displays Reversion Switch 03-02-09
Left Hydraulic System Schematic 13-01-05
Left MFD 03-02-08

(Continued)

INDEX

Left Side Console 01-04-04
Life Rafts (Optional) 08-01-19
Low/Overspeed/Flap Speed Cues 11-01-11
Lubrication System 05-01-05

M

Mach Hold 18-01-09
Mach Trim 10-02-03
Magnetic Flux Detectors 11-01-16
Main and Park/Emer Brake Accumulators 15-01-14
Main Ejector 12-01-06
Main Gear Door 15-01-03
Main Gear Downlock Safety Pins 15-01-05
Main Landing Gear 15-01-03
Main Landing Gear Overheat Detection 09-01-10
Main Landing Gear Uplocks and Downlocks 15-01-03
Main Wheel Bins 15-01-03
Maintenance Diagnostics Computer 03-02-12
Maintenance Interphone Panels 06-01-05
Major Powerplant Components 18-01-03
Manual Pressurization Mode 02-04-03
Manual Release System (MRS) 15-01-10
Mask Containers 08-01-09
Master Disconnect Switch 04-01-23
Master Warning/Master Caution Switches 03-02-04
Max Power (APR) 18-01-07
Message/Message Sounds 03-03-06
Messages 03-03-01
METAR Overlay 11-02-29
METAR Reports Page 11-02-24
MFD E-Charts 11-02-02
MFD — HF Control Menu 06-01-10
MFD Control Panel 11-01-23
MFD Control Panel (MCP) 03-02-05
MFD Control Panel (MCP) 11-01-35
MFD Control Panel (MCP) 17-01-14
Mode S Transponder System 17-01-07
Mooring 01-03-03
Motive Flow 12-01-05
Multifunction Displays 11-01-22
Multifunction Displays (MFD) 11-01-34
Multi-Function/Primary Flight Display Visual Annunciations 11-01-37

N

N_1 and N_2 Synchronization 18-01-09
Nacelle Anti-Icing Valves 14-01-06
Navigation Alert Flags 11-01-20
Navigation Data 11-01-19
Navigation Displays 11-01-19
Navigation Source Indicator 11-01-19
NEXRAD Image 11-02-15
Normal Extension and Retraction 15-01-09
Normal-Rated Takeoff N_1 Indications (TO) 18-01-08

(Continued)

INDEX

Nose Doors 15-01-06
Nose Gear Downlock Safety Pin 15-01-08
Nose Landing Gear 15-01-06
Nosewheel Steering 15-01-15
Nosewheel Steering Tiller 15-01-21
Numbered Changes To The Manual 00-02-01
NWS Switch 15-01-21

O

Outflow Valve 02-04-01
Out-Of-Trim Indications 04-21-23
Overboard Discharge Indicator 08-01-04
Overlay Legends 11-02-28
Overlays 11-02-27
Overwater Emergency Equipment 08-01-17
Oxygen Cylinder 08-01-04
Oxygen Service Panel 08-01-05
Oxygen System 08-01-02
Oxygen System — Baseline Configuration 08-01-02
Oxygen System — Optional Configuration 08-01-03

P

Pagination 00-02-02
Park/Emer Brake 15-01-12
Passenger Cabin 08-01-11
Passenger Door 01-05-01
Passenger Door Annunciations 01-05-04
Passenger Masks 08-01-10
Passenger Oxygen Control Panel 08-01-19
Passenger Oxygen System 08-01-09
PFD Messages 04-01-25
PFD TCAS Indications 17-01-12
Pitch Disconnect 10-01-08
Pitch Tape and Chevrons 11-01-04
Pitot Static Probes 14-01-07
Pitot Static System 11-01-13
Placards 08-01-19
Pneumatic Sources 02-03-04
Pneumatic Supply 05-01-08
Power Centers 07-01-05
Power Section 05-01-04
Power Section and Gearbox 05-01-04
Power Transfer Unit 13-01-08
Pressure Fueling 12-01-07
Predicted RAIM 17-01-35
Pressurization 02-04-01
Pressurization Control Panel 02-04-05
Pressurization Schedule — Climb and Cruise 02-04-04
Pressurization Schedule — Descent and Hold (<25 000 ft) 02-04-04
Primary Flight Controls 10-01-02
Primary Flight Display (PFD) 11-01-34
Primary Flight Displays 11-01-03
Production Modification Data 00-02-02

(Continued)

INDEX

Protective Breathing Equipment....08-01-13
Proximity Sensing Electronic Unit....10-02-13
Proximity Sensing System....10-02-13
Proximity Sensing System....15-01-02

R

RA MIN....11-01-10
Radar Antenna....17-01-32
Radio Altitude Display....11-01-10
Radio Altitude Flag....11-01-10
Radio and Intercom Switches and Hand Microphones....06-01-03
Radio Interface Unit....06-01-12
Radio Interface Unit (RIU)....17-01-01
Radio Tuning and Operation....17-01-03
Ram Air Inlet....02-03-04
Ram Air Valve....02-03-04
Receiver/Transmitter....06-01-09
Recorder Unit....06-01-15
Reference Speeds....11-01-11
Refuel/Defuel Control Panel....12-01-09
Refuel/Defuel Single Point Adapter....12-01-08
Refueling/Defueling....12-01-07
Required Navigation Performance (RNP)....17-01-35
Resolution Advisory....17-01-10
Reverse Thrust Operation....18-01-21
Reversion Control Panel....11-01-36
Reversion Switch Panel....03-02-09
Reversion Switch Panel....11-01-27
Right Cockpit Lights Panel....16-01-04
Right Displays....11-01-28
Right Displays Reversion Switch....03-02-10
Right Hydraulic System Schematic....13-01-06
Right Side Console....01-04-05
Roll Scale and Pointer....11-01-05
Roll Spoilers....10-02-10
Roll Spoilers Disconnect....10-02-10
Rudder....10-01-03
Rudder Trim....10-02-02

S

Safety Valve....02-04-01
SATCOM (Optional)....06-01-11
Satcom Antenna....06-01-12
Satcom Antenna Control Unit....06-01-12
Satellite Data Unit (SDU)....06-01-12
Satellite Deselect....17-01-35
Scavenge Ejector....12-01-05
Secondary Flight Controls....10-02-01
Secondary Power Centers....07-01-06
SELCAL System (Optional)....06-01-11
Selected Heading Reference....11-01-18
Service Doors....01-05-09
SIGMET/AIRMET Reports....11-02-26
SIGMET/AIRMET Reports Page....11-02-26

(Continued)

INDEX

SIGMET Overlay 11-02-31
Single Loops 02-02-06
Sink Purging 01-05-07
Sky/Ground Display 11-01-04
Slip/Skid Indicator 11-01-05
SMKG/BELT Light 16-01-13
Smoke Detectors 09-01-11
Smoke Goggles 08-01-06
Spoiler Electronic Control Unit (SECU) 10-02-09
Spoiler System 10-02-08
Stall Protection System 10-02-13
Standby Compass 11-01-31
Standby Instrument 11-01-29
Standby Instrument 11-01-36
Standby Instrument Functions 11-01-29
Standby Instrument Lighting 16-01-05
Standby Instruments 11-01-29
Standby Pitot Probe 14-01-07
Standby Static Ports 14-01-07
Start and Ignition 05-01-07
Start Sequence 18-01-15
Starter 05-01-07
Starter Control Valve 18-01-15
Static Wicks 06-01-13
Station Identifier 11-01-20
Steering and Turning Radii 01-02-07
Steering and Turning Radii Schematic 01-02-07
Steering Control System 15-01-16
Steering Control Unit 15-01-15
Stick Pusher Disconnect Features 10-02-15
Surge Control Valve 05-01-08
System Operation 05-01-07
System Test 12-01-08
Systems Test 09-01-12
Systems Description 00-04-01
Systems Test Control Panel 03-02-02

T

TAF/METAR Reports 11-02-24
TAF Reports Page 11-02-25
3D Map Display (Optional) 11-01-24
T_2 Sensor 14-01-06
Takeoff and Return to Base 02-04-08
Takeoff and Return to Base Sequence At Field Elevation Greater Than 7850 ft ... 02-04-06
Takeoff Configuration Warning System 10-02-13
Takeoff From Airfield Above 7850 ft and Landing Field Elevation Above 7850 ft ... 02-04-07
Takeoff From Airfield Above 7850 ft and Landing Field Elevation
Less Than 7850 ft. 02-04-08
Takeoff From Airfield Less Than 7850 ft and Landing Field Elevation
Above 7850 ft. 02-04-07
Tank Construction 12-03-03
TAWS Modes 17-01-15
Mode 1 17-01-16

(Continued)

INDEX

Mode 2 17-01-17
Mode 3 17-01-19
Mode 4 17-01-20
Mode 5 17-01-23
Mode 6 17-01-24
Mode 7 17-01-26
TAWS WARN Panel 17-01-14
TCAS Mode Select....17-01-08
TCAS Resolution Advisories (RA) Inhibits 17-01-12
TCAS Voice Related Aural Alerts 17-01-11
Temperature Conversion Table 00-02-13
Terrain Awareness Alerting 17-01-27
Terrain Awareness Warning System (TAWS) 17-01-13
Terrain Clearance Floor (TCF) 17-01-29
The Manual 00-02-01
Thrust Calculations....18-01-07
Thrust Lever Quadrant and Engine Control Panel 18-01-23
Thrust Levers 18-01-17
Thrust Mode Annunciation 18-01-08
Thrust Reverse Levers 18-01-07
Thrust Reverser....18-01-19
Thrust Reverser System....18-01-19
Tires and Brakes 15-01-11
To/From Indicator 11-01-21
Tops/Movement Image 11-02-16
Total Air Temperature Probe....11-01-14
Total Air Temperature Probe (TAT) 14-01-07
Towing 01-03-02
Track Pointer 11-01-19
Traffic Advisory....17-01-10
Traffic Alert and Collision Avoidance System....17-01-08
Transponder Modes 17-01-07
Trend Vector 11-01-11
Trim Air System 02-03-01
Tune 11-01-28
Tune Switch....03-02-10
Tuning Reversion 06-01-09
Turbulence Image....11-02-19

U

Unloading Of Hydraulic Pump For Inflight Restarts....13-01-04

V

Vent System 12-01-05
Vertical Deviation Display....11-01-05
Vertical Navigation....11-01-09
Vertical Speed Field 11-01-09
VHF Communication 06-01-06
VHF Navigation System 17-01-02
Vibration Monitoring System 18-01-22
Visual Eye References For Ground Operation....01-02-06

INDEX

W

Water Drain Valves....12-01-04
Weather Radar....17-01-31
Weather Radar Operational Modes....17-01-31
Winds/Temps Image....11-02-18
Windshield and Side Window Heating....14-01-08
Windshield Ice and Rain Protection....14-01-08
Wing Anti-Ice Ducts....14-01-04
Wing Anti-Ice System....14-01-03
Wing Anti-Ice System Schematic....14-01-05
Wing Anti-Icing Valves....14-01-04
Wing Isolation Valve....14-01-04
Wing Overheat....14-01-04
Wing Temperature Sensors....14-01-03
WX Depiction Image....11-02-17

Y

Yaw Damper....04-01-23
Yaw Damper....10-01-06

SYSTEMS DESCRIPTION

AIRPLANE GENERAL	Chapter 1
AIR CONDITIONING AND PRESSURIZATION	Chapter 2
AURAL/VISUAL ALERTS	Chapter 3
AUTOMATIC FLIGHT CONTROLS	Chapter 4
AUXILIARY POWER UNIT	Chapter 5
COMMUNICATIONS	Chapter 6
ELECTRICAL	Chapter 7
OXYGEN AND EMERGENCY EQUIPMENT	Chapter 8
FIRE EQUIPMENT	Chapter 9
FLIGHT CONTROLS	Chapter 10
FLIGHT INSTRUMENTS	Chapter 11
FUEL	Chapter 12
HYDRAULICS	Chapter 13
ICE AND RAIN PROTECTION	Chapter 14
LANDING GEAR	Chapter 15
LIGHTING	Chapter 16
NAVIGATION	Chapter 17
POWERPLANT	Chapter 18

Introduction 01-02-01
Aircraft Dimension Schematic 01-02-02
Antenna Location Schematic 01-02-05
Visual Eye References For Ground Operation 01-02-06
Steering and Turning Radii 01-02-07
Steering and Turning Radii Schematic 01-02-07
Danger Areas 01-02-08
Airplane Jacking 01-03-01
Towing 01-03-02
Mooring 01-03-03
Crew Seat Assembly 01-04-01
Eye Locator — Seat Adjustment 01-04-02
Cockpit Layout 01-04-03
    Left Side Console 01-04-04
    Right Side Console 01-04-05
    Center Pedestal 01-04-06
    Instrument Panel 01-04-07
Circuit Breaker Panels 01-04-08
    CB 1 Pilot Circuit Breaker Panel (Typical) 01-04-08
    CB 2 Copilot Circuit Breaker Panel (Typical) 01-04-09
    CB 3 Left Side Equipment Rack Circuit Breaker Panel (Typical) 01-04-10
    CB 4 Right Side Equipment Rack Circuit Breaker Panel (Typical) 01-04-11
    CB 5 Left DC Power Center Circuit Breaker Panel (Typical) 01-04-12
    CB 6 Right DC Power Center Circuit Breaker Panel (Typical) 01-04-12
Control Wheel 01-04-13
Passenger Door 01-05-01
    Description 01-05-01
    Components And Operation 01-05-01
    Door Latching Mechanism 01-05-04
    Passenger Door Annunciations 01-05-04
Emergency Exit 01-05-05
    Description 01-05-05
    Components And Operation 01-05-05
    Emergency Exit Annunciations 01-05-06
Cabin Equipment 01-05-06
    Description 01-05-06
    Components And Operation 01-05-06
Cargo Bay Door 01-05-08
    Description 01-05-08
    Components And Operation 01-05-08
    Cargo Bay Door Annunciations 01-05-08
Service Doors 01-05-09
    Components And Operation 01-05-10
    Aft Equipment Bay Door Annunciation 01-05-11
Door Warning System 01-05-12
    Description 01-05-12
    Components And Operation 01-05-12
EICAS Messages 01-05-13

INTRODUCTION

The Challenger 300 aircraft, manufactured by Bombardier Aerospace, is an all metal, pressurized, low-wing, turbofan-powered monoplane. The high-aspect ratio, fully cantilevered, swept-back wings with winglets are of conventional riveted construction except for the upper section of the winglets, which utilize full-depth honeycomb core bonded to the outer skin. The fuselage is of semimonocoque construction and utilizes a constant circular cross-sectional shape fuselage.

Thrust is provided by two pod-mounted AS907 turbofan engines manufactured by Honeywell. Independent fuel systems supply fuel to the engines with fuel storage provided in wing tanks. Engine-driven hydraulic pumps provide hydraulic power for braking, extending or retracting the landing gear, nosewheel steering, wing flaps, spoilers, thrust reversers, elevator, and rudder. The landing gear system is a fully retractable tricycle-type trailing link landing gear with dual main gear wheels, nosewheel steering, and a brake-by-wire brake control/anti-skid braking system.

The ailerons are manually controlled, and the elevator and rudder are controlled via hydraulic actuators. An electrically actuated trim tab is installed on the left aileron to provide lateral trim. Longitudinal trim is accomplished by changing the incidence of the horizontal stabilizer with an electrically operated linear actuator. Rudder trim is accomplished via an electromechanical actuator which moves the rudder surface independent of the rudder pedal position. Aircraft air-conditioning systems which include an air-cycle machine, provide heating, cooling, and pressurization for the cockpit, passenger compartment, and lavatory.

AIRCRAFT DIMENSION SCHEMATIC

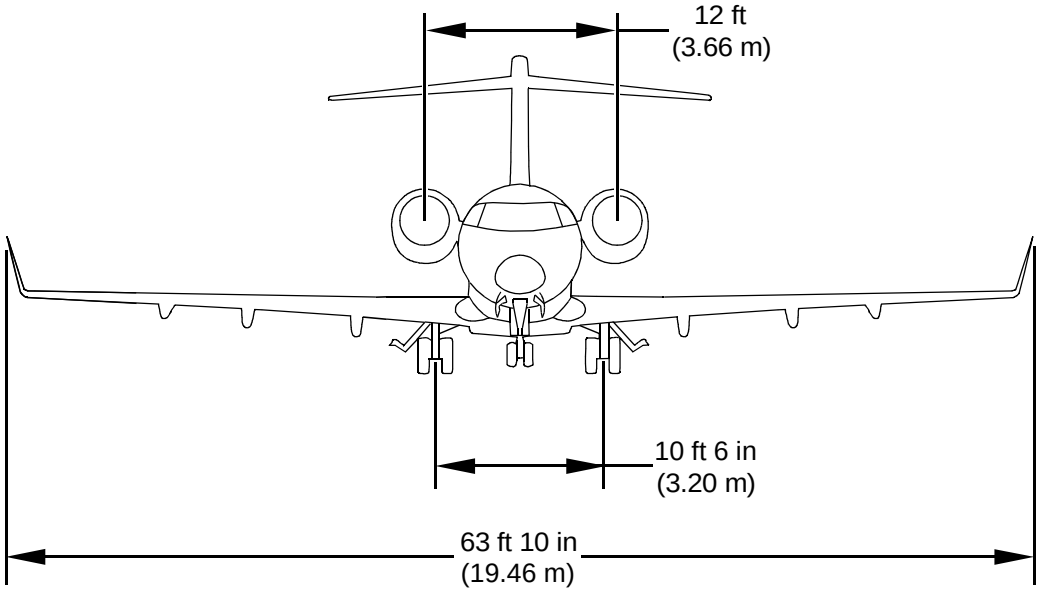

NOTES

1. Measurement at manufacturer empty weight.

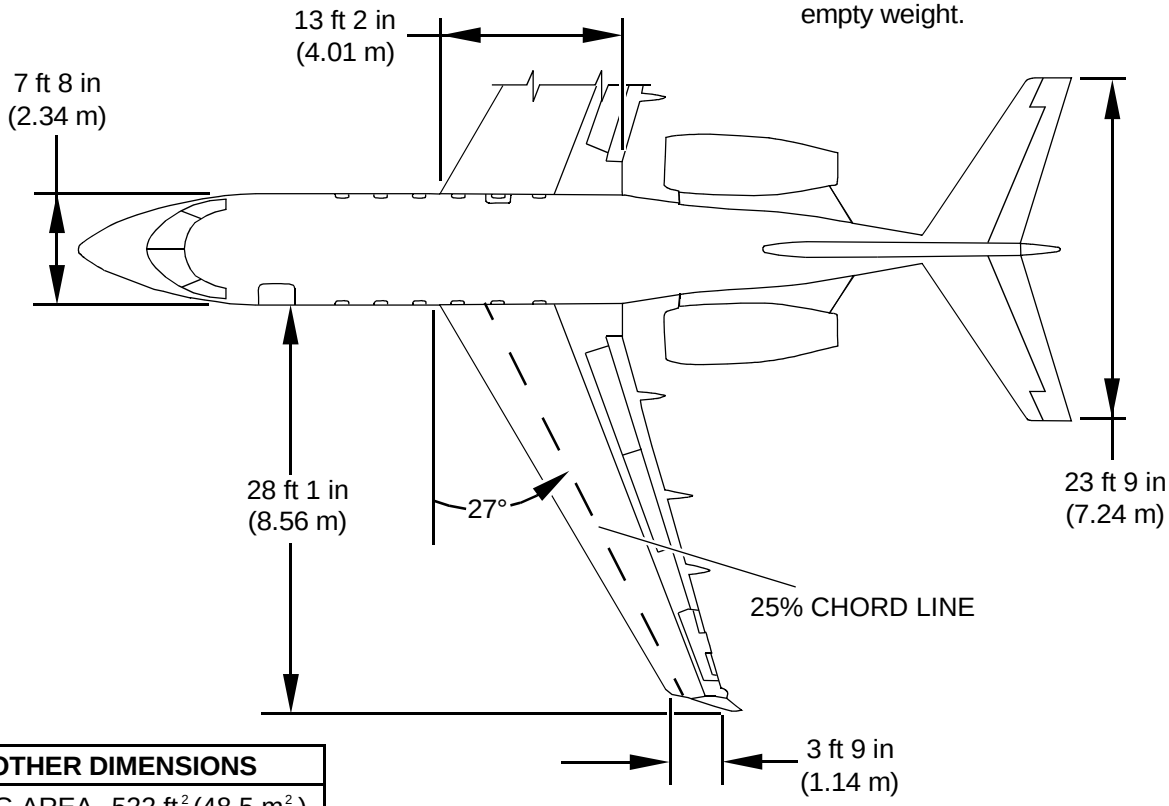

OTHER DIMENSIONS	
WING AREA	522 ft^2 (48.5 m^2)
WING BASE	27.8 ft (8.5 m)

CFO0101002_015

AIRCRAFT DIMENSION SCHEMATIC (Cont)

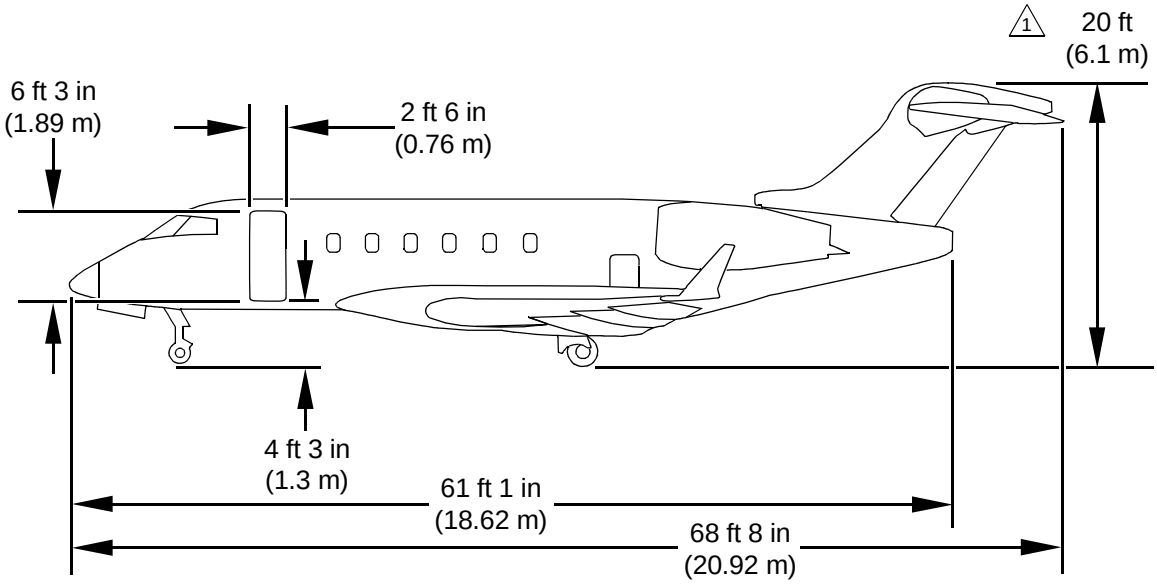

NOTES

1 Measurement at manufacturer empty weight.

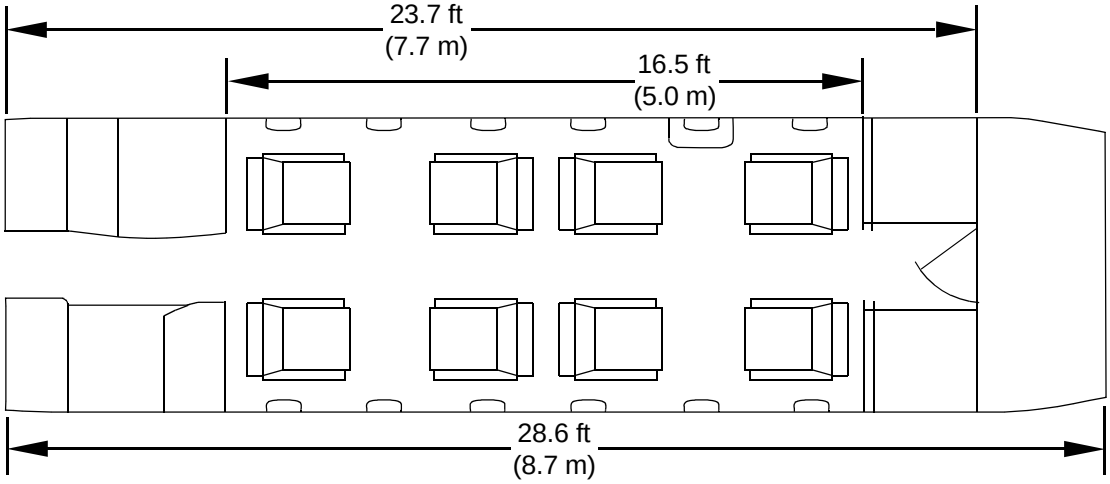

CFO0101002_016

AIRCRAFT DIMENSION SCHEMATIC (Cont)

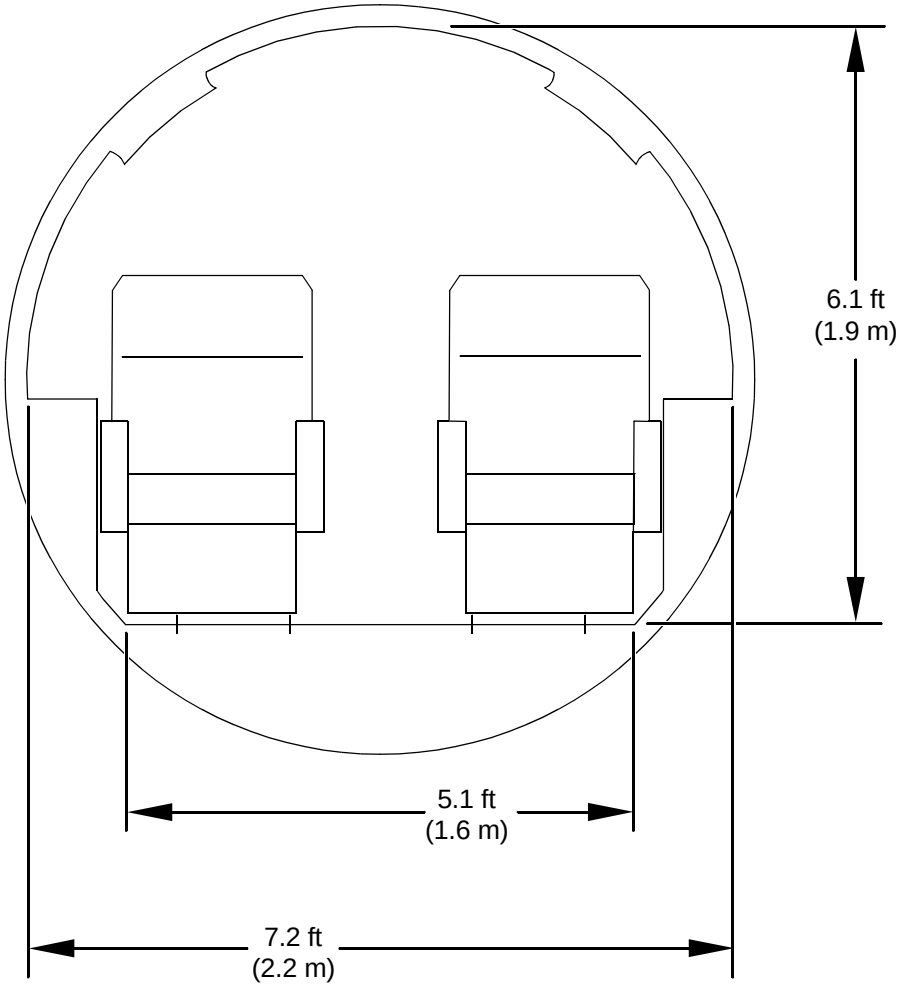

PASSENGER COMPARTMENT DIMENSIONS		
LENGTH	28 ft 7 in	8.71 m
WIDTH (FLOOR LINE)	5 ft 1 in	1.55 m
WIDTH CENTERLINE	7 ft 2 in	2.18 m
HEIGHT	6 ft 1 in	1.85 m
VOLUME	896 ft^3	25.37 m^3
FLOOR AREA	146 ft^2	13.5 m^2

CFO0101002_017

ANTENNA LOCATION SCHEMATIC

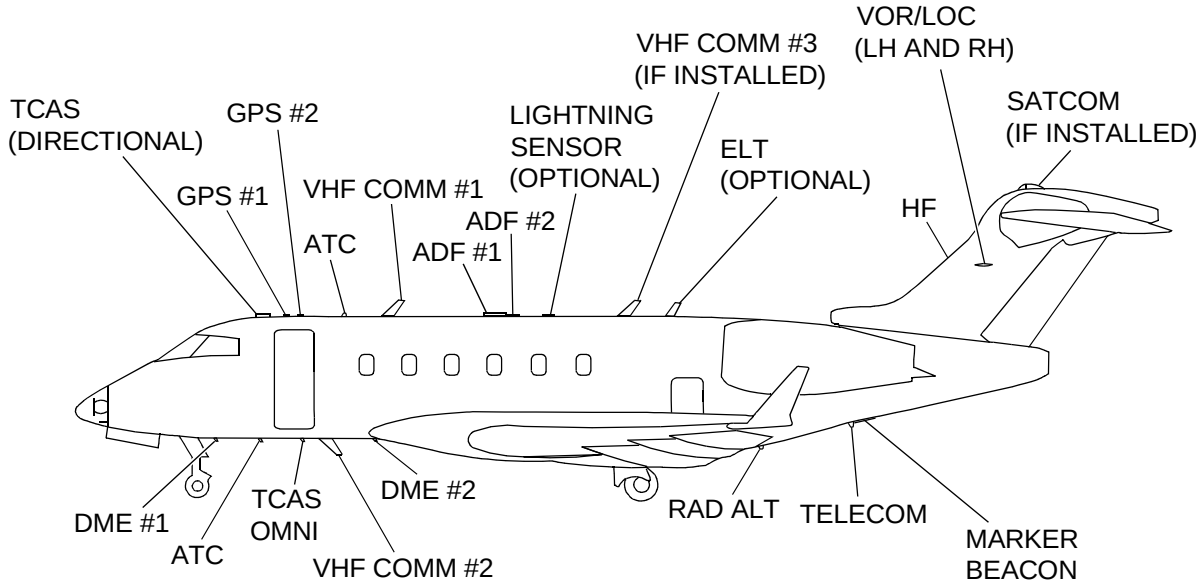

WARNING

Personnel should not stand nearby and in front of the radar antenna when it is transmitting. When the antenna is not scanning, the danger increases.

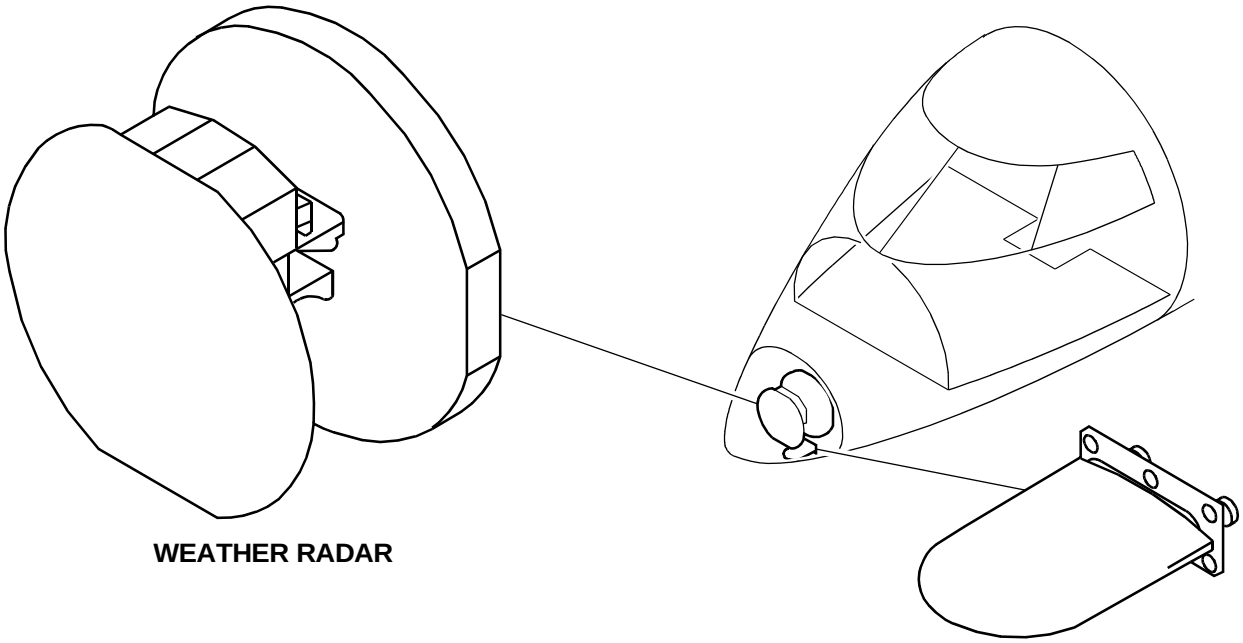

CFO0101002_005

VISUAL EYE REFERENCES FOR GROUND OPERATION

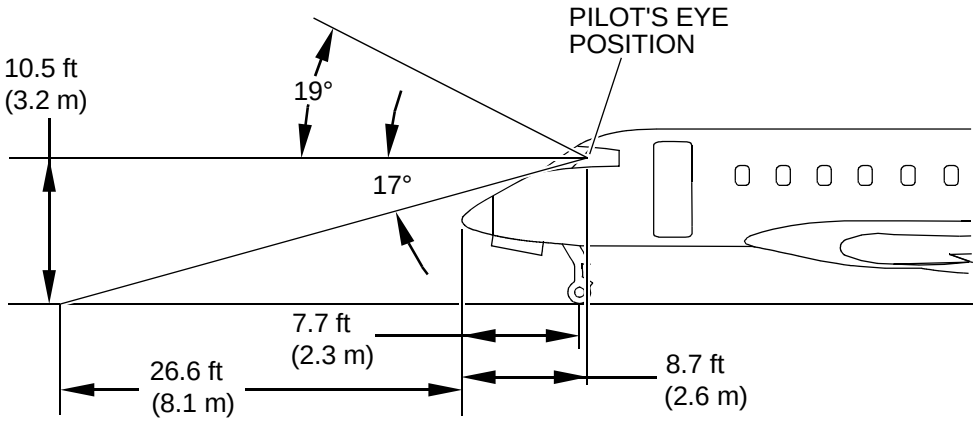

NOT FOR LANDING
APPROACH VISIBILITY

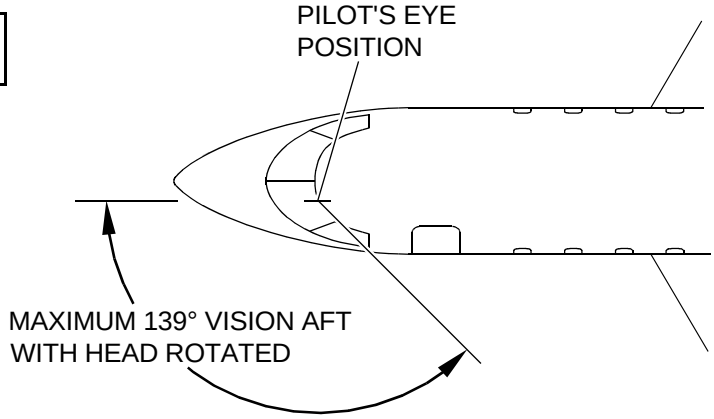

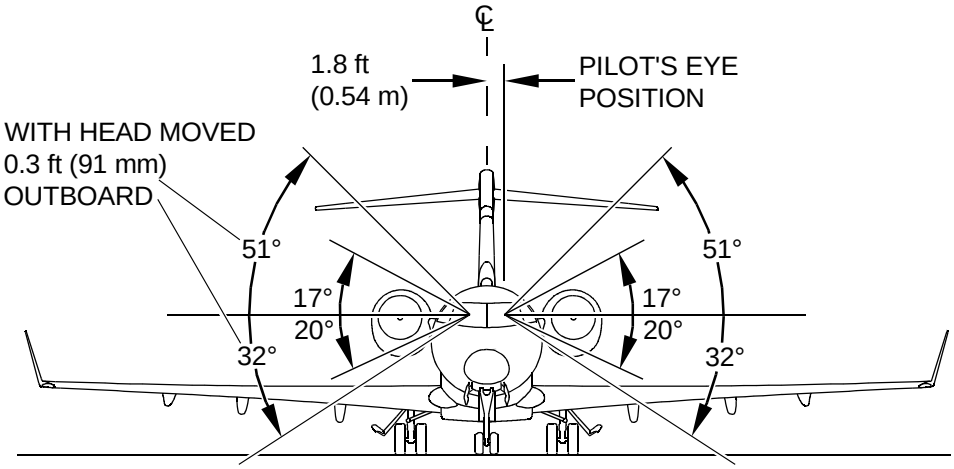

STEERING AND TURNING RADII

Steering and turning radii are shown below.

STEERING AND TURNING RADII SCHEMATIC

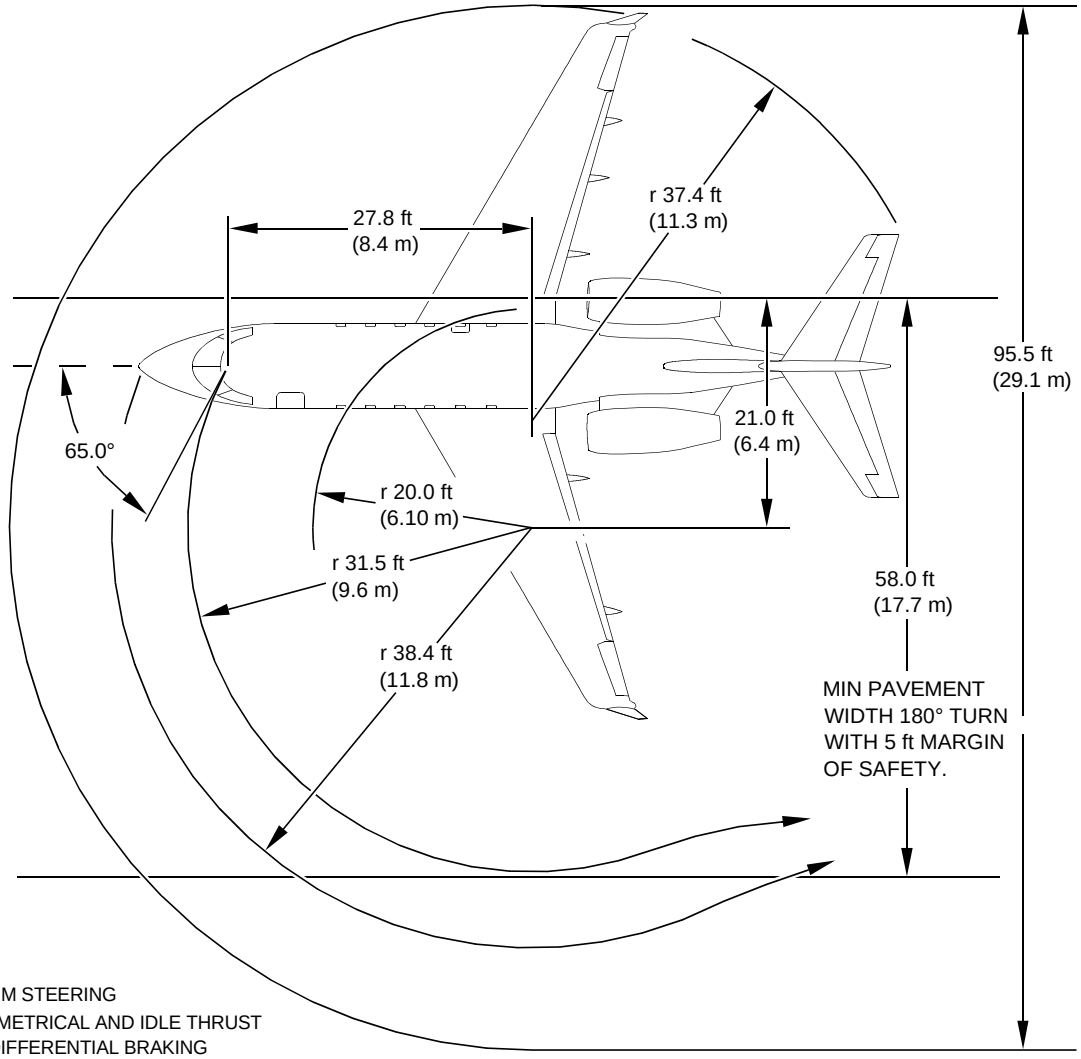

NOTE

MAXIMUM STEERING
- SYMMETRICAL AND IDLE THRUST
- NO DIFFERENTIAL BRAKING
- 65° STEERING ANGLE
- 3° SLIP
- DRY RUNWAY
- SLOW CONTINUOUS TURN
- MAX A/C WEIGHT
- AFT CG

CFO0101002_006

DANGER AREAS

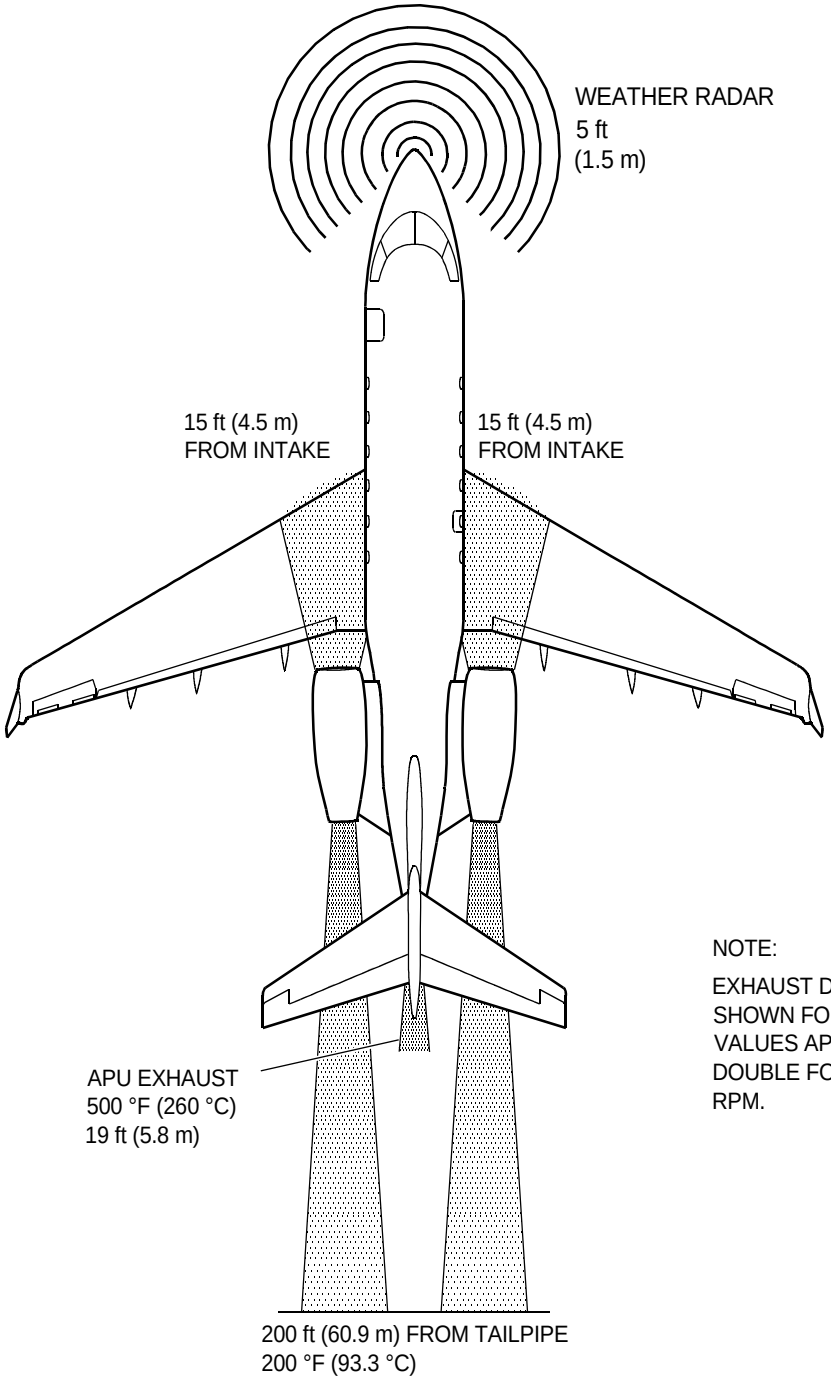

NOTE:

EXHAUST DANGER AREA SHOWN FOR IDLE RPM. VALUES APPROXIMATELY DOUBLE FOR TAKEOFF RPM.

CFO0101002_019

AIRPLANE JACKING

Three jacking points are provided, one located forward on the fuselage, and one on each wing at the rear spar for jacking the complete airplane.

Gear jacking points are also provided for tire/wheel/brake changes. Jacking procedures are located in the *Aircraft Maintenance Manual* (Chapter 7).

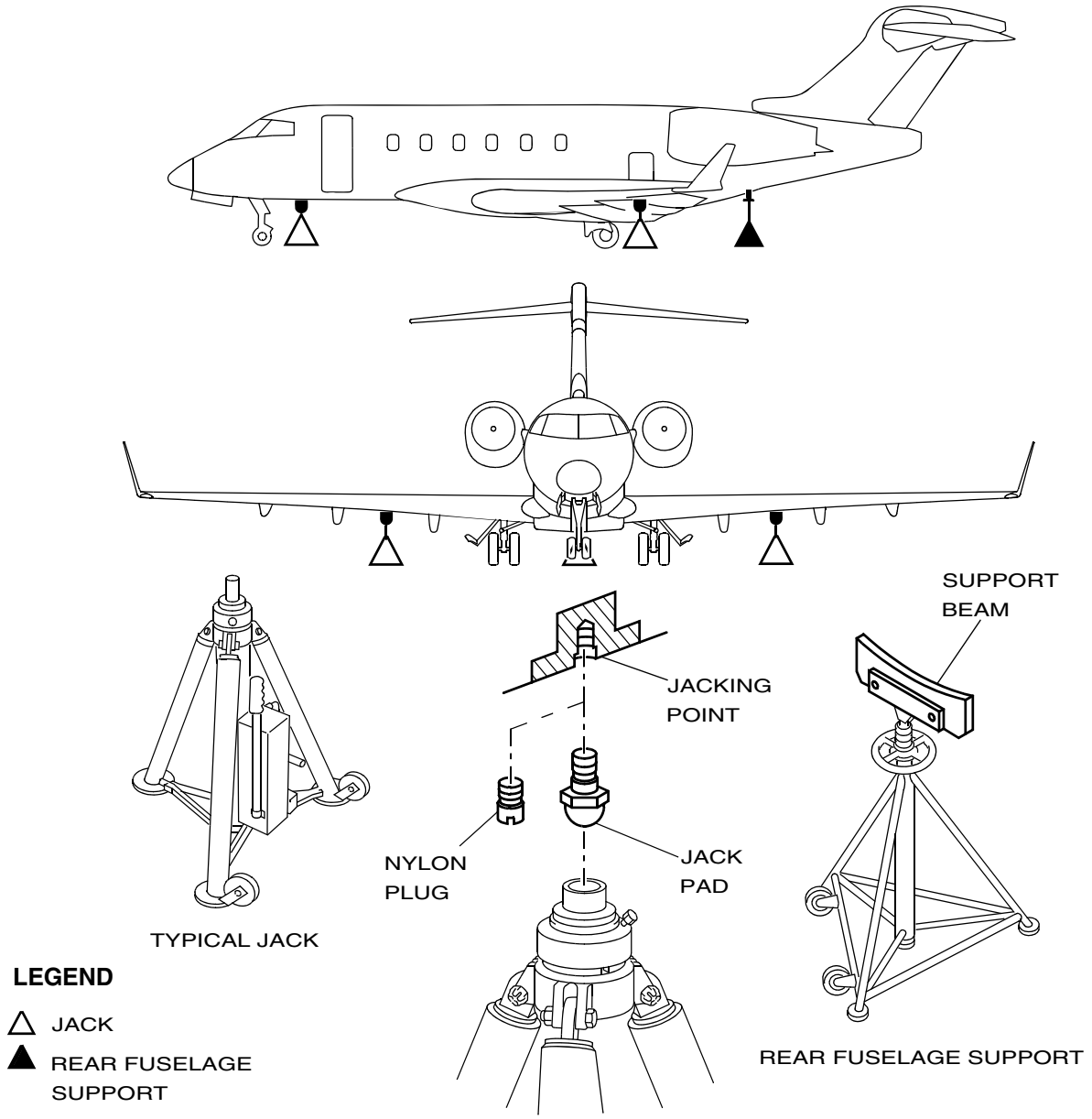

TOWING

The aircraft may be towed with the torque links connected and the Steering Control System de-energized, up to a limit of 120° of nosewheel angle. Should the nosewheel angle exceed this value a NWS LIMT EXCEEDED (C) CAS message will be displayed. At approximately 123°, the indicator pins on the nose landing gear will be sheared off to provide a physical indication that damage may have been done to the feedback linkage and surrounding area.

For special hangar operations, the torque links may be disconnected to allow towing at any angle, provided the length of chrome visible on the shock strut meets the minimum requirement provided on the warning plate. The warning plate is mounted on the nose landing gear to indicate to the ground crew the operational limits for towing. For further towing information refer to the *Aircraft Maintenance Manual (Chapter 9).*

TOWING BAR ATTACHMENT

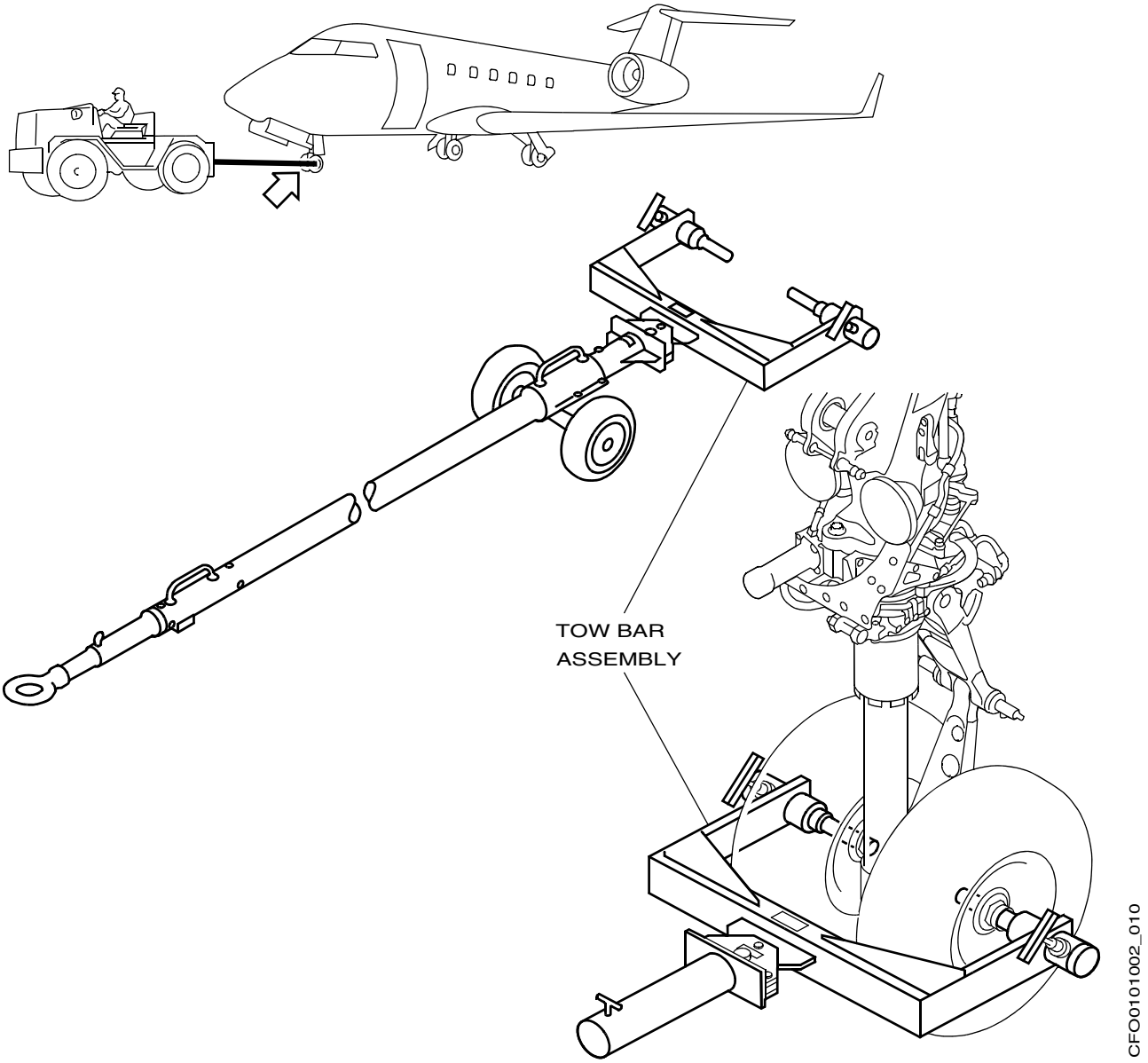

MOORING

Fittings are provided on the fuselage and on the wing jacking points for mooring the airplane. Use chocks on all wheels when mooring the airplane. Mooring procedures are located in the *Aircraft Maintenance Manual* (Chapter 10).

MOORING ATTACHMENT POINTS

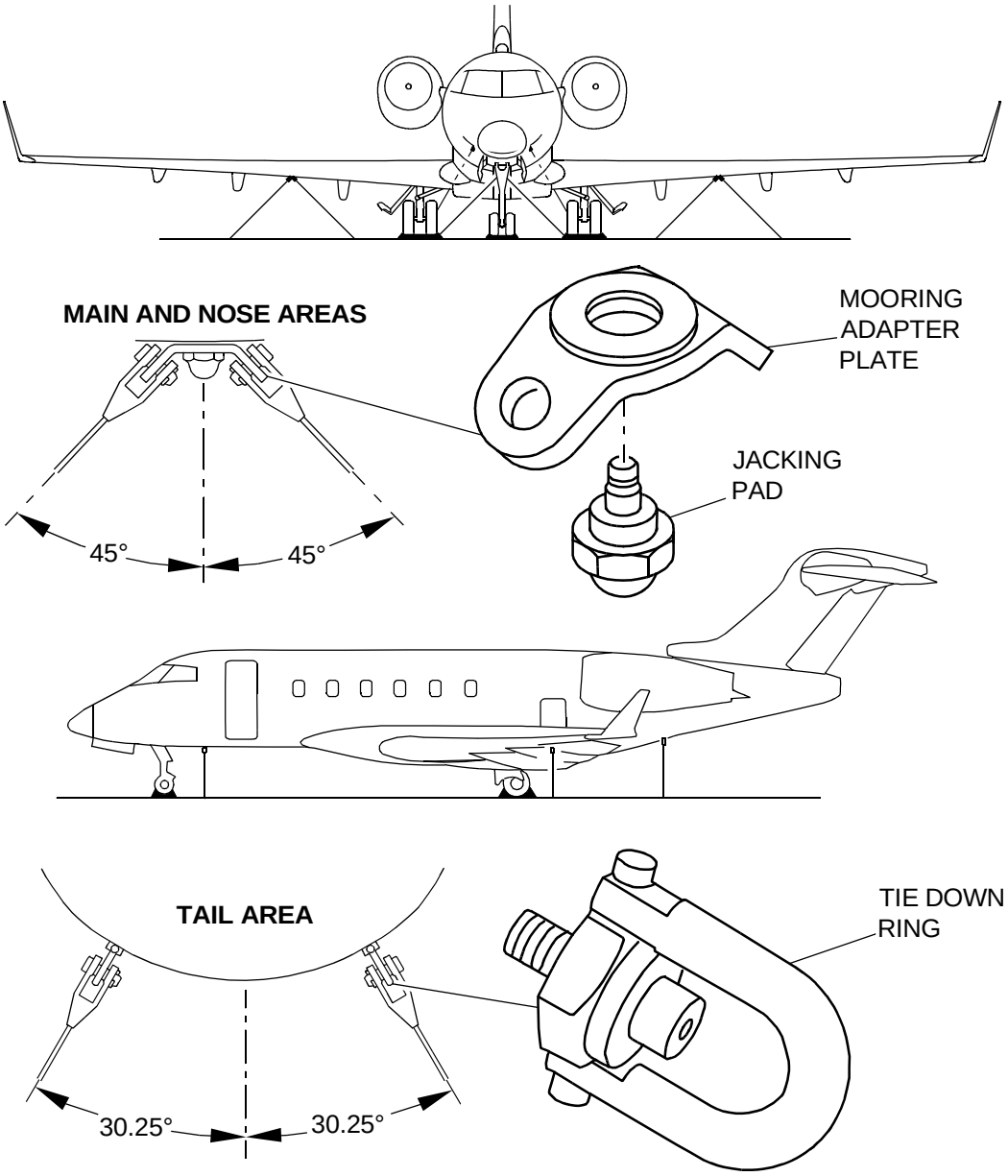

CREW SEAT ASSEMBLY

The crew seats provide adjustments fore and aft, recline adjustment, height and armrest position.

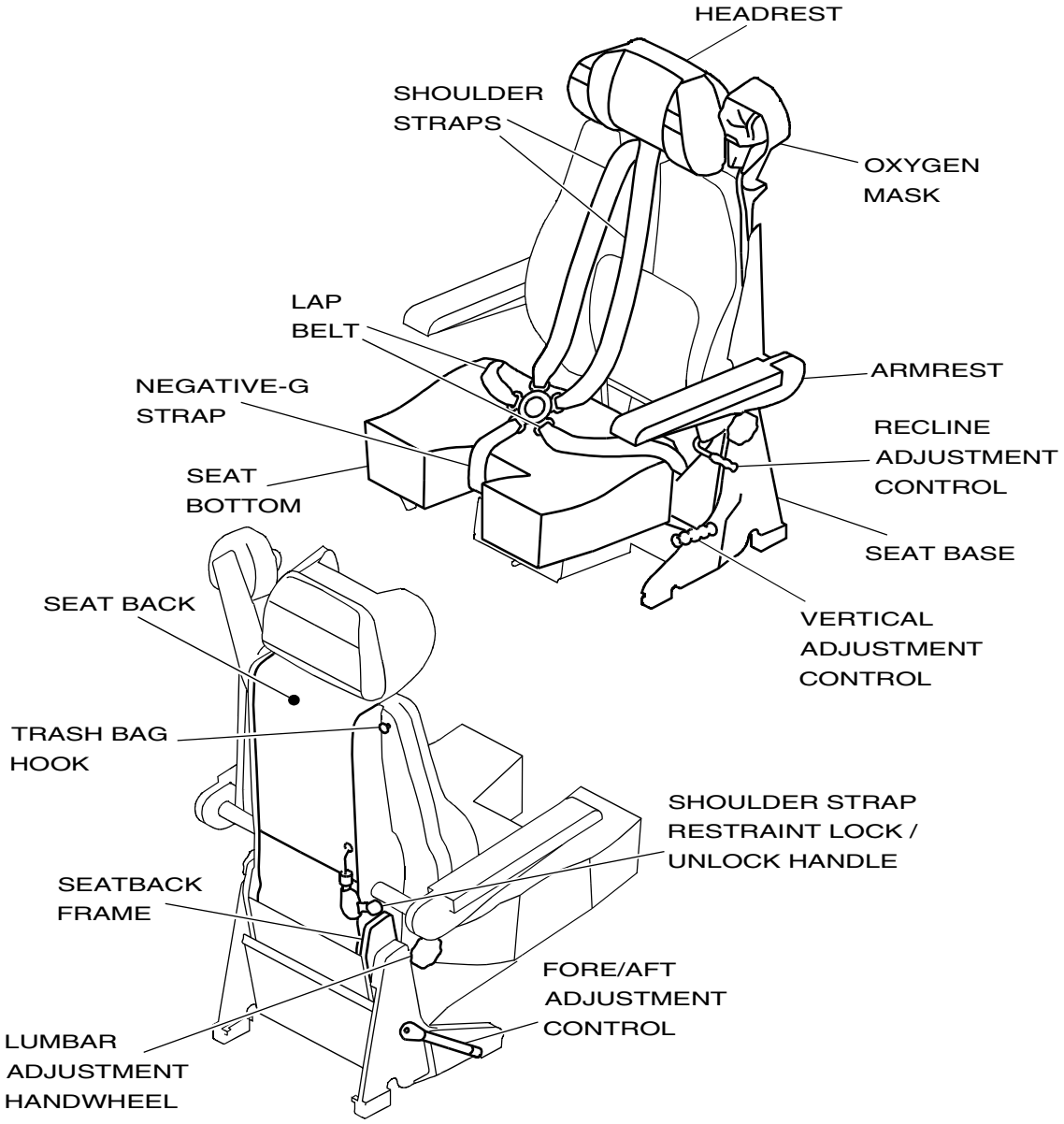

EYE LOCATOR — SEAT ADJUSTMENT

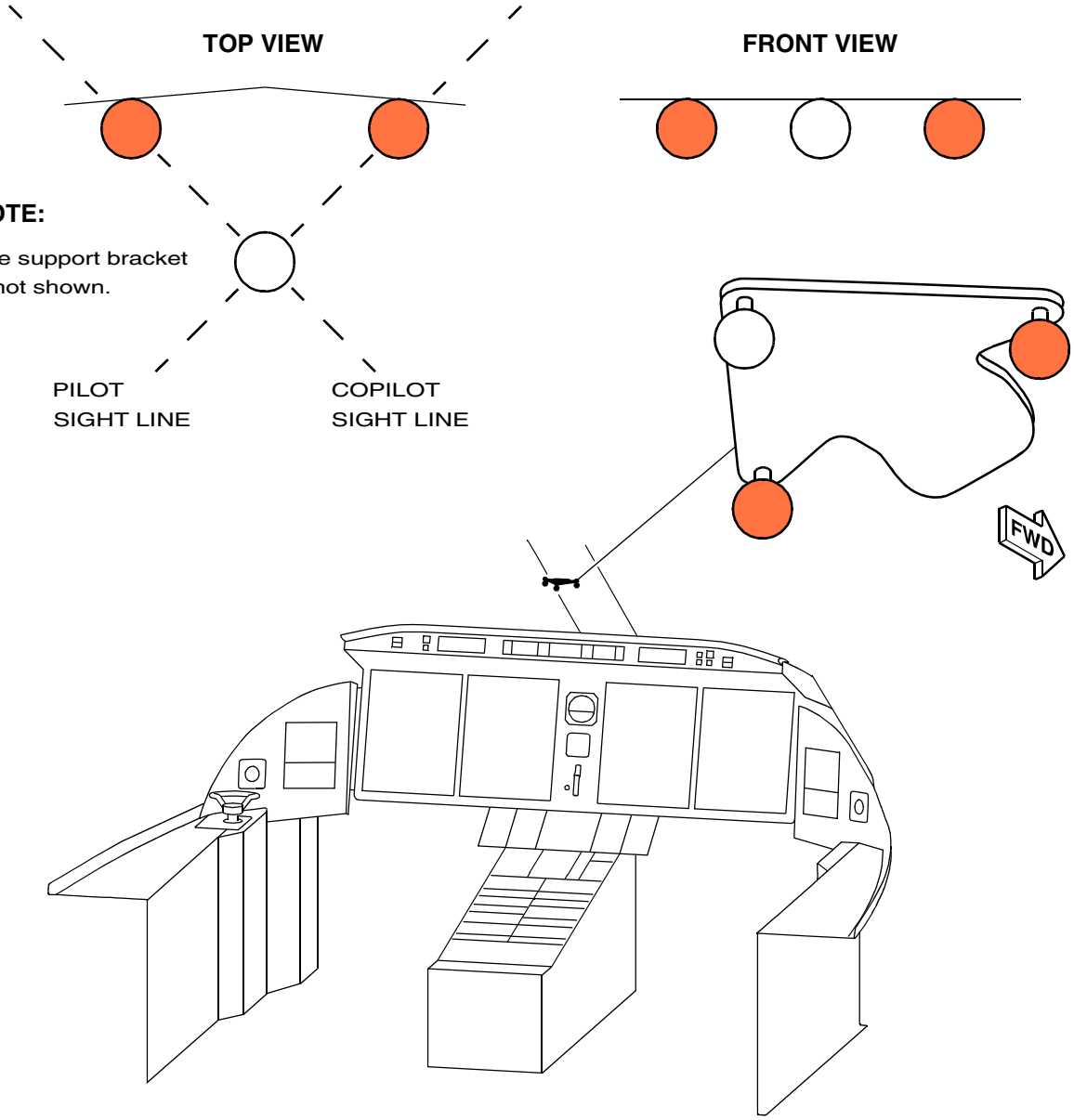

An eye locator is mounted on the center windshield post to enable seat adjustment for correct eye-to-wheel height. Proper sight line is attained when the rear ball is no longer seen, as it will be covered by the white ball in front.

Correct seat placement is obtained (height, fore, aft) when:

- All flight controls are unrestricted throughout full travel
- Flight instruments and warning lights visible, without being obstructed
- Out-of-cockpit visibility unobstructed
- Seat position comfortable

COCKPIT LAYOUT

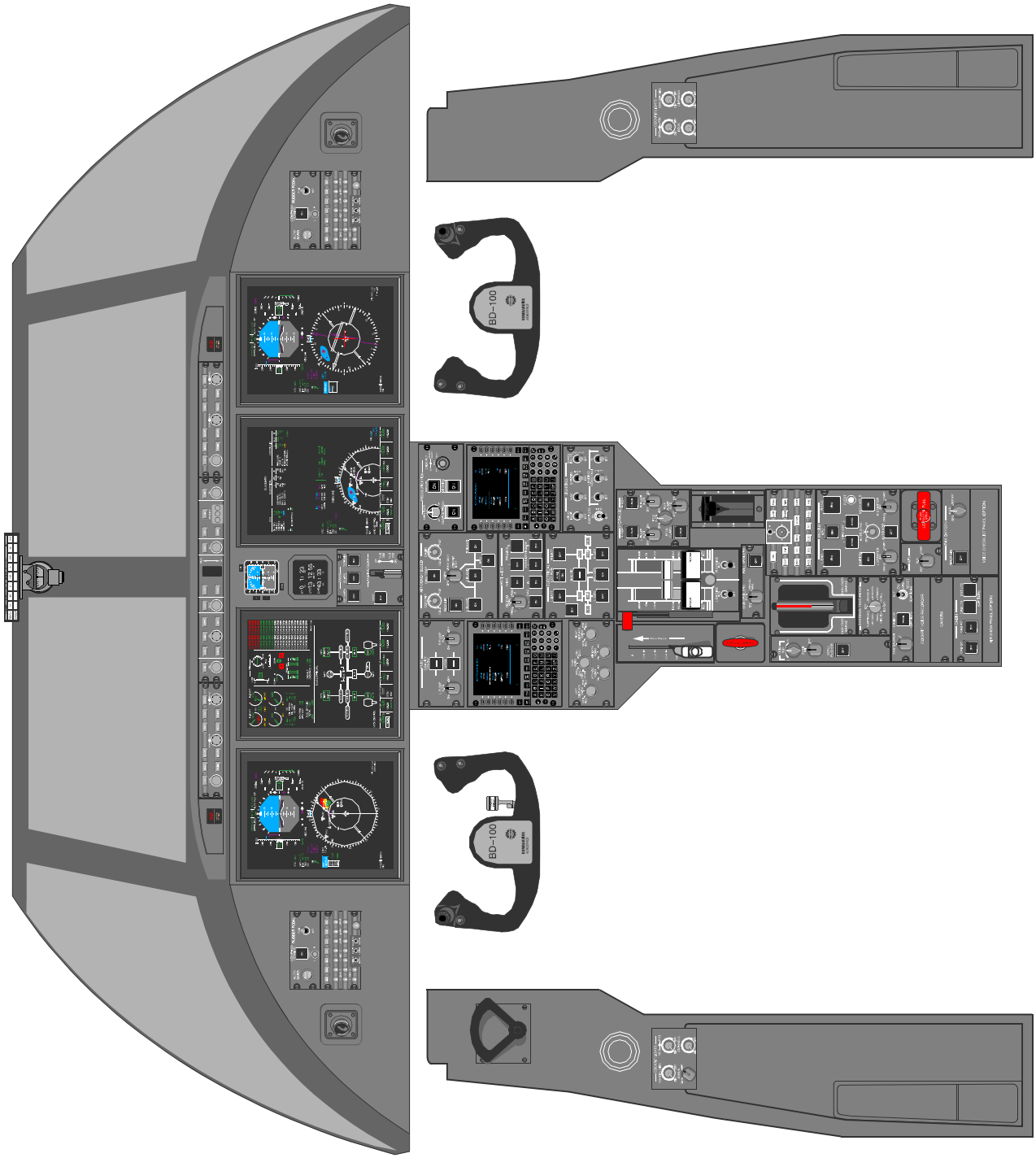

Flight Deck (typical)

COCKPIT LAYOUT (Cont)

LEFT SIDE CONSOLE

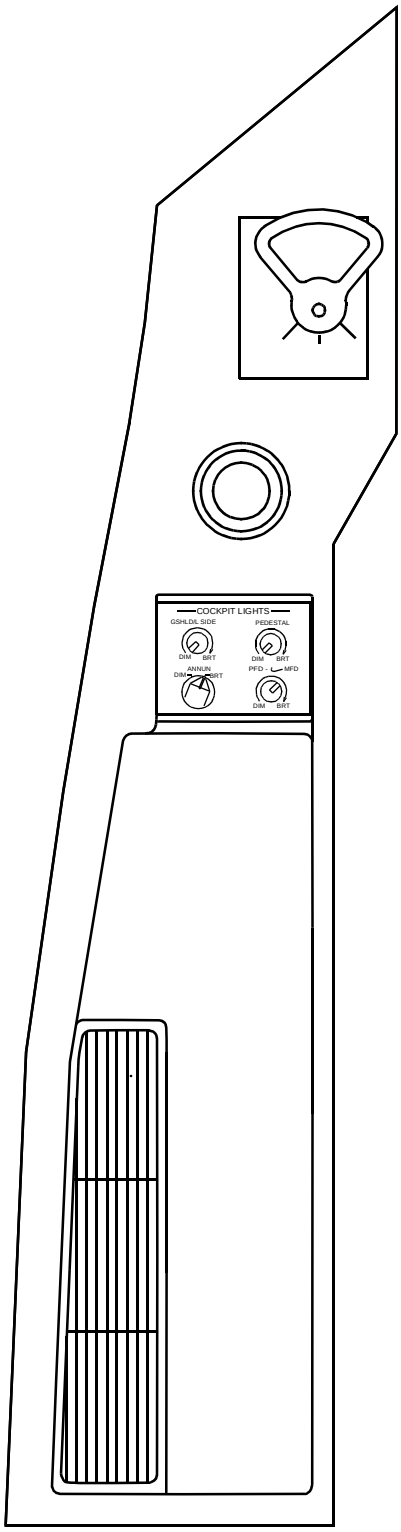

CFO0100002_002

COCKPIT LAYOUT (Cont)

RIGHT SIDE CONSOLE

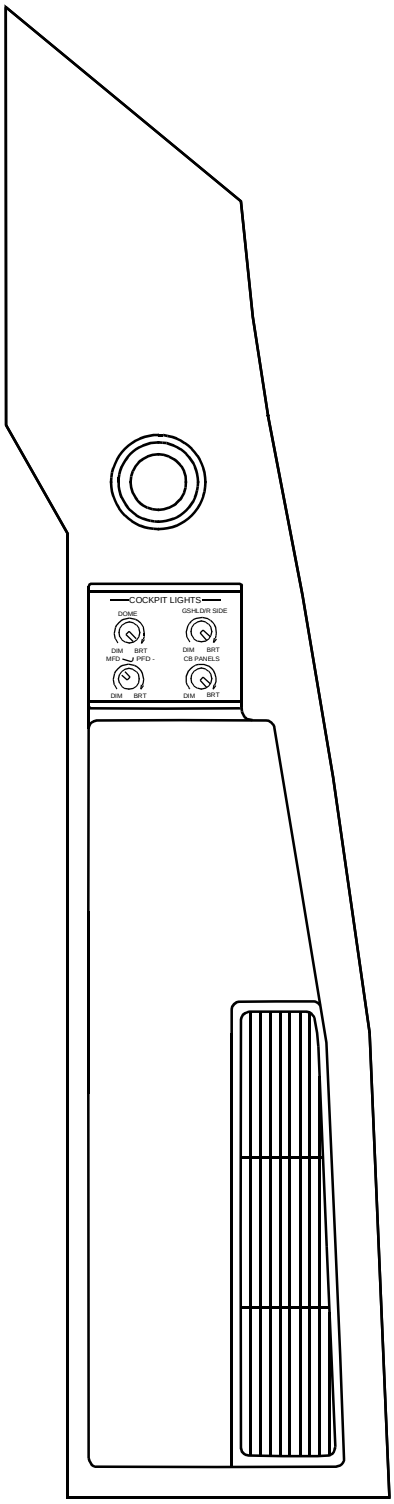

CFO0100002_003

COCKPIT LAYOUT (Cont)

CENTER PEDESTAL

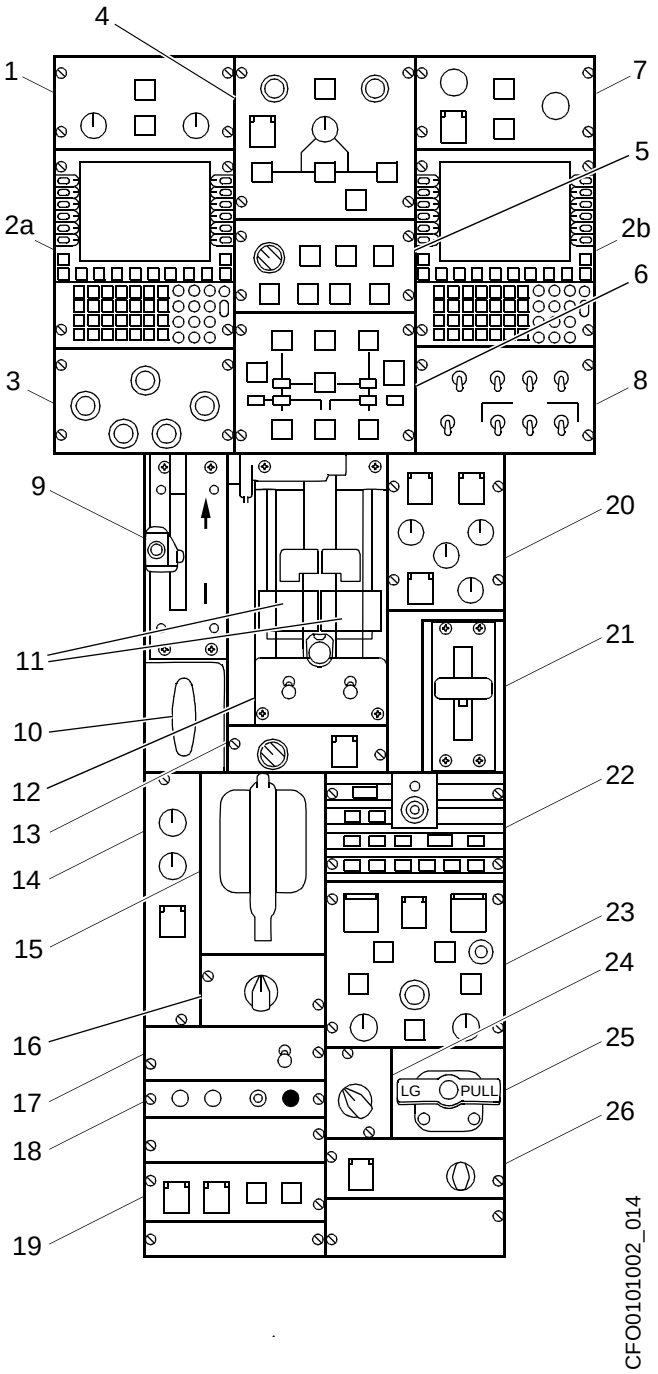

1. FUEL PANEL
2a. FMS CONTROL DISPLAY UNIT (OPTIONAL)
2b. FMS CONTROL DISPLAY UNIT (STANDARD)
3. REVERSION PANEL
4. AIR CONDITIONING/BLEED PANEL
5. ANTI-ICE PANEL
6. ELECTRICAL PANEL
7. PRESSURIZATION PANEL
8. LIGHTING PANEL
9. FLIGHT SPOILERS HANDLE
10. PITCH DISCONNECT HANDLE
11. THRUST LEVERS
12. ENGINE RUN SWITCH PANEL
13. GROUND SPOILERS/ROLL SPOILERS PANEL
14. TRIM AND STALL PANEL
15. PARK/EMER BRAKE HANDLE
16. SYSTEM TEST PANEL
17. ELT PANEL
18. COCKPIT VOICE RECORDER PANEL
19. CABIN CONTROL PANEL
20. HYDRAULIC PANEL
21. FLAP LEVER
22. MFD CONTROL PANEL (MCP)
23. ENGINE PANEL
24. APU SWITCH
25. LANDING GEAR MANUAL RELEASE HANDLE
26. PAX OXYGEN PANEL

Center Pedestal (Typical)

COCKPIT LAYOUT (Cont)

INSTRUMENT PANEL

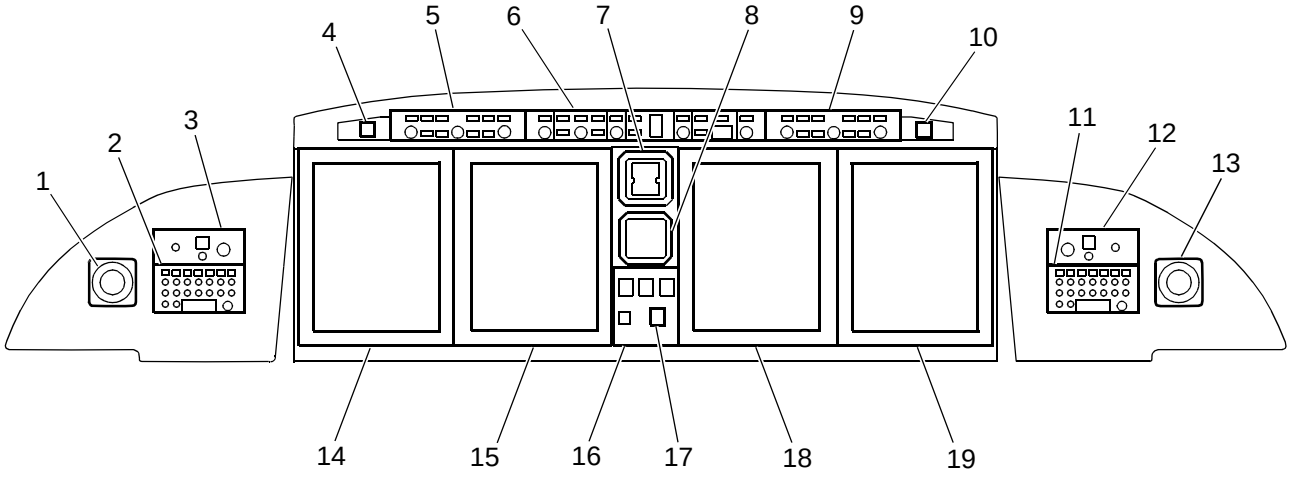

1. AIR OUTLET
2. PILOT AUDIO CONTROL PANEL
3. PILOT COMPASS/BARO/RUDDER PEDAL ADJUSTMENT
4. MASTER WARNING/CAUTION
5. PILOT DISPLAY CONTROL PANEL (DCP)
6. FLIGHT GUIDANCE PANEL (FGP)
7. STANDBY INSTRUMENT
8. CLOCK
9. COPILOT DISPLAY CONTROL PANEL (DCP)
10. MASTER WARNING/CAUTION
11. COPILOT AUDIO CONTROL PANEL
12. COPILOT COMPASS/BARO/RUDDER PEDAL ADJUSTMENT
13. AIR OUTLET
14. LEFT PRIMARY FLIGHT DISPLAY (PFD)
15. LEFT MULTI FUNCTION DISPLAY (MFD)
16. TAWS WARNING PANEL
17. LANDING GEAR HANDLE
18. RIGHT MULTI FUNCTION DISPLAY (MFD)
19. RIGHT PRIMARY FLIGHT DISPLAY (PFD)

CFO0104002_004

CIRCUIT BREAKER PANELS

CB 1 PILOT CIRCUIT BREAKER PANEL (TYPICAL)

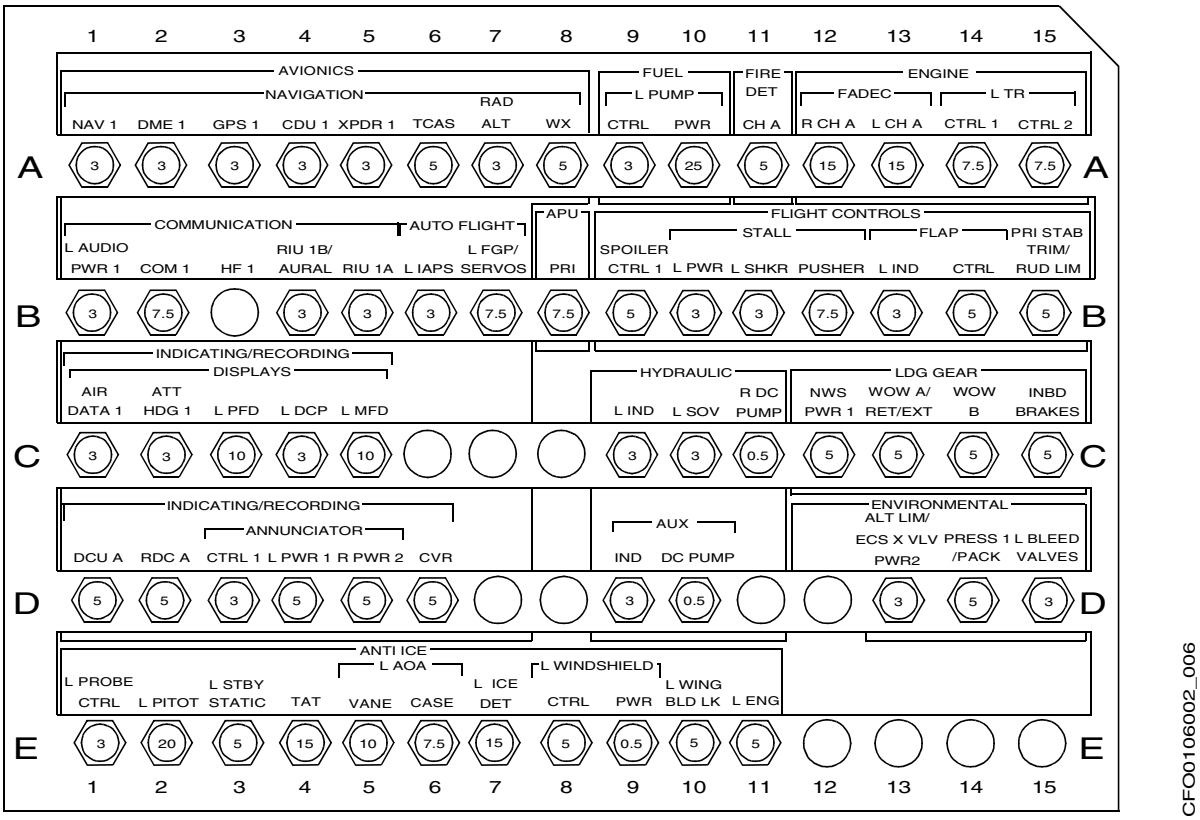

CIRCUIT BREAKER PANELS (Cont)

CB 2 COPILOT CIRCUIT BREAKER PANEL (TYPICAL)

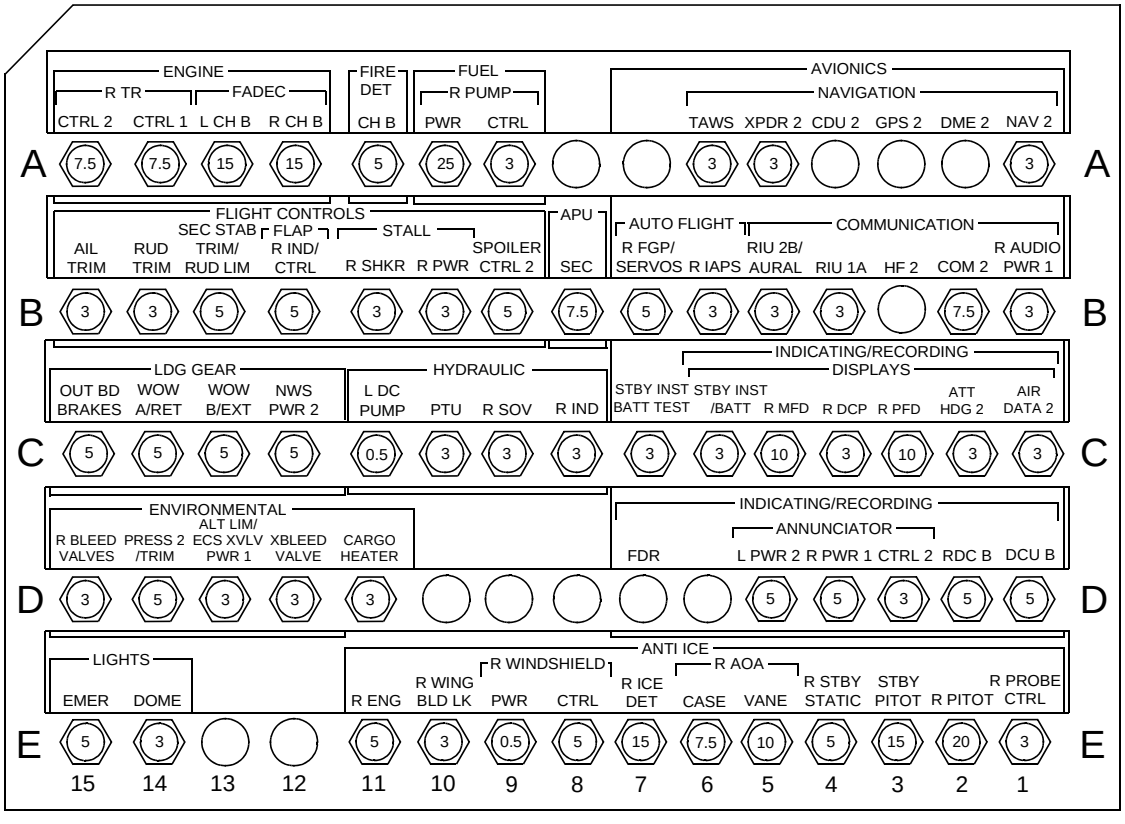

CIRCUIT BREAKER PANELS (Cont)

CB 3 LEFT SIDE EQUIPMENT RACK CIRCUIT BREAKER PANEL (TYPICAL)

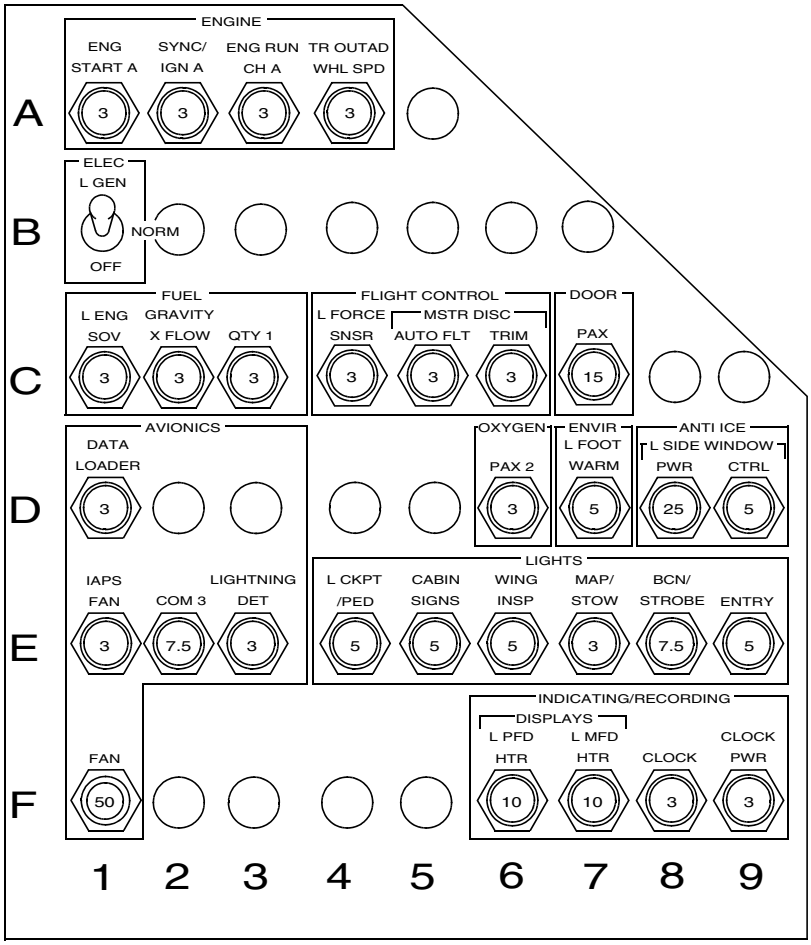

CIRCUIT BREAKER PANELS (Cont)

CB 4 RIGHT SIDE EQUIPMENT RACK CIRCUIT BREAKER PANEL (TYPICAL)

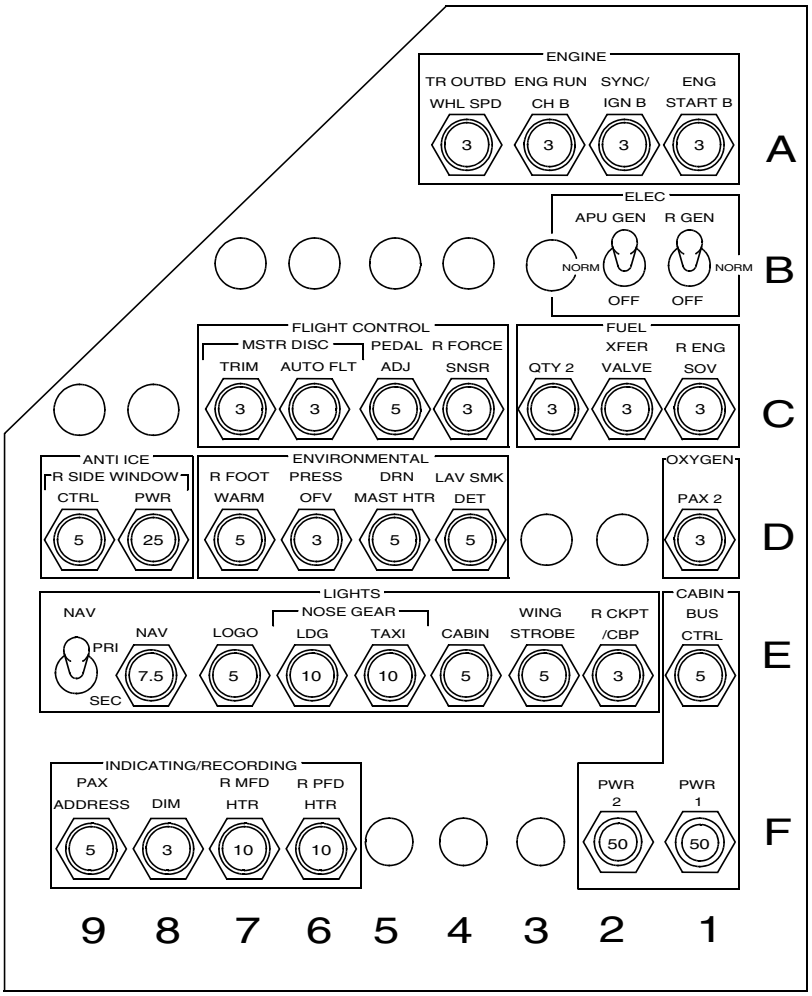

CFO0106002_003

CIRCUIT BREAKER PANELS (Cont)

CB 5 LEFT DC POWER CENTER CIRCUIT BREAKER PANEL (TYPICAL)

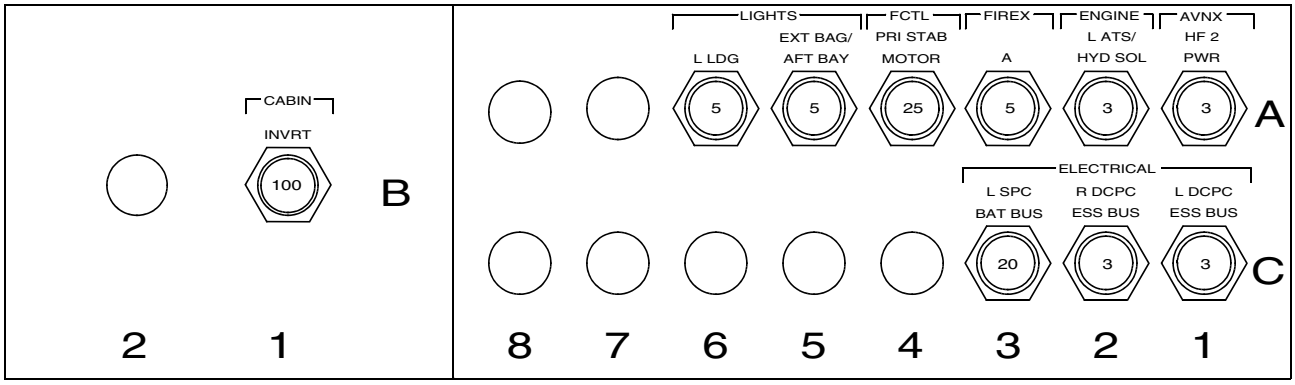

CFO0106002_002

CB 6 RIGHT DC POWER CENTER CIRCUIT BREAKER PANEL (TYPICAL)

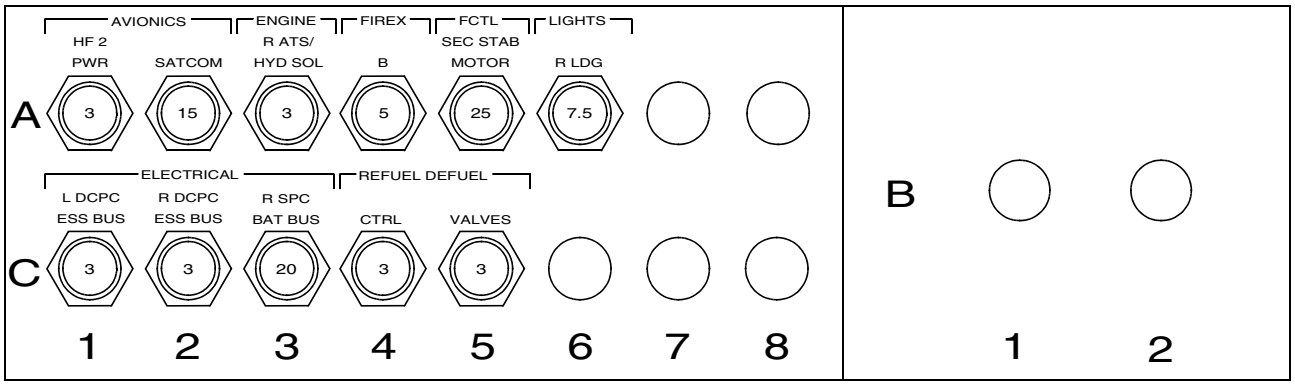

CFO0106002_001

CONTROL WHEEL

The pilot and copilot control wheels contain the following switches:

- Autopilot synchronization switch
- Checklist line advance switch
- Transponder identification switch
- Microphone key switch
- Master disconnect switch
- Pitch and roll trim switch

AUTOPILOT SYNCHRONIZATION SWITCH

The autopilot synchronization switch enables the pilot to maneuver the airplane without disconnecting the autopilot.

CHECKLIST LINE ADVANCE SWITCH

The checklist line advance switch enables the pilot to advance the electronic checklist on the MFD.

TRANSPONDER IDENTIFICATION SWITCH

The transponder switch activates the transponder IDENT function.

MICROPHONE SWITCH

The microphone switch activates the selected radio transmitter when pulled outboard and the interphone when pushed inboard.

MASTER DISCONNECT SWITCH

The master disconnect switch disengages the autopilot, and deactivates the pitch trim and stall pusher. The stall pusher is not deactivated on JAA approved aircraft. When released, the pitch trim system and pusher are immediately reactivated but the autopilot remains disengaged.

PITCH/ROLL TRIM SWITCH

The pitch and roll trim switch enables the pilot/copilot to control the trim from each control wheel.

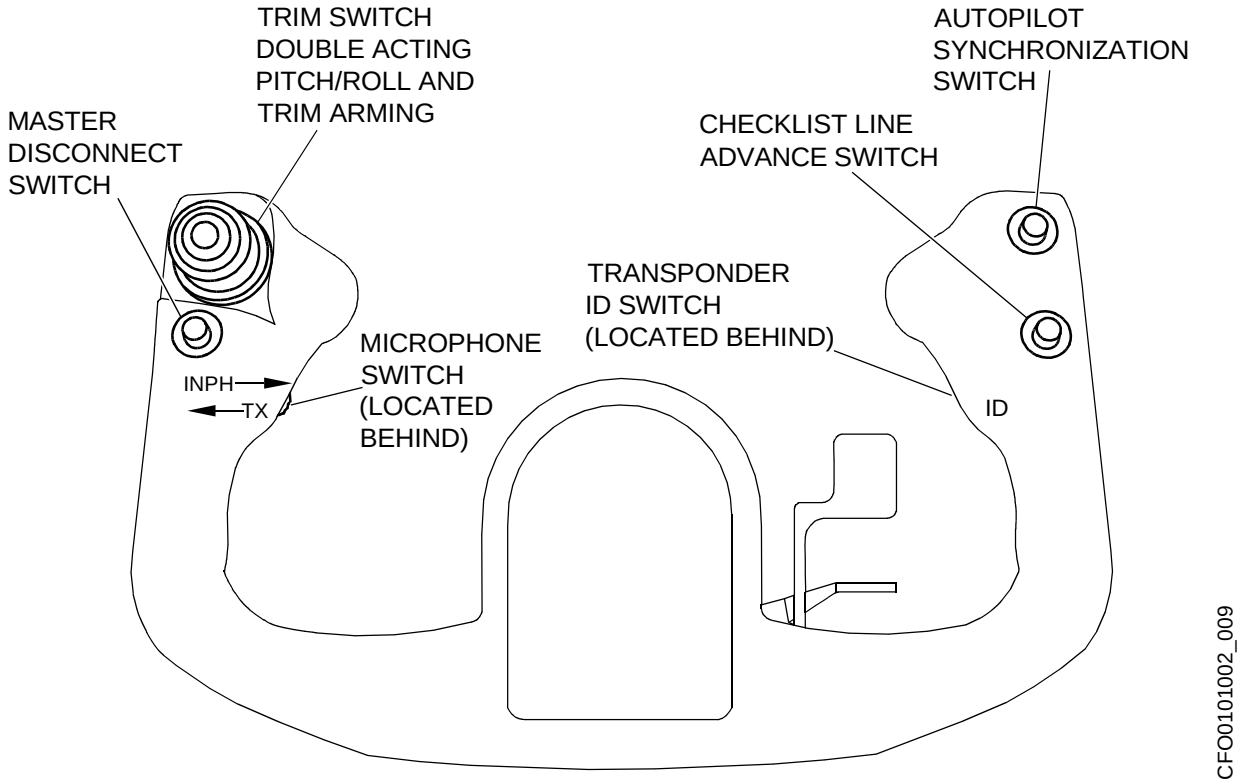

PASSENGER DOOR

DESCRIPTION

The passenger door is located on the left side of the aircraft in the forward section of the fuselage and is the primary entry and exit for the aircraft. The passenger door is attached to the fuselage by a goose-neck hinge at the centerline of the door. The door opens out and downward. When closed and locked, the door becomes an airtight plug to prevent loss of pressurization in the fuselage.

COMPONENTS AND OPERATION

The passenger door consists of an integral airstair, stairway lighting, folding handrail, actuator assembly, two telescopic support struts, door lock mechanism, inside door lever, and an outside door handle. When the passenger door is open, the top step of the integral airstair is one step below the cabin floor level.

The passenger door is normally closed electrically using an inside or outside switch. The door can be opened or closed manually.

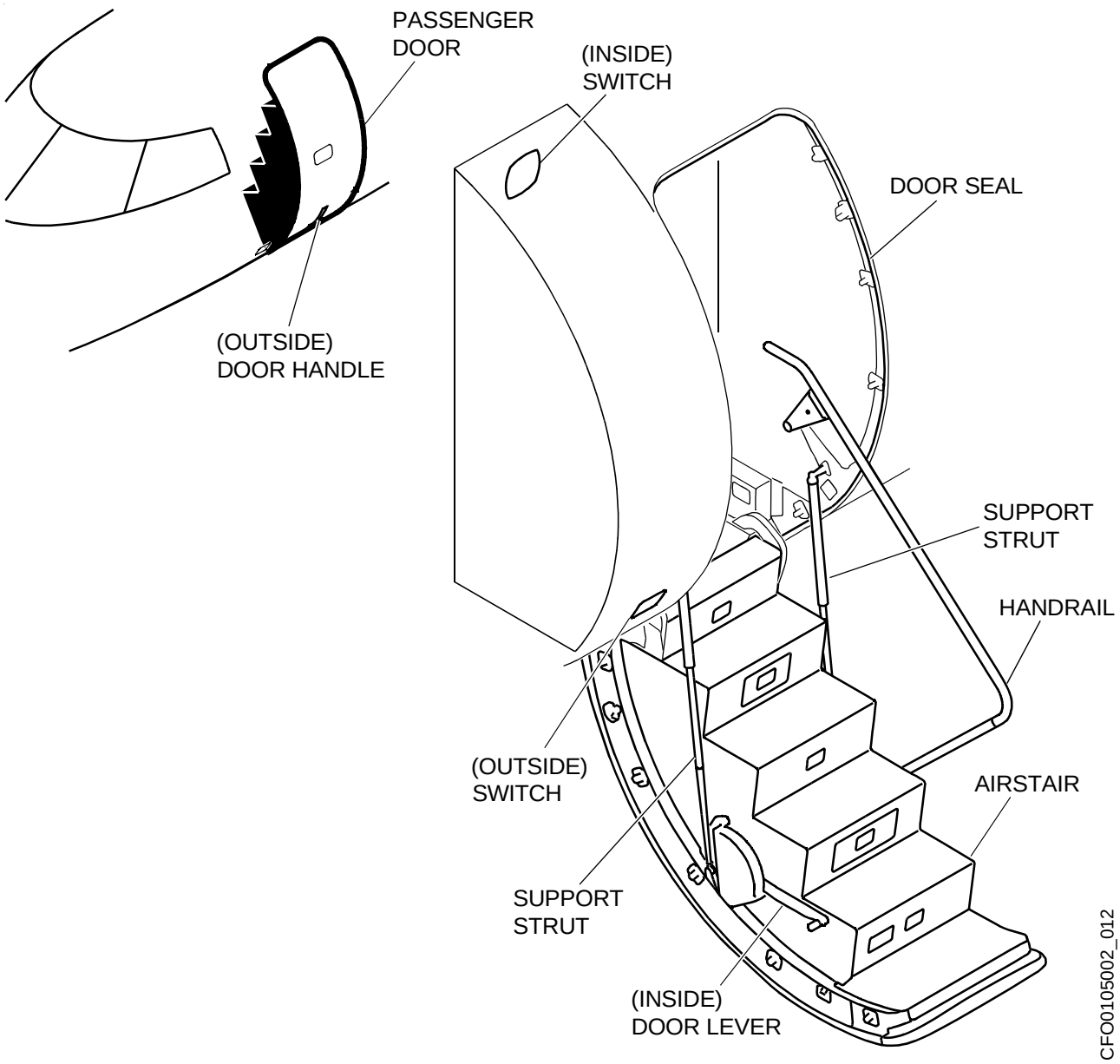

PASSENGER DOOR (Cont)

DOOR ACTUATOR ASSEMBLY

The door actuator assembly consists of an electric motor, inside and outside switch, lifting cable, pulley, and a hand-operated cable. Normal operation of the door is accomplished by the electric motor using the push button switches. In the event of loss of power to the motor, the door can be operated manually with the use of the inside lever, outside handle, and the hand-operated cable.

HANDRAIL

A two-part folding handrail is installed on the aft side of the passenger door. As the door opens, the handrail unfolds parallel to the airstair. A nylon stabilizer is mounted between the base of the handrail and the airstair to prevent unwanted movement of the handrail. As the door closes, the handrail folds at the hinge point.

DOOR SEAL

A flexible blade-type door seal constructed of silicone rubber and fabric is installed in the frame channel in the fuselage. An airtight seal is formed when the passenger door is closed and latched. The door seal prevents a rapid decrease of cabin pressure if any part of the seal becomes unserviceable. The door seal also keeps water out of the fuselage if ditching occurs.

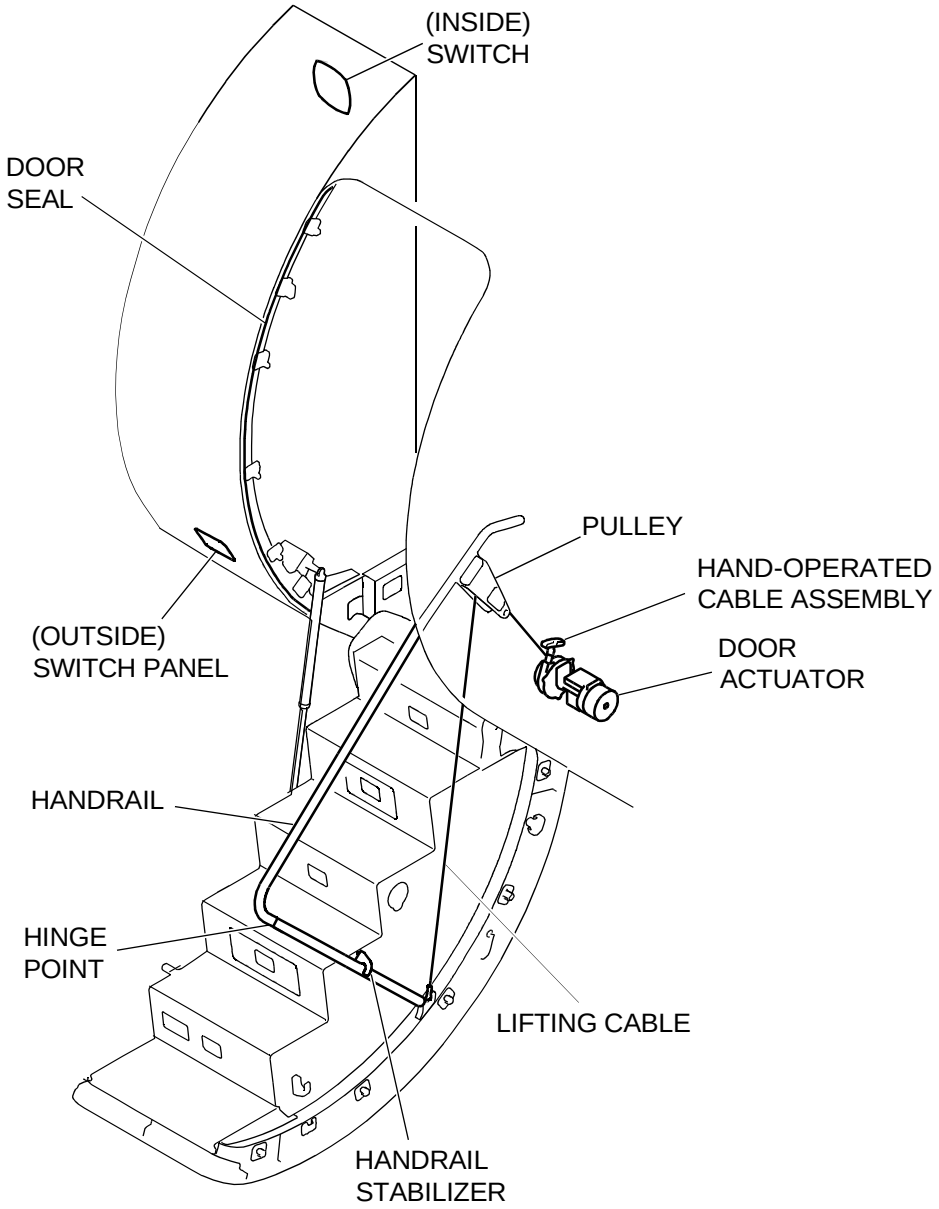

PASSENGER DOOR (Cont)

NORMAL OPERATION

To open the passenger door from the ground, use the outside handle in the center of the door. To operate the handle, push the spring-loaded finger-flap inward and pull the handle out of the recess in the door. Continue to lift the handle upwards until the handle stops, (approximately 110° travel). As the handle is lifted upwards, the vent flap in the door opens to equalize cabin pressure. At the end of the handle travel, the latch mechanism disengages the door locks allowing the door to open by gravity. As the door opens downward, the actuator assembly functions as an inertia-reel to allow the door to open slowly. To close the passenger door from the ground, open the door-switch access panel forward of the passenger door and push the switch to activate the actuator motor. The lifting cable attached to the door wraps into the actuator housing to close the passenger door. As the door closes, a vent flap in the handle closes to seal cabin pressure. Pull the external door handle downward and into the stowed position in the recess in the door. The door then can be locked with a key on the outside handle.

To open the passenger door from inside the aircraft, rotate the inside handle to the full up position, (approximately 100° travel). The door locks disengage and allow the door to open by gravity. When the door is unlocked, a red flag indicator shows through a window in the handle. To close the passenger door from inside the aircraft, push the switch located on the bulkhead forward of the door. The switch must be held in at least 7 seconds before the electrically driven motor begins to raise the door into the closed position. To lock the door, rotate the inside lever downward until it stops (approximately 100° travel). When the door is locked, a green flag indicator will show through the window in the handle.

NOTE: In order to prevent a cabin pressure bump during door closure, it is recommended that the air conditioning supply be selected OFF prior to the door being closed. Following door closure, the air conditioning supply can be reselected.

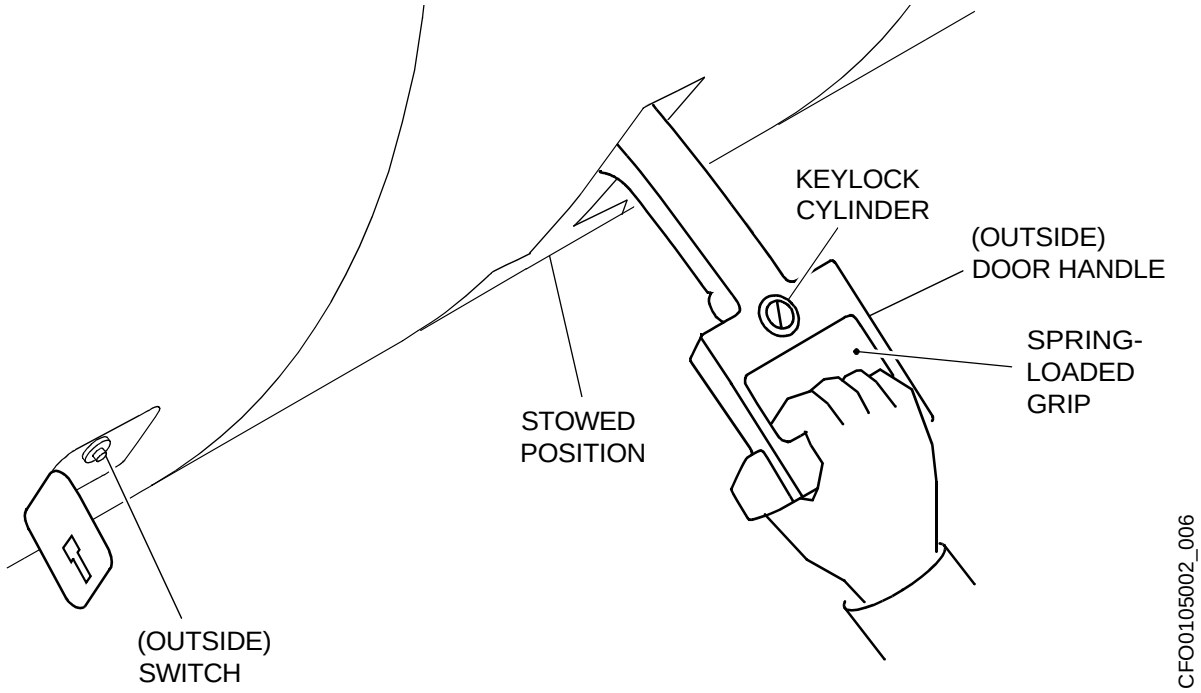

MANUAL OPERATION

In the event of loss of power to the actuator, the passenger door can be closed manually.

To close the passenger door manually from outside the aircraft, lift the door upward to the closed position. To engage the door locks, push the outer door handle into the recess in the door.

To close and lock the passenger door from inside the aircraft, raise the hinged cover located on top of the actuator housing and pull up on the T-handle. Pulling on the cable handle a number of times wraps the door lifting cable into the actuator housing and raise the passenger door into the closed position. To lock the door, rotate the inside handle downward until it stops. When the door is closed, a green flag indicator shows through the window in the handle.

PASSENGER DOOR (Cont)

DOOR LATCHING MECHANISM

The door latch mechanism consists of two cams which are part of a primary shaft installed horizontally on the door structure. The primary shaft turns with inputs from the internal handle and the external handle. The internal handle attaches directly to the primary shaft. The external handle connects to the primary shaft through control rods and a lever.

The latch mechanism has three different primary functions as follows:.

- Vent flap function
- Door lifting function
- Open lock function

VENT FLAP FUNCTION

It is not possible to open the cabin door if some cabin pressure remains. A pressure lock lever, which connects to the vent flap through a control rod and link, prevents movement of the inner handle and the vent flap stays closed. After cabin pressure is released, the springs allow the vent flap to open. The pressure lock disengages, and the door handles can then operate. The springs also insure that the vent flap opens if a part of the operating mechanism becomes unserviceable or disconnects. If one spring breaks, the other two springs can open the vent flap to release cabin pressure.

DOOR LIFTING FUNCTION

Another cam on the primary shaft of the latch mechanism causes the door to move vertically. As the cam turns, force is applied to a lever which connect to a lifting shaft installed parallel to the primary shaft. At each end of the lifting shaft is a lever which connects to the door hinge mechanism. Movement of the two levers causes the door to move vertically in relation to the hinge.

The lifting shaft has a locking ratchet cam connected to the vent flap cam which stops vertical movement of the door unless the vent flap is fully open. A pressure lock system also stops more movement of the primary cam shaft if the vent flap is kept closed by too much cabin pressure. When the pressure decreases sufficiently, the springs can open the vent flap and the locking cam moves to let the lifting shaft turn.

OPEN-LOCK FUNCTION

When the door is fully open it is not possible to close it until a system of mechanical locks is released. This lock mechanism also prevents too much vertical movement of the steps when entering and exiting the aircraft.

When the door is fully open, the primary lock engages the locking cam on the external handle pivot shaft.

PASSENGER DOOR ANNUNCIATIONS

A PASSENGER DOOR status (S) CAS message is displayed if the passenger door is not fully closed and the following conditions exist:

- The aircraft is on the ground with the left engine run switch in the OFF position
- The aircraft is on the ground, the passenger door handle is not stowed, and both engines are not running

A PASSENGER DOOR caution (C) CAS message is displayed if the passenger door is not fully closed and the following conditions exist:

- The aircraft is on the ground with the left engine run switch in the On position
- The aircraft is in flight and the passenger door rollers are not fully engaged into the fitting guides

EMERGENCY EXIT

DESCRIPTION

The emergency exit is located over the wing on the right side of the aircraft. The emergency exit is a Type III escape hatch that measures 20 inches wide by 36 inches high and weighs approximately 45 lbs. The emergency hatch is a removable plug-type hatch, held in place by a two-pin locking mechanism and by the force of cabin pressure. A security pin can be installed on the inside of the aircraft at one of the locking pins to prevent unauthorized entry from the outside. The security pin has a small flag attached which states REMOVE BEFORE FLIGHT.

NOTE: The emergency hatch can be opened and removed from inside or outside of the aircraft, but must be installed from inside the aircraft.

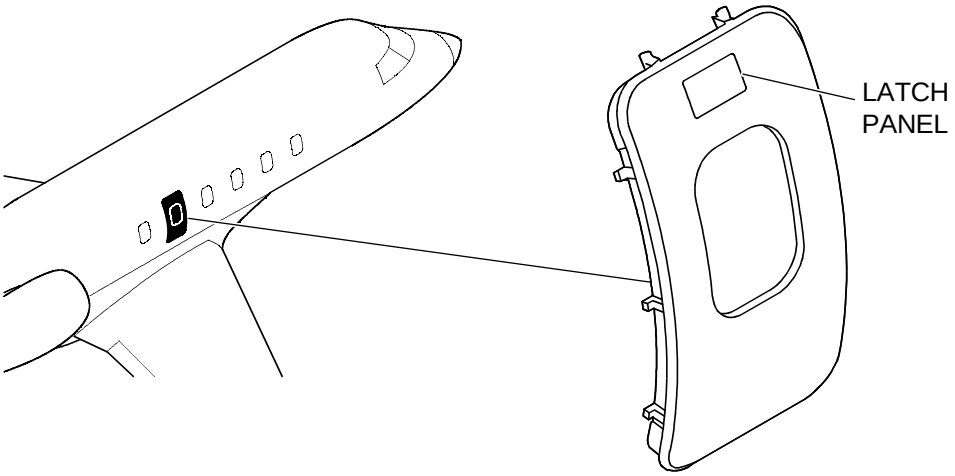

CFO0103002_001

COMPONENTS AND OPERATION

INSIDE REMOVAL

To remove the hatch from inside the aircraft, use the upper latch handle placarded EXIT-PULL. Remove the cover from the latch handle and pull the spring-loaded handle inward to retract the locking pins in the top of the hatch. Rotate the hatch downward into the aircraft, (approximately 12 inches). Using the latch handle and the handhold lift the hatch upward and away from the hinges at the bottom of the hatch. Place the hatch clear of the exit to allow passage.

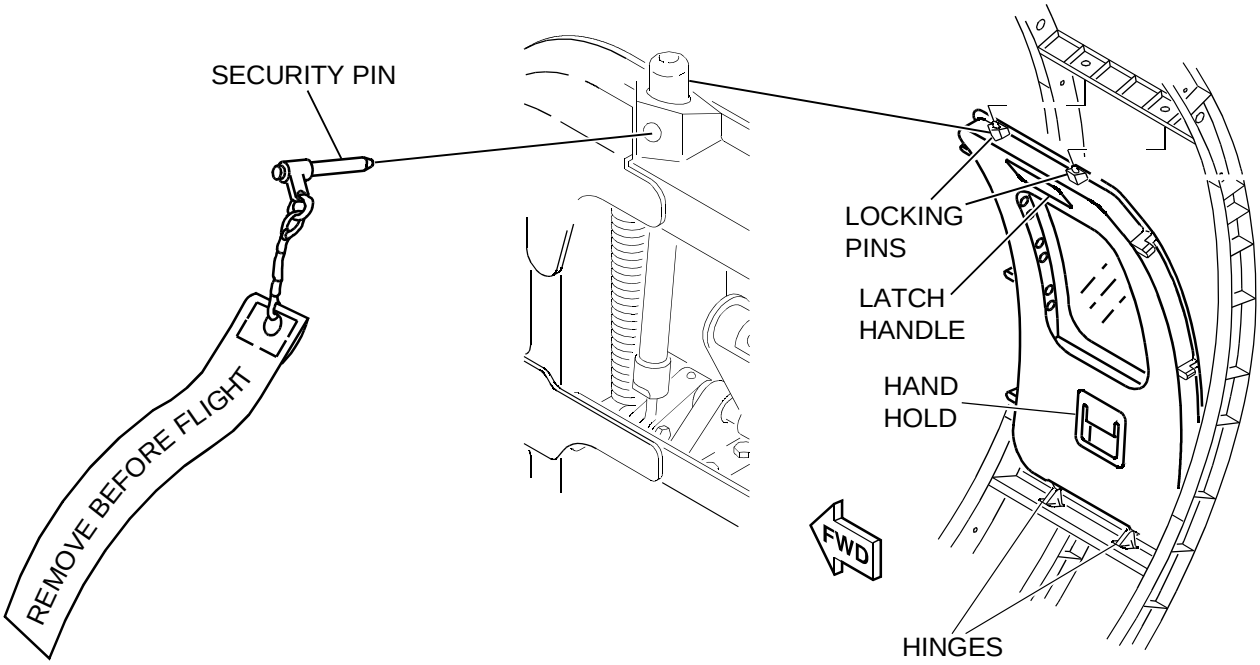

CFO0105005_001

EMERGENCY EXIT (Cont)

OUTSIDE REMOVAL

To remove the emergency hatch from outside of the aircraft, push in on the spring-loaded latch panel placarded EMERGENCY DOOR PUSH TO OPEN DOOR OPENS INWARD. While holding the panel in, push in on the hatch to rotate the top of the hatch into the aircraft (approximately 12 inches). With both hands, lift the hatch upward and away from the hinges at the bottom of the hatch. Move the hatch clear of the emergency exit to allow passage.

INSTALLATION

The emergency exit hatch must be installed from inside the aircraft. To install the emergency hatch, the passenger seat located nearest the emergency hatch must be in the full inboard position.

Install the emergency hatch into the frame in the fuselage in the opposite order of the Inside Removal procedure. Ensure that the seal around the door is seated correctly and the locking pins at the top of the hatch are fully extended into the frame. The locking pins are fully extended when the latch handle is fully retracted. Install the cover for the latch handle and secure the hook and loop fasteners for the cover.

EMERGENCY EXIT ANNUNCIATIONS

An EMERGENCY EXIT (C) CAS message is displayed if the proximity sensor detects that the emergency hatch is not completely closed and the locking pins fully engaged.

CABIN EQUIPMENT

DESCRIPTION

Although individual cabin layouts will vary, cabin interiors will have the following equipment installed:

- Passenger Service Units
- Arm Ledge
- Cabin Controlled Lighting
- Galley
- Tables
- Entertainment Center
- Lavatory

COMPONENTS AND OPERATION

PASSENGER SERVICE UNITS

Passenger service units are installed on both sides of the main cabin and incorporate the following items:

- Manually adjustable air vents for each seat position
- Drop down oxygen masks for each seat position
- Manually adjustable reading and table lights for each seat location
- Upwash and downwash LED lighting
- Cabin entertainment system speakers
- Cabin temperature sensor

ARM LEDGE

An arm ledge is installed on the left and right sides of the cabin below the window panels and incorporate the following items:

- Dual drink holder
- Bi-fold executive table
- Storage box for general storage and/or phone provisions
- Cabin handset (location depending on cabin layout)
- Switch panels for cabin lighting and entertainment system
- 115V 60 Hz electrical outlet and fax/modem port (location depending on cabin layout)
- VIP switch (location depending on cabin layout)

CABIN EQUIPMENT (Cont)

LIGHTING

A remote switch panel is located in the cockpit center pedestal to control cabin and entry lights, cabin DC and cabin AC power.

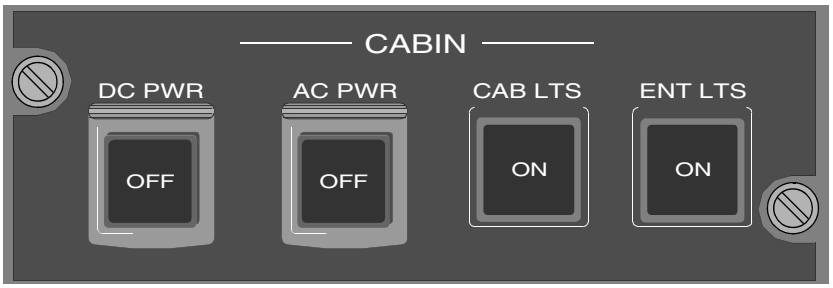

CFO0105002_014

Interior lighting consists of airstair and entry lights, crew closet and forward wardrobe lights, galley lighting, cabin upwash and downwash lighting, cabin reading and table lights, lavatory light, lavatory upwash lighting, lavatory mirror lights, baggage compartment lighting, emergency lighting, NO SMOKING, FASTEN SEAT BELT, and RETURN TO SEAT lights.

GALLEY

The galley is installed in the forward entry area of the cabin on the right side and provides facilities for stowing and preparing food and beverages. The galley contains an insulated ice compartment, two AC outlets, two hot liquid containers and cup dispensers. Lighting, liquid waste lines and ventilation is also provided. A magazine rack is installed on the aft side of the galley and also contains the subwoofer installation.

TABLE

Three bi-fold pullout retractable executive tables are provided as well as one right hand aft plug in table (near the emergency exit). A closeout conceals the table cavity when the tables are deployed.

ENTERTAINMENT CENTER

AUDIO SYSTEM — Audio is provided through the cabin speakers and/or headphones from the audio/video system. Components include eight mid/high range speakers and two subwoofer speakers. A single CD changer is operated by two remote controlled transmitters located in the left forward wardrobe cabinet above the monitor or in the forward side of the right aft partition above the monitor. A handheld remote control is also provided.

VIDEO SYSTEM — The LCD monitors are capable of displaying movies or other pre-recorded media. Components consist of a single channel DVD player and two 15 inch flat screen monitors. One is installed on the aft side of the left forward wardrobe cabinet and the other is installed on the forward side of the right aft cabin partition. Also installed is a chime/page-audio/video amplifier. An Airshow 400 or 4000 system is included as part of the entertainment center. The Airshow 4000 offers enhanced graphics, cockpit monitor, and interface to telephone or satellite systems. Refer to the applicable *Airshow Operator's Manual* for further system description.

LAVATORY

The lavatory is located in the aft cabin with the sink, mirror, storage compartment, soap dispenser, electrical outlet and ordinance signs for occupants on the left side. On the right side is an electric flushing toilet with timer and overboard servicing, storage area, tissue and trash drawer. Access to the aircraft oxygen bottle(s) is also in this area behind an upper closeout panel. Fire extinguisher storage is also provided behind the closeout panel.

The toilet switch panel is located on the left side of the right lavatory partition. The switches control the toilet flush, reading light, upwash lighting, mirror light, and a lav call that is annunciated in the cockpit and galley.

Overboard service is connected to the toilet to enable service from outside the aircraft. The connector uses a standard airline service cart. The service instruction placard is installed in the lavatory servicing compartment.

SINK PURGING

When the aircraft is to be parked outside with the OAT predicted to be less than 5 °C (41 °F) the water system should be drained to prevent damage to system components. To drain the system, the water system select switch is toggled from NORMAL to PURGE. This opens a solenoid valve allowing overboard draining of the water system. The switch is located behind the facial tissue dispenser on the upper vanity cabinet. *Refer to the Cabin Handbook for further description.*

CARGO BAY DOOR

DESCRIPTION

The cargo bay door is a plug-type door and is located forward of the left engine nacelle. The cargo door opens inward and upward to the overhead position above the doorway.

The cargo door is accessible from inside the aircraft through the passenger compartment but is not certified as an emergency exit.

COMPONENTS AND OPERATION

The cargo door assembly consists of a direct-coupled inner and outer handle, trigger-lock mechanism, fore and aft locking pin, balance springs and cables, and a roller/track assembly.

To open the door from inside the aircraft, raise the spring loaded cover on the center of the handle and push the handle towards the door pane and turn the handle clockwise. To open the cargo door from outside the aircraft, push the trigger-lock in the outer handle to release the handle from the recess in the door. Rotate the handle 90° counterclockwise to retract the locking pins and open the door inward. As the door moves inward, the rollers engage into the door tracks allowing the door to be lifted and latched in the overhead position. A balance spring/cable assembly on each side of the door takes the weight off of the door as the door is lifted into the overhead position. To latch the door externally, rotate the outer handle 90° and push the handle into the recessed housing until the trigger button is latched into the trigger mechanism. To latch the door internally, rotate the inner handle 90° counterclockwise and pull the handle until the outer handle trigger latches into the trigger mechanism and the handle is stowed into the recessed housing. Visual indication of a locked condition is the baggage door secured in position and the exterior handle stowed and locked in the handle recess.

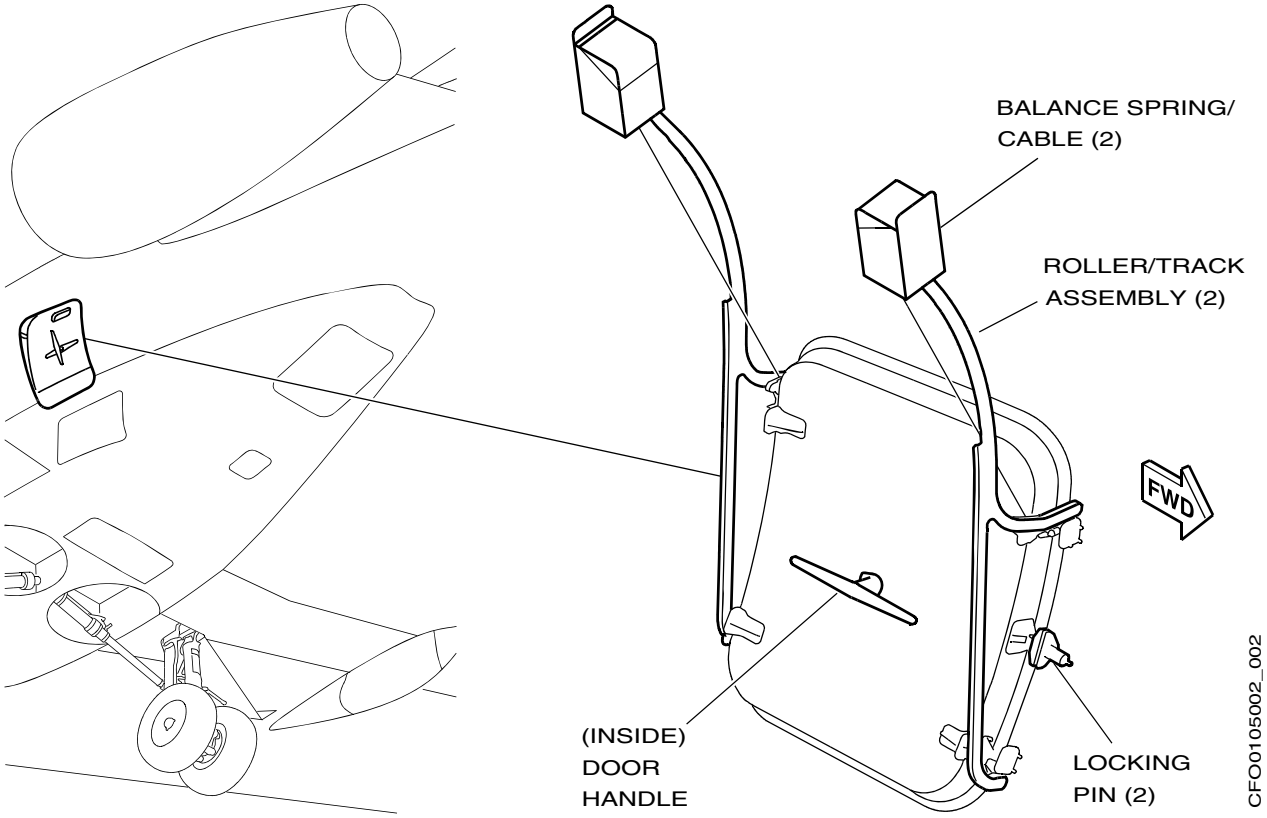

CARGO BAY DOOR ANNUNCIATIONS

A CARGO DOOR (C) CAS message is displayed if the aircraft is on the ground and the left engine run switch is selected ON. Otherwise, CARGO DOOR (S) CAS message is illuminated.

SERVICE DOORS

DESCRIPTION

The service doors allow accessibility to the various systems and components that require servicing and/or inspection.

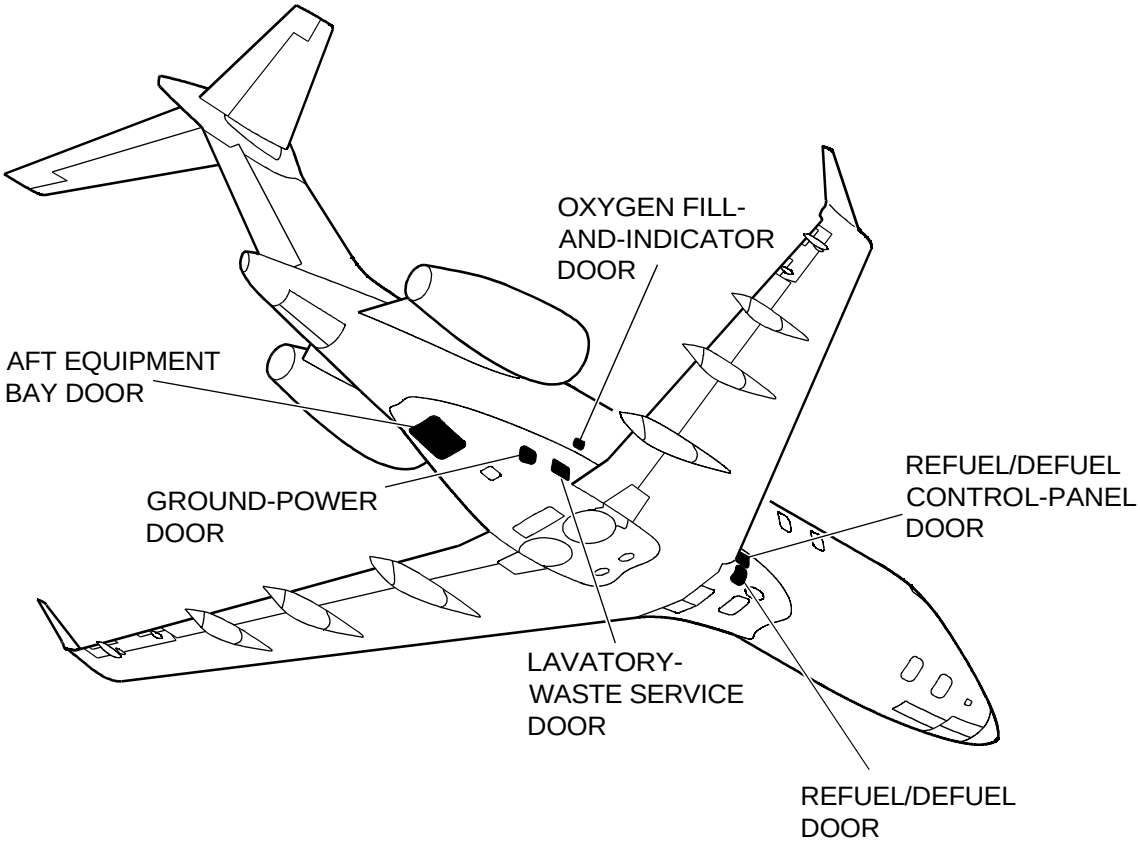

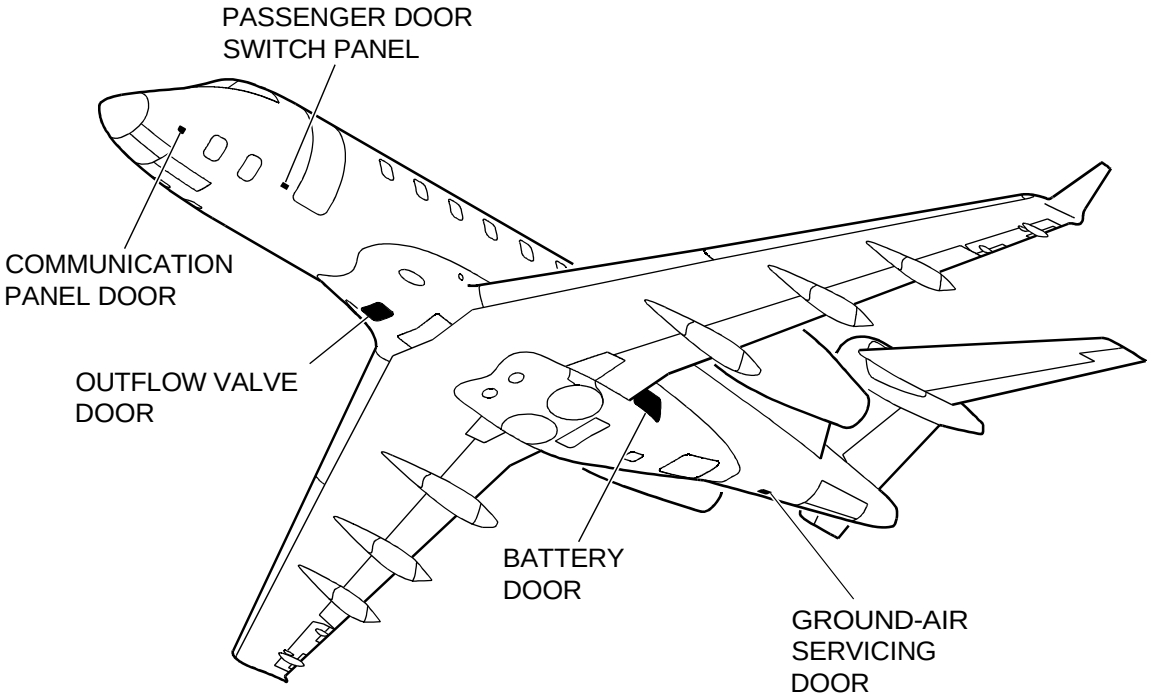

SERVICE DOORS (Cont)

COMPONENTS AND OPERATION

GROUND-POWER DOOR

The ground-power door is located on the right side of the aircraft in the aft wing-fuselage fairing, and allows access to the service panel for ground power supply.

OXYGEN FILL/INDICATOR DOOR

The oxygen fill/indicator door is located on the right side of the fuselage at the aft edge of the wing, and allows access for the oxygen indicator and servicing.

REFUEL/DEFUEL DOOR

The refuel/defuel door is located in the forward right wing-fuselage fairing, and allows access to the refuel/defuel adapter.

REFUEL/DEFUEL CONTROL PANEL DOOR

The refuel/defuel control panel door is on the right side of the aircraft in the forward wing-fuselage fairing, and allows access to the computer control panel for refueling and defueling.

LAVATORY WASTE DOOR

The lavatory waste door is located on the right side of the aircraft in the aft wing-fuselage fairing, and allows access to the lavatory-waste service panel.

COMMUNICATION PANEL DOOR

The communication door is located left of the nose wheel, and allows access to the ground communication panel.

OUTFLOW VALVE DOOR

The outflow valve door is located in the forward right wing-fuselage fairing and allows access to the outflow valve panel.

BATTERY BAY DOOR

The battery bay door is located on the left side of the aircraft in the aft wing-fuselage fairing, and allows access to the aircraft main batteries.

A proximity sensor on the battery access door prompts BATTERY BAY DOOR (C) CAS message if the door is not closed.

GROUND AIR SERVICING DOOR

The ground-air servicing door is located right of the centerline toward the rear of the fuselage, and allows access to the ground air servicing connection.

SERVICE DOORS (Cont)

AFT EQUIPMENT BAY DOOR

The aft equipment bay door is located on the centerline of the aircraft at the rear of the fuselage. The door is hinged in front and opens downward. The door has a lever-type latch mechanism. A support strut on the door can be connected to the fairing bracket to stabilize the door in the open position. The strut must be disconnected from the fairing bracket to close the door.

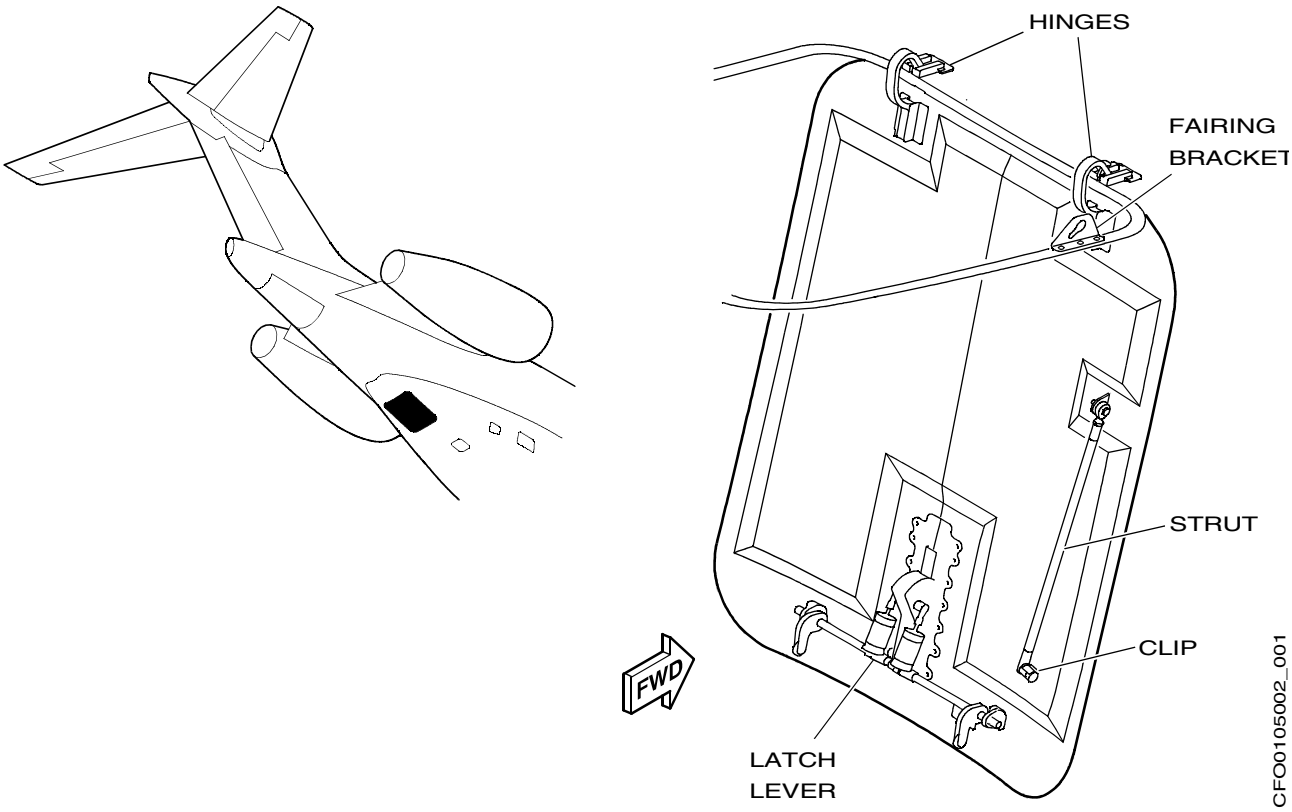

AFT EQUIPMENT BAY DOOR ANNUNCIATION

An AFT EQPT BAY DOOR (C) CAS message is displayed if the aft equipment bay door is not closed.

DOOR WARNING SYSTEM

DESCRIPTION

The door warning system monitors the position of the following doors while the aircraft is on the ground or in flight:

- Passenger door
- Emergency exit hatch
- Cargo bay door
- Aft equipment bay door
- Battery bay door

COMPONENTS AND DESCRIPTION

A magnet with an electronic proximity sensor is mounted at each door. The proximity sensors interface with the proximity sensor electronic unit (PSEU), data concentrator unit (DCU), and the multifunction display. The flight crew receives a single chime and a visual CAS annunciation if a door is not in the correct position under specific conditions. For the specific conditions, refer to the annunciation description for each door in this section.

On the ground the CAS displays EMERGENCY EXIT (C) and other door warnings in amber. However, if the left engine is set to RUN, the PASSENGER DOOR (C) and CARGO DOOR (C) will also be illuminated. In flight, the door warnings on the CAS are displayed in amber.

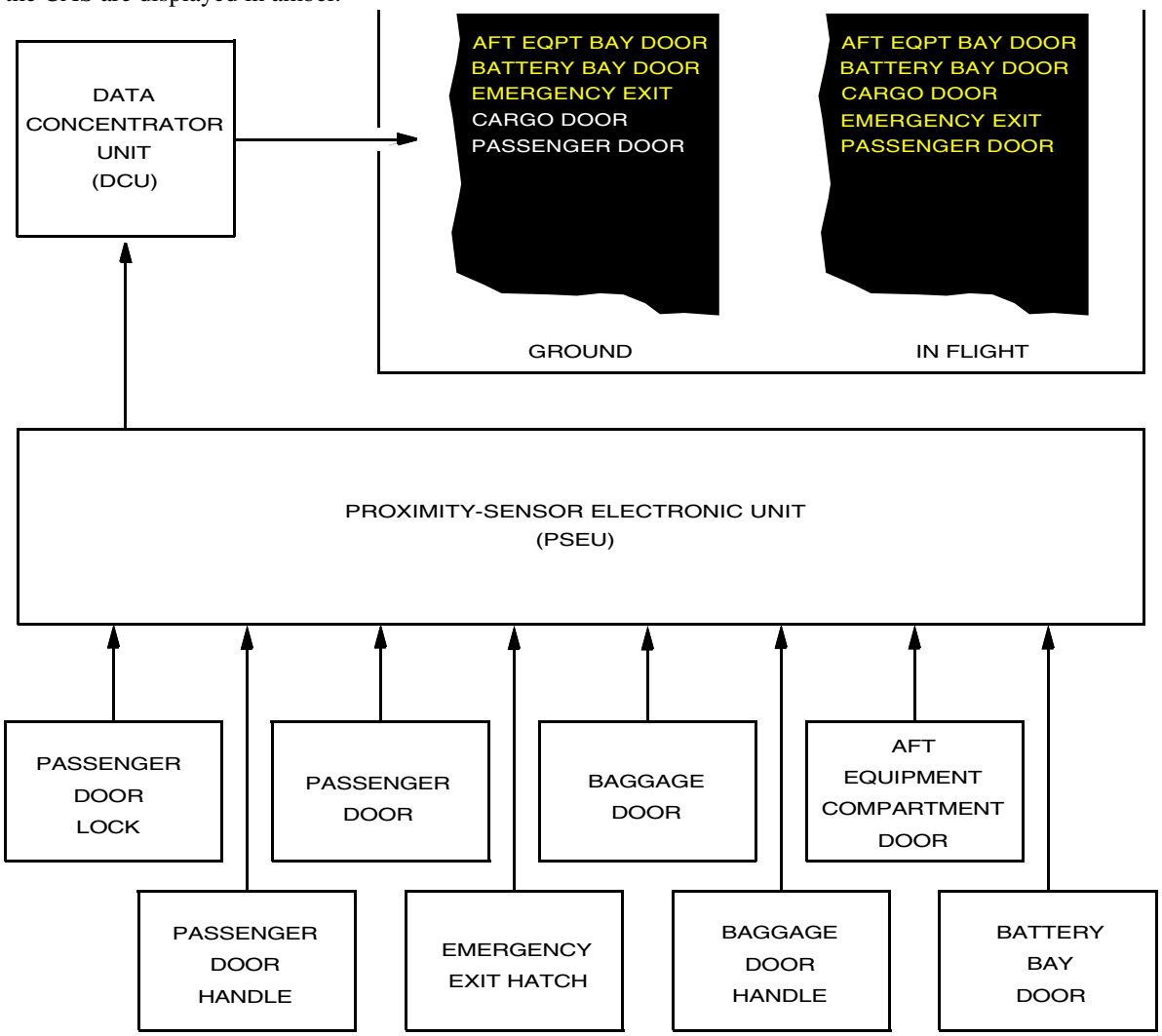

EICAS MESSAGES

The following door and exit messages are shown on the EICAS. In the table below are the messages, meanings, inhibits, and aural warnings along with a brief explanation of each message.

MESSAGE	INHIBITS	MEANING	AURAL WARNING
AFT EQPT BAY DOOR	TO/LAND	The electronic proximity sensor is indicating that the aft equipment bay door is not in the correct position when on the ground or in flight	
BATTERY BAY DOOR	TO/LAND	The electronic proximity sensor is indicating that the battery bay door is not in the correct position position when on the ground or in flight	
CARGO DOOR	TO/LAND	The electronic proximity sensor is indicating that the cargo door is not in the correct position position when the airplane is in flight	
EMERGENCY EXIT	TO/LAND	The electronic proximity sensor is indicating that the emergency exit is not in the correct position position when in flight	
PASSENGER DOOR	LAND	The electronic proximity sensor is indicating that the passenger door is not in the correct position position when in flight	
CARGO DOOR	TO/LAND	The electronic proximity sensor is indicating that the cargo door is not in the correct position position when the airplane is in on the ground	
PASSENGER DOOR	TO/LAND	The electronic proximity sensor is indicating that the passenger door is not in the correct position position when the airplane is in on the ground	

Table of Contents

Introduction 02-01-01
Bleed Air System 02-02-01
Description 02-02-01
Bleed Air Distribution 02-02-02
Description 02-02-02
Components And Operation 02-02-02
Bleed Air Manifold 02-02-03
External Ground Air Connector 02-02-03
Check Valves 02-02-03
Intermediate Pressure Valves 02-02-03
High Pressure Valves 02-02-03
APU Bleed Valve 02-02-04
Bleed Air Management 02-02-05
Integrated Air System Controller 02-02-05
Engine Bleed Air Pressure Regulation 02-02-05
APU/Engine Bleed Switching 02-02-05
Engine Start Sequence 02-02-05
APU/Engine Bleed Switching Sequence 02-02-05
APU Bleed Valve Operation 02-02-05
Bleed Air Leak Detection System 02-02-06
Description 02-02-06
Components And Operation 02-02-06
Single Loops 02-02-06
Dual-Sensing Loops 02-02-06
Bleed Air and Anti-Ice Ducts 02-02-06
Trim Air System 02-03-01
Description 02-03-01
Air Conditioning System 02-03-01
Description 02-03-01
Components And Operation 02-03-01
Integrated Air System Controller 02-03-01
Air Conditioning Pack 02-03-02
Air Conditioning Controls 02-03-03
Ram Air Inlet 02-03-04
Ram Air Valve 02-03-04
Pneumatic Sources 02-03-04
Air Distribution and Exhaust System 02-03-05
Avionics and Cockpit Display Ventilation 02-03-09
Description 02-03-09
Cabin and Cockpit Air Distribution System 02-03-10
Pressurization 02-04-01
Description 02-04-01
Components And Operation 02-04-01
Integrated Air System Controllers (IASC) 02-04-01
Outflow Valve 02-04-01
Safety Valve 02-04-01
Automatic Pressurization Modes 02-04-02
Manual Pressurization Mode 02-04-03
Pressurization Schedule — Climb and Cruise 02-04-04
Pressurization Schedule — Descent and Hold (<25 000 ft) 02-04-04

Table of Contents (Cont)

Controls and Indications 02-04-05
Pressurization Control Panel 02-04-05
Landing Sequences At Field Elevation Greater Than 7850 ft 02-04-06
Takeoff and Return to Base Sequence At Field Elevation Greater Than 7850 ft 02-04-06
Climb Mode with Selected Landing Field Elevation Greater Than 7850 ft 02-04-06
Cruise Mode with Selected Landing Field Elevation Greater Than 7850 ft 02-04-06
Takeoff From Airfield Above 7850 ft and Landing Field Elevation Above 7850 ft 02-04-07
Takeoff From Airfield Less Than 7850 ft
and Landing Field Elevation Above 7850 ft 02-04-07
Takeoff and Return to Base 02-04-08
Takeoff from Airfield Above 7850 ft
and Landing Field Elevation Less Than 7850 ft 02-04-08
ECS Synoptic Page 02-04-09
EICAS Messages 02-04-10

INTRODUCTION

The environmental control system (ECS) provides regulated conditioned air to the flight deck and passenger cabin by using an air conditioning package (PACK).

Aircraft pressurization is accomplished by regulating the overboard discharge of the conditioned air.

Ventilation is provided for the electronic equipment on the flight deck and avionics racks.

BLEED AIR SYSTEM

DESCRIPTION

High pressure (HP) bleed air is routed through high pressure valves in the ducting to the wing anti-ice system. Intermediate pressure (IP) air is routed through intermediate pressure valves to the environmental control system (ECS).

The IP ports of the engine supply a common manifold (isolated left and right by the cross bleed valve) that can also be supplied by the APU or an external ground cart. Regulating valves and check valves are installed in the aft equipment bay ducting to control bleed air from the left and right engines and APU. The IP bleed air system also includes air control switches and a leak detection system. Pressure sensors in the bleed air lines send information to the integrated air system controller (IASC) which processes the information for display on the EICAS.

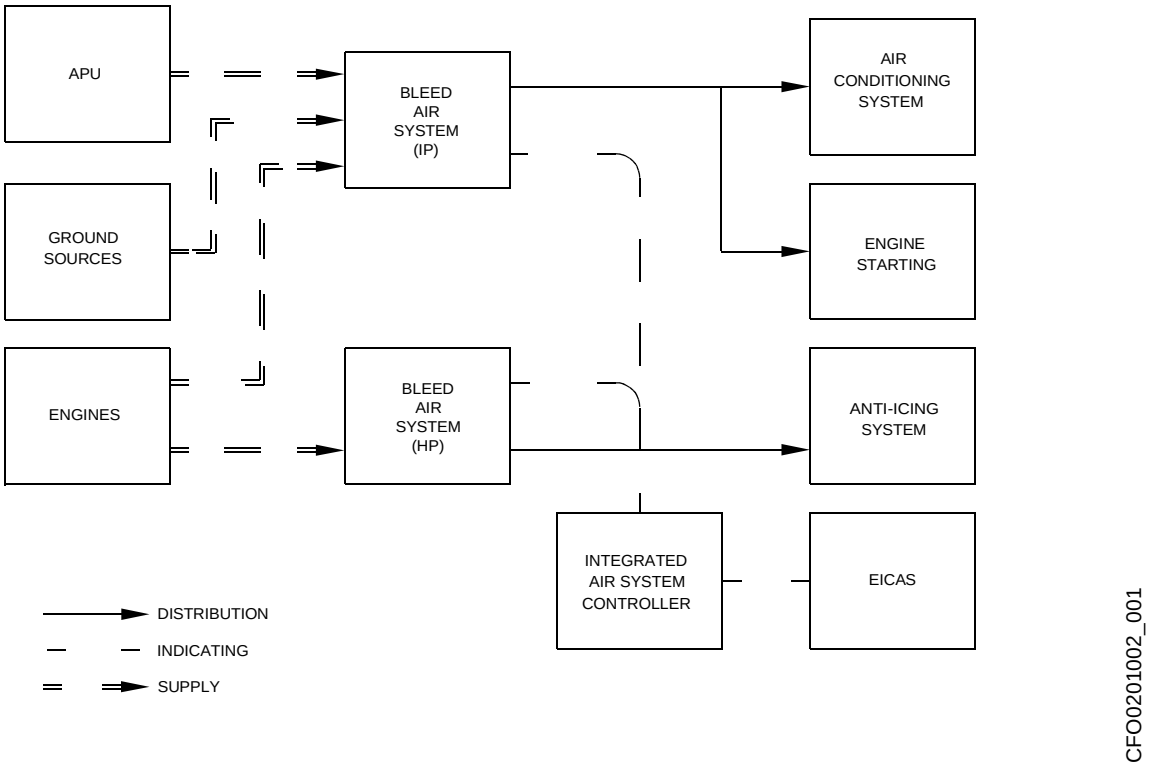

BLEED AIR DISTRIBUTION

DESCRIPTION

Air for operation of the aircraft IP bleed air system is distributed by a common manifold. Bleed air management, which consists of bleed source selection, valve operation, and air distribution, is controlled by two integrated air management system controllers (IASC).

The aircraft IP bleed air system is controlled from the AIR COND/BLEED panel. Cabin and cockpit temperatures controls range from 15 °C to 35 °C in normal mode and 10 °C to 70 °C in manual mode.

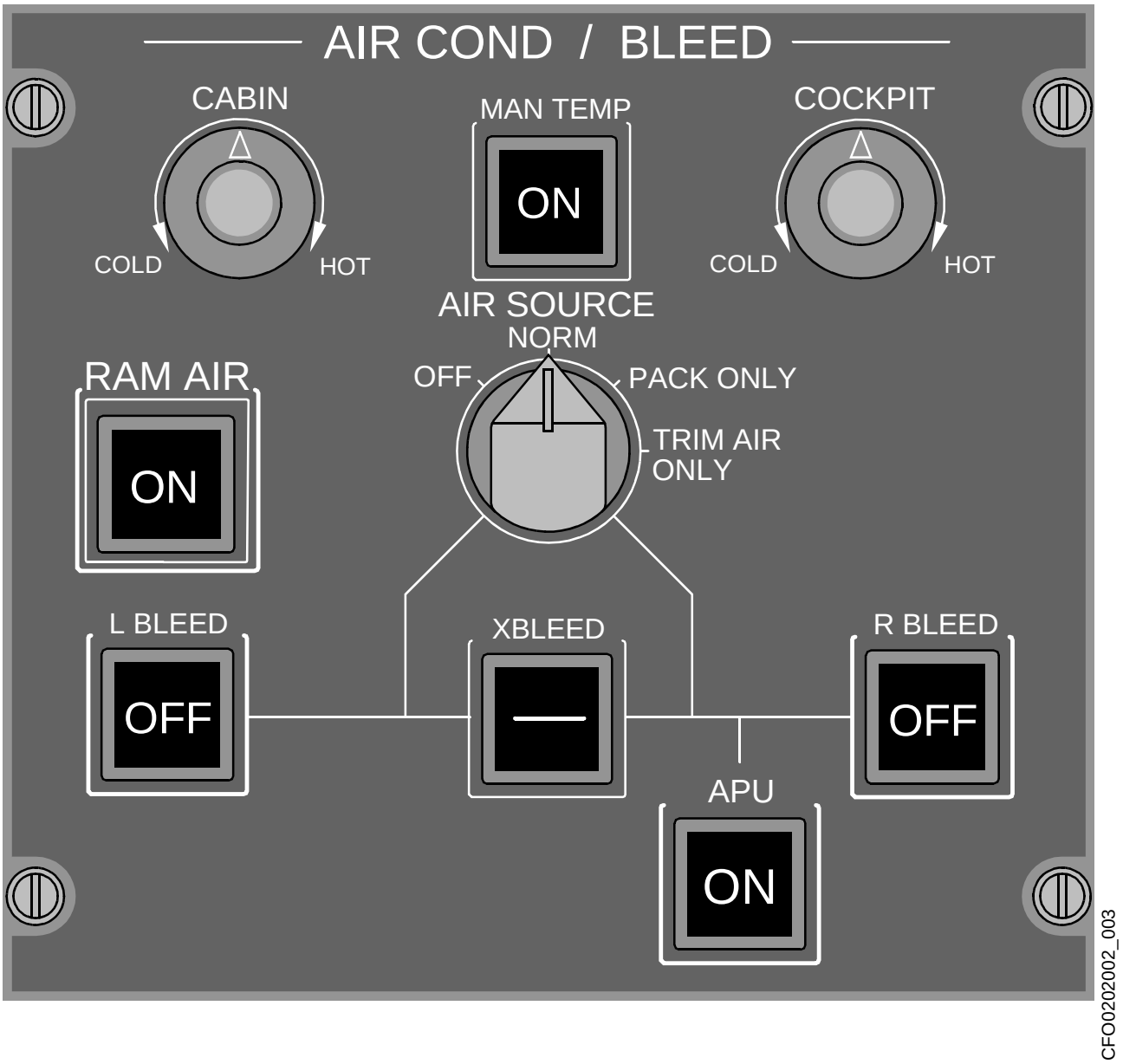

BLEED AIR DISTRIBUTION (Cont)

COMPONENTS AND OPERATION

BLEED AIR MANIFOLD

The bleed air manifold is located in the engine pylons and aft equipment bay and is divided into the right side and left side by the crossbleed (XBLEED) valve. The engines provide bleed air to their respective sides of the manifold and the APU and ground air cart provide air into the right side of the crossbleed valve.

EXTERNAL GROUND AIR CONNECTOR

An external air connector is located aft of the equipment bay door on the exterior surface of the fuselage.

The external ground air connector and duct are not depicted on the ECS synoptic displays. However, when external air is connected, the air pressure is displayed as a manifold pressure digital readout on the ECS synoptic page.

CHECK VALVES

Four check valves are installed in various locations in the bleed air ducting.

An intermediate pressure check valve is installed in each engine bleed air duct to prevent reverse flow into the engines. Check valves are installed at the external air connector and in the APU bleed air duct. The check valve at the external connector prevents the loss of air to the atmosphere. The check valve in the APU duct prevents the reverse flow of manifold air to the APU when the APU is shut down.

Check valves are not represented on the ECS or A/ICE synoptic displays.

INTERMEDIATE PRESSURE VALVES

Engine bleed air pressure increases proportionally with N_2 compressor speed. The pressure regulating function of the intermediate pressure valve limits the engine discharge pressure to 50 ± 3 psi. When N_2 compressor speed is low and the engine bleed air pressure is less than the regulated value, and at least 10 psi or greater, the valve is fully open.

The valves are pneumatically operated and electrically controlled by the L (R) BLEED switches on the air cond/bleed panel.

The bleed air valves are in a closed position when:

- Aircraft engines are shutdown
- Power is lost to valves
- Associated ENG FIRE switch is selected
- Bleed air valves are selected closed at the AIR COND/BLEED control panel.

HIGH PRESSURE VALVES

The high pressure valves regulate the engine high pressure bleed to 36 ± 3 psi. This high pressure air is then routed to the wing anti-ice system.

The valves are pneumatically operated and electrically controlled by the WING SOURCE switch and WING switch on the ANTI-ICE control panel.

The high-pressure valves are in a closed position when:

- Aircraft engines are shutdown
- Power is lost to valves
- Associated ENG FIRE switch is selected
- Bleed air valves are selected closed at the ANTI-ICE control panel via the WING switch.

BLEED AIR DISTRIBUTION (Cont)

APU BLEED VALVE

The APU bleed valve is controlled by the APU electrical control unit (ECU). The amount of bleed air taken from the APU is controlled by the ECU sensing APU exhaust temperature. The APU bleed switch on the AIR COND/BLEED control panel sends a signal to the ECU. The ECU determines when the APU is ready for bleed air loading and controls the opening, closing, and modulation of the APU bleed valve.

When the APU bleed valve is open, APU bleed air is delivered to the right side of the bleed air manifold.

When the APU is shut down or there is a loss of signal from the ECU, the APU bleed valve moves to a fail-safe closed position.

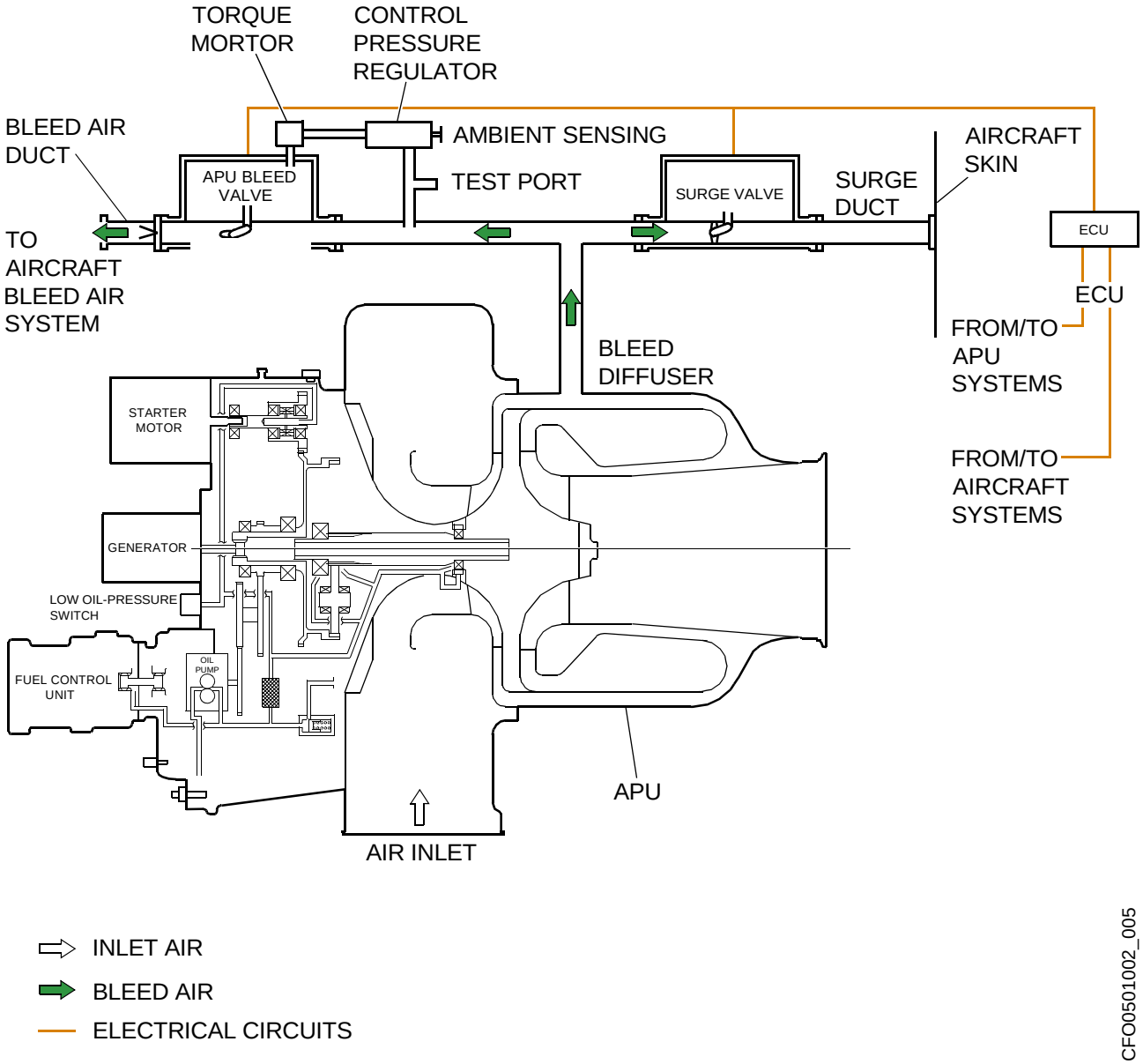

BLEED AIR MANAGEMENT

Bleed air management is primarily ensured through pilot selections on the control panel, and consists of the control and monitoring of the valves controlling bleed air source selection. Bleed air valves are controlled from the AIR COND/ BLEED control panel and include the following:

- L (R) BLEED valves
- XBLEED valve
- APU valve (via the ECU)

INTEGRATED AIR SYSTEM CONTROLLERS

The Integrated Air System Controllers (IASC)s ensure overall system control and monitoring. There are two units in the aircraft, one located under the floor, and the other under the liner of the lavatory, above the floor. The units gather air conditioning and bleed air control functions, and monitor cabin pressure and airframe ice protection functions. IASC 1 monitors the left high pressure valve and left intermediate pressure valve; IASC 2 monitors the right high pressure valve and right intermediate pressure valve.

Each IASC consists of two channels and monitors the following system operations:

- Channel A is dedicated to the Environmental Control System and Cabin Pressure Control
- Channel B is dedicated to the wing anti-icing monitoring and control and leak detection monitoring

Bleed Air for the wing anti-ice system is controlled at the ANTI-ICE control panel which is linked to the high pressure valves.

ENGINE BLEED AIR PRESSURE REGULATION

Engine air pressure increases proportionally with N_2 compressor speed. The IPV limits the intermediate engine bleed pressure to 50 ± 3 psi. If a valve fails and manifold pressure exceeds 60 psi, a L (R) BLEED FAIL (C) CAS message is displayed.

APU/ENGINE BLEED SWITCHING

All bleed switching is done manually by the aircrew.

ENGINE START SEQUENCES

During engine starts on the ground, provided a bleed source has been selected, engaging the engine start switch will automatically sequence the valves to isolate the air conditioning system and allow bleed air to flow to the air turbine starters.

When the L (R) STARTER switch is positioned to START, the following occurs:

- Cross bleed valve opens (if previously closed)
- Flow control valves close (if previously open)
- Associated start valve opens
- Engine air turbine starter (ATS) engages

When the engine achieves a self-sustaining rpm, the ATS disengages, the start valve closes, and the flow control and cross bleed valves return to the previous position. Cross-engine bleed air (from one engine to the other) can be used to power the starter. Interstage bleed air, taken from the selected engine is used for cross-engine bleed starting.

APU/ENGINE BLEED SWITCHING SEQUENCE

Takeoffs and landings are normally done with APU bleed air switch On and engine bleed air switch Off. During climb, the pilot switches the XBLEED CLOSED, L BLEED On, APU bleed Off, R BLEED On and the APU OFF.

During approach, the pilot starts the APU and switches the R BLEED switch OFF, APU BLEED ON, L BLEED switch OFF, and the XBLEED switch OPEN.

APU BLEED VALVE OPERATION

Bleed air from the APU can be used for engine starting and air conditioning. The APU electronic control unit (ECU) controls the bleed valve and energizes the bleed air supply system and supplies compressed air from the APU power section to the applicable aircraft system through the bleed air duct. The load control valve is connected to the compressor outlet of the APU. When the load control valve is open, the ECU adjusts the butterfly plate position to supply the correct quantity of bleed air. These adjustments are controlled by the required quantity of the bleed air load and the APU exhaust gas temperature.

BLEED AIR LEAK DETECTION SYSTEM

DESCRIPTION

The bleed leak detection system monitors the bleed air and anti-ice ducts for leakage. The bleed leak detection system is controlled by the integrated air system controllers (IASC) and is fully automatic.

The bleed air leak detection system is divided into eight zones for EICAS presentation:

- Left bleed duct
- Right bleed duct
- Left wing anti-ice duct
- Right wing anti-ice duct
- Right pylon duct
- Left pylon duct
- Pack ducts
- Trim air ducts

COMPONENTS AND OPERATION

SINGLE LOOPS

Single loops are used for left and right bleed ducts and trim air ducts.

DUAL-SENSING LOOPS

Dual-sensing loops are used to monitor the following:

- Bleed air ducts in the engine pylons
- Bleed air ducts in the aft equipment bay
- Anti-ice ducts in the aft equipment bay
- Anti-ice ducts in the wing leading edges.

The dual-loop system minimizes false leak indications, and allows the aircraft to be dispatched under certain conditions with one loop inoperative. A loop FAIL indicates both loops inoperative. A loop FAULT indicates one loop inoperative.

BLEED AIR AND ANTI-ICE DUCTS

The bleed air ducts are constructed of stainless steel, titanium or aluminum and wrapped with insulation. A series of vent holes in the duct covers direct escaping bleed air to the sensing loops in the event of a bleed air leak.

TRIM AIR SYSTEM

DESCRIPTION

The trim air system provides auxiliary pressurization and temperature control in the event of complete loss of the air conditioning pack. It provides hot trim air for normal cabin temperature control and cabin pressurization.

COMPONENTS AND OPERATION

The subsystem is comprised of trim air ducting, two hot air regulating shutoff valves (HARSOV), two hot air check valves (HACKV), and three trim air injectors. Most of the components are located in the aft equipment bay.

The trim air system ducts the air from the precooler outlet (trim air side) towards two lines, one feeding the cabin low pressure distribution line and one feeding the cockpit low pressure distribution line, respectively, through two trim air injectors for the cabin supply, and one trim air injector for the cockpit supply. Each of these lines is fitted with one HARSOV, which modulates the hot air flow to adjust the air supply temperature to ensure temperature control. The valves are fitted on the trim air ducts in the unpressurized aft equipment bay.

The HACKVs are used to isolate the pressurized area of the aircraft from the unpressurized rear bay of the aircraft to prevent cabin decompression in the case of a trim air supply duct failure. The HACKs are located just down stream from the trim air bulkhead.

AIR CONDITIONING SYSTEM

DESCRIPTION

The air conditioning system uses hot pressurized bleed air to create a controlled atmosphere within the aircraft. Pressurized air from either the engines, the APU, or a ground cart is used to control the temperature within the aircraft. The pressurized air is sent through an air cycle machine (PACK) which cools the air to just above freezing. This cold air is then mixed with hot trim air to provide conditioned air at the desired temperature. Two integrated air system controllers (IASC) control a series of bleed air valves, flow control valves, the air cycle machine, the trim air valves, and the ram air regulating valve. The IASCs also control the bleed leak detection, wing anti-ice and cabin pressurization functions.

Independent temperature control systems for the COCKPIT and CABIN can be controlled in both automatic and manual modes from the AIR COND/BLEED control panel located on the center pedestal.

COMPONENTS AND OPERATION

INTEGRATED AIR SYSTEM CONTROLLERS

Two integrated air system controllers (IASCs) monitor and control the air conditioning systems.

Each controller has two channels, A and B. Channel A is dedicated to air conditioning control and monitoring, avionics cooling and cabin pressurization. Channel B is dedicated to wing anti-ice control and monitoring, bleed leak detection and limited backup control of the air conditioning system. IASC 1 channel B also has a backup cabin pressure sensor.

AIR CONDITIONING SYSTEM (Cont)

AIR CONDITIONING PACK

The air conditioning pack (PACK) provides conditioned air for the fuselage compartments by decreasing the temperature and water content of the bleed air used in the conditioning process.

The PACK is supplied with pre-cooled bleed air, for cabin air conditioning and cabin pressurization.

On leaving the precooler, bleed air is ducted into the PACK, at the primary heat exchanger inlet. The primary heat exchanger is used to reduce bleed air temperature. On leaving the primary heat exchanger, the bleed air is directed into the compressor of the air cycle machine, where the temperature and pressure increases.

The air then flows through the secondary heat exchanger, where a pressure loss occurs and the temperature is reduced by exchanging heat with the ram air before flowing to the reheater/condenser.

At the condenser outlet, the condensed water is extracted by centrifugal effect in the water extractor then routed to the reheater cold air pass where air temperature increases prior to entering the air cycle machine.

The air is then expanded through the turbine of the air cycle machine to a pressure close to cabin air pressure, and subsequently, the air temperature is reduced.

From the turbine outlet, the air flows through the condenser heat exchanger where it is used as a coolant for the water separation loop.

The air temperature at the PACK discharge can be adjusted by opening or closing the temperature control valve. The temperature control valve modulates the hot air flow which by-passes the air cycle machine between the primary heat exchanger inlet and the air cycle machine turbine outlet.

The ram air is supplied upstream of the dual heat exchanger by the ram air system. It then flows through the dual heat exchanger and is collected by the plenum.

On ground static aircraft operation, the ram air flow is generated by the suction effect of the air cycle machine fan. This suction closes the plenum check valve. Whenever dynamic air is available at ram air inlet, the plenum check valve opens, and the air cycle machine fan is by-passed; the ram air is then driven by the total pressure available at ram air inlet.

Upon leaving the plenum, the air is ducted towards the dual pre-cooler heat exchanger, then ducted overboard.

FLOW CONTROL VALVES

Flow control valves (FCVs), are used to control the mass airflow through the PACK and TRIM AIR system. The flow control valves are electrically controlled, pneumatically operated, modulating shutoff valves. The AIR SOURCE selector on the AIRCOND/BLEED control panel operate the opening and closing of these valves.

The FCVs are automatically closed when the engine START switch is selected. Shutting down the air conditioning system, ensures that the air turbine starters (ATS) receive sufficient airflow for starter operation. When the start valve closes, the air source returns to the previous selection.

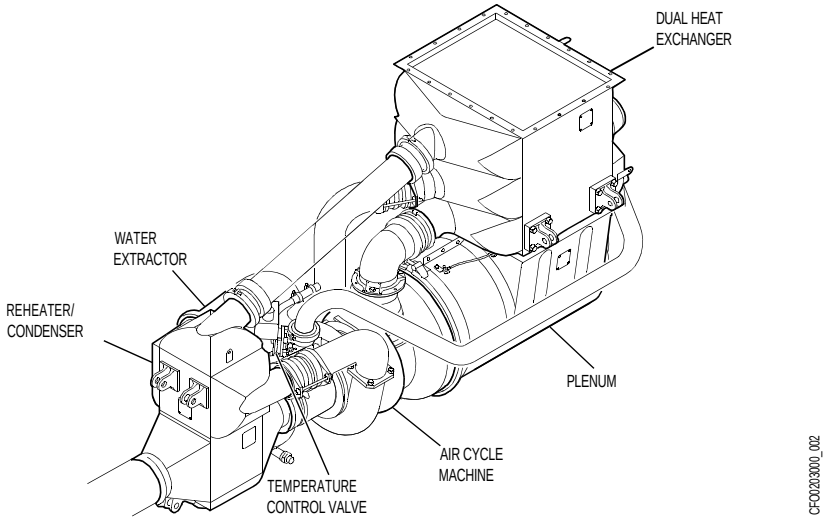

AIR CONDITIONING SYSTEM (Cont)

AIR CONDITIONING CONTROLS

Controls for the air conditioning system are located at the AIR COND/BLEED panel on the center pedestal.

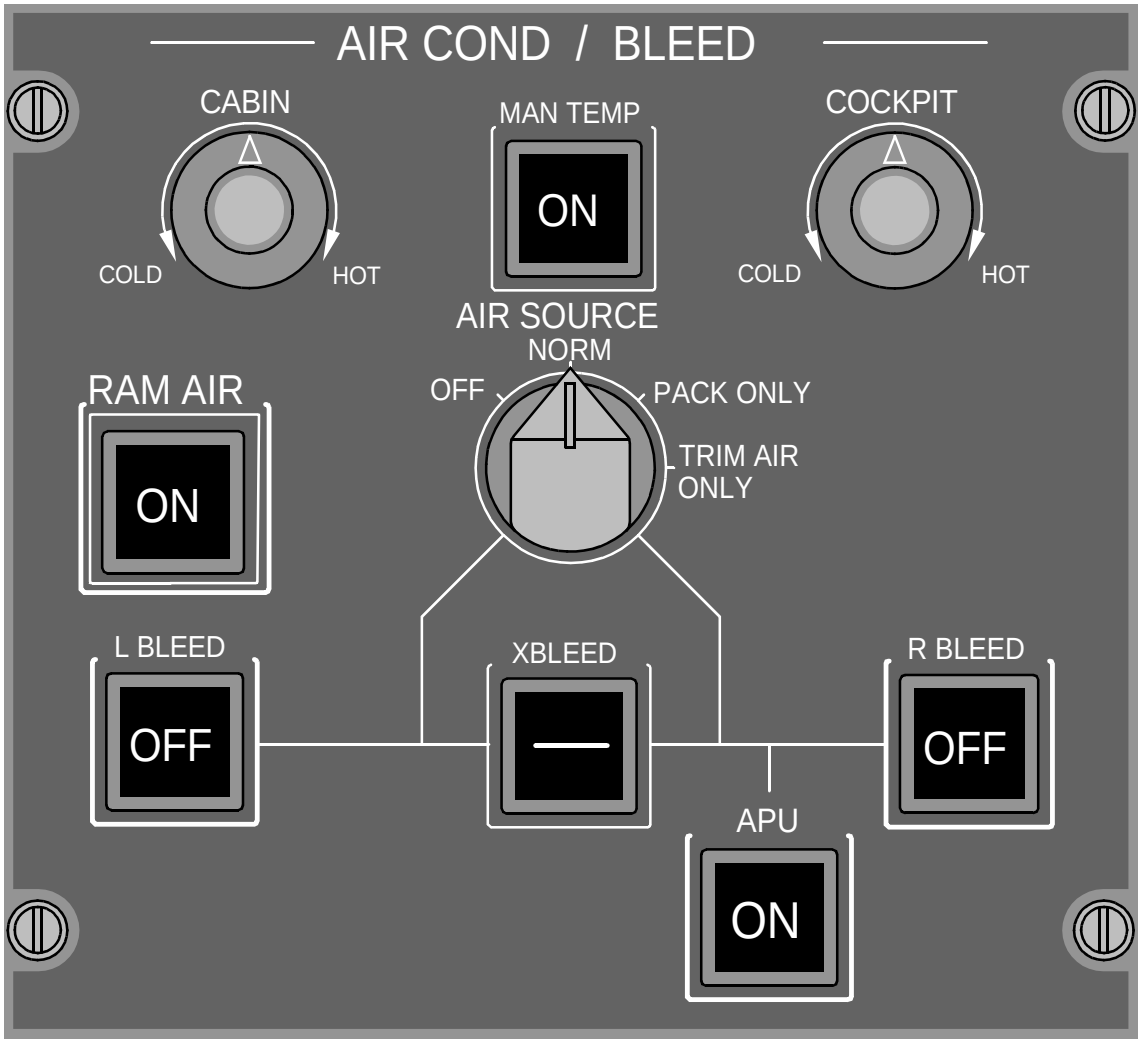

CFO0202002_003

AIR CONDITIONING SYSTEM (Cont)

Temperature selectors — Used to select desired temperature for the cockpit and cabin.

MAN TEMP — Used when automatic temperature control using cabin or cockpit ventilation sensors is not working.

AIR SOURCE selector —

- **OFF** - both flow control valves will be closed, preventing bleed air for pressurization and air conditioning from entering the cabin
- **NORM** - The normal switch position. This setting allows bleed air from the left and right sides of the manifold to flow through the PACK and the TRIM AIR valves, providing conditioned air to the cabin
- **PACK ONLY** - Opens the left flow control valve and closes the right flow control valve and precooler crossover valve (PCV), resulting in all bleed air flowing through the PACK and none through the trim air valves. This selection is used when a TRIM AIR failure exists. A PACK ONLY (S) CAS will be displayed.
- **TRIM AIR ONLY** - Opens the right flow control valve and closes the left flow control valve and (PCV), resulting in all bleed air flowing through the trim air valves and none through the PACK. This selection is used when a PACK failure exists. A TRIM AIR ONLY (S) CAS will be displayed.

RAM AIR INLET

Ram air enters the aircraft at the ram air inlet at the base of the vertical fin. Ram air is used as the cooling medium for the air-to-air heat exchangers. Ram air passes through the secondary, primary, and precooler heat exchangers where heat is extracted from the air circulated through the air conditioning system. After passing through the heat exchangers, the air is discharged overboard through the exhaust vents.

On the ground, airflow through the ram air inlet is inadequate for cooling the heat exchangers. A fan located in the ram air duct, mechanically driven by the air cycle machine, increases airflow through the duct to cool the heat exchangers.

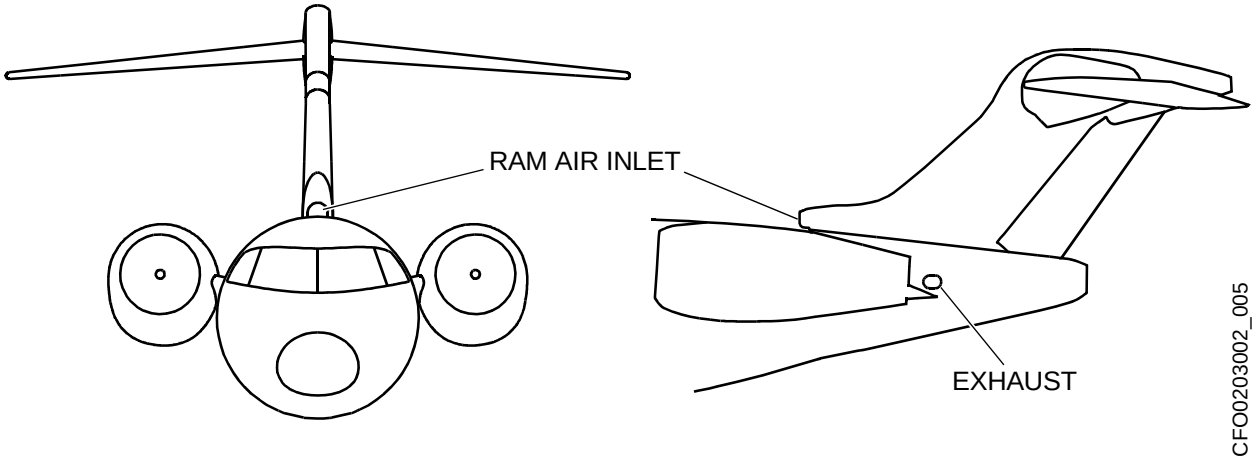

RAM AIR VALVE

If the air conditioning system fails, ram air can be used to ventilate the cockpit and cabin at low altitude. After descending below 10 000 ft, selecting the guarded RAM AIR switch to ON opens the ram air valve to provide air flow into the aircraft.

RAM AIR — Used to provide ambient air to ventilate the cockpit and cabin, in the event of PACK and TRIM AIR failure.

AIR CONDITIONING SYSTEM (Cont)

PNEUMATIC SOURCES

IN FLIGHT OPERATIONS

The engines can provide bleed air at all altitudes. The APU can provide bleed air up to 20 000 ft.

GROUND OPERATIONS

The air conditioning PACK can be operated with air from the APU, aircraft engines, or external ground cart. However, due to low pressure from the engines at ground idle, it is recommended to use the APU during ground operations.

AIR DISTRIBUTION AND EXHAUST SYSTEM

The Air Distribution and Exhaust System is used to distribute, and ensure air exhaust of conditioned air to the flight deck, cabin, and lavatory areas. The system is consists of low pressure ducting installed below and above the aircraft floor.

FLIGHT DECK DISTRIBUTION

Flight deck air distribution is ensured by a duct connected to the bulkhead check valve manifold. This duct runs under the aircraft floor, from the aft pressure bulkhead area to the cockpit. Air is then distributed by outlets at foot and leg level, on each side of the instrument panel, and a grill outlet on each side console. There are also overhead gaspers that distribute cold air only. All other outlets are temperature controlled.

PASSENGER CABIN DISTRIBUTION

Cabin air distribution is provided by two main lines connected to the bulkhead check valve manifold. These lines provide air at foot and head level. Air distribution from the overhead gaspers is cold air only. Air from provided at floor level is temperature controlled. The upper feed line runs upwards between the aircraft skin and the liner of the cargo compartment and is integral to the interior furniture located on either side of the aircraft at head level.

LAVATORY VENTILATION

A gasper supplies fresh air to the lavatory compartment.To avoid unpleasant odors in the passenger cabin, more air from the lavatory is exhausted underfloor than is supplied by the conditioned air system. A vent is installed in the lavatory wall to equalize pressure.

AIR EXHAUST AND VENTILATON PATH

After fresh air is supplied to the cabin and cockpit, it is dumped overboard through the cabin pressure control system. The air path in the cabin is designed for optimum comfort of the passengers and crew and optimum equipment ventilation management. Cabin exhaust air to the under-floor area and outflow valve is ensured through holes in the floor sill. Some of the cabin air exhaust is also directed under the floor, to ventilate and heat the battery compartment, and directly dumped overboard through the avionics valve. Cockpit exhaust air to the under-floor area and outflow valve is ensured through holes in the cockpit floor and center pedestal. Air circulation is also provided at the back of the cockpit displays through specially designed grilles.

AIR CONDITIONING SYSTEM (Cont)

COCKPIT/CABIN AIR DISTRIBUTION SCHEMATIC

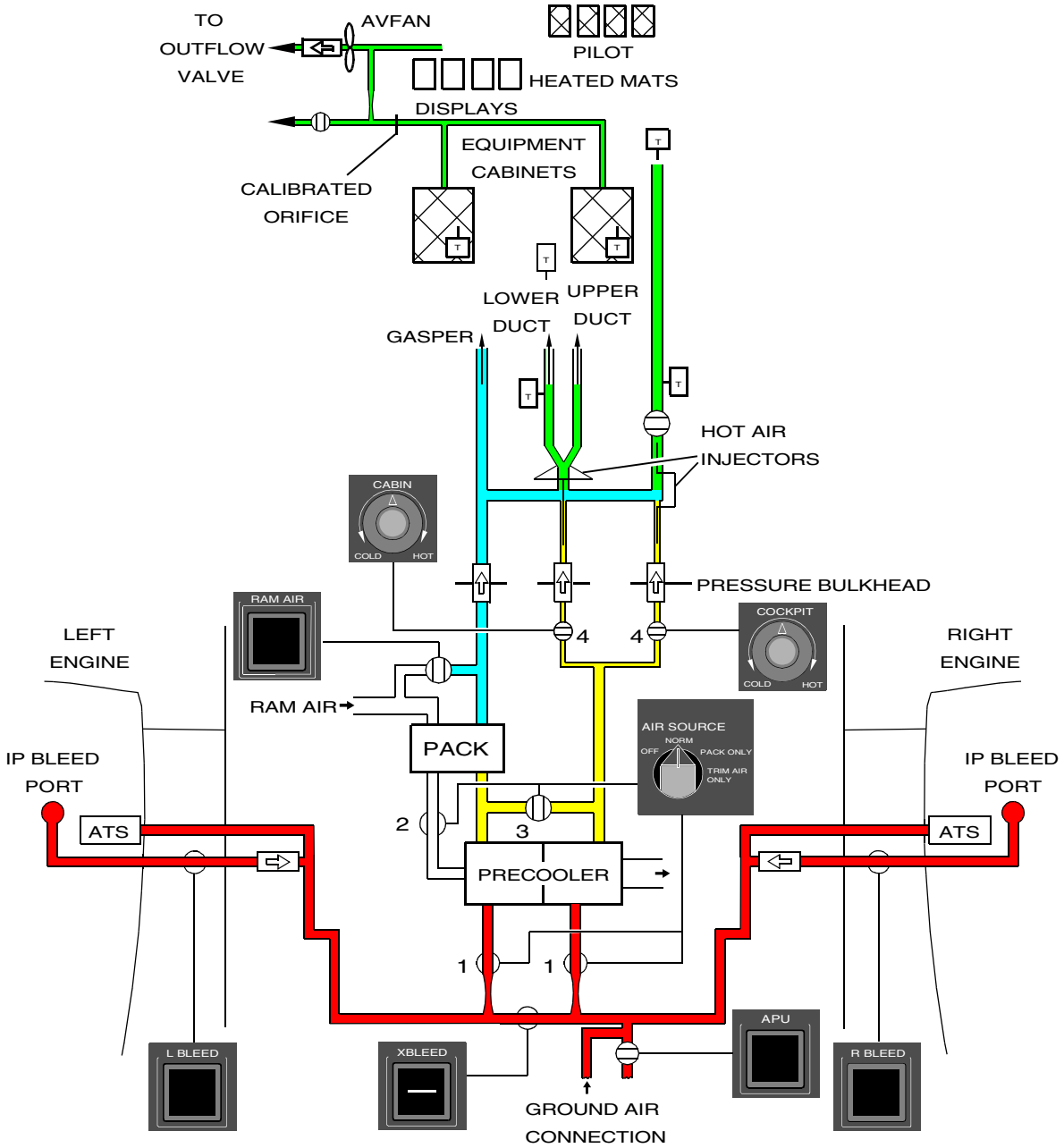

LEGEND

- Temperature Sensor
- Shutoff Valve
- Check Valve
- Intermediate Pressure Bleed Aair
- Ram Air
- Conditioned Air
- Cold Air
- Precooled Air

1- Flow Control Valves
2- Pack Valve
3- Precooler Crossover Valve
4- Trim Air Valve

CFO0203002_008

AIR CONDITIONING SYSTEM (Cont)

AIR DISTRIBUTION AND FLOW PATHS

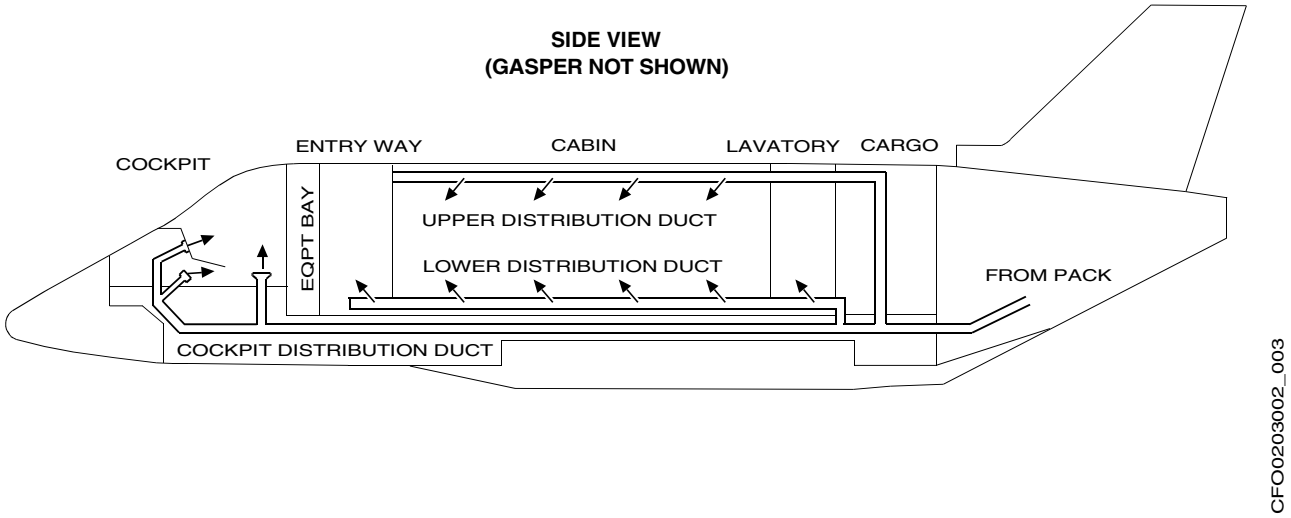

CABIN DISTRIBUTION SYSTEM

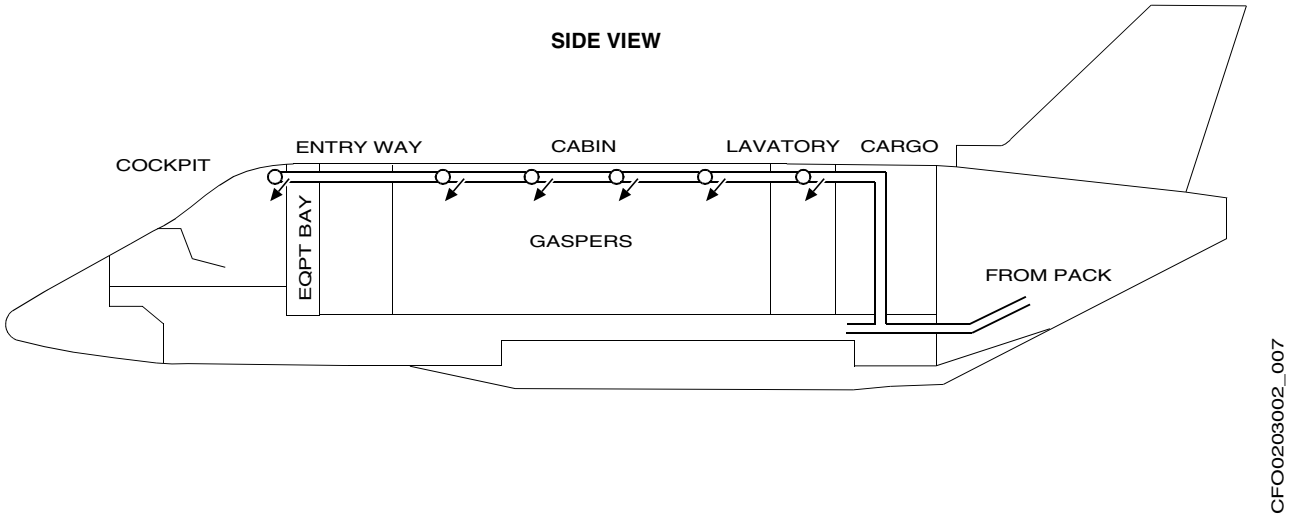

AIR CONDITIONING SYSTEM (Cont)

AIR DISTRIBUTION AND FLOW PATHS (Cont)

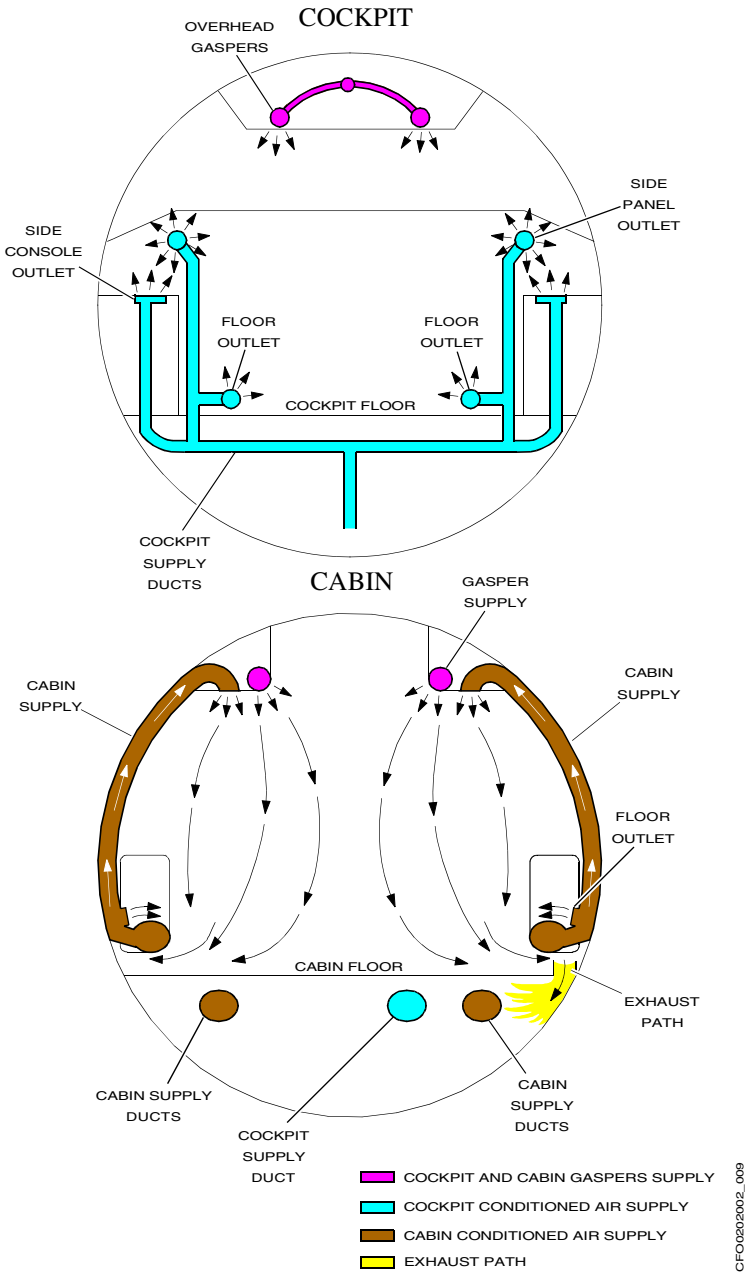

AVIONICS AND COCKPIT DISPLAYS VENTILATION

DESCRIPTION

The avionics and cockpit displays cooling system ensures the ventilation of the avionics and displays in order to comply with aircraft reliability and safety requirements.

The system consists of an underfloor fan and avionics cooling valve, either of which pulls air from the cockpit panel area behind the displays and from above the avionics racks. During ground operations, the fan is operated in high speed mode. During flight the fan is operated at low speed unless the temperature in the avionics racks reaches 122 °F (50 °C) in 60 seconds, then the fan operates at high speed. If the temperature rises above 149 °F (65 °C) during a 60 second time period while the aircraft is above 10 000 ft the fan is turned off and the avionics cooling valve is opened by the IASC. If the fan or valve fails, an EQPT RACK COOL FAULT (A) CAS message is displayed. If an overheat condition occurs in the avionics rack, an EQPT RACK TEMP HIGH (C) CAS message is displayed.

Control and monitoring is normally operated by IASC 1, in the event of failure in the system, a degraded mode, controlled by IASC 2 is activated and the avionics fan is turned on. If the fan has failed, then the avionics valve opens.

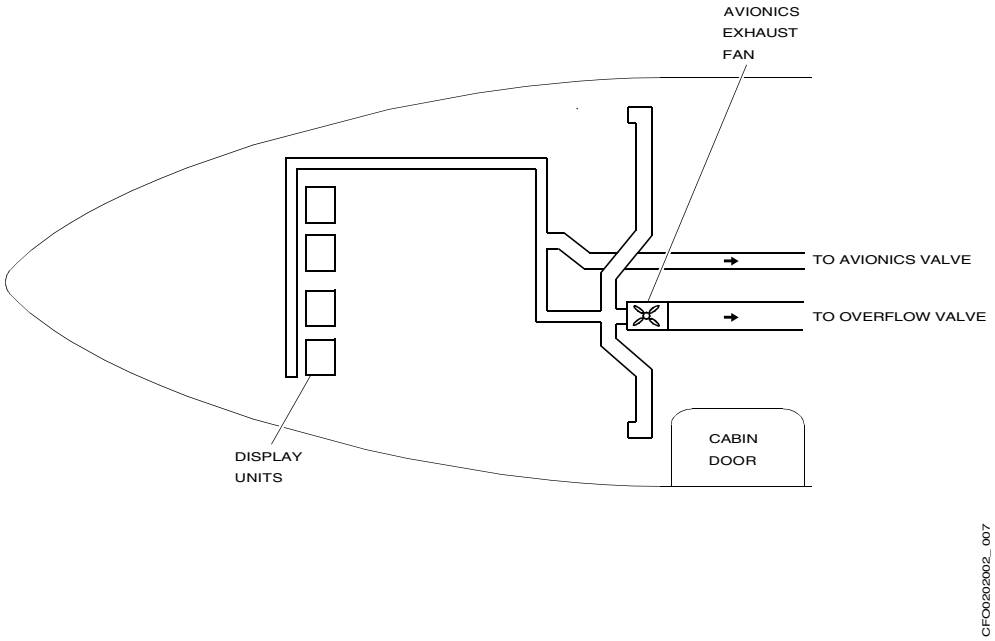

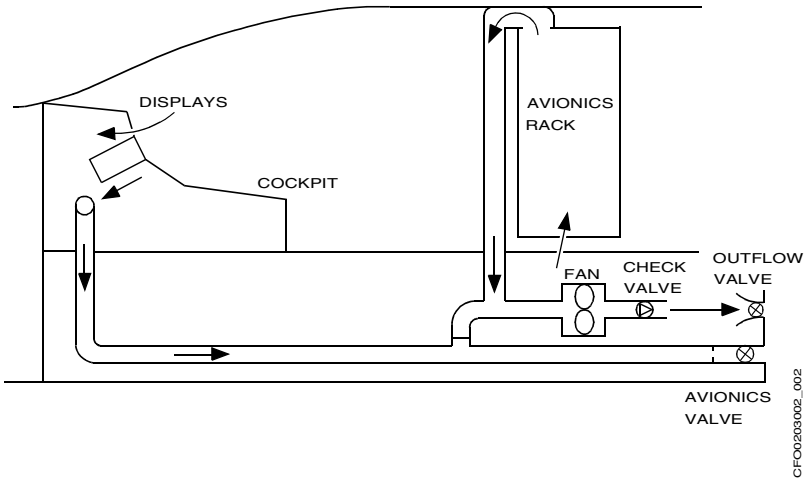

CABIN and COCKPIT AIR DISTRIBUTION SYSTEM

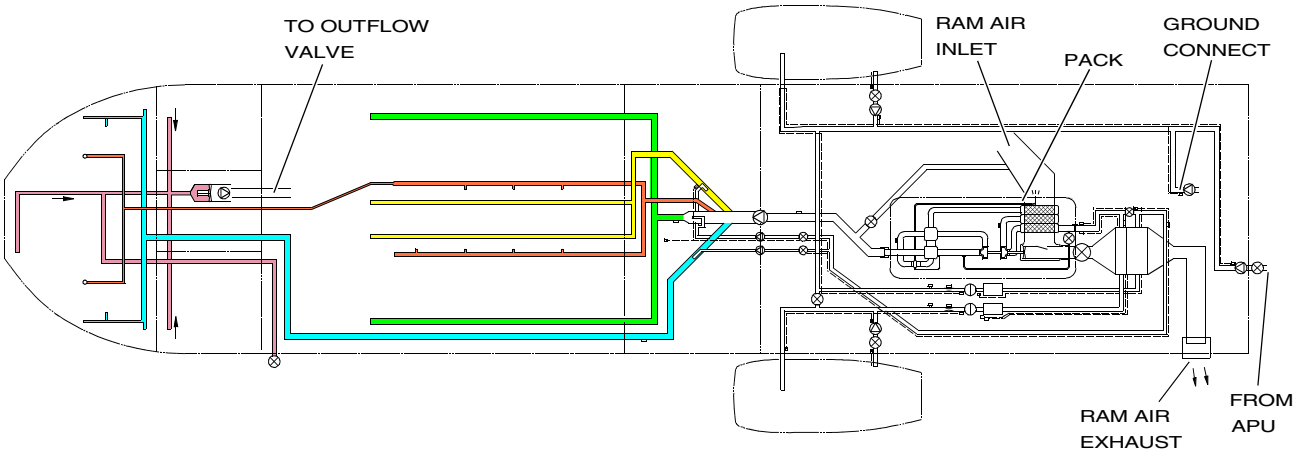

AVIONICS COOLING
COCKPIT SUPPLY
FLOOR DISTRIBUTION
TOP DISTRIBUTION
GASPERS

CFO0203002_006

PRESSURIZATION

DESCRIPTION

Cabin pressurization is achieved by controlling the leakage rate, or outflow of cabin air through an outflow valve.

The pressurization system has three independent modes of operation:

- Two automatic modes are available from two digital controllers within the Integrated Air System Controllers (IASC). Each IASC drives the outflow valve through the AUTO drive mechanism of its actuator
- One manual mode is operated from the cabin pressure control panel through IASC 1 analog circuitry which drives the out flow valve through the manual drive mechanism of its actuator

Two safety valves are pneumatically operated to prevent cabin overpressure and negative pressure conditions. The safety valves operate independently of the automatic and manual pressurization modes to provide an additional level of protection.

Normal operation of the pressurization system is automatic when the destination airport is programed into the FMS and the FMS sends the correct landing altitude to the IASC. The crew has the option of manually setting the landing altitude using the SOURCE SELECT to MAN and setting the landing altitude using the ALT switch.

Pressurization system control indications are displayed on the ECS and SUMMARY synoptic displays. CAB ALT and CAB RATE are displayed on the captain's MFD.

COMPONENTS AND OPERATION

INTEGRATED AIR SYSTEM CONTROLLERS (IASC)

Two IASCs control all automatic phases of pressurization. Only one controller is active at a time, with the other controller in standby. If the operating controller fails, the standby controller automatically takes the active role.

Unless a failure is detected in IASC 1, it becomes the active controller after power up tests are complete. IASC 2 is operated as a standby mode.

OUTFLOW VALVE

The electrical outflow valve consists of a composite flow body, butterfly plate and electrical double actuator. The actuator has two motors, one for manual operation and the other for automatic operation.

The outflow valve is located on the bottom of the fuselage. An access panel in front of the wing allows access to the outflow valve.

In the manual mode, the outflow valve is controlled electrically by the MAN RATE switch on the PRESSURIZATION control panel. From the control panel, the pilot can manually control the rate at which the cabin altitude climbs (UP) or descends (DN). To hold a particular cabin altitude, the pilot can command a zero cabin rate of climb.

SAFETY VALVE

Two safety valves located on the aft pressure bulkhead provide overpressure and negative pressure relief.

The safety valves are pneumatically operated and are spring-loaded closed. When cabin differential pressure exceeds normal limits the safety valves automatically open to relieve excess cabin pressure.

If a negative pressure condition develops (ambient pressure is greater than cabin pressure), the safety valves automatically open to equalize cabin pressure.

PRESSURIZATION (Cont)

AUTOMATIC PRESSURIZATION MODES

The following automatic pressurization modes are a function of the active IASC:

- Pre-pressurization mode
- Takeoff and return to base sequence
- Climb mode
- Cruise mode
- Descent mode
- Depressurization sequence on ground

PRE-PRESSURIZATION MODE

The pre-pressurization mode is activated on the ground when the thrust levers are advanced for takeoff. Pre-pressurizing the aircraft will allow the outflow valve to achieve a controlling position prior to takeoff to eliminate any noticeable pressure changes at takeoff. The cabin is pressurized to 300 ft below actual field elevation.

TAKEOFF AND RETURN TO BASE SEQUENCE

When the aircraft leaves the ground, the takeoff sequence is initiated. The system will maintain the pre-pressurization cabin altitude of 300 ft below field elevation until the aircraft reaches 6000 ft MSL or differential from takeoff, or 10 minutes has elapsed. If a descent is initiated the cabin altitude will descent to the takeoff altitude and the landing field elevation does not have to be reset.

CLIMB MODE

Cabin pressurization is programmed according to selected landing elevation and a theoretical schedule of cabin altitude versus aircraft altitude. The cabin climb profile varies directly with the aircraft's climb rate. A typical cabin climb rate is approximately 300-500 sea level fpm. For light aircraft climbs at the best climb rate, the maximum cabin climb rate is 635 sea level fpm (slfpm).

NOTE: When step climbs are performed at flight altitudes greater than 25 000 ft and at aircraft climb rates greater than 6000 fpm, the cabin climb rate might exceed the max normal limit of 635 sea level fpm for automatic overpressure protection. For comfortable cabin climb rates during step or zoom climb it is recommended to use a maximum aircraft climb rate of 6000 fpm.

CRUISE MODE

Cabin pressurization is programmed to activate cruise mode if the aircraft rate of climb is less than 500 sea level fpm for more than 10 seconds, or the aircraft is climbing at any rate with the aircraft altitude greater than 25 000 ft. The cabin altitude will be stabilized at a level in accordance with the pressure schedule.

DESCENT MODE

The rate of cabin descent is directly related to the aircraft's rate of descent. In the case of a high-speed descent, the rate of cabin descent is increased according to the calculation of remaining flight time. The remaining flight time is calculated from the aircraft speed received from the ADC. A typical cabin descent rate is approximately 300 sea level fpm.

For example, if the aircraft's descent rate is 2000 fpm the cabin will descend at approximately 300 sea level fpm. If the aircraft is descending at greater than 5000 fpm the cabin will descend at 750 sea level pm.

Cabin altitude will descend on schedule until the cabin altitude is approximately 300 feet below the selected landing destination elevation.

DEPRESSURIZATION SEQUENCE ON GROUND

After landing or after an aborted takeoff, the cabin will depressurize at a rate of 500 sea level feet to equalize cabin, then OFV will go to full open and remain in that configuration while on ground.

PRESSURIZATION (Cont)

MANUAL PRESSURIZATION MODE

When MANUAL is selected on the PRESSURIZATION control panel the outflow valve is manually controlled. The MAN RATE knob is used to select the desired cabin pressure altitude rate of change. An UP selection on the MAN RATE knob will cause an increase in cabin altitude. A DN selection of the MAN RATE knob will cause a decrease in cabin altitude. When the MAN RATE knob is set directly between UP and DN, cabin altitude will be maintained regardless of changes to aircraft altitude. The maximum rate of change in the MANUAL mode is 2500 fpm.

BEFORE TAKEOFF

Before takeoff, note cabin altitude and start to pre-pressurize the aircraft by adjusting the MAN RATE switch toward the DN position (it is recommended to select approximately -300 fpm, although any rate may be selected). Cabin pressure will slowly start to increase (cabin altitude will go down), due to the lack of initial delta P.

If enough time is allowed before the actual takeoff run, upon reaching 300 ft below noted cabin altitude, select cabin rate of climb to zero, and allow cabin to stabilize (CAB RATE shows as 0 FPM on the EICAS ECS synoptic page). If actual takeoff is performed prior to cabin pre-pressurization, pressure bumps may occur.

TAKEOFF AND CLIMB

Before takeoff, cabin altitude may be selected as desired. Selected altitude is displayed on the ECS synoptic summary page.

Monitor CAB ALT and CAB $\triangle$P, and make the necessary adjustments to keep the delta P within limits. Adjustments may be performed through the MAN RATE switch (+ 500 fpm to raise cabin altitude, and -300 fpm to descend cabin altitude, although any rate may be selected).

CRUISE

During cruise, cabin altitude can be selected as desired, provided applicable limits for cabin altitude and delta P are observed.

DESCENT AND LANDING

The desired cabin altitude for landing should be set to 300 ft below the field elevation. For initial descent steps, any comfortable cabin rate may be selected.

For final descent and landing, or if an unrestricted descent is intended, the cabin rate should be proportional to the aircraft descent time. For example, if the aircraft is at 27 000 ft and a 3000 fpm descent is desired, it will take approximately 9 minutes to land. To determine the rate of descent, divide the difference between the current cabin altitude and the landing altitude.

NOTE: Monitor cabin delta P during descent and approach to make the necessary adjustments to keep delta P less than 1 psid (maximum allowed for landing).

AFTER LANDING

After landing, depressurize the aircraft by adjusting the MAN RATE switch toward the UP position until field elevation is attained.

PRESSURIZATION (Cont)

PRESSURIZATION SCHEDULE — CLIMB AND CRUISE

Aircraft Altitude (ft)	Cabin Altitude (ft)	Cabin Delta P (PSID)	Aircraft Altitude (ft)	Cabin Altitude (ft)	Cabin Delta P (PSID)	Aircraft Altitude (ft)	Cabin Altitude (ft)	Cabin Delta P (PSID)
-1500	-1786	0.1	15 000	1379	5.8	33 000	4955	8.3
-1000	-1273	0.1	16 000	1504	6.0	34 000	5272	8.3
0	-245	0.1	17 000	1637	6.3	35 000	5612	8.3
1000	-135	0.6	18 000	1778	6.5	36 000	5877	8.3
1500	-81	0.8	19 000	1926	6.8	37 000	6076	8.4
2000	-26	1.0	20 000	2091	7.0	38 000	6331	8.5
3000	81	1.4	21 000	2258	7.2	39 000	6586	8.5
4000	187	1.9	22 000	2429	7.4	40 000	6827	8.5
5000	294	2.3	23 000	2608	7.6	41 000	7056	8.5
6000	399	2.7	24 000	2795	7.7	42 000	7272	8.5
7000	504	3.0	25 000	2984	7.7	43 000	7476	8.6
8000	610	3.4	26 000	3189	8.0	44 000	7669	8.7
9000	716	3.8	27 000	3404	8.2	45 000	7850	8.8
10 000	816	4.1	28 000	3628	8.3	-	-	-
11 000	925	4.4	29 000	3864	8.3	-	-	-
12 000	1036	4.8	30 000	4111	8.3	-	-	-
13 000	1150	5.1	31 000	4375	8.3	-	-	-
14 000	1268	5.4	32 000	4653	8.3	-	-	-

PRESSURIZATION SCHEDULE — DESCENT AND HOLD (<25 000 FT)

Aircraft Altitude (ft)	Cabin Altitude (ft)	Cabin Delta P (PSID)	Aircraft Altitude (ft)	Cabin Altitude (ft)	Cabin Delta P (PSID)	Aircraft Altitude (ft)	Cabin Altitude (ft)	Cabin Delta P (PSID)
-1500	-1786	0.1	15 000	1118	5.8	33 000	4699	8.5
-1000	-1291	0.1	16 000	1229	6.0	34 000	5098	8.5
0	-299	0.1	17 000	1347	6.3	35 000	5487	8.5
1000	-202	0.6	18 000	1473	6.5	36 000	5782	8.5
1500	-155	0.8	19 000	1606	6.8	37 000	6064	8.6
2000	-107	1.0	20 000	1756	7.0	38 000	6332	8.6
3000	-13	1.5	21 000	1907	7.2	39 000	6587	8.6
4000	80	1.9	22 000	2063	7.4	40 000	6828	8.6
5000	173	2.3	23 000	2226	7.6	41 000	7057	8.7
6000	264	2.7	24 000	2396	7.7	42 000	7273	8.7
7000	356	3.1	25 000	2569	7.9	43 000	7477	8.7
8000	448	3.5	26 000	2754	8.0	44 000	7670	8.8
9000	540	3.9	27 000	2948	8.2	45 000	7850	8.8
10 000	626	4.2	28 000	3151	8.3	-	-	-
11 000	721	4.6	29 000	3366	8.4	-	-	-
12 000	818	4.9	30 000	3591	8.5	-	-	-
13 000	918	5.2	31 000	3873	8.5	-	-	-
14 000	1022	5.5	32 000	4291	8.5	-	-	-

Note: For holding above 25 000 ft following descent, the pressurization schedule for Climb and Cruise applies.

CONTROLS AND INDICATIONS

PRESSURIZATION CONTROL PANEL

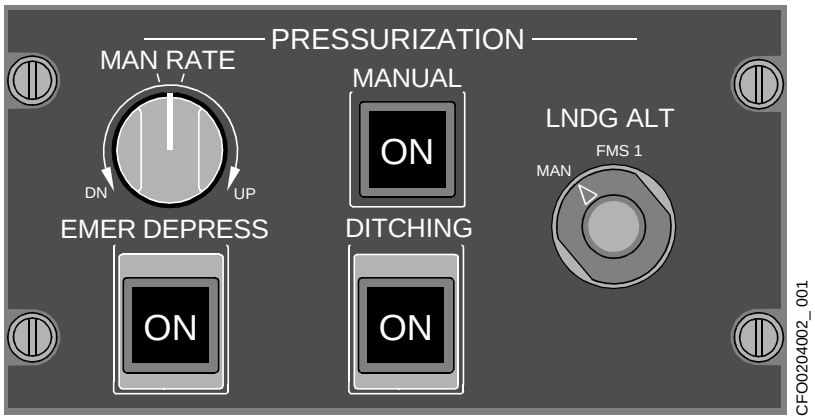

MANUAL RATE KNOB

The MAN RATE knob allows the crew to control how fast the cabin pressurization system reaches the desired cabin altitude. The switch allows adjustments to the manual pressurization rate toward DN or UP positions, as described below:

- The 12 o'clock position corresponds to 0 SLFPM
- The cabin rate of change demand from -1000 to +1000 SLFPM (sea level feet per minute) is obtained over approximately two thirds of the potentiometer angle range to allow easy selection by the aircrew
- The cabin rate of change is limited to 2500 SLFPM, which is obtained by setting the potentiometer in the full counter-clockwise position, full clockwise position, which corresponds to the max DN and UP positions, respectively.

When the desired cabin altitude is approached, rotate the switch to center position, to stabilize the cabin at the selected altitude.

MANUAL PRESSURIZATION SWITCH

Manual control of the pressurization system is initiated by pressing the MANUAL switch ON.

LNDG ALT KNOB

The LDG ALT knob is used to select landing field elevation during automatic pressurization mode. The LNDG ALT control consists of two concentric knobs. The outer knob can be selected between MAN and either FMS (for a single installation) or FMS 1 and FMS 2 (for a dual installation). Selection of one of the FMS settings will allow the pressurization landing altitude to be set from the applicable FMS destination airport database. Selection of MAN allows the inner knob to control the pressurization landing altitude

EMER DEPRESS SWITCH

The EMER DEPRESS switch is an alternate-action switch located on the PRESSURIZATION panel. A guard is installed over the switch to prevent inadvertent actuation. The switch is used to depressurize the cabin for smoke and fume evacuation. The EMER DEPRESS function is available in both automatic and manual modes. In AUTO mode, when EMER DEPRESS is selected ON, the cabin will depressurize at 2500 SLFPM up to 14 000 ft ± 100 ft or the aircraft altitude, whichever is lower. In MANUAL mode, when EMER DEPRESS is selected ON, the cabin will depressurize at 3000 SLFPM up to 14 500 ft ± 500 ft or the aircraft altitude, whichever is lower.

NOTE: In manual mode, the cabin may also be depressurized by selecting MAN RATE to max UP from the control panel.

DITCHING SWITCH

The DITCHING switch is used to depressurize the cabin, shut off the air conditioning, and then keep the OFV closed in the event of a water landing. The sequence activates automatically, and is inhibited above 15 000 ft.

NOTE: The ditching function is not available in manual mode. To close the outflow valve, turn the MAN RATE knob to max down.

CONTROLS AND INDICATIONS (Cont)

LANDING SEQUENCES AT FIELD ELEVATION GREATER THAN 7850 FT

This sequence does not require additional crew action, if the actual landing field elevation was selected prior to takeoff. The scheduled cabin pressure altitude is normally limited to 7850 ft during flight and then automatically reset to the landing field pressure altitude.

The CABIN ALTITUDE (C) CAS message is normally set for 8500 ft and the CABIN ALTITUDE (W) CAS message and aural “CABIN ALTITUDE” voice warning is set for 9400 ft. When the aircraft descends below 41 000 ft, the caution and warning thresholds start to increase as a function of the aircraft altitude and aircraft rate of descent.

The CABIN ALT WARN HIGH (A) CAS message is displayed, informing the crew that the warning and caution limits have been reset to higher than normal values.

The CABIN ALTITUDE (C) message increases up to 650 ft above landing field pressure altitude and the CABIN ALTITUDE (W) message increases up to 1550 ft above the landing field pressure altitude. Both thresholds are limited to 14 300 ft pressure altitude.

LEVELING OFF DURING DESCENT

If a leveling off occurs above 41 000 ft during descent:

- The cabin altitude remains at 7850 ft
- The CABIN ALTITUDE caution and warning remain at 8500 ft and 9400 ft respectively

If leveling off between 41 000 and 25 000:

- The cabin altitude as well as caution and warning thresholds will level also as a function of aircraft altitude
- If the leveling off lasts for more than 3 minutes, the cabin altitude will descend at a rate of -300 sea level fpm backwards towards 7850 ft. The caution and warning thresholds will also descend at a rate of -300 fpm until aircraft descent is initiated

If leveling off occurs at or below 25 000 ft during descent:

- The cabin will reach and remain at targeted landing field pressure altitude minus 300 ft
- The CABIN ALTITUDE caution and warning thresholds will reach and remain at landing field pressure altitude +650 ft and + 1550 ft respectively with both limited to 14 300 ft

If a short climb followed by a level off is performed below 25 000 ft, cabin altitude will descend at a rate of -300 sea level fpm back towards 7850 ft. A subsequent aircraft descent will automatically initiate the return to the landing field pressure altitude and decrease the caution and warning thresholds.

TAKEOFF AND RETURN TO BASE SEQUENCE AT FIELD ELEVATION GREATER THAN 7850 FT

Similar to the takeoff at lower field elevations, as the aircraft leaves the ground, the takeoff sequence is initiated. The system will maintain the pre pressurization cabin altitude of 300 ft below takeoff pressure altitude until the aircraft reaches 6000 ft AGL or 10 minutes has elapsed. If a return to base is initiated the aircraft will land slightly pressurized at the pre pressurization value to avoid cabin bumps and the landing field elevation does not have to be reset. During this sequence, the caution and warning thresholds will be maintained at the takeoff pressure altitude.

CLIMB MODE WITH SELECTED LANDING FIELD ELEVATION GREATER THAN 7850 FT

When the aircraft is in climb following a takeoff from an airfield above 7850 ft, the cabin altitude will decrease at a rate of -500 sea level fpm towards the maximum normal limit of 7850 ft. The caution and warning thresholds decrease as a function of the aircraft altitude and the aircraft rate of climb, but at a minimum rate of -500 sea level fpm in order for the caution threshold to reach 8500 ft and the warning threshold to reach 9400 ft before the aircraft reaches 41 000 ft.

CRUISE MODE WITH SELECTED LANDING FIELD ELEVATION GREATER THAN 7850 FT

When the aircraft is in cruise following a takeoff and climb from an airfield above 7850 ft, the cabin altitude will continue to decrease at a rate of -300 sea level fpm until the maximum normal cabin altitude limit for 7850 is reached.

The warning and caution thresholds will continue to decrease at a rate of -300 fpm until the caution threshold of 8500 ft and the warning threshold reaches 9400 ft.

CONTROLS AND INDICATIONS (Cont)

TAKEOFF FROM AIRFIELD ABOVE 7850 FT AND LANDING FIELD ELEVATION ABOVE 7850 FT

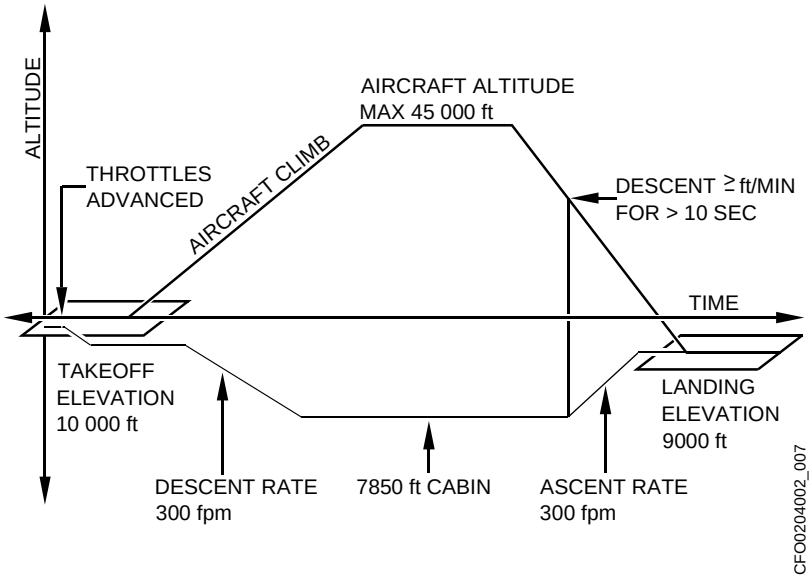

TAKEOFF FROM AIRFIELD LESS THAN 7850 FT AND LANDING FIELD ELEVATION ABOVE 7850 FT

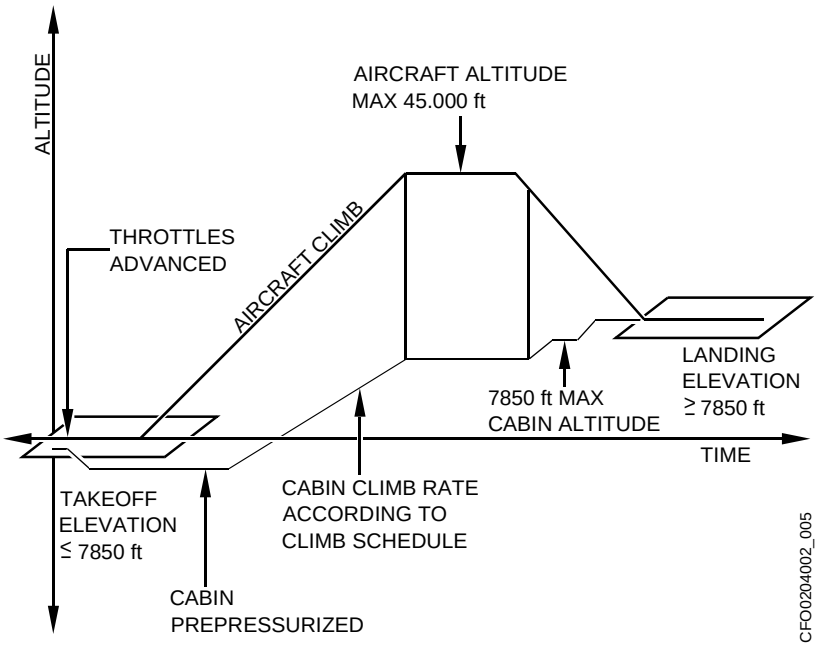

CONTROLS AND INDICATIONS (Cont)

TAKEOFF AND RETURN TO BASE

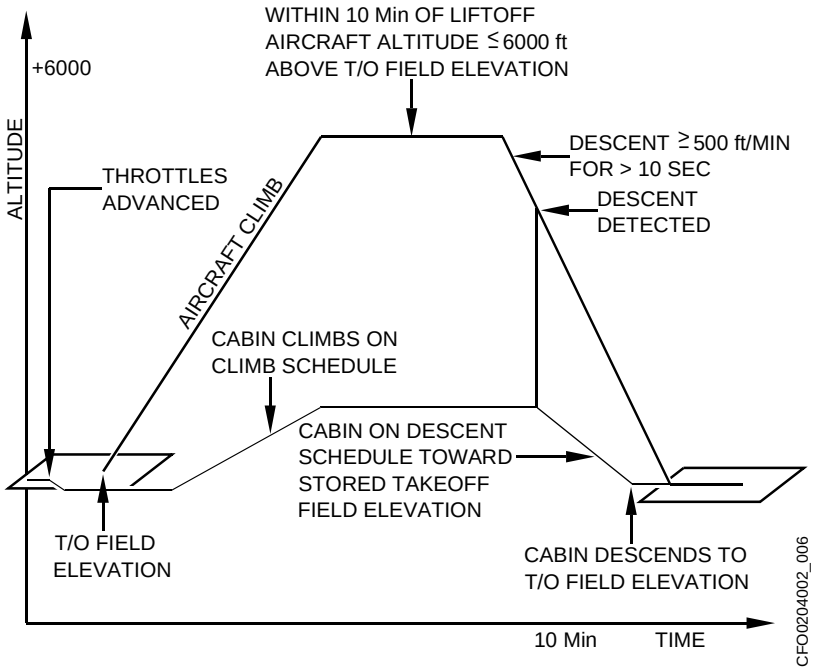

TAKEOFF FROM AIRFIELD ABOVE 7850 FT AND LANDING FIELD ELEVATION LESS THAN 7850 FT

During climb and cruise mode, the target for the cabin altitude will be the normal cabin pressure schedule which is below the maximum normal limit of 7850 ft for aircraft altitudes below 45 000 ft. The warning and caution thresholds will decrease until the caution threshold reaches 8500 ft and the warning threshold reaches 9400 ft

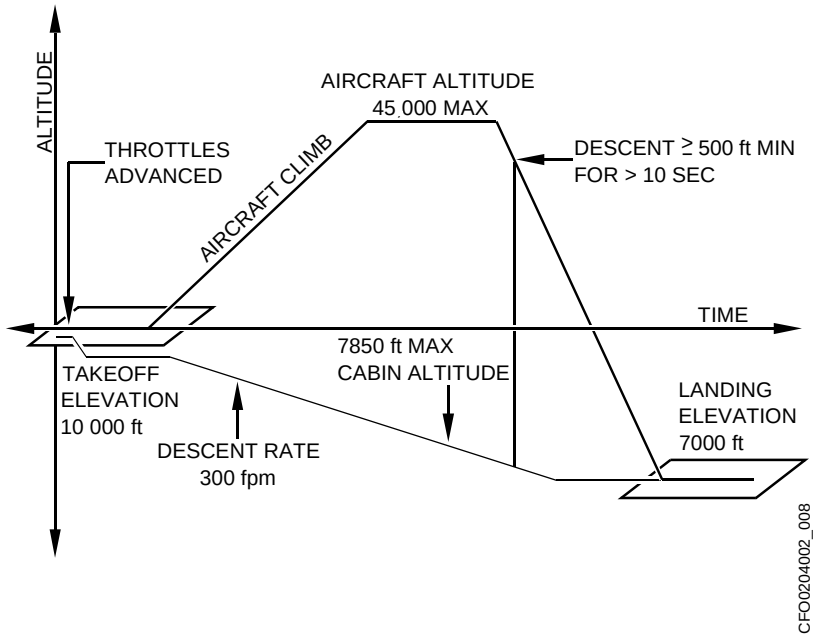

CONTROLS AND INDICATIONS (Cont)

ECS SYNOPTIC PAGE

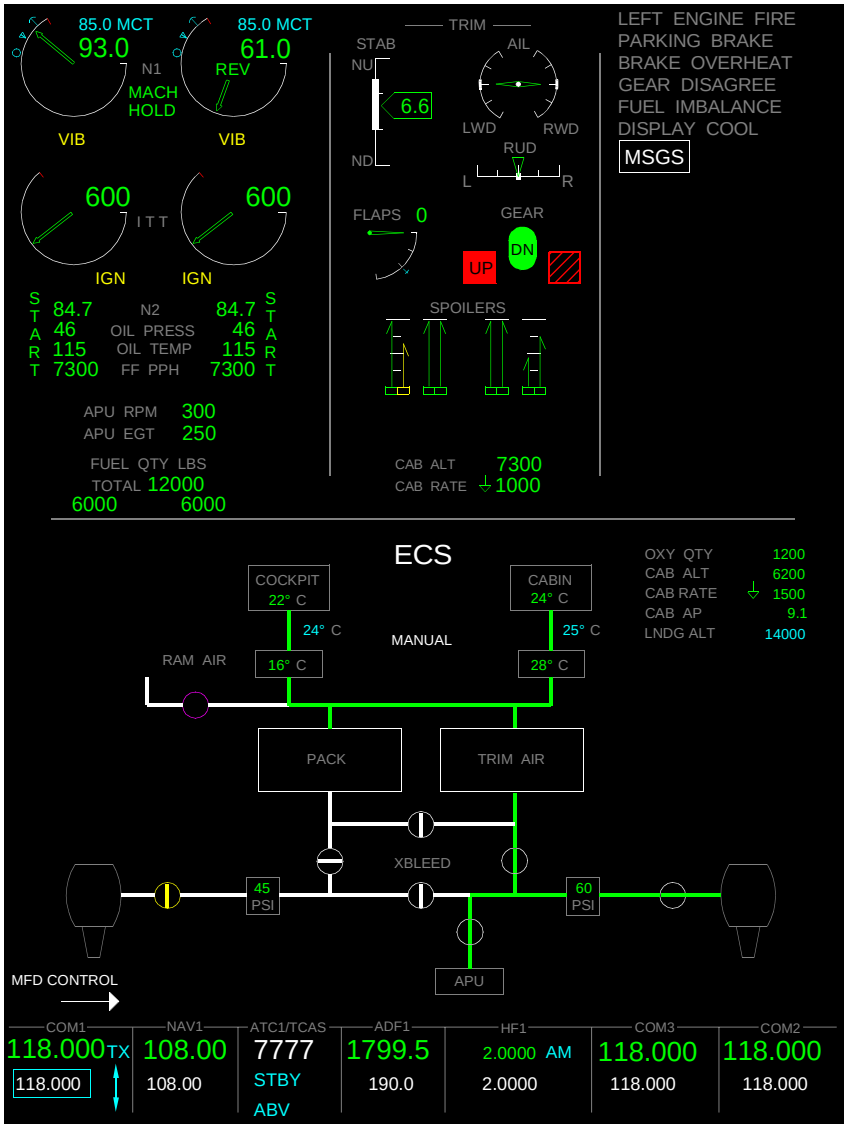

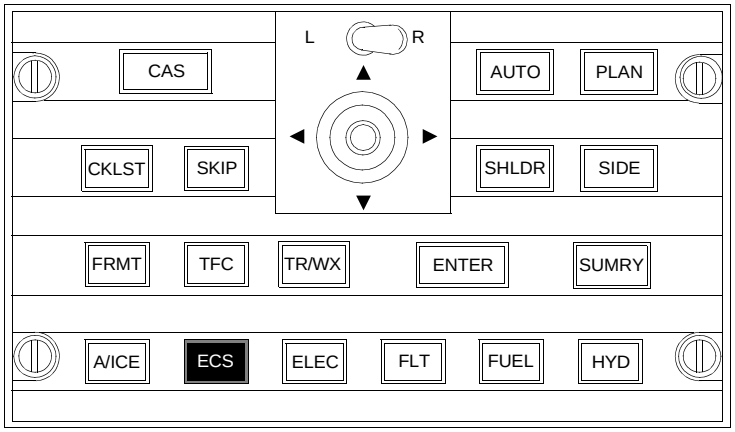

CFO305002_010

EICAS MESSAGES

The air conditioning/pressurization system CAS messages and voice aurals are listed below. A brief explanation of each message is provided.

MESSAGE	INHIBITS	MEANING	AURAL WARNING
CABIN ALTITUDE	TO/LAND	The normal cabin altitude warning is at 9400 ft When a takeoff or landing is conducted above 7850 ft, the warning is at the field elevation + 1550 ft, but limited to no higher than 14 300 ft	“Cabin Altitude”
CABIN DELTA P	TO/LAND	The cabin differential pressure is greater than 9.2 psid or less than -0.5 psid	
L (R) BLEED LEAK	TO/LAND	A leak has been detected in the bleed air ducting downstream of the bleed valve	
PACK LEAK	TO/LAND	A leak has been detected in the pack ducting	
TRIM AIR LEAK	TO/LAND	A leak has been detected in the bleed air ducting downstream of the right flow control valve, up to the precooler crossover and up to the trim air check valve	
L (R) PYLON BLEED LEAK	TO/LAND	A leak has been detected in the engine pylon or tail cone (before shutoff valve)	
AIR COND TEMP FAIL	TO/LAND	The automatic temperature control system has failed	
AIR COND TEMP HIGH	TO/LAND	Excessive air temperature has been sensed in the cabin or cockpit air distribution duct	
AUTO PRESS FAIL	TO/LAND	Both automatic pressurization modes have failed	
L (R) BLEED FAIL	TO/LAND	The affected engine bleed air valve has failed or a temperature or pressure has exceeded limits or the sensor has failed. Under certain low thrust conditions (ground idle at high field elevations or idle with single bleed on), there may be insuffi-cient pressure to keep the bleed valve open	
L (R) BLEED LOOP FAIL	TO/LAND	A failure (open or short circuit) has been detected in the bleed leak detection system	
CABIN ALTITUDE	TO/LAND	Normal cabin altitude caution is 8500 ft During takeoff or landing above 7850 ft, the caution is set to field altitude + 650 ft with a maximum limit of 14 300 ft	
CABIN PRESS FAULT	TO/LAND	Either the pressure sensor has failed or cabin altitude limiter function has failed	

MESSAGE	INHIBITS	MEANING	AURAL WARNING
DITCHING NOT AVAIL		The ditching switch has been selected On with the pressurization switch in the manual mode	
EQPT RACK TEMP HIGH	TO/LAND	The temperature in either equipment rack is high	
PACK FAIL	TO/LAND	A failure has been detected in the PACK system	
PACK LOOP FAIL	TO/LAND	Both bleed air leak detection loops in the PACK have failed during the power up self test	
PACK TEMP HIGH	TO/LAND	An overheat has been detected in the air conditioning PACK system	
L (R) PYLON LOOP FAIL	TO/LAND	Both bleed leak detection loops in the respective pylon have failed during the power up self test	
TRIM AIR FAIL	TO/LAND	A hot air regulating valve has failed	
TRIM AIR LOOP FAIL	TO/LAND	The bleed air leak detection loops around the trim air ducting have failed	
XBLEED FAIL	TO/LAND	The crossbleed valve has failed to move to the commanded position	
AIRCOND FAULT	TO/LAND	A fault has been detected in the air conditioning system or there has been a loss of temperature sensing	
BLEED LOOP FAULT	TO/LAND	A fault has been detected in the bleed leak detection loop system and redundancy is lost	
L (R) BLEED FAULT	TO/LAND	The bleed pressure data is invalid, or the affected flow control valve is failed closed	
CABIN ALT WARN HIGH	LAND	A high airport takeoff or landing has been initiated and the pressurization system is in the automatic mode	
EQPT RACK COOL FAULT	TO/LAND	A fault has been detected in the avionics equipment rack cooling system	
MANUAL PRESS FAIL	TO/LAND	The manual pressurization mode is not operational	
PACK COOL AIR FAIL	TO/LAND	The ram air regulating valve supplying cooling air to the PACK heat exchanger has failed	
RAM AIR FAIL	TO/LAND	The RAM AIR ventilation valve has failed to move to the commanded position	
AIR COND MAN TEMP ON		The air conditioning temperature control is in manual mode	

MESSAGE	INHIBITS	MEANING	AURAL WARNING
AIR SOURCE OFF		The AIR SOURCE switch is in the OFF position resulting in no conditioned air entering the cabin	
BLEED OFF		The L, R, and APU BLEEDs are OFF	
DITCHING ON		The DITCHING switch/indicator has been selected ON. This closes the flow control valves and commands the outflow valve open for 100 seconds or 10 seconds after cabin differential pressure decreases below 1595 psid. The outflow valve then closes	
EMER DEPRESS ON		Emergency depressurization has been selected. Emergency depressurization commands the outflow valve open, but will attempt to limit the cabin altitude to approximately 15 000 ft	
MANUAL PRESS ON		The MANUAL PRESSURIZATION mode has been selected	
PACK ONLY		The AIR SOURCE switch is in the PACK ONLY position, resulting in all air conditioning bleed air being routed through the PACK	
RAM AIR ON		The RAM AIR switch has been selected ON, providing ram air ventilation	
XBLEED OPEN		The cross bleed valve is open	
TRIM AIR ONLY		The AIR SOURCE switch is in the TRIM AIR ONLY position, resulting in all air conditioning bleed air being routed through the trim air system. The air will be warm	

Table of Contents

Introduction 03-01-01
Engine Indicating and Crew Alerting System (EICAS) 03-02-01
Description 03-02-01
Components and Operation 03-02-02
Display Cooling 03-02-02
Data Concentrator Units 03-02-02
Systems Test Control Panel 03-02-02
Description 03-02-02
Components and Operation 03-02-02
Master Warning/Master Caution Switches 03-02-04
Aural Warning Disable 03-02-04
MFD Control Panel (MCP) 03-02-05
Multifunction Display (MFD) 03-02-06
Reversion Switch Panel 03-02-09
Description 03-02-09
Components and Operation 03-02-09
Left Displays Reversion Switch 03-02-09
Right Displays Reversion Switch 03-02-10
ATT/HDG Reversion Switch 03-02-10
Air Data Reversion Switch 03-02-10
Tune Switch 03-02-10
Integrated Avionics Processor System (IAPS) 03-02-11
Description 03-02-11
Components and Operation 03-02-11
Integrated Avionics Processor System Card Cage 03-02-11
Input/Output Concentrator Unit 03-02-11
Integrated Avionics Processor System Power Supply 03-02-11
Integrated Avionics Processor System Environmental Controller (IEC) 03-02-11
Maintenance Diagnostics Computer 03-02-12
Description 03-02-12
Components and Operation 03-02-12
Cockpit Voice Recorder 03-02-12
Description 03-02-12
Components And Operation 03-02-12
Messages 03-03-01
EICAS Warning Messages 03-03-01
EICAS Caution Messages 03-03-02
EICAS Advisory Messages 03-03-04
EICAS Status Messages 03-03-05
EICAS Voice Messages 03-03-05
Message/Message Sounds 03-03-06
Controls and Indications 03-04-01
Multi-Function Displays (MFD) 03-04-01
Anti-Ice Synoptic Page 03-04-02
ECS Synoptic Page 03-04-03
Electrical Synoptic Page 03-04-04
Flight Controls Synoptic Page 03-04-05
Fuel Synoptic Page 03-04-06
Hydraulic Synoptic Page 03-04-07
EICAS Messages 03-05-01

INTRODUCTION

The indicating and recording system consists of components that record and display critical aircraft information and system operation. Aural and visual warnings are provided by the engine indication and crew alerting system (EICAS).

The EICAS provides the following functions:

- Automatic system monitoring
- Integration of system information
- Color logic for visual presentation of operating limits
- Aural alert warning messages

Information is provided on four liquid crystal adaptive flight displays (AFDs). Master warning and caution lights on the glareshield enhance the indication system. Aural signals are generated within the data concentrator units (DCUs) and are heard through the flight deck speakers and headsets.

The cockpit voice recorder (CVR) is a crash survivable device that stores up to 2 hours of voice recordings.

The maintenance diagnostic computer (MDC) is used to record engine and line replaceable unit (LRU) status and parameters. MDC data can be downloaded for system diagnosis and fault identification.

ENGINE INDICATING AND CREW ALERTING SYSTEM (EICAS)

DESCRIPTION

The function of the EICAS is to display the engine instruments and give visual and aural crew-alert messages and real time interpretation of aircraft system operation.

Most EICAS information is normally displayed on the left and right multifunction displays (MFDs). Some display information is shown by default, other information is available through selection. The top half of the left MFD normally displays engine indications (EI) on the left, aircraft configuration (gear, flaps, spoilers, trim) in the middle, and Crew Alerting System (CAS) messages on the right. The top half of the right MFD normally displays the summary synoptic page, but the electronic crew checklist can be selected. Maintenance diagnostic information can also be displayed in this area by maintenance personnel. The bottom half of both MFDs can display navigation information or system synoptic pages as selected by the crew. Control of displayed information is provided by the MFD control panel (MCP) located on the center pedestal. A composite flight instrument/EICAS can be displayed in the event of display failure. Select PFD Rev or MFD Rev on the Reversion panel to access these displays. The FRMT button on the display control panel is used to select the SUMMARY synoptic page for display when PFD REV is selected on the reversion panel. The summary synoptic is only available when an on-side display is reverted.

Engine indications are provided on the left MFD. Color is used to depict normal (green), non-normal (amber or red) and loss of data (magenta).

The crew alerting system (CAS) provides visual and aural alerts when the data concentrator units (DCUs) detect a malfunction. The CAS prioritizes messages by order of order of importance and order of occurrence.

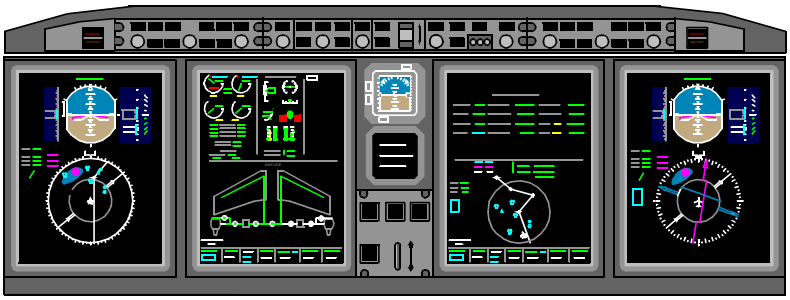

The order of importance of messages is accomplished by the use of color displays and aural alerts.

EICAS COLOR LOGIC AND SYNOPTIC PAGE PRESENTATION

The Challenger 300 uses a Quiet Dark Cockpit Philosophy for system indications.

Cockpit indications remain quiet and dark during the following:

- Normal operation (no abnormalities or failures)
- Daylight
- Visual meteorological conditions (VMC)
- Non-icing conditions
- Cruise flight

Color Logic is used to depict system values:

- Red — Warning condition or system limit exceeded
- Amber — Component or function failed or there is no flow, energy or pressure
- Green — Normal operation for digital values. Normal flow, energy or pressure in flowlines
- White — Normal status of component (pump, valve, etc.) or no flow through the flowline
- Magenta — Invalid or unknown data

COMPONENTS AND OPERATION

DISPLAYS

The PFDs and MFDs are computer controlled liquid crystal adaptive flight displays (AFDs). All four displays are identical and interchangeable.

DISPLAY LIGHTING ADJUSTMENT

Two separate concentric knobs (PFD and MFD) adjust display lighting intensity on the COCKPIT LIGHTS panel. They are located on the left and right side panels.

DISPLAY COOLING

Cooling and ventilation of the PFD and MFD displays is achieved by the cockpit air distribution system. The avionics cooling fan and cockpit air conditioning systems is designed to maintain the ambient temperature of the displays.

DATA CONCENTRATOR UNITS

The two data concentrator units (DCU A and DCU B), are essential to the EICAS. The DCUs collect data from various aircraft systems, process the information and relay it to the proper component or display.

SYSTEMS TEST CONTROL PANEL

DESCRIPTION

The SYSTEMS TEST control panel is installed in the center pedestal. The switch is used to start a pilot initiated test of several systems. The switch is momentarily pushed to start the applicable test.

The aural warnings other than TCAS and TAWS occur in sequence of importance. Once the test has started, the switch may be released. Pressing the switch again will cancel the test.

COMPONENTS AND OPERATION

Selecting ANUN A or ANUN B on the SYSTEMS TEST panel and pressing and holding the switch for 15 seconds illuminates all panel lights and gives the aural warnings as follows:

- Triple or single chimes
- Aural warning tones
- Voice alarms

The other systems tests are as follows:

- PROBES — tests air data probes and sensors
- STALL RUD/LIM — tests the stall protection system
- ICE DET — tests the ice detection system
- FIRE DET — tests the fire detection and extinguishing (FIREX) system
- TAWS — tests the terrain avoidance warning system

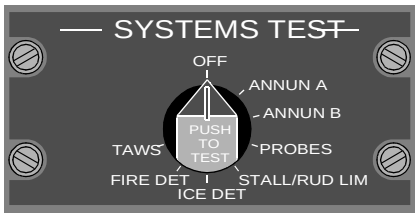

CFO0901002_010

ENGINE INDICATING AND CREW ALERTING SYSTEM (EICAS) (Cont)

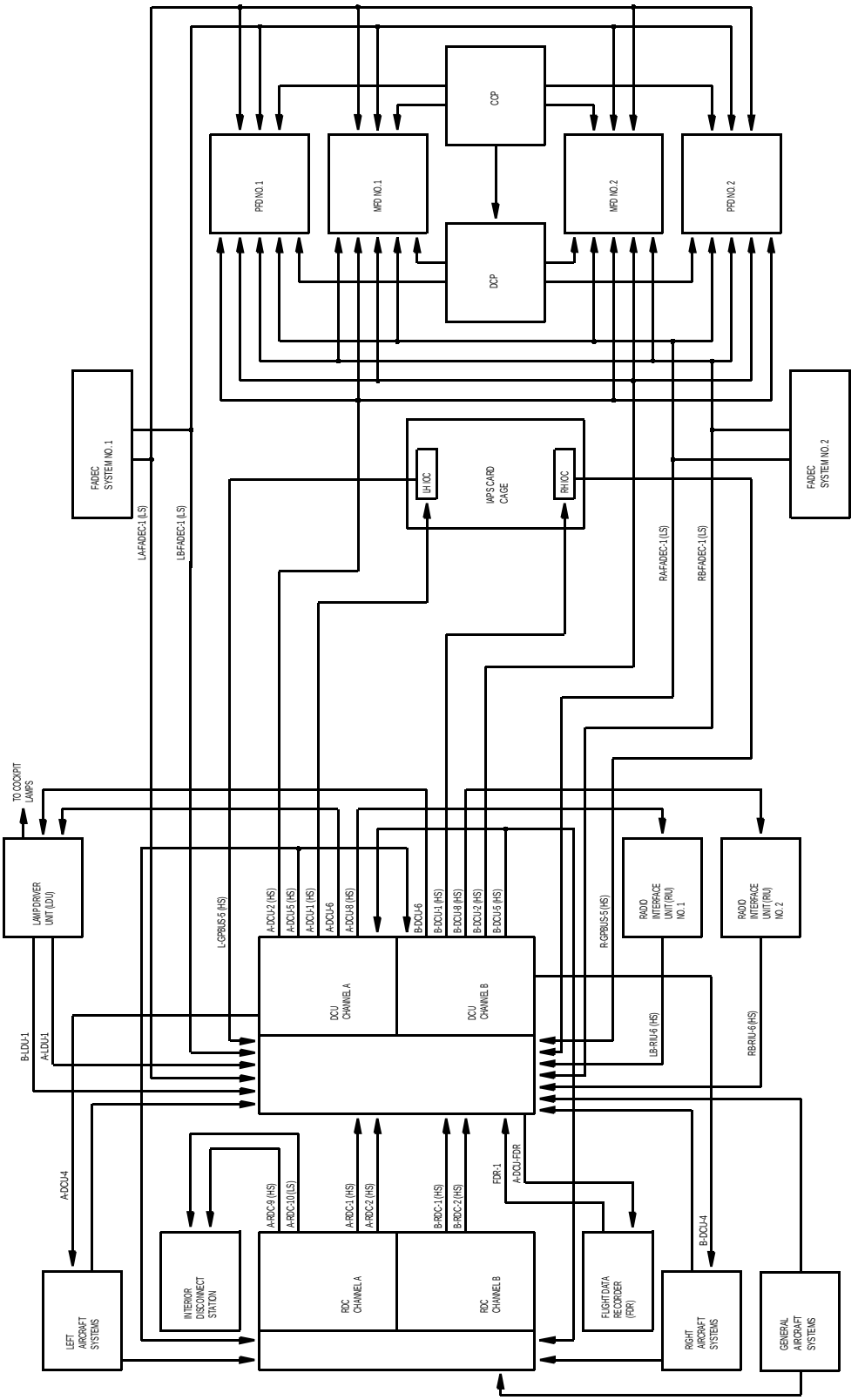

ENGINE INDICATING AND CREW ALERTING SYSTEM (EICAS) (Cont)

MASTER WARNING/MASTER CAUTION SWITCHES

The master warning/master caution switches are located on the glareshield. When the DCUs generate a warning message, the master warning half of the two switches flash red. A triple chime accompanies the master warning lights. In addition, dedicated tones or voice messages may sound.

When the switch is pressed, the flashing light and the audio alerts are reset.

When the DCUs generate a caution message, the master caution half of the two switches flash amber. A single chime will accompany the master caution lights.

When the switch is pressed, the flashing light in the switches will reset.

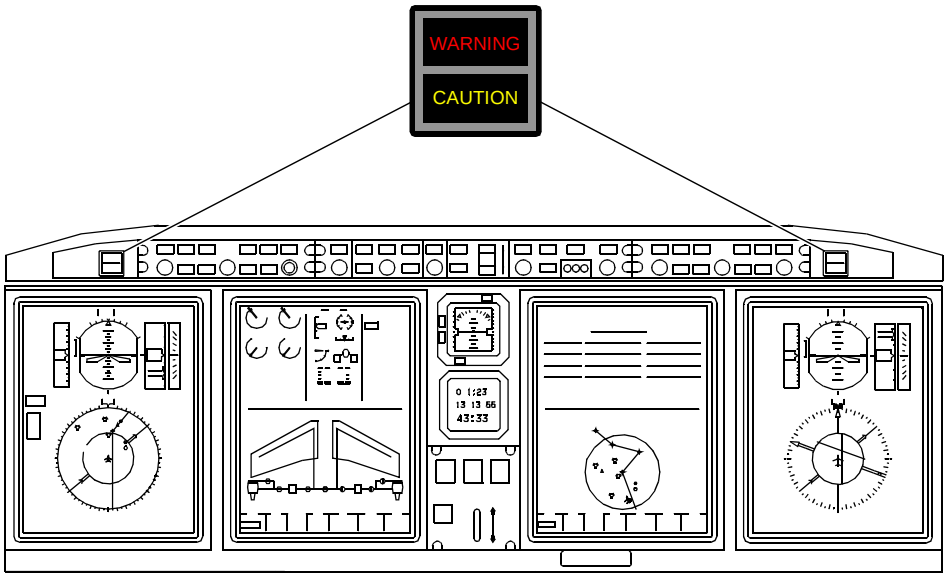

CFO0301002_001

AURAL WARNING DISABLE

Two AURAL WARNING disable switches located on the AURAL WARNING panel on the copilot aft cockpit bulkhead above the circuit breaker panel are used to disable and silence the aural warnings of a malfunctioning DCU. When DCU A is selected to OFF, DCU B provides the aural warning function. Selecting both DCU switches to OFF disables all EICAS aural warnings. These should only be used if problems with the aural warning system is encountered, or as directed by AFM procedure

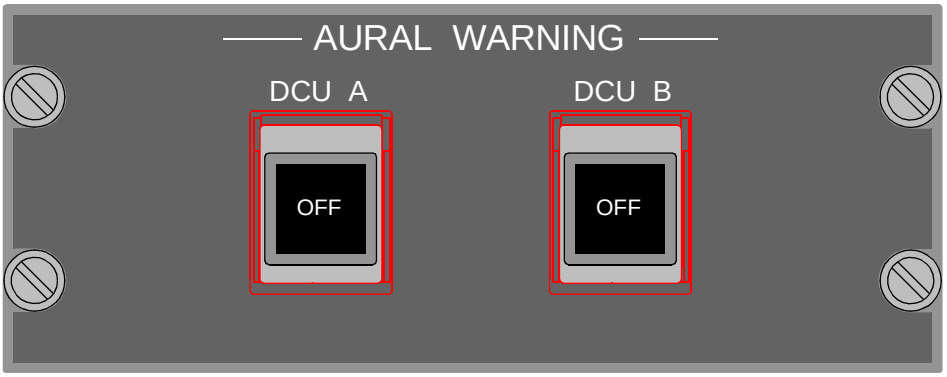

CFO0302002_005

ENGINE INDICATING AND CREW ALERTING SYSTEM (EICAS) (Cont)

MFD CONTROL PANEL (MCP)

The MFD Control Panel is located on the center pedestal and the operation of each control is described below. Illustration is shown with the optional 3D map display switches (refer to Chapter 11-01-25 for further description).

CFO0302002_009

L/R TOGGLE

The L/R toggle switch allows the flight crew to select control to the left or right MFDs.

CAS

Pressing the CAS switch once removes the caution, advisory, and status messages, and a white MSGS icon will display. Pressing the CAS switch a second time causes the messages to reappear.

When a new message is generated, it appears above the MSGS icon. Pressing the CAS switch hides the new message. Warning messages can not be paged out of view.

CKLST

Selecting the CKLST switch displays the electronic checklist on the right MFD.

SKIP

This switch skips checklist items on the display.

FRMT

The FRMT switch selects the MFD format. The available selections are present position (PPOS, heading at top), PLAN (North at top), TCAS only.

TFC

The TFC switch selects the TCAS overlays on the MFD.

TR/WX

The TR/WX switch selects terrain, weather, and lightning overlays on the MFD.

ENTER

The ENTER switch is used in conjunction with the joystick for entering waypoints, completing checklist items, or while in the maintenance mode.

SUMRY

Selecting the SUMRY switch displays the summary synoptic on the bottom part of the MFD.

ENGINE INDICATING AND CREW ALERTING SYSTEM (EICAS) (Cont)

MFD CONTROL PANEL (MCP) (Cont)

A/ICE

Selecting the A/ICE switch displays the anti-ice synoptic page.

ECS

Selecting the ECS switch displays the environmental control system synoptic page.

ELEC

Selecting the ELEC switch displays the electrical system synoptic page.

FLT

Selecting the FLT switch displays the flight control system synoptic page.

FUEL

Selecting the FUEL switch displays the fuel system synoptic page.

HYD

Selecting the HYD switch displays the hydraulic system synoptic page.

MULTIFUNCTION DISPLAY (MFD)

ENGINE INDICATIONS

Engine indications are presented as digital readouts and also in an analog scale format for N_1 and ITT. The indications are located on the top half of the left MFD.

Displayed engine parameters include:

- N_1 speed (%)
- Interturbine temperature (ITT) (°C)
- N_2 speed (%)
- Oil pressure (psi)
- Oil temperature (°C)
- Fuel flow (lb/hr-kg/hr)

The following engine indications are presented “as required”:

- Reverse thrust icons (REV) are displayed within the N1 analog gage when the thrust reversers are in transition (white), deployed (green), or red (unsafe)
- A VIB (amber) icon is displayed below the N_1 gage when the vibration exceeds a predetermined value and has an associated CAS message
- SYNC or MACH HOLD display shows between the N1 analog displays when either the engine sync or Mach hold mode is selected (green when active and white when armed)
- The ignition icon (IGN) is displayed below the ITT gage when the ignitor is operating (green) or failed (amber)
- The START icon is displayed vertically outside of the digital displays of N2, oil pressure, oil temperature, and fuel flow when the FADEC is commanding a start

AUXILIARY POWER UNIT

The APU digital RPM and EGT displays (green) are presented below the engine instruments on the top half of the left MFD.

FUEL QUANTITY

Fuel quantities are displayed below the APU RPM and EGT information in green on the EICAS. Fuel quantities presented include left, right, and total.

TRIM SETTINGS

Aileron, horizontal stabilizer, and rudder trim settings are continuously displayed on the upper middle of the left MFD.

Aileron, horizontal stabilizer and rudder trim indications are green when trims are set in the takeoff range when on the ground and in red for a configuration warning. In flight, the indicators are white.

ENGINE INDICATING AND CREW ALERTING SYSTEM (EICAS) (Cont)

MULTIFUNCTION DISPLAY (MFD) (Cont)

FLAPS, LANDING GEAR AND SPOILERS

Flaps, landing gear and spoilers information is presented graphically (green), with flaps also presented in a digital format. The flaps, gear, and spoiler information are decluttered (removed) from the display when this equipment is retracted or stowed.

CABIN PRESSURIZATION

Cabin altitude and cabin rate of climb/descent are displayed below the spoiler information. An arrow displays climb or descent.

CREW ALERTING SYSTEM MESSAGES (CAS)

CAS messages are displayed on the right side of the top half of the left MFD. All red messages are displayed at the top, in order of occurrence (last message at top). Amber, cyan, and then white messages are displayed below the red messages, in that order.

EICAS MESSAGES

The Crew Alerting System (CAS) provides visual and aural alerts during a malfunction. The CAS prioritizes messages by order of importance and order of occurrence.

The order of importance is accomplished by the use of color and aural alerts. The four levels of CAS message importance are: Warning, Caution, Advisory, and Status.

For order of occurrence, the most recent message is displayed at the top of its associated list.

WARNING (W) MESSAGES

The most urgent messages are warnings and red in color. Red warning messages are presented on the top of the CAS page and remain in view until the problem is resolved.

Warning messages require immediate action and are always accompanied by:

- Triple chime
- Flashing master warning lights

Warning messages, in addition to the above indications, can also generate:

- Voice message

Pressing either master warning switch:

- Silences the aural alerts (except for a non-mutable gear warning)
- Stops the flashing of the master warning lights

CAUTION (C) MESSAGES

Caution messages are second in order of importance. Amber caution messages appear directly below any warning messages that may be displayed.

Caution messages require prompt action and are always accompanied by:

- Single chime
- Flashing master caution lights

Pressing either master caution switch:

- Stops the flashing of the master caution lights

ENGINE INDICATING AND CREW ALERTING SYSTEM (EICAS) (Cont)

MULTIFUNCTION DISPLAY (MFD) (Cont)

ADVISORY (A) MESSAGES

Cyan advisory messages appear directly below any caution messages that may be displayed. Advisory messages are generated when crew awareness is required and subsequent crew action may be required. Advisory messages indicate:

- Non-pilot selected automatic activation of certain critical systems (L or R FUEL PUMP ON)
- Loss of system redundancy
- Needed information not related to a change of system status (SELCAL)
- May have a tone associated (i.e. cabin call or voice SELCAL)

STATUS (S) MESSAGES

White status messages appear directly below any advisory messages that may be present.

White status messages:

- Indicate the state of a specific system that has been manually activated

INHIBITED EICAS MESSAGES

Takeoff and landing are the most critical phases of flight, and the most workload intensive. Accidents can occur during these phases of flight due to the crew becoming distracted by minor non-relevant system problems. To reduce the possibility of this occurring, some warning messages, most caution messages, and all advisory messages are inhibited during the takeoff and landing phase.

Selected messages are inhibited for takeoff when airspeed is above 80 kts, and the aircraft reaches 400 ft AGL.

Selected messages are inhibited during landing when the aircraft descends below 400 ft AGL and airspeed decreases to less than 40 kts. Inhibited messages are indicated with a X in the respective column.

When a message is triggered during an inhibit period, the message and the master/caution (if appropriate) illuminates as the aircraft exits the inhibit envelope.

SYNOPTIC PAGES

The synoptic pages can be selected for presentation on the bottom half of either MFD by using the individual switches located on the MCP control panel. The synoptic pages provide the pilot real-time indication of aircraft system operation. Each synoptic page displays the aircraft systems as a schematic diagram.

ANTI-ICE

The anti-ice synoptic page displays the operation of the following systems:

- Bleed air system
- Wing anti-ice system
- Engine anti-ice system

ECS

The ECS synoptic page displays information for the following systems:

- Bleed air
- Air conditioning
- Pressurization

ELECTRICAL

The electrical synoptic page displays the system using a block diagram.

FLIGHT CONTROLS

The flight control synoptic page displays the positions of the ailerons, elevator, rudder and spoilers.

ENGINE INDICATING AND CREW ALERTING SYSTEM (EICAS) (Cont)

MULTIFUNCTION DISPLAY (MFD) (Cont)

FUEL

The fuel synoptic page displays fuel quantities, fuel temperature, and fuel system operation.

HYDRAULIC

The hydraulic system synoptic page displays the engine pumps, auxiliary pumps, status of reservoirs, and hydraulic fluid temperature and pressure. The synoptic pages represent actual valve operation using color to identify the state and serviceability of the valve. Red indicates failure, yellow indicates a cautionary status, white indicates normal with no dynamic flow, green indicates normal with dynamic flow, and magenta invalid or unknown status. Each valve has an outline and a flowline.

REVERSION SWITCH PANEL

DESCRIPTION

A reversion switch panel, located on the pilot's side of the center pedestal above the spoiler handle, provides an alternate method of displaying EICAS information should one of the EICAS displays fail.

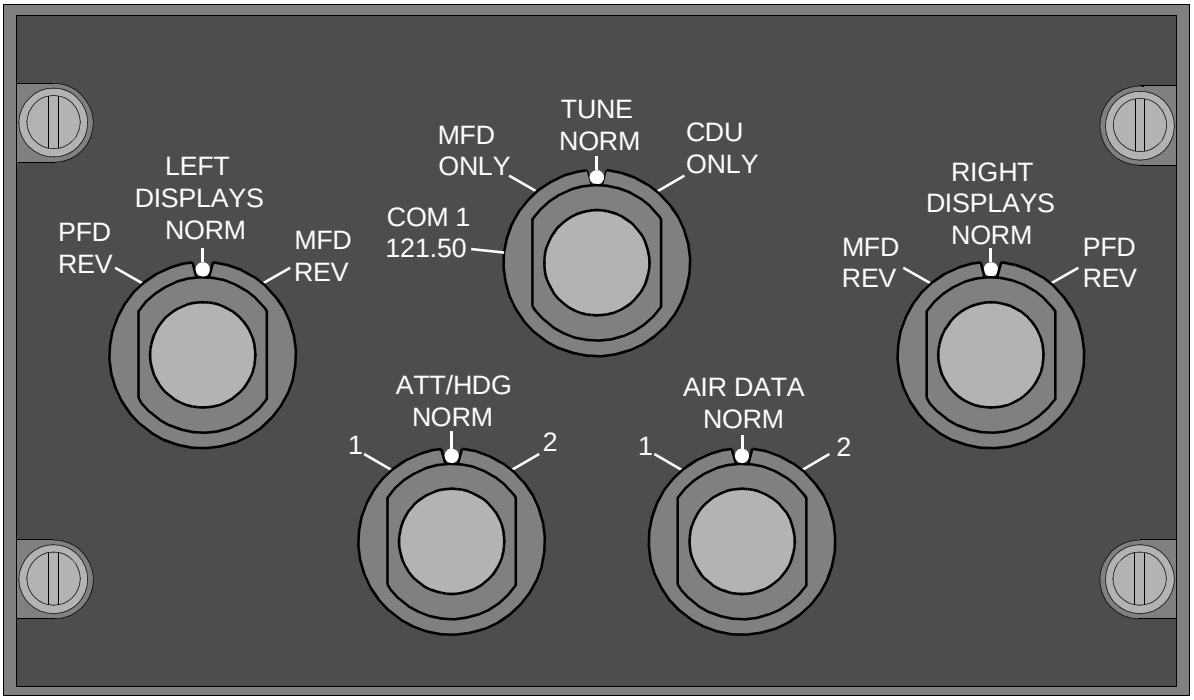

COMPONENTS AND OPERATION

The following is a brief description of the reversion panel switches:

LEFT DISPLAYS REVERSION SWITCH

The LEFT DISPLAYS reversion switch is a three-position switch, enabling the reversion of the left side PFD/MFD displays.

PFD REV

L-PFD displays compressed format. L-MFD is shut down.

NORM

L-PFD format is normal. L-MFD format is normal.

MFD REV

L-PFD is shut down. L-MFD displays compressed format.

REVERSION SWITCH PANEL (Cont)

RIGHT DISPLAYS REVERSION SWITCH

The RIGHT DISPLAYS reversion switch is a three-position switch, enabling the reversion of the right side MFD/PFD displays.

MFD REV

R-MFD displays compressed format. R-PFD is shut down.

NORM

R-MFD format is normal. R-PFD is normal.

PFD REV

R-MFD is shut down. R-PFD displays compressed format.

ATT/HDG REVERSION SWITCH

The ATT/HDG reversion switch is a three-position switch.

1

All displays use AHRS 1 data.

NORM

The displays use their own side AHRS (Pilot-1,copilot-2).

2

All displays use AHRS 2 data.

AIR DATA REVERSION SWITCH

The AIR DATA reversion switch is a three-position switch.

1

All displays use ADC 1 data.

NORM

The displays show on-side data.

2

All displays use ADC 2 data.

TUNE SWITCH

The TUNE switch is a four-position switch.

COM1 121.50

COM 1 is tuned to 121.50 MHz emergency frequency

MFD ONLY

Tuning enabled only by MFD. Tuning of the radios by the CDU(s) is disabled;.

NORM

Tuning is normal and can be done through the MFDs or the CDUs as desired.

CDU ONLY

Tuning of the radios enabled only by CDUs. Tuning by the MFD is disabled.

INTEGRATED AVIONICS PROCESSOR SYSTEM (IAPS)

DESCRIPTION

The integrated avionics processor system (IAPS) is a physical collection of functional modules combined into an efficient mechanical package to minimize size, weight, and aircraft wiring, and to improve system reliability and maintainability.

The IAPS independently transmits signals more than once, and each part has independent power. The IAPS also reads some avionics busses and sends data words to the LRUs that use that data. The IAPS performs ARINC data processing and distribution for avionics LRUs.

The IAPS consists of various functional units. The input/output concentrator units (IOCs) get data words and transmit them to the correct LRU. The IAPS power supplies energize the IOCs. The IAPS environmental controller (IEC) monitors the housing temperature and controls the fans. The control strapping units (CSUs) and the options control modules (OCMs) set the IAPS strap settings.

The maintenance diagnostic computer (MDC), the flight management computers (FMCs), and the flight guidance computers (FGCs) are in the IAPS card cage (ICC), but they are not part of the IAPS itself.

Their are no pilot-controlled operations required for the IAPS. Their are no pilot-controlled reversionary operations for the IAPS.

COMPONENTS AND OPERATION

INTEGRATED AVIONICS PROCESSOR SYSTEM CARD CAGE

The IAPS card cage is the housing that contains all the components of the IAPS. The ICC is in the right equipment rack.

INPUT/OUTPUT CONCENTRATOR UNIT

The IAPS data receives from and transmits to many external systems. External system data is transmitted through the ICC circuit card.

The two input/output concentrator units transmit data to other LRUs related to their operation. The IOCs transmit all the display data from other LRUs to the displays.

INTEGRATED AVIONICS PROCESSOR SYSTEM POWER SUPPLY

The IAPS has an input from the 28 vdc main busses. The voltage is filtered and applied to the IAPS power supplies. The two power supplies independently supply the applicable voltages to the necessary units in the IAPS. The No. 1 power supply energizes the No. 1 FGC, FMC, and IOC No. 1. The No. 2 power supply energizes the No. 2 FGC, FMC, MDC, and IOC unit No. 2.

INTEGRATED AVIONICS PROCESSOR SYSTEM ENVIRONMENTAL CONTROLLER (IEC)

The IEC controls the temperature for the ICC. The IEC monitors a pair of ICC temperature sensors and operates fans to control the IAPS environment in each half of the IAPS.

The IEC has a power supply, two thermostats, two transducer monitor circuits, a two-speed fan, and a heat exchanger.

MAINTENANCE DIAGNOSTIC COMPUTER

DESCRIPTION

The maintenance diagnostic computer (MDC) is an onboard computer that records aircraft mechanical and avionics system data. Maintenance personnel can retrieve the information for use in engine trend analysis computation, significant event recording, and avionics/aircraft system failure detection. The MDC is part of the IAPS and consists of an electronic circuit board located in the ICC

COMPONENTS AND OPERATION

The MDC continuously records data for fault analysis and engine trend monitoring.

The MDC monitors engine operating time and counts the number of engine starts and thrust reverser deployments.

The MDC records engine parameters at takeoff to track engine efficiency.

If the engines exceed a maximum operating limit, the peak exceedance value is recorded along with the time and duration of the occurrence.

The MDC data is downloadable to a maintenance facility computer. The data base unit (DBU) is located behind the pilot on the forward bulkhead forward of the entry door. There is also a portable maintenance access terminal (PMAT) located on the aft side of the equipment rack near the floor.

MDC data is available (when on the ground) on the top half of the right MFD by simultaneously selecting A/ICE, ECS, and FUEL on the CCP controller. Accessing MDC data is not needed during flight and is intended to be a maintenance function.

COCKPIT VOICE RECORDER

DESCRIPTION

The cockpit voice recorder (CVR) is a crash survivable recording device that accommodates mandatory cockpit voice recordings up to 2 hours. The CVR is mounted in the aft equipment bay.

COMPONENTS AND OPERATION

The system records the following four audio channels:

- Copilot’s audio, boom/mask and hand held microphone
- Pilot’s audio, boom/mask and hand held microphone
- Cockpit area microphone
- Observer 3rd audio, boom/mask (Optional)

These 4 channels are recorded separately for 30 minutes at high quality recording. In addition, another 2 channels that are generated from the first four channels are recorded at standard quality for 120 minutes. The first channel is the area microphone and the second is a summation of the pilot and copilot’s boom/mask, hand held microphone and the observer 3rd audio (if installed). The system starts recording when power to the left main bus is applied.

The CVR control unit is located on the center pedestal and contains an indicator, headset jack, and erase and test switches. The test switch and indicator provide the test the area microphone channel. The headset jack provides continuos monitoring of all four recorded channels. The bulk erase switch is used to erase the entire recorded data after flight, and will only work when the aircraft is in a weight-on-wheels condition and the parking brake is ON and the hydraulic system is pressurized. To prevent accidental erasures, a time delay circuit makes it necessary to depress the switch for two seconds to start the erasure process.

MESSAGES

EICAS WARNING MESSAGES				
Most warning messages are preceeded by a triple chime.				
Message	Inhibits	Chapt. ref.	Aural Alerts	Voice Alerts
APU FIRE	-	5/9	Triple Chime	"APU FIRE"
APU OVERTEMP	TO/LAND	5	Triple Chime	None
L (R) BATT OVERHEAT	TO/LAND		Triple Chime	None
ESSENTIAL POWER ONLY	-	7	Triple Chime	None
L (R) BLEED LEAK	TO/LAND	2/14	Triple Chime	None
CABIN ALTITUDE	TO/LAND	2	None	"CABIN ALTITUDE"
CABIN DELTA P	TO/LAND	2	Triple Chime	None
CARGO SMOKE	-	9	Triple Chime	None
CONFIG AILERON TRIM	-	10	Triple Chime	"CONFIGURATION"
CONFIG AUTOPILOT	-	4	Triple Chime	"CONFIGURATION"
CONFIG FLAPS	-	10	Triple Chime	"CONFIGURATION"
CONFIG RUDDER TRIM	-	10	Triple Chime	"CONFIGURATION"
CONFIG SPOILERS	-	10	Triple Chime	"CONFIGURATION"
CONFIG STAB TRIM	-	10	Triple Chime	"CONFIGURATION"
GEAR	-	15	Triple Chime	"GEAR"
GEAR BAY OVHT	TO/LAND	9/15	Triple Chime	None
L (R) ENG OIL PRESS LOW	TO/LAND	18	Triple Chime	None
L (R) ENGINE EXCEEDANCE	-	18	Triple Chime	None
L (R) ENGINE FIRE	-	9	Triple Chime	"LEFT (RIGHT) ENGINE FIRE"
HYD PRESS LOW	-	13	Triple Chime	None
NORM BRAKES FAIL	TO	15	Triple Chime	"NORMAL BRAKES FAIL"
PACK LEAK	TO/LAND	2	Triple Chime	None
PARK/EMER BRAKE ON	-	15	Triple Chime	"CONFIGURATION"
PITCH DISCONNECT	-	10	Triple Chime	"CONFIGURATION"
L (R) PYLON BLEED LEAK	TO/LAND	2/14	Triple Chime	None
L (R) REVERSER UNSAFE	-	18	Triple Chime	None
ROLL DISCONNECT	-	10	Triple Chime	"CONFIGURATION"
TRIM AIR LEAK	TO/LAND	2	Triple Chime	None
WING ANTI-ICE LEAK	TO/LAND	14	Triple Chime	None
L (R) WING OVERHEAT	-	14	Triple Chime	None

MESSAGES (Cont)

EICAS CAUTION MESSAGES		
All caution messages are preceeded by a single chime.		
Message	Inhibits	Chapt. ref.
AFCS MESSAGES FAIL	TO	
AFT EQPT BAY DOOR	TO/LAND	2
AIR COND TEMP FAIL	TO/LAND	2
AIR COND TEMP HIGH	TO/LAND	2
AIR DATA 1 (2) FAULT	TO/LAND	
L (R) AOA VANE HEAT FAIL	TO/LAND	
AP HOLDING LWD	TO	
AP HOLDING RWD	TO	
AP HOLDING NOSE DOWN	TO	
AP HOLDING NOSE UP	TO	
AP STAB TRIM FAIL	TO	
APU BLEED ALT LIMIT	TO/LAND	5
APU FAULT	TO/LAND	
APU FIRE DET FAIL	TO/LAND	9
APU FUEL SOV FAIL	TO/LAND	12
APU GEN FAIL	TO/LAND	7
APU GEN OVERLOAD	TO/LAND	7
APU OIL PRESS LOW	TO/LAND	5
APU OIL TEMP HIGH	TO/LAND	5
APU OVERSPEED	TO/LAND	
APU SHUTDOWN	TO/LAND	
APU STARTER FAIL ON	TO/LAND	5
AUTO PRESS FAIL	TO/LAND	2
AUX HYD TEMP HIGH	TO/LAND	13
L (R) BATT FAIL	TO/LAND	7
BATTERY BAY DOOR	TO/LAND	
L (R) BLEED FAIL	TO/LAND	2
L (R) BLEED LOOP FAIL	TO/LAND	2
BRAKE FAULT	TO/LAND	15
CABIN ALTITUDE	TO/LAND	2
CABIN PRESS FAULT	TO/LAND	2
CARGO DOOR	TO/LAND	
CARGO SMOKE DET FAIL	TO/LAND	9
CPLT BRAKE FAULT	TO	15
DITCHING NOT AVAIL	-	
EFIS COMPARATOR INOP	TO/LAND	3/11
EFIS MISCOMPARE	-	3/11
ELECTRICAL FAULT	TO/LAND	7
ELEVATOR SPLIT	-	10
ELT ON	TO/LAND	
EMER LIGHTS OFF	TO/LAND	16
EMER LIGHTS ON	TO/LAND	16
EMERGENCY EXIT	TO/LAND	
L (R) ENG ANTI-ICE FAIL	TO/LAND	18

EICAS CAUTION MESSAGES		
All caution messages are preceeded by a single chime.		
Message	Inhibits	Chapt. ref.
L (R) ENG DSPL MISCOMP	TO/LAND	
L (R) ENG FUEL SOV FAIL	TO/LAND	12
L (R) ENG OIL PRESS HIGH	TO/LAND	18
L (R) OIL TEMP HIGH	TO/LAND	
L (R) ENGINE FLAMEOUT	-	18
L (R) ENGINE VIBRATION	TO/LAND	18
ENGINES FUEL BYPASS	TO/LAND	18
EQPT RACK TEMP HIGH	TO/LAND	2
L (R) ESS BUS FAIL	TO/LAND	7
L (R) FADEC FAIL	TO	18
FD MODE CHANGE	TO	
L (R) FIRE DET FAIL	TO/LAND	9/18
FIRE SYS FAULT	TO/LAND	9
FIREX APU SQUIB FAIL	TO/LAND	9
FLAPS FAIL	TO	10
FLAPS FAULT	TO	10
FLAPS NORM PRESS LOW	TO/LAND	10
FLT SPOILERS DEPLOY	TO	10
FLT SPOILERS FAIL	-	
FLT SPOILERS FAULT	-	
L (R) FUEL COLLECTOR LOW	-	
FUEL IMBALANCE	TO/LAND	12
L (R) FUEL PRESSURE LOW	TO/LAND	12
L (R) FUEL PUMP FAIL	TO/LAND	12
FUEL QUANTITY FAIL	TO/LAND	12
FUEL QUANTITY LOW	TO	12
GEAR BAY DET FAIL	TO/LAND	9
GEAR DISAGREE	-	15
GEAR SYS FAIL	TO	
L (R) GEN FAIL	TO/LAND	7
L (R) GEN OVERLOAD	TO/LAND	7
GND SPLRS NOT ARMED	TO	10
GND SPOILERS FAIL	TO	10
L (R) HYD PRESS LOW	TO/LAND	13
HYD PTU FAIL	-	13
L (R) HYD SOV FAIL	TO/LAND	13
L (R) HYD TEMP HIGH	TO/LAND	13
L (R) IAPS FAIL	TO/LAND	4/11
ICE DETECTED	TO/LAND	14
ICE DETECTOR FAIL	TO/LAND	14
L (R) INBD BRAKE FAIL	TO	15
INBD BRAKE PRESS LO	TO	15

MESSAGES (Cont)

EICAS CAUTION MESSAGES		
All caution messages are preceeded by a single chime.		
Message	Inhibits	Chapt. ref.
INBD BRAKES FAIL	TO	15
MACH TRIM FAIL	TO/LAND	10
L (R) MAIN BUS FAIL	TO/LAND	7
NOSE GEAR DOOR	TO/LAND	15
NWS FAIL	TO	15
NWS LIMIT EXCEEDED	TO/LAND	15
L (R) OUTBD BRAKE FAIL	TO	15
OUTBD BRAKE PRESS LO	TO	
OUTBD BRAKES FAIL	TO/LAND	15
OXYGEN QUANTITY LOW	TO/LAND	8
OXYGEN VALVE CLOSED	TO/LAND	8
PACK FAIL	TO/LAND	2
PACK LEAK	TO/LAND	2
PACK LOOP FAIL	TO/LAND	2
PACK TEMP HIGH	TO/LAND	2
PASSENGER DOOR	LAND	
PAX OXYGEN AUTO FAIL	TO/LAND	8
L (R) PITOT HEAT FAIL	TO/LAND	14
PFD X-TALK FAIL	TO/LAND	11
PARK/EMER BRAKE ON	TO	
PK/EMER BRK PRESS LO	TO	15
PLT BRAKE FAULT	TO	15
PRI STAB TRIM FAIL	-	
L (R) PROBE HEAT OFF	TO/LAND	14
L (R) PYLON LOOP FAIL	TO/LAND	2
L (R) REVERSER FAIL	TO	18
ROLL SPOILERS FAIL	-	10

EICAS CAUTION MESSAGES		
All caution messages are preceeded by a single chime.		
Message	Inhibits	Chapt. ref.
ROLL SPOILERS FAULT	-	
ROLL SPOILERS OFF	-	10
RUDDER LIMITER FAIL	-	10
L (R) START ABORTED	TO/LAND	
SEC STAB TRIM FAIL	-	
SPOILERS FAIL	-	10
SPOILERS FAULT	-	10
STALL PROTECT FAIL	-	10
STALL PUSHER OFF	TO/LAND	10
L (R) START ABORTED	TO/LAND	
L (R) STARTER FAIL	TO/LAND	
L (R) STARTER FAIL ON	TO/LAND	
STBY PITOT HEAT FAIL	TO/LAND	
L (R) STBY STAT HT FAIL	TO/LAND	
TRIM AIR FAIL	TO/LAND	2
TRIM AIR LOOP FAIL	TO/LAND	2
L (R) WINDOW HEAT FAIL	TO/LAND	14
L (R) WING A/ICE FAIL	TO/LAND	14
WING A/ICE LOOP FAIL	TO/LAND	
L (R) WING A/I PRESS HI	TO/LAND	14
WING ANTI-ICE FAULT	TO/LAND	14
WING FUEL TEMP LOW	TO/LAND	12
L (R) WSHLD HEAT FAIL	TO/LAND	
WOW FAIL	TO	15
XBLEED FAIL	TO/LAND	2
YAW DAMPER FAIL	TO/LAND	4

MESSAGES (Cont)

EICAS ADVISORY MESSAGES		
Message	Inhibits	Chapt. ref.
IAPS FAN FAULT	TO/LAND	
ACARS MESSAGE	TO/LAND	
AFIS MESSAGE	TO/LAND	
AIR COND FAULT	TO/LAND	
L (R) AOA CASE HEAT FAIL	TO/LAND	
APU FAULT	-	
APU SHUTDOWN	-	
L (R) AUX BUS FAIL	TO/LAND	
L (R) AUX BUS OFF	TO/LAND	
AUX HYD PUMP FAIL ON	TO/LAND	
AUX HYD SYS FAIL	TO/LAND	
CABIN ALT WARN HIGH	-	
CABIN CALL	TO/LAND	
L (R) BLEED FAULT	TO/LAND	
CVR FAIL	TO/LAND	
DCU FAULT	TO/LAND	
DOWNLOAD FADEC	TO/LAND	
ELECTRICAL FAULT	TO/LAND	
L (R) ENG A/ICE FAIL ON	TO/LAND	
L (R) ENG IGN FAULT	TO/LAND	
L (R) ENGINE FAULT	TO/LAND	
L (R) ENG FUEL TEMP LOW	TO/LAND	
L (R) ENGINE FUEL BYPASS	TO/LAND	
L (R) ENGINE MINOR FAULT	TO/LAND	
L (R) ENGINE OIL BYPASS	TO/LAND	
L (R) ENGINE OIL CHIP	TO/LAND	
L (R) ENG THRUST FAULT	TO/LAND	
L (R) ENG VIBRATION FAIL	TO/LAND	
ENG SYNC/M-HOLD FAIL	TO/LAND	
EQPT RACK COOL FAULT	TO/LAND	
L (R) ESS BUS OFF	TO/LAND	
FAX RECEIVED	TO/LAND	
FD 1 (2) FAIL	TO/LAND	
FDR FAIL	TO/LAND	
FDR FAULT	TO/LAND	
FIRE SYS FAULT	TO/LAND	
FIREX BTL 1 (2) FAULT	TO/LAND	
FIREX BTL 1 (2) LOW	TO/LAND	
FLAPS RATE LOW	TO/LAND	

EICAS ADVISORY MESSAGES		
Message	Inhibits	Chapt. ref.
L (R) FUEL EJECTOR FAIL	TO/LAND	
FUEL GRAV XFLOW FAIL	TO/LAND	
L (R) FUEL PUMP ON	TO/LAND	
FUEL QUANTITY FAULT	TO/LAND	
FUEL XFER FAIL	TO/LAND	
L (R) HYD DC PUMP FAIL	TO/LAND	
L (R) HYD ENG PUMP FAIL	TO/LAND	
L (R) HYD SOV CLOSED	TO/LAND	
ICE DETECTED	TO/LAND	
ICE DETECTOR FAULT	TO/LAND	
L (R) ENG FUEL TEMP LOW	TO/LAND	
L (R) ENGINE OIL BYPASS	TO/LAND	
L (R) HYD DC PUMP FAIL	TO/LAND	
LAV CALL	TO/LAND	
L (R) MAIN BUS OFF	TO/LAND	
MANUAL PRESS FAIL	TO/LAND	
MFD X-TALK FAIL	TO/LAND	
NWS FAULT	TO/LAND	
PACK COOL AIR FAIL	TO/LAND	
L (R) PROBE HT CTLR FAIL	TO/LAND	
PROX SYS FAULT	TO/LAND	
RAM AIR FAIL	TO/LAND	
RDC FAULT	TO/LAND	
RUDDER LIMITER FAULT	TO/LAND	
SELCAL DATALINK	TO/LAND	
SELCAL HF 1 (2)	TO/LAND	
SELCAL VHF 1 (2) (3)	TO/LAND	
SPOILERS FAULT	TO/LAND	
STAB TRIM FAULT	TO/LAND	
STALL PROTECT FAULT	TO/LAND	
L (R) STALL SHAKER FAIL	TO/LAND	
STALL WARN BASIC	TO/LAND	
STBY INST BATT FAULT	TO/LAND	
TAT HEAT FAIL	TO/LAND	
TAWS BASIC FAIL	TO/LAND	
TAWS SYSTEM FAIL	TO/LAND	
TAWS TERR FAIL	TO/LAND	
TAWS TERR NOT AVAIL	TO/LAND	
TAWS WINDSHEAR FAIL	TO/LAND	
WING ANTI-ICE FAULT	TO/LAND	
WING SOURCE-XBLEED	TO/LAND	

MESSAGES (Cont)

EICAS STATUS MESSAGES		
Message	Inhibits	Chapt. ref.
AIR COND MAN TEMP ON	-	
AIR SOURCE OFF	-	
APU GEN OFF	-	7
AURAL WARN A (B) MUTED	-	3
AUTO APR OFF	-	
AUTOPILOT DISCONNECT	-	
L (R) BATT OFF	-	7
BLEED OFF	-	2
BUS TIE MAN OPEN	-	7
CARGO DOOR	TO/LAND	
DITCHING ON	-	2
EMER DEPRESS ON	-	2
L (R) ENG ANTI-ICE ON	-	
ENG ANTI-ICE ON	-	
L (R) ENG FUEL SOV CLSD	-	12
L (R) ENGINE SHUTDOWN	-	
FIRE SYS IN TEST	-	9
FIRE SYS TEST OK	-	9
FUEL BALANCED	-	12
FUEL GRAV XFLOW OPEN	-	12
L (R) FUEL PUMP OFF	-	12
L (R) FUEL PUMP ON	-	12
FUEL XFER OPEN	-	12
L (R) GEN OFF	-	7
GND SPOILERS OFF	-	10
HYD PUMP NOT AUTO	-	13

EICAS STATUS MESSAGES		
Message	Inhibits	Chapt. ref.
L (R) HYD SOV CLOSED	-	13
MANUAL PRESS ON	-	2
NWS OFF	-	
PACK ONLY	-	
PARK/EMER BRAKE ON	-	15
PASSENGER DOOR	TO/LAND	
PAX OXYGEN OFF	-	
PAX OXYGEN ON	-	2
PITCH DISCONNECT	-	2
PROBE HEAT TEST OK	-	
RAM AIR ON	-	
L (R) REVERSER INOP	-	
ROLL DISCONNECT	-	10
ROLL SPOILERS OFF	-	10
RUD LIMITER IN TEST	-	
SEC STAB TRIM ON	-	10
STAB TRIM OFF	-	10
STBY INST OFF	-	
TAWS FLAPS OFF	-	17
TAWS GS WARN OFF	-	17
TAWS TERR OFF	-	17
TRIM AIR ONLY	-	
WING ANTI-ICE ON	-	
WING/ENG ANTI-ICE ON	-	
WING SOURCE-XBLEED	-	
YAW DAMPTER OFF	-	
XBLEED OPEN	-	

MESSAGES (Cont)

MESSAGE	MESSAGE SOUND
AFT EQPT BAY DOOR	TONE
ALTITUDE ALERT	TONE
“APU FIRE”	VOICE MESSAGE
APU FIRE DET FAIL	TONE
APU FUEL SOV FAIL	TONE
APU GEN FAIL	TONE
APU GEN OVERLOAD	TONE
AUTOPILOT DISCONNECT	TONE
AUX HYD TEMP HIGH	TONE
LEFT (R) BATT FAIL	TONE
BATTERY BAY DOOR	TONE
LEFT (R) BATTERY OVERHEAT	TONE
“CABIN ALTITUDE”	VOICE MESSAGE
CARGO DOOR	TONE
CARGO SMOKE	TONE
CARGO SMOKE DET FAIL	TONE
CONFIG AILERON TRIM	VOICE MESSAGE
CONFIG AUTOPILOT	VOICE MESSAGE
CONFIG FLAPS	VOICE MESSAGE
CONFIG RUDDER TRIM	VOICE MESSAGE
CONFIG SPOILERS	VOICE MESSAGE
CONFIG STAB TRIM	VOICE MESSAGE
CPLT BRAKE FAULT	TONE
ELEC HYD GEN FAIL	TONE
ELECTRICAL FAULT	TONE
LEFT (R) ENG ANTI-ICE FAIL	TONE
LEFT (R) ENG DSPL MISCOMP	TONE
LEFT (R) ENG FUEL SOV FAIL	TONE
LEFT (R) ENG OIL PRESS HIGH	TONE
LEFT (R) ENG OIL PRESS LOW	TONE
LEFT (R) ENG OIL TEMP HIGH	TONE
LEFT (R) ENGINE EXCEEDANCE	TONE
“LEFT (RIGHT) ENGINE FIRE”	VOICE MESSAGE
LEFT (R) ENGINE FLAMEOUT	TONE
LEFT (R) ENGINE VIBRATION	TONE
ENGINES FUEL BYPASS	TONE
ELEVATOR SPLIT	TONE
EMERGENCY EXIT	TONE
EMER LIGHTS OFF	TONE
EMER LIGHTS ON	TONE
LEFT (R) ESS BUS FAIL	TONE
ESSENTIAL POWER ONLY	TONE
LEFT (R) INBD BRAKE FAIL	TONE
INBD BRAKE FAIL	TONE
INBD BRAKE PRESS LO	TONE
LEFT (R) FADEC FAIL	TONE
FIRE SYS FAULT	TONE
FIREX APU SQUIB FAIL	TONE

MESSAGE	MESSAGE SOUND
FLAPS FAIL	TONE
FLAPS FAULT	TONE
FLAPS NORM PRESS LOW	TONE
FLT SPOILERS DEPLOY	TONE
FLT SPOILERS FAIL	TONE
FLT SPOILERS FAULT	TONE
FUEL IMBALANCE	TONE
LEFT (R) FUEL COLLECTOR LOW	TONE
LEFT (R) FUEL PRESSURE LOW	TONE
LEFT (R) FUEL PUMP FAIL	TONE
FUEL QUANTITY FAIL	TONE
FUEL QUANTITY LOW	TONE
“GEAR”	VOICE MESSAGE
GEAR BAY OVHT	TONE
GEAR BAY DET FAIL	TONE
GEAR DISAGREE	TONE
GEAR SYS FAIL	TONE
LEFT (R) GEN FAIL	TONE
LEFT (R) GEN OVERLOAD	TONE
GND SPOILERS FAIL	TONE
GND SPLRS NOT ARMED	TONE
HYD PRESS LOW	TONE
LEFT (R) HYD PRESS LOW	TONE
HYD PTU FAIL	TONE
LEFT (R) HYD SOV FAIL	TONE
LEFT (R) HYD TEMP HIGH	TONE
“LEFT (RIGHT) ENGINE FIRE”	VOICE MESSAGE
LEFT (R) FIRE DET FAIL	TONE
LEFT (R) MAIN BUS FAIL	TONE
“NORMAL BRAKES FAIL”	VOICE MESSAGE
NOSE GEAR DOOR	TONE
NWS FAIL	TONE
NWS LIMIT EXCEDED	TONE
LEFT (R) OUTBD BRAKE FAIL	TONE
OUTBD BRAKE PRESS LO	TONE
OUTBD BRAKES FAIL	TONE
“OVERSPEED”	VOICE MESSAGE
PARK/EMER BRAKE ON	VOICE MESSAGE
PARK/EMER BRAKE ON	TONE
PASSENGER DOOR	TONE
PITCH DISCONNECT	VOICE MESSAGE
PK/EMER BRK PRESS LO	TONE
PLT BRAKE FAULT	TONE
PRI STAB TRIM FAIL	TONE
LEFT (R) REVERSER FAIL	TONE
LEFT (R) REVERSER UNSAFE	TONE
MACH TRIM FAIL	TONE
ROLL DISCONNECT	VOICE MESSAGE
ROLL SPOILERS FAIL	TONE

MESSAGE	MESSAGE SOUND
ROLL SPOILERS FAULT	TONE
ROLL SPOILERS OFF	TONE
RUDDER LIMITER FAIL	TONE
SEC STAB TRIM FAIL	TONE
“SELCAL DATALINK”	VOICE MESSAGE
“SELCAL HF 1 (2)”	VOICE MESSAGE
“SELCAL VHF 1 (2) (3)”	VOICE MESSAGE
SPOILERS FAIL	TONE
SPOILERS FAULT	TONE
“STALL”	VOICE MESSAGE
LEFT (R) START ABORTED	TONE
LEFT (R) STARTER FAIL	TONE
LEFT (R) STARTER FAIL ON	TONE
TRIM CLACKER	TONE
VERTICAL TRACK ALERT	TONE
WING FUEL TEMP LOW	TONE
WOW FAIL	TONE

CONTROLS AND INDICATIONS

MULTI-FUNCTION DISPLAYS (MFD)

MFD display systems information, synoptic diagrams, and CAS messages are usually displayed on the left MFD.

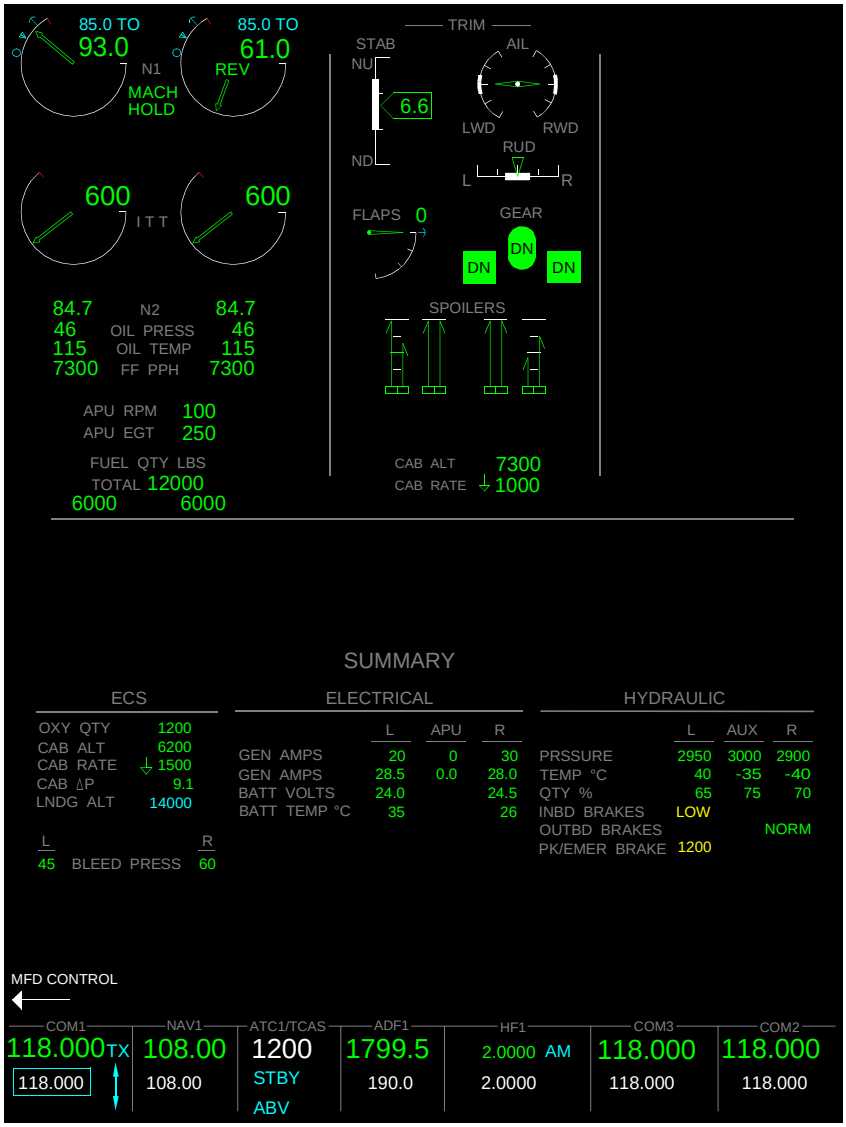

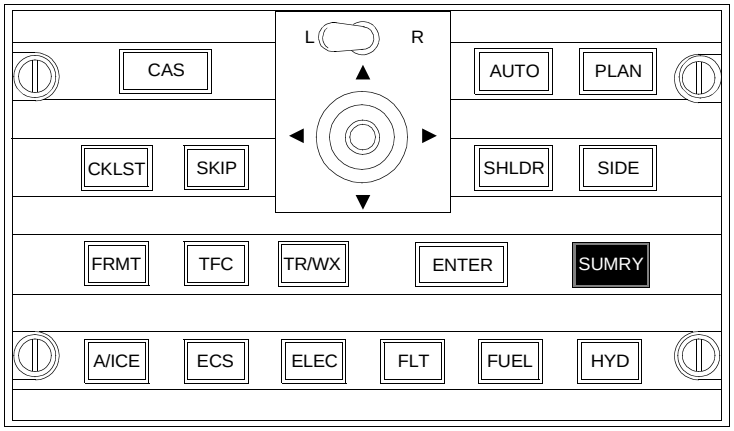

CFO0305002_008

CONTROLS AND INDICATIONS (Cont)

ANTI-ICE SYNOPTIC PAGE

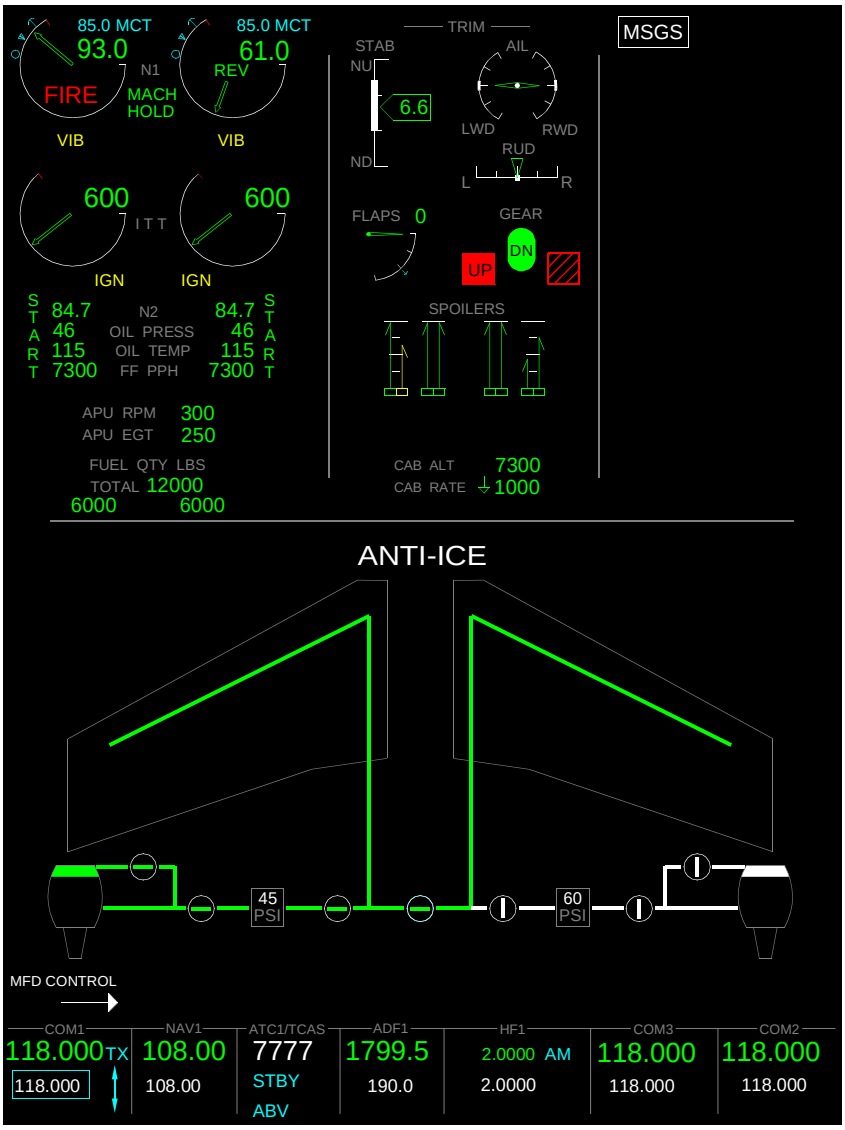

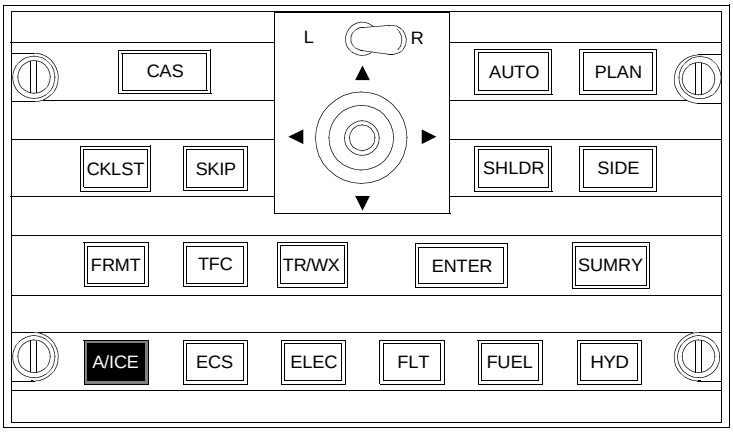

CFO0305002_009

CONTROLS AND INDICATIONS (Cont)

ECS SYNOPTIC PAGE

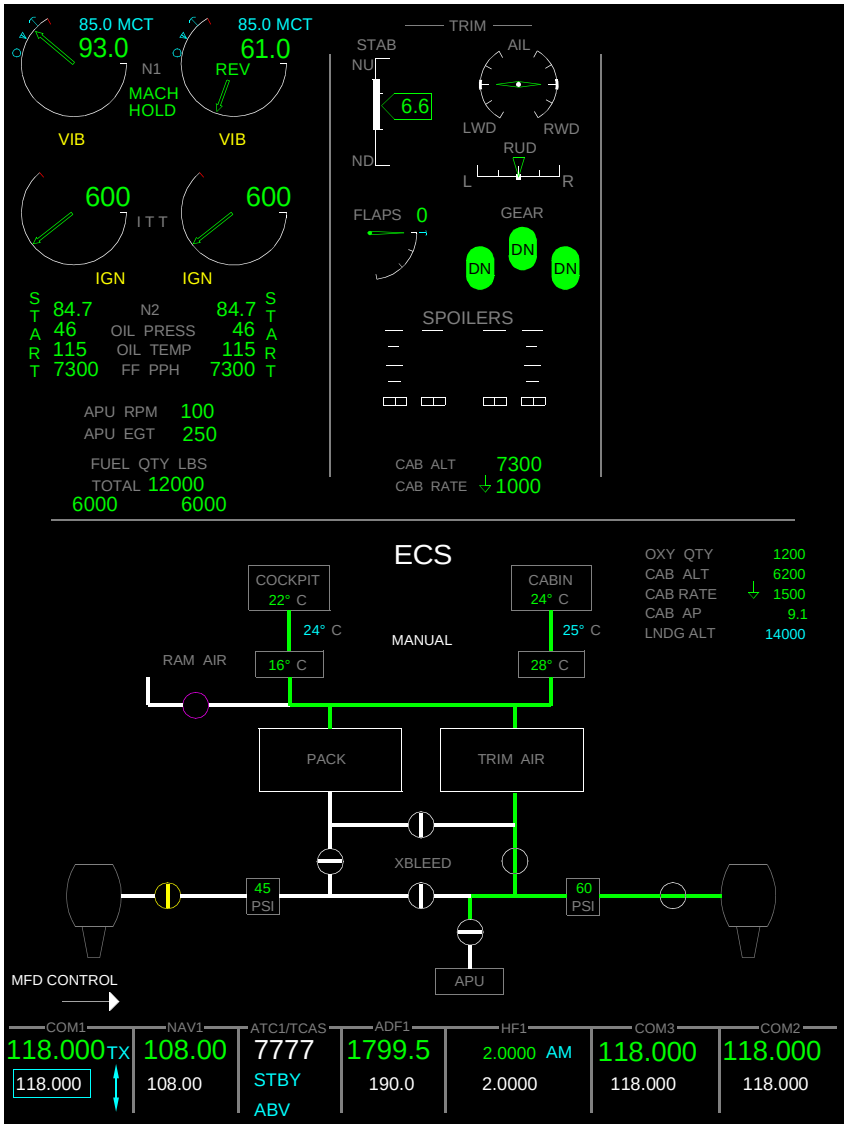

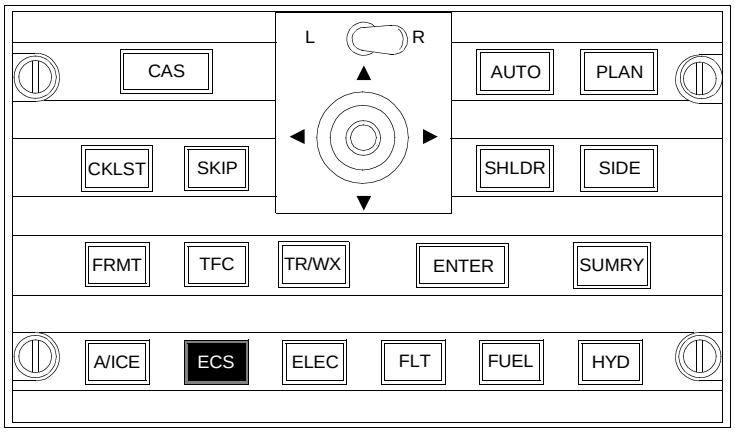

CFO0305002_010

CONTROLS AND INDICATIONS (Cont)

ELECTRICAL SYNOPTIC PAGE

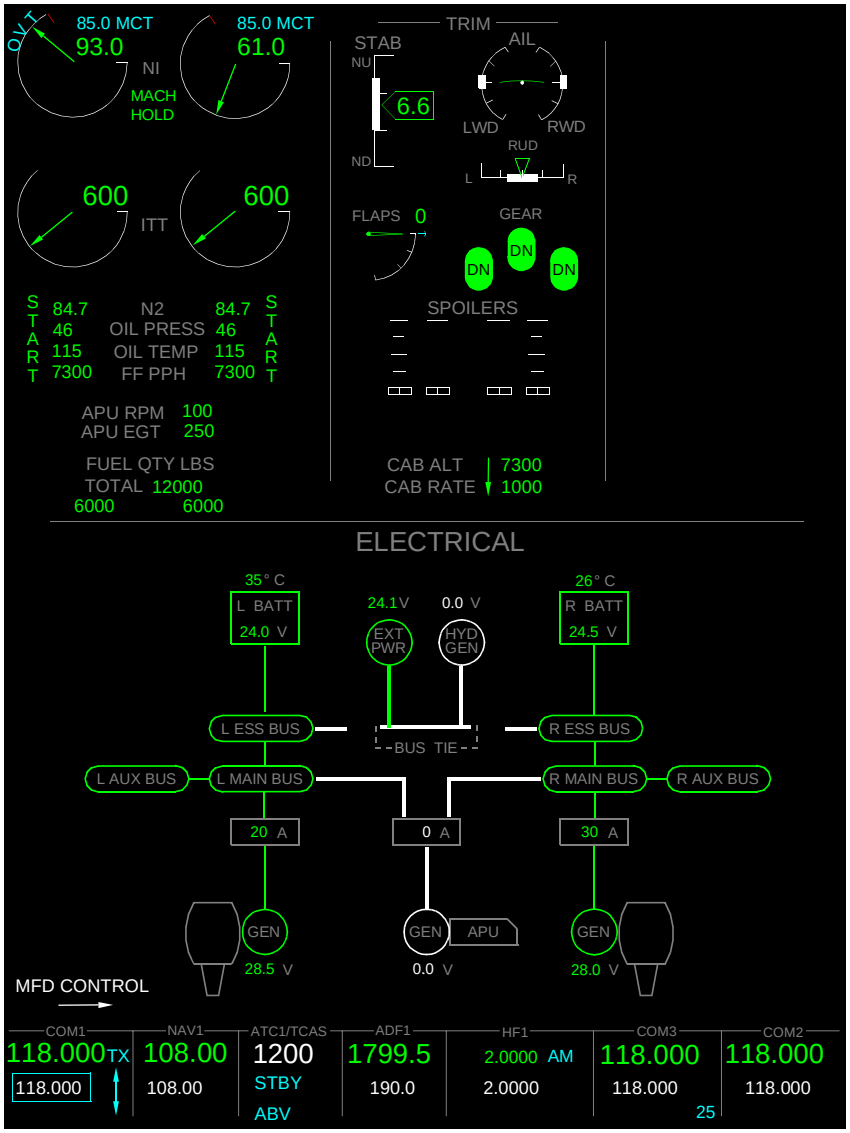

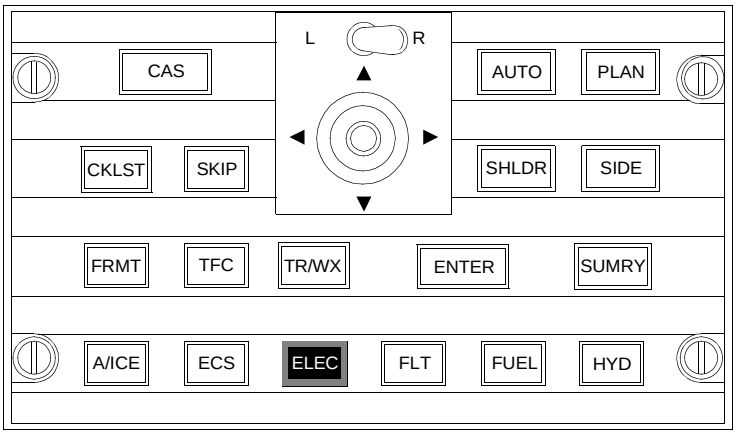

CFO0701002_007

CONTROLS AND INDICATIONS (Cont)

FLIGHT CONTROLS SYNOPTIC PAGE

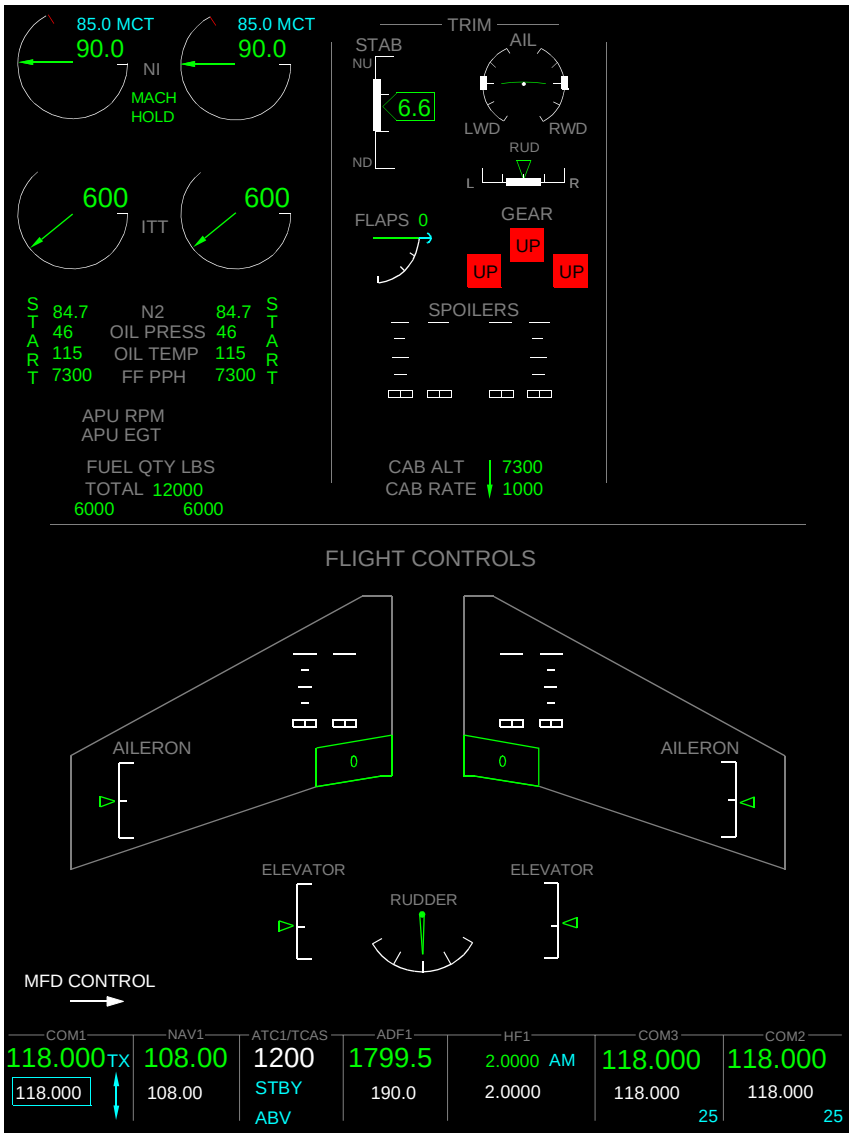

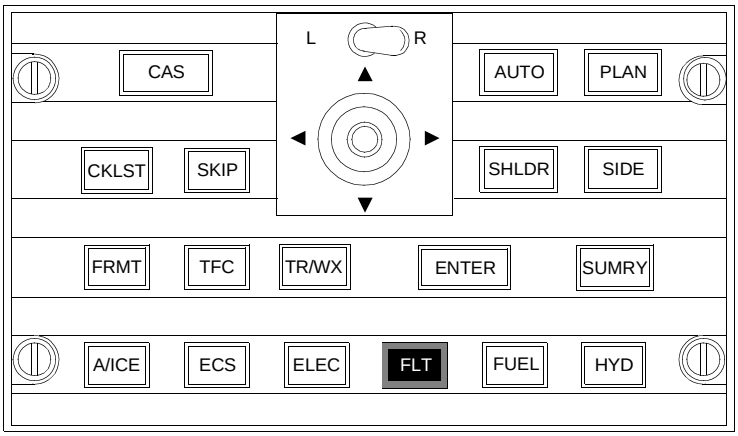

CFO305002_012

CONTROLS AND INDICATIONS (Cont)

FUEL SYNOPTIC PAGE

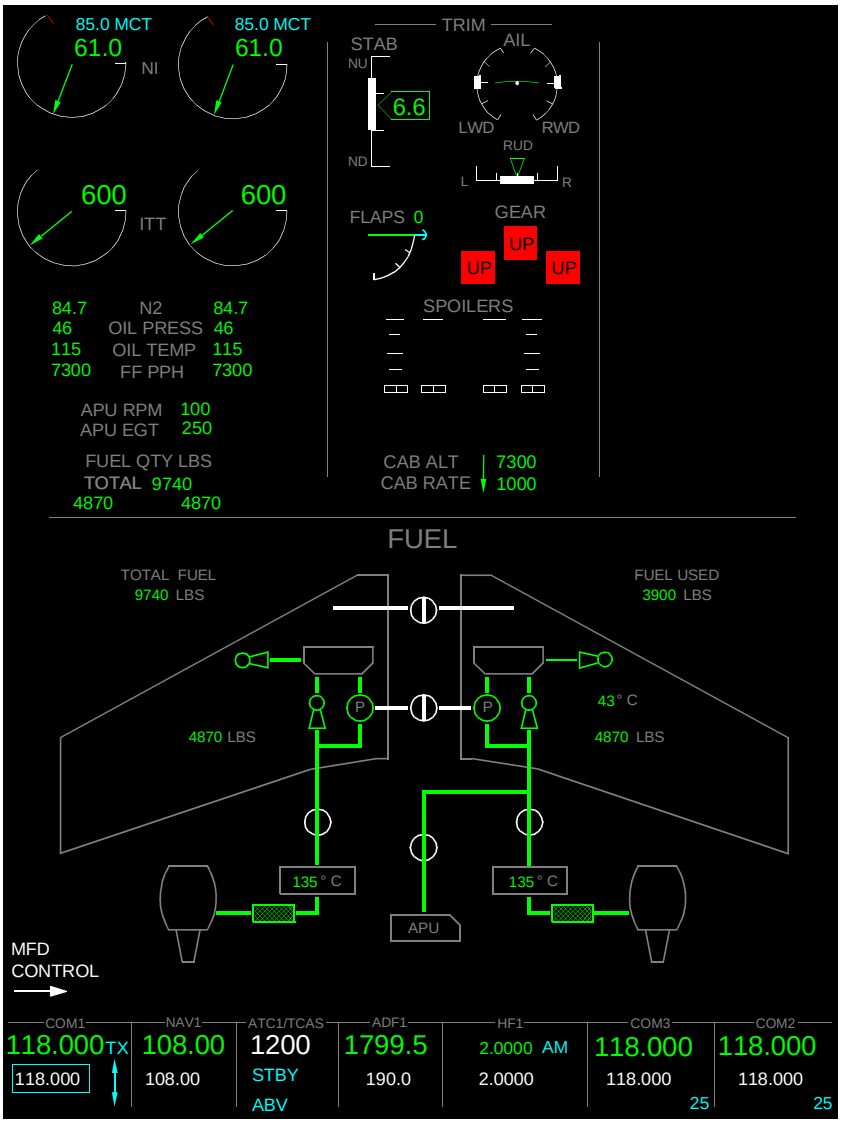

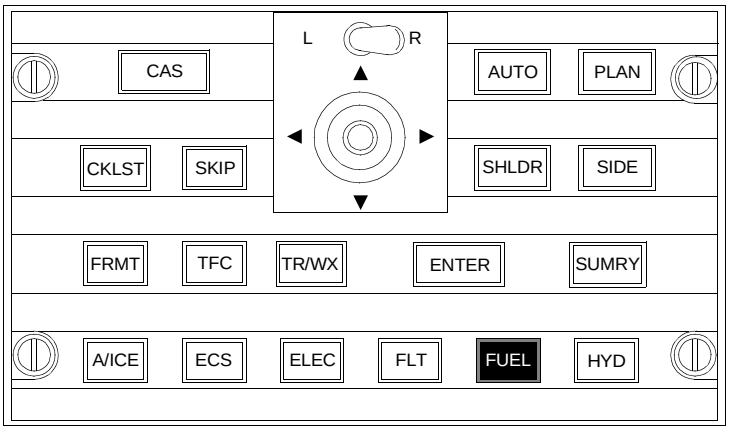

CFO0305002_013

CONTROLS AND INDICATIONS (Cont)

HYDRAULIC SYNOPTIC PAGE

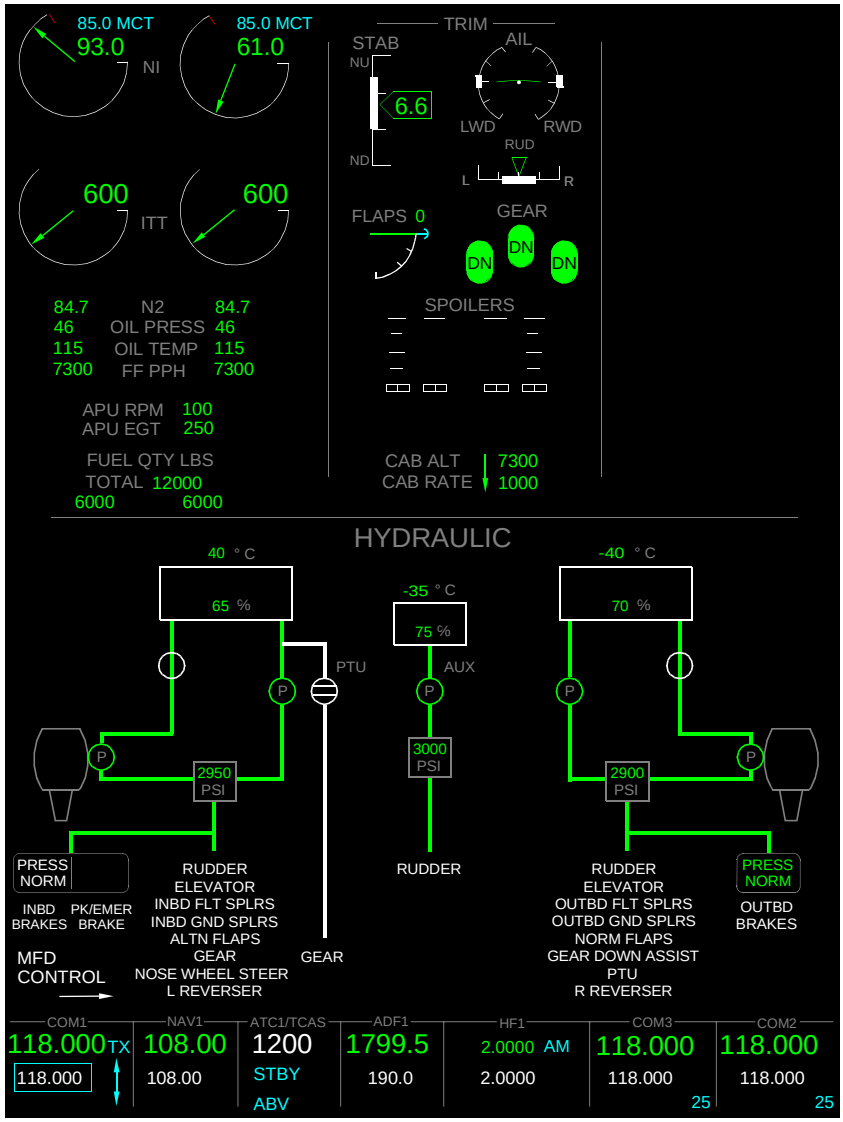

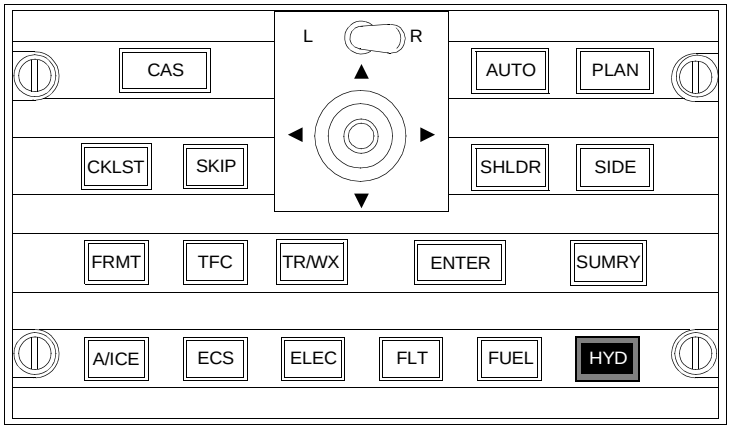

CFO030500 2_014

EICAS MESSAGES

The engine indicating and crew alerting system messages are shown on the EICAS. In the table below, a brief explanation for each message is provided.

MESSAGE	INHIBITS	MEANING	AURAL WARNING
EFIS COMPARATOR INOP	TO/LAND	EFIS comparator unable to compare one or more of the following parameters: altitude, airspeed, roll attitude, pitch attitude, heading, radio altitude, flight director, localizer or glideslope	
EFIS MISCOMPARE		There is a mismatch between the onside and cross-side data and accompanied by a PFD annunciation ALT, IAS, ROL, PIT, HDG, LOC, GS, RA, or FD	
L (R) IAPS FAIL	TO/LAND	The respective Integrated Avionics Processing System has failed	
PFD X-TALK FAIL	TO/LAND	Communication between the PFDs has failed. REFs menu pages 1, 2 and 3 are not synchronized. The EFIS comparator will be inoperative and is unable to compare one or more of the following parameters: altitude, airspeed, roll attitude, pitch attitude, heading, radio altitude, flight director, localizer or glideslope	
DCU FAULT	TO/LAND	Channel A or B in the DCU failed.The yaw damper may fail. The rudder travel limiter monitoring may be inoperative	
MFD X-TALK FAIL	TO/LAND	Communication between the MFDs has failed, and cross side tuning will not be available	
RDC FAN FAIL	TO/LAND	Channel A or B of the remote data concentrator has failed	
RDC FAULT	TO/LAND	RDC channel A or B failed with no loss of functionality.	
AURAL WARN A (B) MUTED		The respective AURAL WARNING DCU A or DCU B switch has been selected, muting all warnings through that channel	

Table of Contents

Introduction 04-01-01
Flight Directors (FD) 04-01-02
Description 04-01-02
Components and Operation 04-01-02
Flight Director Command Bars 04-01-02
Cross-Pointer Command Bars 04-01-03
Flight Guidance Mode Display Area 04-01-03
Flight Guidance Panel (FGP) 04-01-04
Flight Director Synchronization 04-01-06
Flight Director Lateral Modes 04-01-07
Flight Director Vertical Modes 04-01-13
Autopilot 04-01-21
Components and Operation 04-01-21
Description 04-01-21
Autopilot Engagement 04-01-21
Autopilot Servo Motors 04-01-21
Out-Of-Trim Indicators 04-21-23
Master Disconnect Switch 04-01-23
Autopilot and Yaw Damper Disconnect Lever 04-01-23
Autopilot Disengagement 04-01-23
Autopilot Takeoff Configuration Warning 04-01-23
Yaw Damper 04-01-23
Description 04-01-23
Controls and Indications 01-01-24
Description 01-01-24
PFD Messages 04-01-25
EICAS Messages 04-01-27

INTRODUCTION

The automatic flight control system (AFCS) provides a means of automatically controlling the aircraft flight path. The AFCS reduces the flight crew workload by providing steering commands through the flight director or automatically flying the aircraft through the autopilot. The main functions of the AFCS are:

- Dual independent flight directors
- Two axis (pitch and roll) autopilot
- Single axis yaw damper

When manually flying the airplane, dual flight directors provide steering commands to the pilots through flight director command bars displayed on the primary flight displays. For automatic flight control, the flight director steering commands are coupled to the autopilot.

FLIGHT DIRECTORS (FD)

DESCRIPTION

The flight directors display flight guidance cues on the attitude indicators, thereby assisting the flight crew in maintaining a specified flight path. The flight guidance cues are displayed in the form of flight director command bars. The crew can choose to hand fly the aircraft with "raw data" (flight directors not displayed), hand fly the aircraft using the flight director command bars, or couple the autopilot to the flight director.

COMPONENTS AND OPERATION

The flight director (and autopilot and yaw damper) processing is done within two flight guidance computer cards in the integrated avionics processor system (IAPS). The left and right flight guidance computer cards are identical. During precision approach and go-around modes, each flight director provides guidance to the onside displays. In all other flight director modes, only one flight director provides guidance to both left and right flight displays.

The pilot flying can select the onside flight director using the transfer (XFR) button on the flight guidance panel.

If the active flight director fails, a red boxed FD appears on the primary flight display and a cyan FD1(2) FAIL CAS message is displayed. Selecting the XFR switch on the FGP deselects the failed flight director and allows the functional flight director to become active.

FLIGHT DIRECTOR COMMAND BARS

The flight directors provide visual pitch and roll control guidance by means of single cue inverted V-shaped command bars, or cross-pointer command bars. The selection of the preferred display of command bars is made by pushing the REF button to show page 3/3 on the PFD. The flight director command bars provide visual guidance to the pilot regardless of the autopilot engagement mode.

SINGLE CUE COMMAND BARS

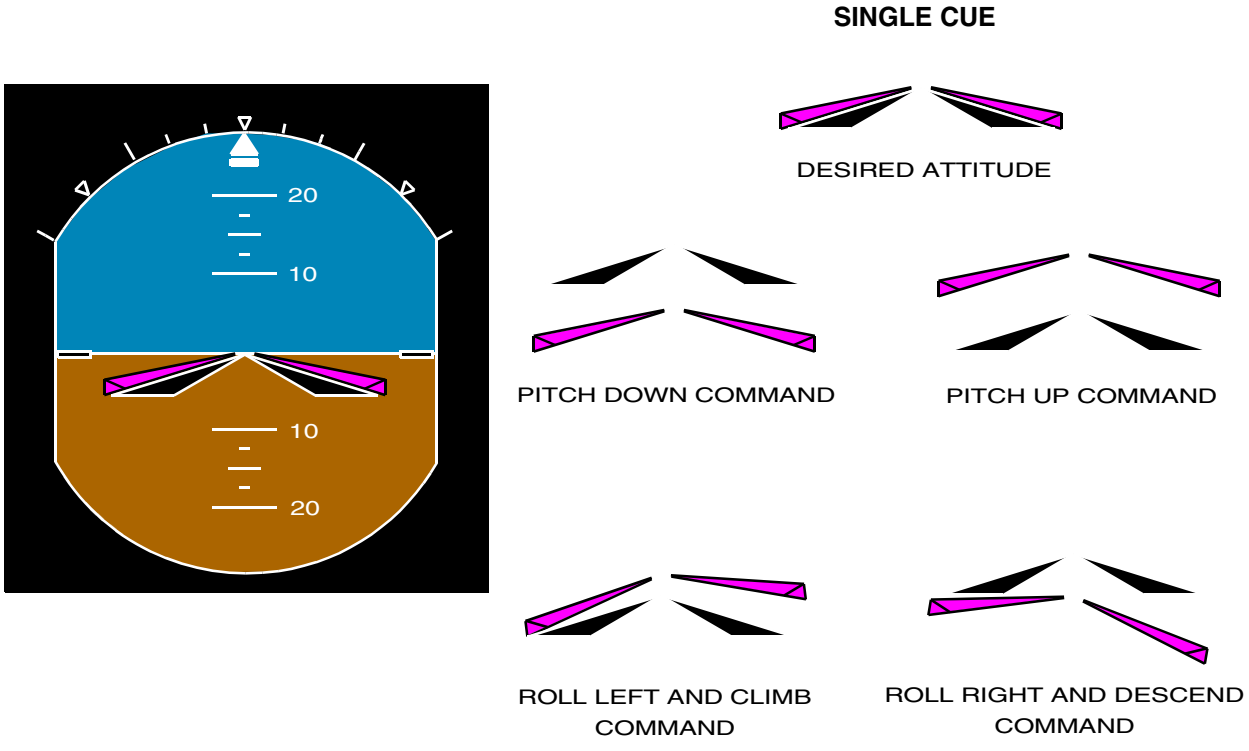

FLIGHT DIRECTORS (FD) (Cont)

CROSS-POINTER COMMAND BARS

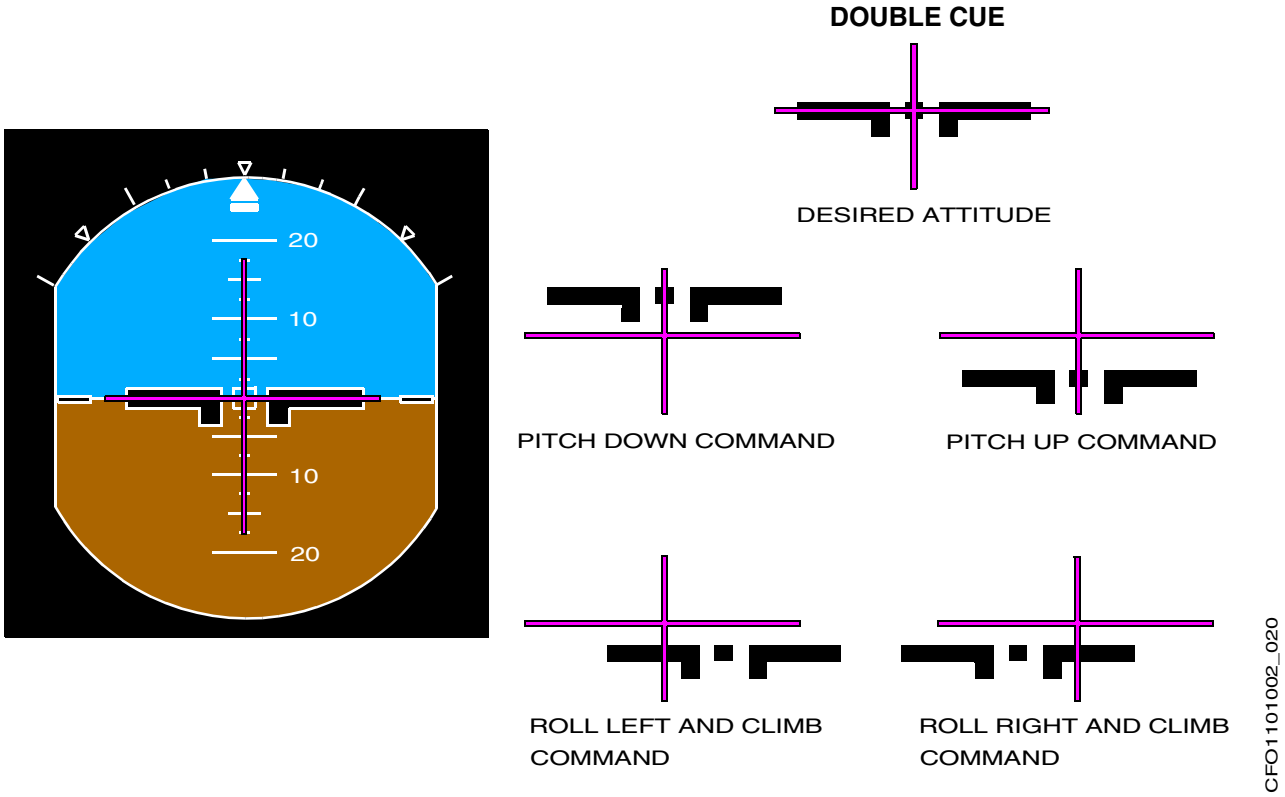

FLIGHT GUIDANCE MODE DISPLAY AREA

Lateral and vertical FD modes are presented in the flight mode annunciator display on each PFD. The flight guidance mode display area is located above the attitude indicator.

The mode display area is divided into three sections, separated by two gray vertical lines. The left section displays lateral modes. The center section displays the autopilot, yaw damper, and active flight director status. The right section displays vertical modes. Active modes are displayed in green on the top line and armed modes are displayed in white on the bottom line.

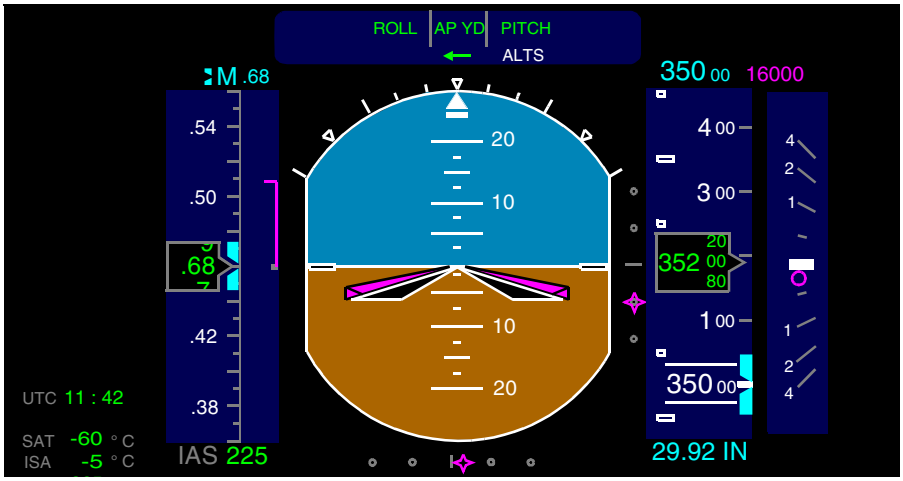

FLIGHT GUIDANCE PANEL (FGP)

The FGP is the mode selection panel that selects and controls the flight director, autopilot, and yaw damper functions. The FGP is located on the glare shield and is accessible to both pilots. The FGP is divided by the functional areas they perform. Those fuctional areas are:

- Flight director/course
- Lateral modes
- Vertical modes
- Autopilot

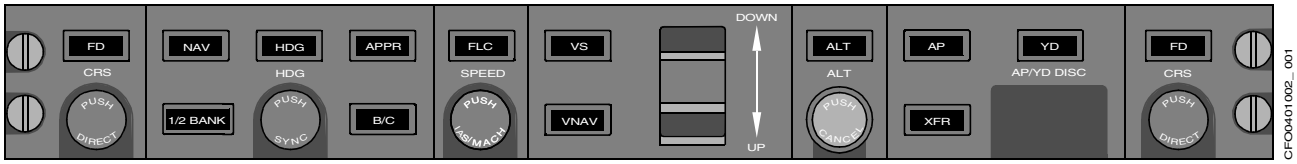

The flight guidance panel controls are as follows:

FD button — The FD 1 and 2 buttons are used to select and deselect the onside flight director. The flight director is the lateral and vertical steering commands and the text messages representing the selected modes. Push the FD button to select the onside flight director. When the flight director is activated using the FD button, the basic modes pitch and roll are automatically selected. With the FD active, push the FD button to deselect the flight director. With the autopilot engaged and the flight director showing, deselection of the flight director using the FD button removes the steering commands and not the text messages, however, the flight director continues to supply steering commands to the autopilot.

CRS knob — A course set knob (CRS) is located at each end of the FGP. These knobs individually set the courses on the left and right PFD HSI displays. The CRS knob primarily set the course for a VOR radial or LOC course. The course knobs have a push button in the center to synchronize the display to the aircraft “direct-to” course.

NAV (navigation) button — Pressing the NAV button alternately selects and deselects the navigation mode. The NAV mode normally intercepts route segments identified with VOR radials and intercepts and flies desired FMS tracks.

HDG button and knob— Pressing the HDG button engages the heading mode and displays a green HDG annunciation on the PFDs. The heading button controls the heading bug and digital display. Pressing the push button in the center of the HDG knob synchronizes the HDG bug on all display units to the aircraft current heading. The flight director command bars command a turn in the direction the heading bug was moved to achieve the set heading.

APPR (approach) button — The APPR mode is used for all approaches, regardless of NAV source or whether a vertical mode is also associated with the approach. Pressing the APPR button arms both localizer and glideslope modes and is normally used to select lateral and vertical steering for ILS and FMS. The VOR approach mode is selected by pressing the APPR mode button with the navigation receiver tuned to a VOR frequency and selected as the active nav source. When the navigation receiver is tuned to an ILS frequency, ILS is selected as the active navigation source. Selection of APPR mode when the NAV source is FMS engages the FMS lateral mode the same as described for NAV, and also arms VNAV for approach.

B/C button — The back course button is used to alternately select and deselect the back course mode for flying a localizer back course approach.

1/2 BANK button — Pressing this button alternately selects or deselects a reduced maximum bank angle of 15° (for all lateral modes, except roll) on both FDs. When selected, a green 1/2 bank arc appears on the top of the attitude direction indicators.

FLC (flight level change) button — Depressing the FLC button engages the flight level change mode, which sycronizes on engagement to the current airspeed/mach. The speed reference can then be changed with the SPEED knob. Pushing the FLC switch again disengages the mode.

FLIGHT GUIDANCE PANEL (FGP) (Cont)

SPEED knob — The rotary SPEED knob changes the IAS/Mach speed reference (FLC mode). The speed knob changes the bug airspeed or Mach at any time. The integral PUSH IAS/MACH button within the SPEED knob toggles the airspeed tape between IAS and Mach. The master flight director computes the airspeed reference, and the slave flight director synchronizes to this reference.

VS button — The VS switch selects vertical speed mode. When activated, the system maintains the vertical speed reference. The vertical speed reference is set to the current vertical speed at the time of mode selection. After mode selection, rotation of the DOWN/UP wheel slews the vertical speed reference in the direction of knob rotation. Range is ±8000 fpm.

VNAV (vertical navigation) button — Pressing the VNAV button arms and then captures the FMS pitch steering commands of the FDs if FMS is selected as the NAV source, the FMS is programmed for a vertical navigation profile, the altitude preselector is set below existing altitude, and the aircraft is within the TOD (top of descent) window or above the existing altitude for VNAV climb (i.e. VFLC).

ALT (altitude hold) button — Altitude hold may be engaged by depressing the ALT button on the FGP. When ALT engages, the FD holds the existing altitude at the time the ALT button was pushed except during a precision approach with the glideslope captured.

ALT (altitude select) knob — A preselected altitude is set via the ALT rotary knob. The altitude preselect mode provides a means for FD/AP to climb or descend to a preselected altitude and then level off and maintain the preselected altitude. If an altitude deviation (±200 ft) has occurred, the altitude preselect digits will turn amber and flash, press the PUSH CANCEL button in the center of the ALT knob to cancel the flashing. The digits will then revert to cyan.

AP (autopilot) button — Pressing this button engages the autopilot. Pressing a second time disengages the autopilot.

YD (yaw damper) button — Pressing this button engages yaw damper. The YD can be engaged independently of the autopilot, but the autopilot system does not engage without the YD.

XFR (transfer) button — Selects the desired flight director (left or right) to command the autopilot.

FLIGHT DIRECTOR SYNCHRONIZATION

Flight director synchronization is selected by pushing the AP/FD sync button, located on the side of each control wheel, while in operational mode, which enables FD synchronization selection. FD synchronization selection is enabled while in roll, lateral GA, pitch, vertical TO, altitude hold, vertical speed, flight level change and vertical GA modes.

FD synchronization is deselected when the AP/FD button is released, and no vertical or lateral mode is active that has a synchronization reference, a lateral or vertical mode switch is pressed, or the FD is off.

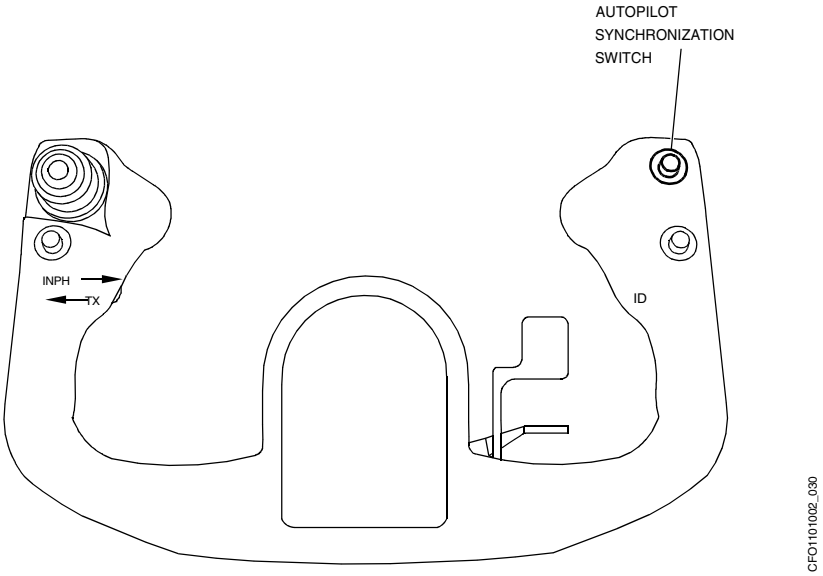

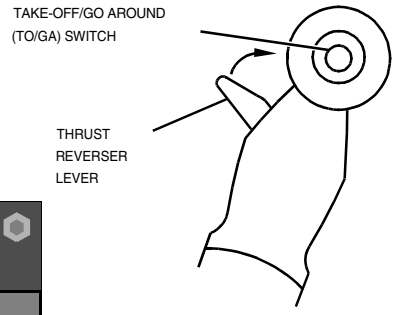

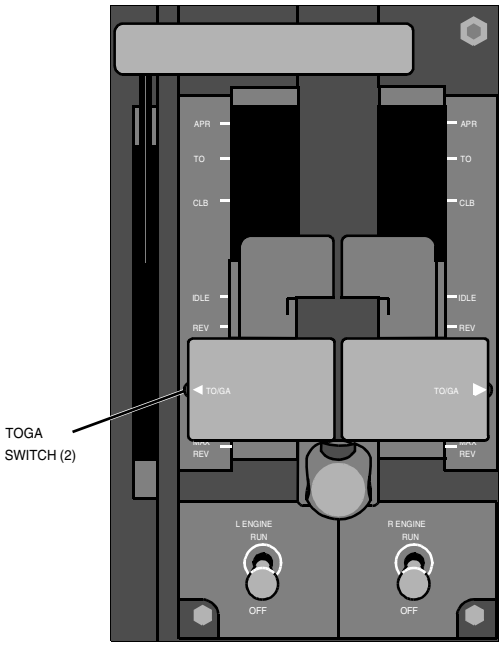

FLIGHT DIRECTOR LATERAL MODES

There are eight lateral FD modes.

- ROLL
- TO (takeoff)
- HDG (heading)
- NAV (navigation, i.e. FMS, VOR)
- GA (go-around)
- APPR (approach)
- BC (back course)
- 1/2 BNK (half bank)

Lateral modes are armed or activated by push buttons on the flight guidance panel or the thrust levers. Disabling the active lateral mode is accomplished by re-selecting the active FGP push button or by selecting another lateral mode.

ROLL MODE

Roll mode is the default lateral mode of the flight director. When the autopilot is engaged and no other lateral mode is selected, the flight director automatically defaults to the basic ROLL mode. Roll mode generates commands to hold the existing heading when the mode is selected unless the roll angle is over 5°. In that case, commands are generated to hold the roll angle present at the time of mode selection. The roll mode reference is reset to the current heading, or the current roll angle upon autopilot engagement or flight director synchronization.

The FD automatically defaults to the basic ROLL mode when NAV mode is being used and the navigation source is lost. ROLL mode is annunciated by a green ROLL in the active lateral field of the PFD.

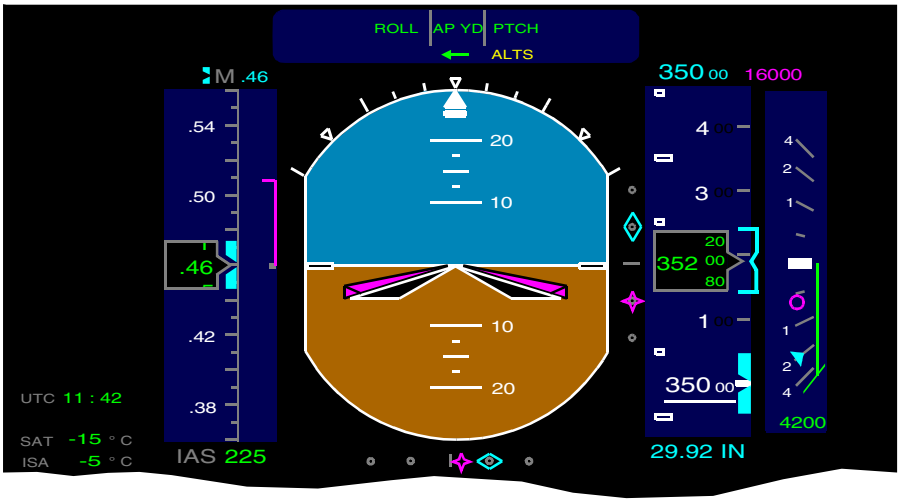

CFO0401002_006

FLIGHT DIRECTOR LATERAL MODES (Cont)

LATERAL TAKEOFF MODE

Pushing one of the TO/GA switches, prior to the start of the takeoff roll, activates the lateral and vertical takeoff modes. However, a takeoff flap setting is required to get proper takeoff mode display.

The lateral takeoff mode generates a heading hold command once airborne. The heading hold is based upon the actual aircraft heading at the moment of weight-off-wheels. The mode has a 5° bank angle authority. Lateral takeoff mode is annunciated by a green TO in the active lateral field of the PFD.

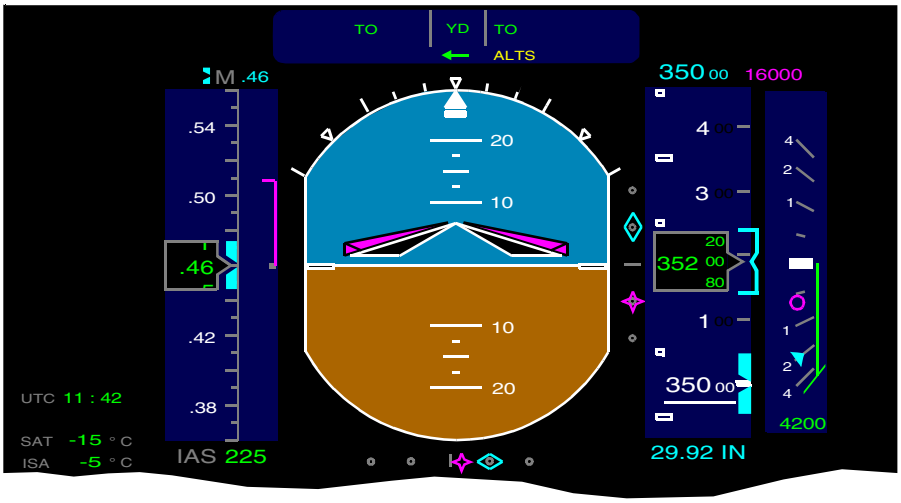

CFO0401002_014

HEADING MODE

The HDG switch and knob generate commands to capture and maintain a pilot selected heading. Selected headings are displayed by a digital heading readout and heading bug on the PFD.

Heading mode is selected by pushing the HDG push button on the FGP. The HDG knob is used to change the selected heading command. Pressing the push button in the center of the knob resets the heading bug and digital readout to the current aircraft heading.

Heading mode is indicated by a green HDG in the active lateral field of the PFD.

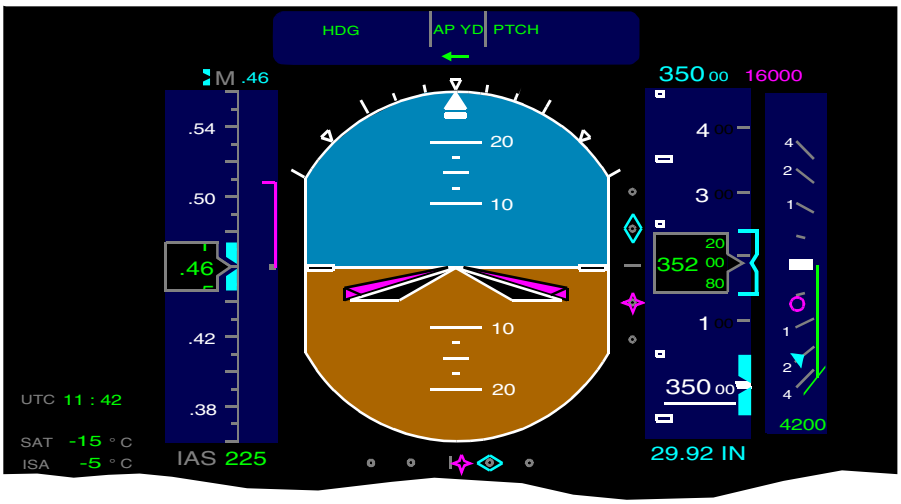

CFO0401002_007

FLIGHT DIRECTOR LATERAL MODES (Cont)

NAV MODE

This mode is activated by pushing the (NAV) switch on the FGP, and it can be deselected in one of the following ways:

- Pushing NAV switch again
- Selecting another lateral mode
- Changing the frequency of the onside navigation signal
- Changing the NAV source
- Turning off the flight directors with the AP disengaged
- Changing coupled side

Navigation mode generates commands to capture and track the active navigation source, displayed on the PFD. Navigation mode arms when it is selected, but it cannot capture if the FGC is not receiving valid navigation data.

The following are navigation submodes:

- FMS navigation mode
- VOR navigation mode
- LOC and backcourse mode

Prior to capture, the flight director operates in heading mode. The capture point is a function of closure rate. Navigation capture clears the heading select mode. A localizer capture also clears the half bank mode.

Dead reckoning operation is executed during the VOR station passage.

When navigation mode is selected, the active lateral mode is annunciated on the PFD by the green HDG (in lateral capture field) and the armed navigation is annunciated in and a white Nav source identifier (VOR1, VOR2, LOC1, LOC2, FMS1, FMS2 in the lateral arm field). Navigation mode capture/tracking is annunciated on the PFD with a green message in the lateral capture field, which identifies the navigation source (VOR1, VOR2, LOC1, LOC2, FMS1, FMS2). Dead reckoning operation is annunciated on the PFD by a small green DR letters, added to the lateral nav capture annunciation.

The flight director provides a NAV to NAV capture logic that allows automatic transition from FMS navigation to LOC or back course mode, when FMS is the selected NAV source.

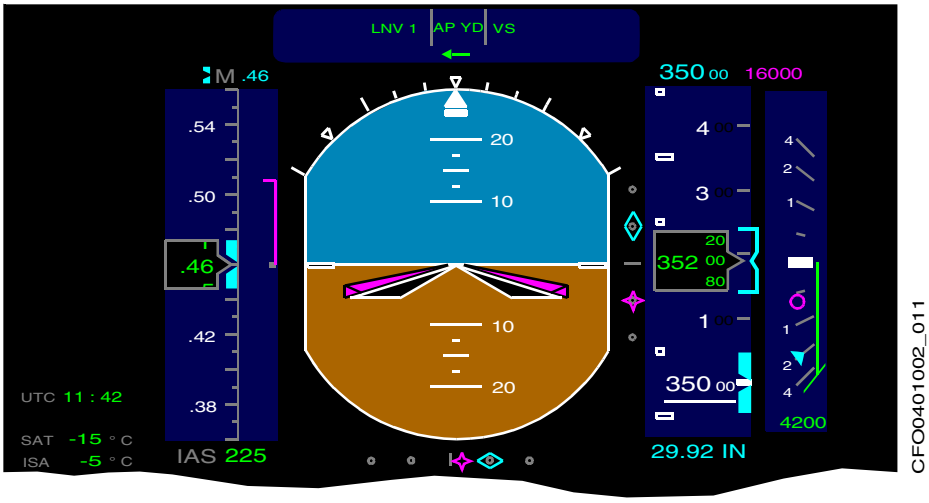

FLIGHT DIRECTOR LATERAL MODES (Cont)

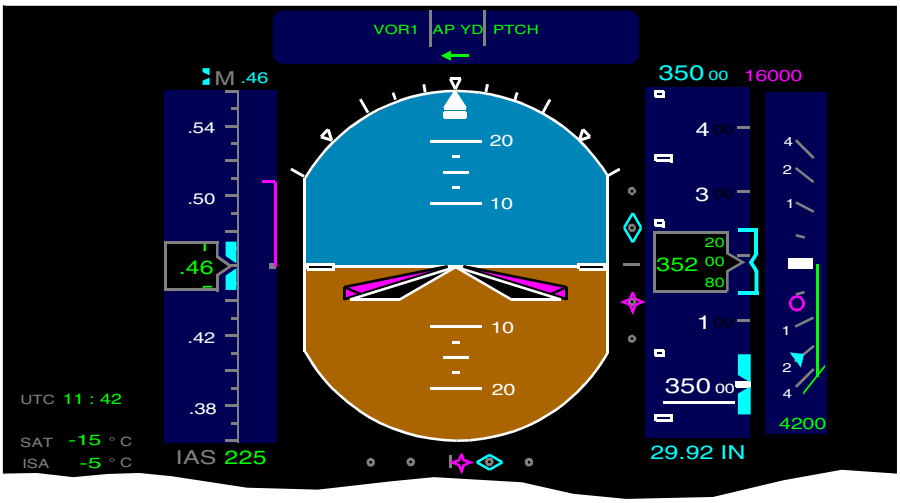

GO AROUND MODE

When airborne, pressing either TOGA switch activates the lateral and vertical go-around modes. Lateral go-around mode generates a heading hold command with a five degree bank angle authority. Lateral go-around is annunciated with a green GA message in the lateral capture field of the PFD.

Pushing the TOGA switch disengages the autopilot. The resultant autopilot warning may be cancelled by another push of the TOGA switch or by pushing the MWS switch on the control wheel.

GA is deselected if the following occurs:

- Autopilot engagement.
- Another lateral or vertical mode is selected.
- Pressing the SYNC button, which selects pitch and roll modes.
- Turning off the Flight Directors.
- Changing the coupled side.

Selection of GA causes the flight directors to operate independently. Selection of GA mode disengages the autopilot (but not the Yaw Damper), and clears all other existing modes.

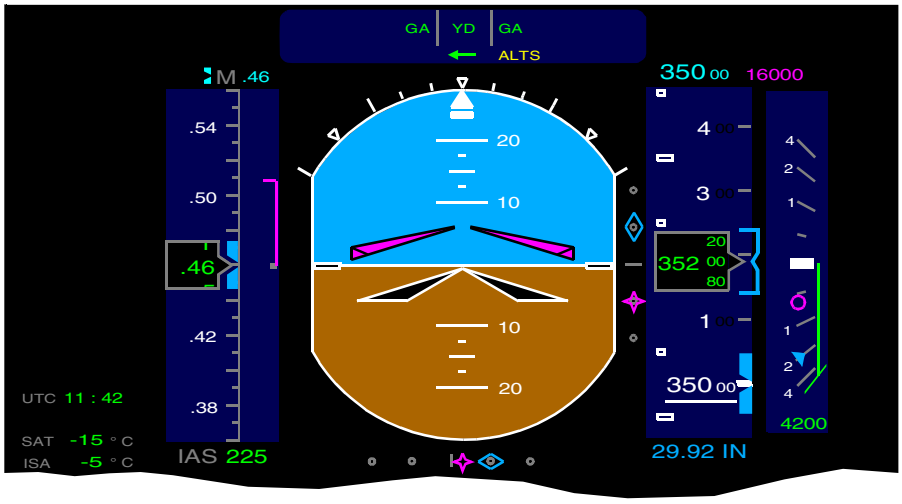

FLIGHT DIRECTOR LATERAL MODES (Cont)

APPR MODE

The approach mode is selected by pressing the APPR button on the FGP. In this mode, the flight director generates commands to capture and track lateral guidance for localizer, VOR, and FMS approaches. The approach mode can be cleared in one of the following ways:

- Pushing APPR button again
- Selecting another lateral mode
- Changing the frequency of the onside navigation signal
- Changing the onside navigation source
- Turning off the Flight Directors with autopilot disengaged and APPR as the active lateral mode
- Change the coupled side when APPR mode is active

The lateral approach mode generates commands to capture and track the signal from the navigation source displayed on PFD. The approach mode can be selected, but it will not capture until the onside PFD's active nav source is valid and capture criteria has been met (except for FMS). Selection of an approach mode arms each FGC's lateral guidance to the onside nav source. The capture point is independently determined for each FGC.

1/2 Bank mode is automatically deselected when APPR mode is selected.

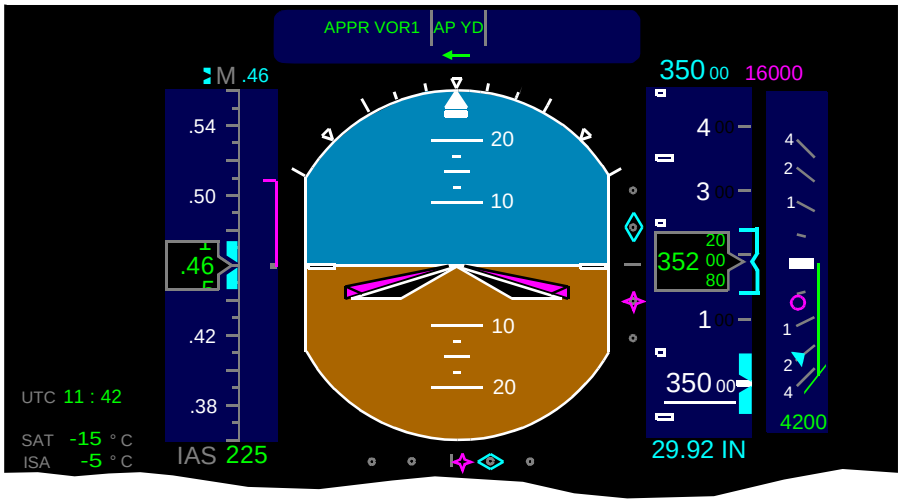

CFO0401002_012

FLIGHT DIRECTOR LATERAL MODES (Cont)

B/C MODE

The localizer/back course mode can be selected by pushing the B/C button on the FGP. Back course mode can be deselected in one of the following ways:

- Pressing the B/C button again
- Selecting another lateral mode
- Changing the frequency of the navigation signal
- Changing the preselect navigation source (other than changing to localizer)

Back course mode generates the command to capture and track the back course signal from the selected LOC source, displayed on the PFD. Upon back course mode selection, the flight director will arm to capture the signal from the selected nav source. If the flight director is in nav mode capturing/tracking FMS (with the LOC as preselect source) it will continue to track FMS and arm for LOC capture.

Back course capture clears half bank and heading modes. Back course mode is annunciated on the PFD with two messages: green in the lateral capture field indicating captured NAV source and also green in the lateral arm field, which identifies the armed NAV source (B/C1 or B/C2).

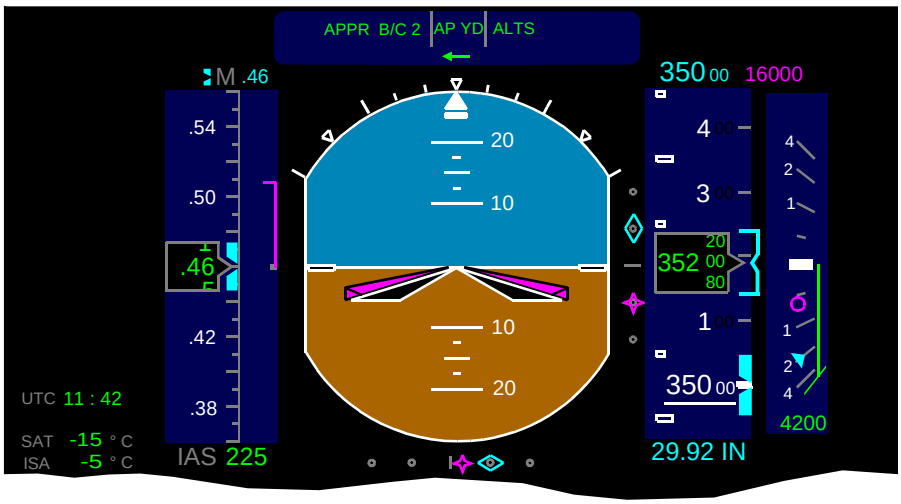

CFO0401002_013

FLIGHT DIRECTOR LATERAL MODES (Cont)

1/2 BANK MODE

Half bank mode can be manually selected by pushing the 1/2 BANK button on the FGP except when any of the following modes is active; Approach Capture or Track, NAV Capture or Track in LOC or GA. It will be automatically selected when climbing through 31 600 ft. pressure altitude (the half bank transition altitude) or if the aircraft is above that altitude when the flight director is turned on. This mode selection is inhibited when the aircraft is in takeoff mode, go around mode, approach mode capture or localizer capture.

The Half Bank Mode is manually cleared by pushing the 1/2 BANK button again. This mode is automatically cleared when descending through the half bank transition altitude, by takeoff mode, by go-around mode, by approach capture or any localizer capture.

The Half Bank Mode reduces the maximum commanded bank angle to 15°. Half Bank Mode has no effect on roll mode operation. Half Bank Mode is annunciated by a green arc drawn above the roll scale index marks on the PFD. The length of the mark represents +/- 15° of roll.

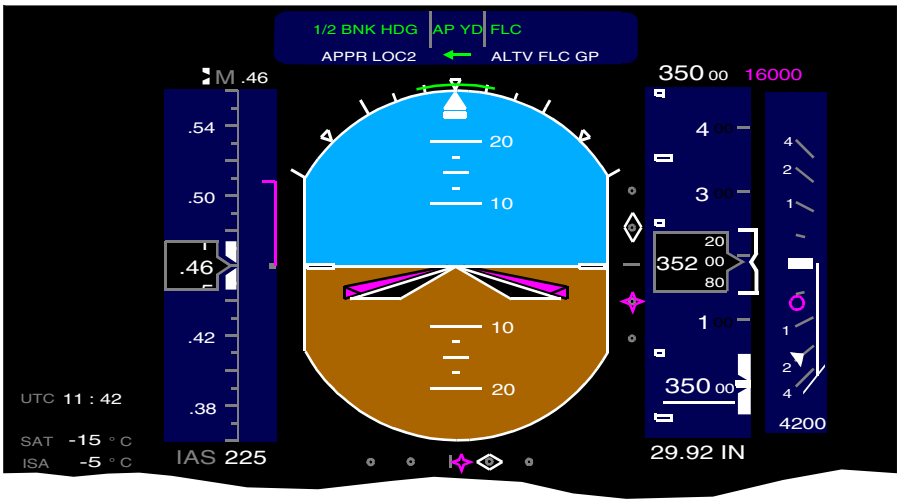

FLIGHT DIRECTOR VERTICAL MODES

There are 10 vertical flight director modes.

- Pitch (PTCH)
- Altitude preselect (ALTS)/Altitude hold (ALT)
- Takeoff (TO)
- Overspeed
- Vertical Navigation (VNAV)
- Glidepath (GP)
- FLC
- Vertical speed (VS)
- Glideslope (GS)
- Go-around (GA)

Vertical modes are armed or activated by switches or a UP/DOWN wheel on the flight guidance panel or TOGA switches on the thrust levers. Disabling the active vertical mode is accomplished by pushing the active FGP push button or by selecting another vertical mode.

FLIGHT DIRECTOR VERTICAL MODES (Cont)

PITCH MODE

When pitch mode is selected, the flight director generates commands to hold the current pitch attitude. Selection of the Pitch Mode is automatic in the following cases:

- Any other vertical mode has been deselected, either manually or automatically
- Autopilot is engaged with the FD off
- Flight Director is ON with no other vertical mode(s) selected
- The SYNC button is pressed in go-around mode
- Go-around is active mode and another lateral mode is selected
- While the AP is engaged or FD is ON, the coupled side is changed
- The pre-select altitude is changed during the pre-select altitude capture
- The FGP UP/DOWN wheel is moved (except in: VS Mode, Vertical Glide path, Capture or Track, or Overspeed function)
- If VNAV has been selected, the FMS may select the pitch hold mode
- Deselecting VNAV when GP, PATH or FCS ALTS are the active modes with flight plan target altitude as the active reference

The pitch mode is deselected when selection or automatic capture of another active vertical mode occurs. The pitch reference value can be changed by using the UP/DOWN wheel on the FGP. Rotation of the VS/pitch wheel changes the pitch reference by 0.5°/click. The pitch reference is reset to the current pitch attitude, upon either AP engagement, transferring to pitch mode, or FD sync. When in altitude select capture, rotating the VS/pitch wheel also re-arms altitude select mode.

When capturing or tracking a preselected altitude, a new preselect altitude must be chosen prior to selection of pitch mode, to avoid an immediate recapture of the existing preselected altitude.

Pitch Mode is annunciated by PTCH in green in the vertical capture field.

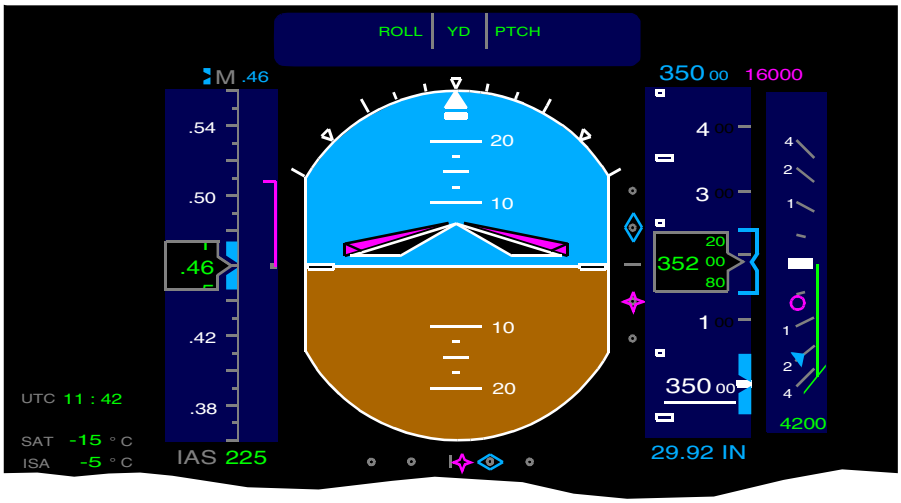

FLIGHT DIRECTOR VERTICAL MODES (Cont)

ALTITUDE SELECT (ALTS)

The altitude select mode consists of arm, capture and track states. In the arm state, the FGC monitors aircraft closure rates towards the target altitude and determines the optimum capture point. The capture state performs calculations for a smooth acquisition of the target altitude. In the track state, the system maintains the target altitude. There are two possible target altitudes for ALTS operation:

- Preselect Altitude value – Manually selected by the pilot using the ALT switch on the FGP
- FMS flight plan target altitude provided by the FMS

The ALTS mode will capture and track the altitude that is closest in the direction the aircraft is headed. This mode is automatically selected (no button for manual selection is provided) upon existence of any mode (FD is selected on, or AP is engaged) except for glideslope capture, vertical go around, altitude hold or VNAV glide path capture, while the FMS altitude is invalid or missing.

ALTS arm is deselected upon occurrence of any of the following:

- Automatic transition to the capture state
- Turning off the FD while the AP is disengaged
- Activation of APPR mode
- Selection of vertical go-around or altitude hold modes

ALTS capture is deselected upon the occurrence of any of the following:

- Automatic transition to the track state
- Turning off the FD while the AP is disengaged
- Selection of any other active vertical mode
- Turning the altitude preselect knob
- If VNAV is deselected, pitch shall be selected as the active mode

Deselecting of ALTS track will occur due to any of the following:

- Turning off the FD while AP is disengaged
- Turning the altitude preselect knob when the VNAV altitude is not the same as preselected altitude being tracked; Altitude hold will be automatically selected as the active mode
- A change of the FMS flight plan target altitude if the VNAV altitude is target; altitude hold is automatically selected as the active mode
- If ALTS is tracking the flight plan target altitude and VNAV is deselected, altitude hold shall be the active mode.
- Activation of Vertical APPR Capture/Track states
- Selection of any other active vertical mode

Altitude select mode generates commands to capture and track selected altitude displayed on the PFD. During the altitude capture maneuver, or after being established on the selected altitude (altitude track), if the selected altitude is changed, the altitude hold mode is automatically selected. A deselection of vertical navigation mode, while capturing/tracking an FMS altitude, will also select altitude hold mode. In addition to altitude preselect being set with the altitude preselect knob, a FMS flight path target altitude can be programmed for use with VNAV. In the VNAV glide path capture mode, capturing the preselected altitude is prohibited.

FLIGHT DIRECTOR VERTICAL MODES (Cont)

When the closest altitude being approached is the preselected altitude, altitude preselect is annunciated on the PFD in one of the following ways:

- ALTS in white color in the vertical arm field — arm
- ALTS CAP in green color in the vertical capture field — capture
- ALTS in green color in the vertical capture field — track

When the closest altitude being approached is the FMS altitude, altitude select is annunciated on the PFD in one of the following ways:

- ALTV in white color in the vertical arm field — arm
- ALTV CAP in green color in the vertical capture field — capture
- ALTV in green color in the vertical capture field — track

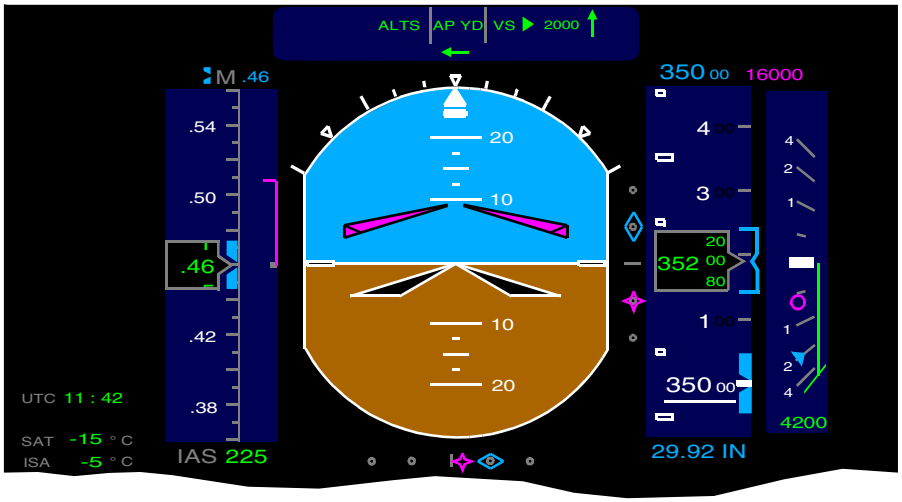

FLIGHT DIRECTOR VERTICAL MODES (Cont)

ALTITUDE ALERT SYSTEM

The altitude alert system provides aural and visual indications of the preselected altitude capture and tracking. It also provides audio and visual indications of altitude deviation from the preselected altitude.

The altitude alerting system processes data from the ADCs and is independent of the flight director or autopilot modes.

At approximately 1000 feet prior to the preselected altitude, an aural tone and flashing altitude preselect digits advises the pilot of impending level off. If the flight director is tracking a preselected altitude and the aircraft subsequently deviates more than 200 feet from the selected altitude, the altitude bugs flashes and a series of tones are produced.

If the aircraft continues to deviate uncorrected, at ± 1000 ft. from the selected altitude, the altitude bugs and digital readout flash amber and audible tones are produced.

(ALT) MODE

Selection of Altitude Hold Mode occurs due to one of the following:

- Pressing the ALT button on the FGP, except that ALT HOLD is inhibited when in glideslope capture
- If VNAV has been selected, the FMS may select the altitude hold mode
- Altitude PreSelect is changed during ALTS track state
- While in ALTS track, a change of the FMS VNAV altitude if the VNAV altitude is the target. Altitude Hold is automatically selected as the active mode

Altitude Hold Mode can be deselected, as follows:

- Turning Off the Flight Directors, while the AP is disengaged
- Another active vertical mode is selected
- If VNAV has been selected, the FMS may select another active vertical mode
- Another vertical mode is automatically captured, becoming the active mode
- The ALT mode button on FGP is pressed
- Changing coupled side

This mode is annunciated by a green ALT in the vertical capture field.

TAKEOFF MODE

Prior to takeoff, the vertical takeoff mode is selected when either TOGA switch is pressed and the flaps are set to a takeoff setting. A green TO message is displayed in the active vertical field. This mode generates a pitch up command that is calculated when the pilot enters V_2 and V_R values in the REFS 1/3 page or via the FMS TAKEOFF REF page. Loss of an engine reduces the pitch up command appropriately. If V_2 and V_R are not entered when the TOGA switch is pushed, the command bars are removed from the display.

GO-AROUND MODE (GA)

Go-around (GA) mode is selected by pushing one of throttle-mounted TOGA buttons while airborne. Selection of GA mode turns on both flight directors, disengages the autopilot (but not the yaw damper), clears all other vertical modes (except overspeed), and switches the flight guidance commands to a dual-independent configuration.

This mode is cleared by:

- Turning off the flight directors
- Engaging the autopilot
- Selecting another vertical mode
- Pressing AP/FD SYNC button
- Rotating the UP/DOWN wheel, which selects Pitch Hold

The GA Mode generates a 10° pitch up command.

This mode is annunciated by a green GA in the lateral and vertical capture field.

FLIGHT DIRECTOR VERTICAL MODES (Cont)

FLIGHT LEVEL CHANGE (FLC) MODE

In flight level change mode (FLC), the flight director provides commands to acquire and track an IAS or Mach reference airspeed. The IAS/MACH reference values may be adjusted by turning the speed knob on the FGP.

The IAS/MACH reference values, may be adjusted by the pilot by turning the Speed knob on FGP. These values can also be synchronized by the FGC or by the FMS when in VNAV mode and RESUME VNAV PLAN SPEED is selected on the FMS PERF MENU page.

FLC mode may be selected in the following ways:

- Pressing the FLC button on the FGP, except FLC is inhibited from being selected while in the Vertical Approach Capture / Track Mode
- Using FMS, if VNAV has been selected

FLC mode may be deselected as follows:

- Turning the FD off while the AP is disengaged
- Another vertical mode is selected or automatically captured
- If VNAV has been selected, and FMS selects another active vertical mode
- Pressing FLC button on the FGP
- Changing the coupled side

When the FLC mode is first selected, the flight director synchronizes the IAS or Mach airspeed reference to the current speed.

FLC is displayed in green letters in the vertical capture field.

OVERSPEED MODE

If any significant overspeed occurs when the aircraft is at or above the overspeed transition altitude and airspeed is greater than 0.845 MI, or is below the overspeed transition altitude and airspeed is greater than 10 kt above VMO. Overspeed Mode is automatically engaged by the FGC unless altitude hold or altitude preselect are active. The FGC generates the commands to reduce the airspeed to below VMO/ MMO. While in overspeed mode, the selection or activation of a vertical mode other than altitude hold or ALTS capture or track is inhibited. Activation of overspeed mode causes the FGC to automatically turn on the flight directors and inhibit the FD from being turned off until another mode is manually or automatically selected.

Flight Guidance can not be deselected in FLC Overspeed. While in FLC Overspeed, the Altitude Preselector will not inhibit commands to climb or descend as required to capture the reference airspeed.

When Flight Level Change Overspeed is detected, a FLC OSPD flashing in amber in the top (capture) field on the PFD. If VNAV is active in the vertical field, a VFLC OSPD flashing amber CAS is depicted on the PFD.

VERTICAL NAVIGATION MODE

VNAV mode allows the FMS to execute its vertical flight plan by issuing various commands to the FCS. Therefore, VNAV is not a FCS mode, but enables the FMS to command various FCS vertical modes and to provide references associated with those modes. VNAV is selected only when onside FMS is the active NAV source on the PFD. VNAV mode is selected by pressing the VNAV button on FGP. VNAV is inhibited when the FCS is in the vertical approach capture/track, if ILS is the vertical source, or when Overspeed mode is active.

VNAV mode is deselected as follows:

- Turning off the FD while the AP is disengaged
- Automatic capture/track of vertical approach mode, when ILS is the vertical source
- Selecting TO or GA mode
- Changing the source of the active VNAV data
- By pressing the VNAV mode button on the FGP

FLIGHT DIRECTOR VERTICAL MODES (Cont)

VERTICAL SPEED MODE (VS)

When the VS mode is selected, the Flight Guidance Computer (FGC) commands the aircraft to climb or descend with a vertical speed measured in feet per minute. Initially the rate will be vertical speed sensed at the time of VS mode engagement.

Turning the UP/DOWN wheel on the FGP changes the VS reference value. Each click of the wheel is equal to ± 100 ft/min.

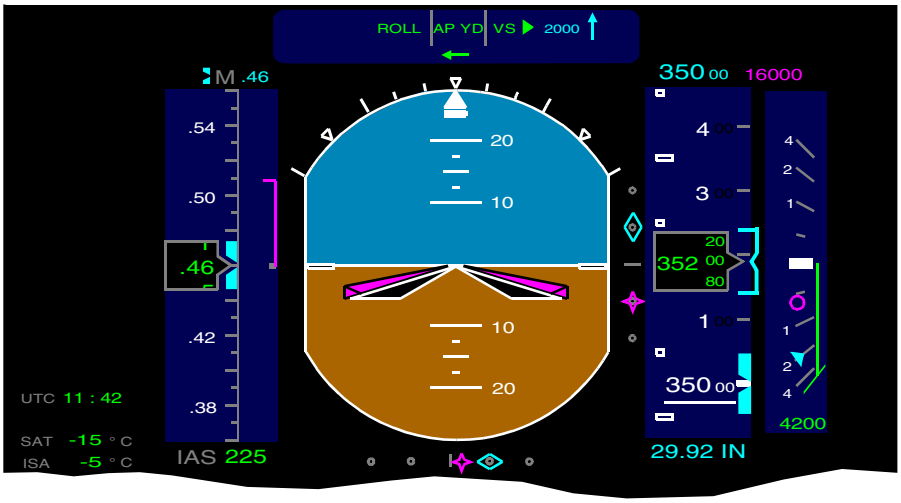

CFO0401002_009

APPROACH MODE (APPR)

In the approach mode, the FGC generates commands to track vertical guidance for ILS precision glideslope approaches or for FMS non-precision glide path (GP) approaches. Approach mode is selected by pushing the APPR button on the FGP.

GLIDESLOPE MODE

Glideslope is automatically selected when in approach mode, inbound, with a valid localizer as the lateral navigation source. Glideslope mode is cleared by deselection of approach mode. When armed, glideslope mode is also cleared by turning outbound, or by loss of a valid localizer as the lateral navigation source. When captured, glideslope mode is cleared by changing the source of the lateral navigation source to anything other than a valid localizer.

Glideslope mode generates commands to capture and track glideslope. Captures can be performed from below or above the beam. The capture point is a function of the closure rate, with the capture point moving away from the beam for high closure rates. Capture will not occur if the localizer is not captured, or if the FGC is not receiving valid glideslope data.

Upon glideslope capture, other vertical modes are automatically cleared.

When the APPR capture occurs, the flight directors automatically change to independent mode. When the glideslope captures are not concurrent and only one side has captured, vertical mode selection, PFD annunciation, etc. operate independently on the noncaptured side.

The GS mode is deselected when one of the following occur:

- Another mode is selected.
- Changing the active NAV source.
- VOR/LOC frequency is changed.
- By pressing APPR button again.
- Changing the XFR side when APPR is armed.
- The FDs are turned off while the AP disengages.

Glideslope arm is annunciated by the white GS message in the vertical (arm) field on the PFD.

FLIGHT DIRECTOR VERTICAL MODES (Cont)

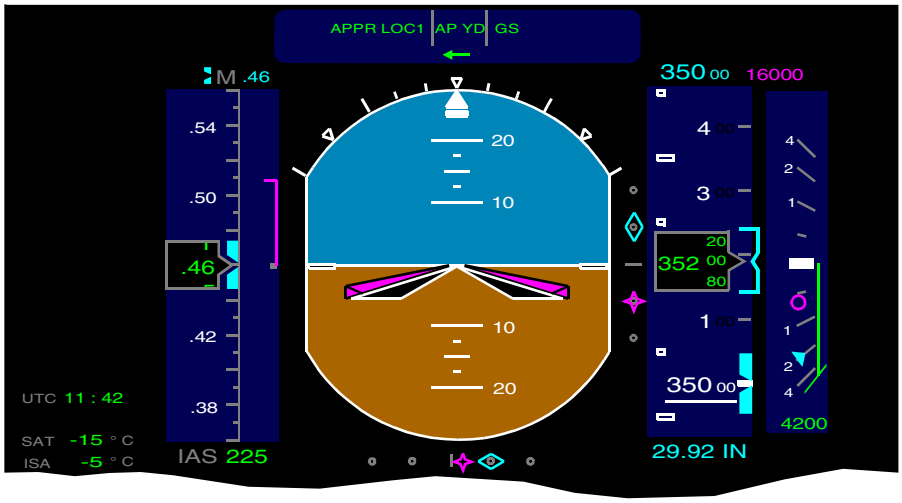

CFO0401002_021

GLIDEPATH MODE

This mode can be selected only by the FMS, as follows:

- While FCS is in the VNAV mode and approach mode
- FMS is the active Nav source
- No preselect Nav source is active
- FMS VNAV is valid

There is no button for glide path mode on the FGP. Glide path is automatically deselected/cleared by deselection of VNAV or approach modes or by selection or capture of another active vertical mode.

Glide path mode generates commands to track a vertical path, defined by the FMS.

Glide path capture disables use of the preselected altitude mode operation. Glide path arm is annunciated with a white GP in the vertical arm field of the PFD. Glide path capture is annunciated by the green GP in the vertical capture field on the PFD.

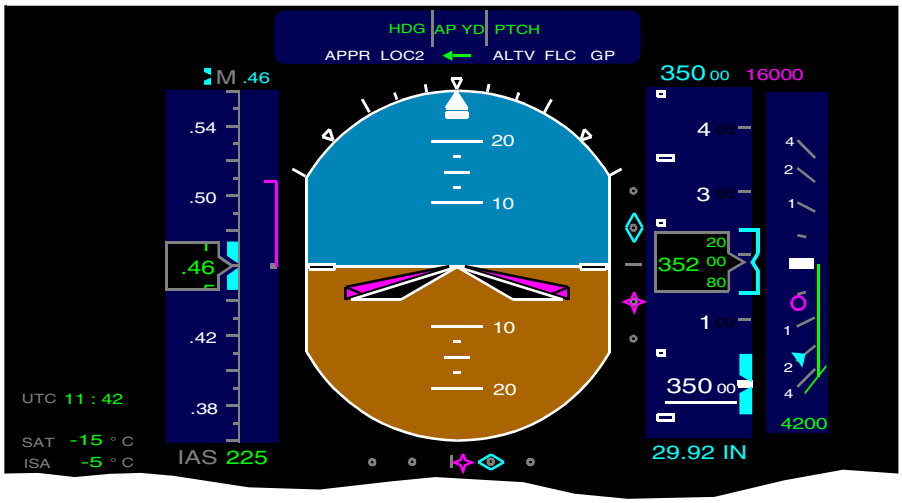

CFO0401002_010

AUTOPILOT

DESCRIPTION

The Challenger 300 his equipped with a three axis digital fail-passive autopilot. Autopilot servos provide command inputs to the ailerons and elevators. The rudder is controlled by the yaw damper system. The coupled flight guidance computer provides the flight guidance signals to drive the servos. Both flight guidance computers must be operational for the autopilot to function.

Upon occurrence of any single failure, the autopilot will not:

- Cause significant displacement of the aircraft from its approach path or altitude loss below the nominal glide path
- (Upon system disconnection) Involve any out-of-trim condition not easily controlled by the pilot
- Cause any action to occur with the flight control system that is not readily apparent to the pilot, either by control column movement or advisory display

The automatic flight-control system (AFCS) consists of dual-independent flight directors, a three axis autopilot, and automatic pitch trim and yaw damper system.

The AFCS operates with the integrated-avionics processor system (IAPS). The IAPS collects the data for the avionics systems. The AFCS gives the course, heading, and preselected altitude data to the electronic flight instrument system (EFIS).

The AFCS calculates the vertical and lateral flight-guidance commands to keep the aircraft on the correct pitch/roll attitude. The flight directors show the flight-guidance commands on the primary flight displays.

ENGAGEMENT PARAMETERS

The autopilot can be engaged using the AP switch on the FGP, if the following conditions exist:

- Yaw damper is operable
- Both flight guidance computers (FGCs) are serviceable
- At least one channel of the horizontal stabilizer trim is engaged and the FCCs detect no faults with the horizontal stabilizer trim system
- No significant instability of the aircraft exists

COMPONENTS AND OPERATION

AUTOPILOT ENGAGEMENT

The autopilot is engaged by pressing the AP switch located on the flight guidance panel. When the autopilot is engaged, both channels of the autopilot are coupled to the onside flight guidance computer. Autopilot engagement is indicated on the PFD by a green AP indication.

Pressing the AP switch on the FGP when the autopilot is engaged will cause the autopilot to disengage.

AUTOPILOT SERVO MOTORS

When the autopilot is engaged, the controlling FGC directs pitch and roll commands to the aileron and elevator servos. When a change in roll or pitch attitude is required, the FGC signals the aileron servo or elevator servo to bias the control cables to move the associated control surface.

The aileron servo is located on the control cable run for the right aileron. Since the left and right ailerons are normally interconnected, the servo is capable of moving both ailerons. The elevator servo is located in the left elevator cable run. The servo moves both elevators when the elevators are interconnected.

When an out-of-trim condition is sensed in the pitch axis, the FGC signals the horizontal stabilizer trim control unit to reposition the horizontal stabilizer.

AUTOPILOT (Cont)

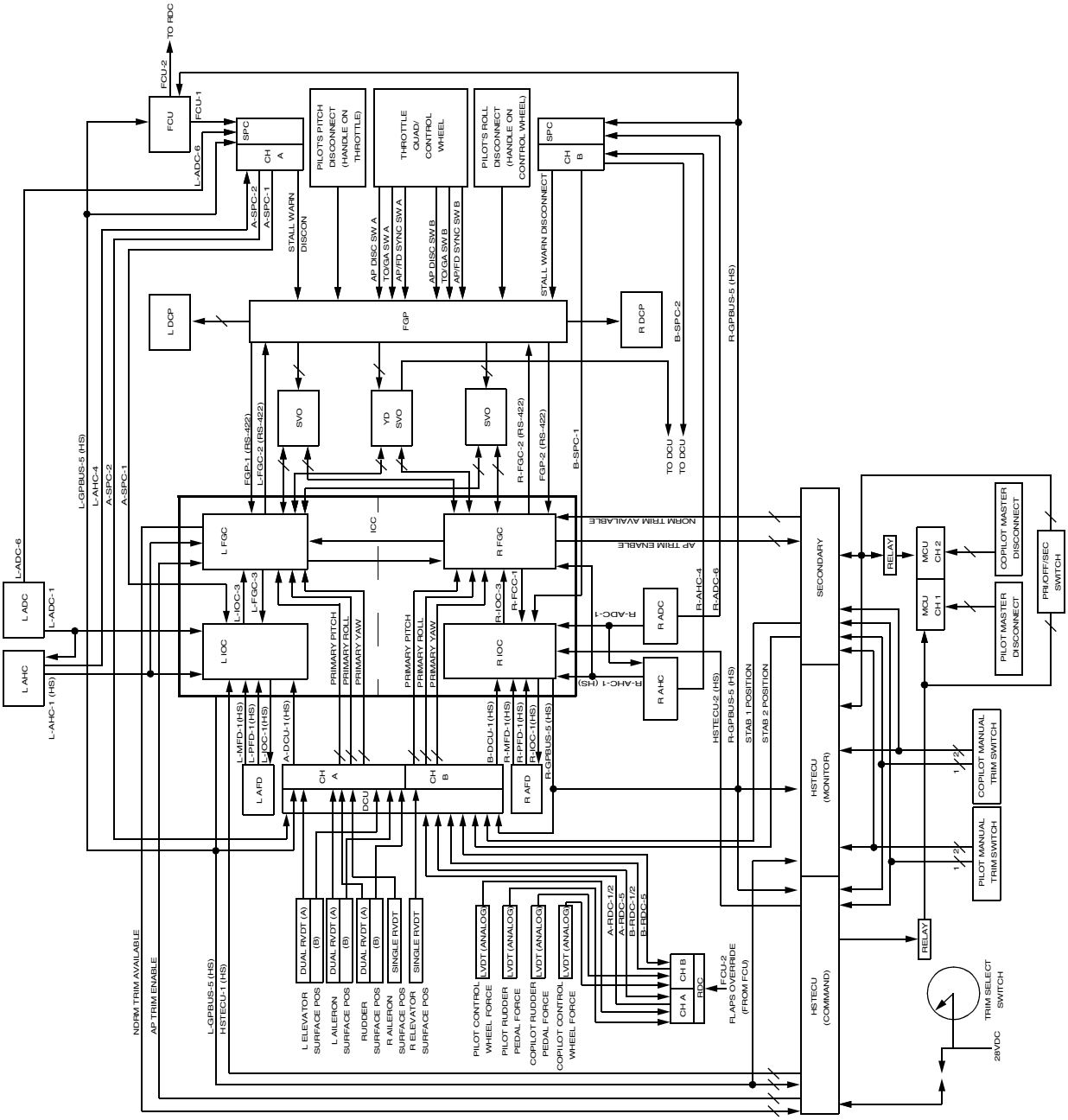

AUTOPILOT (Cont)

OUT-OF-TRIM INDICATIONS

The FGC continuously monitors all three axes of the autopilot when it is engaged. If a control surface is detected to be significantly out of trim, a CAS caution message is displayed. The amber CAS message identifies whether it is the aileron or elevator that is affected and in which direction the control surface is out of trim.

MASTER DISCONNECT SWITCH

The master disconnect switches are installed on the outboard horn of each control wheel. When the switches are pressed with the autopilot engaged, the PFD red flashing AP indication appears and the autopilot audio warning sounds for approximately 1 1/2 seconds.

If a system fault causes the autopilot to disengage, pressing either master disconnect switches will cancel the red flashing AP message and silence the aural warning.

AUTOPILOT AND YAW DAMPER DISCONNECT LEVER

Pressing the AP/YD DISC lever down disengages the autopilot and yaw damper simultaneously. With the autopilot engaged and the disconnect switch pressed down, a flashing red AP message appears on the PFD and the autopilot audio warning sounds for approximately 1 1/2 seconds.

A red line is visible on the top edge of the switch when the switch has been moved to the disengage position.

AUTOPILOT DISENGAGEMENT

When the autopilot is manually disengaged, the AP symbols on each PFD flash red and an aural warning sounds for approximately 1 1/2 seconds.

The autopilot can be manually disengaged by:

- Pressing either master disconnect push button on the control wheels
- Activating the stab trim switches on the control wheels
- Pressing the AP push button on the FGP
- Selecting the AP/YD DISC on the FGP
- Pressing either TOGA switch
- Pressing the YD push button

If a system fault causes the autopilot to automatically disengage, the pilot must press the control wheel master disconnect switch to cancel the red flashing AP message and silence the aural warning. If the autopilot warning sounds because the TOGA switch is selected, a second press of the TOGA switch clears the warnings.

The autopilot automatically disengages upon stall warning.

AUTOPILOT TAKEOFF CONFIGURATION WARNING

If a takeoff is attempted with the autopilot on, the takeoff configuration warning system presents an EICAS warning message and sounds an voice alert. The warning sounds when the thrust lever is advanced for takeoff.

YAW DAMPER

DESCRIPTION

The yaw damper provides automatic turn coordination and yaw oscillation damping. The yaw damper actuator is a mechanically limited linear actuator.

Yaw damping improves the aircraft's stability by damping out oscillations in yaw. These oscillations, if not corrected leads to the phenomenon called dutch roll.

The turn coordination function helps the aircraft into and out of turns. The flight guidance computers (FGCs) provide signals to operate the yaw damper actuators.

The AP/YD DISC switch, YD switch and control wheel disconnect switches will disengage the yaw damper. When a yaw damper channel fails or disconnects, the amber YAW DAMPER FAIL CAS message is displayed.

CONTROLS AND INDICATIONS

DESCRIPTION

The flight guidance panel (FGP) is the mode selection panel that selects and controls the flight director and autopilot functions.

The PFD presents the FGP modes to the pilot through the use of flight mode annunciations and command bars. Autopilot engagement and system malfunctions are presented on the PFD.

An autopilot synchronization switch on the control wheel allows the FD command bars to be synchronized with the actual aircraft vertical and lateral reference when the autopilot is engaged. The AP/YD DISC switch disconnects the autopilot. TOGA switches are provided on both thrust levers.

Normal and non-normal AFCS indications are displayed on the PFDs and MFDs.

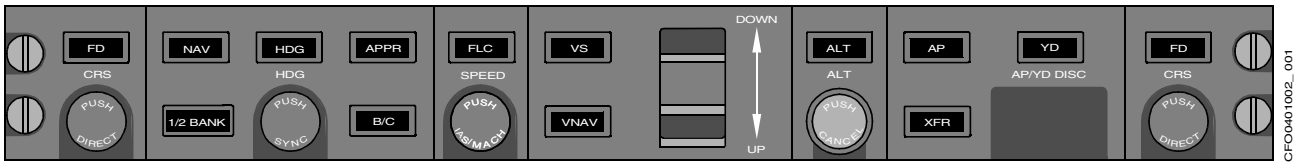

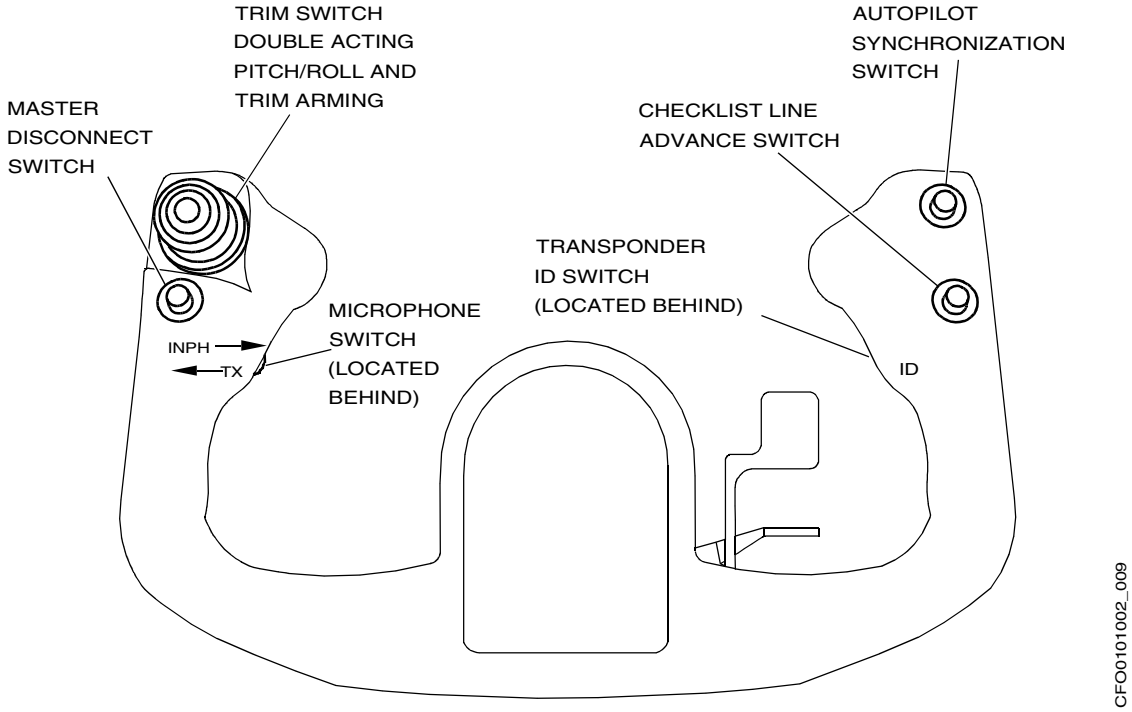

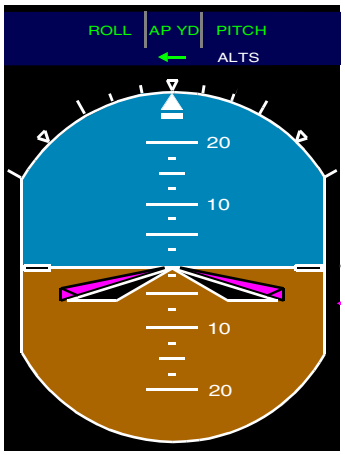

PFD MESSAGES

The following indications are presented on the PFD. A brief explanation of each indication is provided.

1.	ALT	Green	Altitude HOLD mode — capturing/tracking
2.	ALTS	White	Altitude select mode — armed preselect
		Green	Altitude select mode — track, preselect
		Flashing Yellow	Altitude select mode — aborted capture preselector
3.	ALTS CAP	Green	Altitude select mode — armed for FMS
4.	ALTV	White	Altitude select mode tracking FMS
		Green	Altitude select mode — track, preselect
		Flashing Yellow	Altitude select mode — aborted capture FMS
5.	ALTV CAP	Green	Altitude select mode — capturing FMS
6.	← AP	Green	AP engaged and not transferred — left FD selected
		Flashing Red	AP disengage warning, and not transferred — Left FD selected
		Yellow	AP engaged and not transferred, with AP synchronization in process (the aileron and elevator clutches are released)
7.	→ AP	Green	AP engaged and transferred — Right FD selected
		Flashing Red	AP disengage warning, and transferred to the Right FD
		Yellow	AP engaged and transferred, with AP synchronization in process (the aileron and elevator clutches are released)
8.	ATT (boxed)	Red	The red, boxed, ATT attitude flag shows when attitude data from the selected AHRS are missing or invalid
		Yellow	Each PFD compares the attitude data from the on-side Attitude Heading Computer (AHC). The ATT flag is yellow when both pitch and roll data are out of limits
9.	B/C1 B/C2	White	Back course mode armed (annunciated in the lateral arm field, by identifying the nav source)
		Green	Back course mode — capture/tracking (annunciated in the lateral arm field, by identifying the nav source)
10.	DR	White	Dead Reckoning operation
11.	FD (boxed)	Red	Flight director flag (within the attitude ball)
12.	FD1	Green	FD computations performed by FD1 (on the copilot's PFD)
13.	FD2	Green	FD computations performed by FD2 (on the pilot's PFD)
14.	FLC	Green	Flight level change mode (on the vertical capture field)
15.	GA	Green	Lateral Go-Around Mode (in lateral capture field)
		Green	Vertical Go-Around Mode (in vertical capture field)

PFD MESSAGES (Cont)

16.	LNV1 LNV2 LOC1 LOC2 VOR1 VOR2	White	Navigation or approach mode — armed (annunciator in the lateral arm field, by identifying nav source)
		Green	Navigation or approach mode — capture/tracking (in the later capture field by identifying the nav source)
17.	GS	White	Glideslope mode — armed (announced in the vertical arm field)
		Green	Glideslope mode — captured (in the vertical capture field)
18.	GP	White	Glidepath mode — armed in the vertical arm field
		Green	Glidepath mode — capturing/tracking a vertical path
19.	HDG	Green	Heading select mode
20.	PATH	Green	Vertical Nav mode — capturing/tracking a vertical path
21.	PTCH	Green	Pitch mode
22.	ROLL	Green	Roll mode
23.	SYNC	Yellow	FD synchronization in process
24.	TEST	Yellow	Diagnostic Mode (displayed in large text)
25.	TO	Green	Lateral takeoff mode (annunciator in lateral capture field)
		Green	Vertical takeoff mode (annunciator in vertical capture field)
26.	V	Green	VNAV mode, FMS NAV is valid and not overspeed mode (V is prefixed on the vertical capture annunciator)
		Flashing Yellow	VNAV mode, FMS NAV is valid and overspeed mode (V is prefixed on the vertical capture annunciator)
27.	VNV	Yellow	Vertical Nav mode, and FMS NAV is valid and overspeed mode (V is prefixed on the vertical capture annunciator)
28.	VS	Green	Vertical Speed mod
29.	1/2 BNK	Green	Half Bank mode
30.	v-bars	Magenta	Integrated lateral and vertical flight guidance commands (not present if either command is invalid)
31.	Pitch command cross-pointer	Magenta	Vertical flight guidance command (not present if the command is invalid)
32.	Roll command cross-pointer	Magenta	Lateral flight guidance command (not present if the command is invalid)
33.	Cross-line over the annunciation symbol(s)	Red	A required data source is invalid, for the active lateral outer loop (the line is drawn through the active lateral mode annunciation)
			A required data source is invalid, for the active vertical outer loop (the line is drawn through the active vertical mode annunciation)

EICAS MESSAGES

The autoflight control system messages are shown on the EICAS. In the table below, the AFCS messages, inhibits and aural warnings are listed. A brief explanation of each message is provided.

MESSAGE	INHIBITS	MEANING	AURAL WARNING
CONFIG AILERON TRIM CONFIG AUTOPILOT CONFIG FLAPS CONFIG RUDDER TRIM CONFIG SPOILERS CONFIG STAB TRIM	TO	The aircraft is on the ground and the takeoff parameters (autopilot, flaps, spoilers, and trims in any axis) are not properly configured for takeoff. Illumination of the respective red CAS will be accompanied by the takeoff “CONFIGURATION“ voice warning	YES
AFCS MESSAGES FAIL		Monitoring and indication of the autopilot modes may be unreliable	
AP HOLDING LWD AP HOLDING RWD AP HOLDING NOSE DOWN AP HOLDING NOSE UP	TO	The autopilot is holding control force in the direction indicated	
AP STAB TRIM FAIL	TO	The autopilot is unable to make a trim correction to the horizontal stabilizer	
FD MODE CHANGE		An indirect mode change has occurred within the flight director. An example of an indirect mode change would be NAV or APPR mode changing to ROLL with a navigation source or frequency change	
YAW DAMPER FAIL	TO/LAND	The yaw damper has failed	
FD 1 FAIL FD 2 FAIL	TO/LAND	The respective flight director has failed accompanied by an FD flag on the PFD	

EICAS MESSAGES

The autoflight control system messages are shown on the EICAS. In the table below, the AFCS messages, inhibits and aural warnings are listed. A brief explanation of each message is provided.

MESSAGE	INHIBITS	MEANING	AURAL WARNING
CONFIG AILERON TRIM CONFIG AUTOPILOT CONFIG FLAPS CONFIG RUDDER TRIM CONFIG SPOILERS CONFIG STAB TRIM	TO	The aircraft is on the ground and the takeoff parameters (autopilot, flaps, spoilers, and trims in any axis) are not properly configured for takeoff. Illumination of the respective red CAS will be accompanied by the takeoff “CONFIGURATION“ voice warning	YES
AFCS MESSAGES FAIL		Monitoring and indication of the autopilot modes may be unreliable	
AP HOLDING LWD AP HOLDING RWD AP HOLDING NOSE DOWN AP HOLDING NOSE UP	TO	The autopilot is holding control force in the direction indicated	
AP STAB TRIM FAIL	TO	The autopilot is unable to make a trim correction to the horizontal stabilizer	
FD MODE CHANGE		An indirect mode change has occurred within the flight director. An example of an indirect mode change would be NAV or APPR mode changing to ROLL with a navigation source or frequency change	
YAW DAMPER FAIL	TO/LAND	The yaw damper has failed	
FD 1 FAIL FD 2 FAIL	TO/LAND	The respective flight director has failed accompanied by an FD flag on the PFD	

Table of Contents

Introduction 05-01-01
Compartment 05-01-01
APU Access Panel Locations 05-01-02
APU Schematic 05-01-03
Power Section and Gearbox 05-01-04
Description 05-01-04
Components and Operation 05-01-04
Power Section 05-01-04
Gas Generator 05-01-04
Gearbox Assembly 05-01-04
Air Intake and Exhaust 05-01-05
Description 05-01-05
Components and Operation 05-01-05
Exhaust 05-01-05
Exhaust Gas Temperature 05-01-05
Lubrication System 05-01-05
Description 05-01-05
Components and Operation 05-01-05
Fuel Distribution 05-01-06
Description 05-01-06
Components and Operation 05-01-06
APU Fuel Supply 05-01-06
Fuel Control Unit and Fuel Shutoff Solenoid 05-01-06
APU Shutdown Mode 05-01-06
Start and Ignition 05-01-07
Description 05-01-07
Components and Operation 05-01-07
Starter 05-01-07
Ignition System 05-01-07
System Operation 05-01-07
Pneumatic Supply 05-01-08
Description 05-01-08
Components and Operation 05-01-08
Bleed Valve Modulation/Bleed Air Loads 05-01-08
Bleed Valve 05-01-08
Surge Control Valve 05-01-08
Bleed Air Availability 05-01-08
Bleed Air Limitations 05-01-08
Control and Indications 05-01-09
Description 05-01-09
External Power Control Panel 05-01-09
Air Cond/Bleed Control Panel 05-01-10
Electrical Control Panel 05-01-11
Electrical Synoptic Page 05-01-12
ECS Synoptic Page 05-01-13
Fuel Synoptic Page 05-01-14
EICAS Messages 05-01-15

INTRODUCTION

The Honeywell 36-150BD constant-speed gas turbine auxiliary power unit (APU) is installed in a fire-proof compartment in the tailcone of the airplane. The APU is a fully automated gas turbine powerplant with automatic fault detection, automatic and remote shutdown, and in the event of an APU fire on the ground, automatic fire extinguishing.

The APU compartment is accessed by a single panel aft of the aft equipment bay door. The panel must be unscrewed from the fuselage underside. The APU is a self-contained unit.

The primary purpose of the APU is to provide power for the gearbox-mounted 400-amp DC generator. Secondary functions of the APU are bleed-air supply for the environmental control system (ECS) and main engine starting. Under high demand, the APU electrical loads take priority over pneumatic loads.

For APU maximum operating altitudes for ground and flight, and also for continuous starter attempts, refer to the Approved Airplane Flight Manual.

The APU should not be started above speed limits stated in the Approved Airplane Flight Manual, as the APU may reverse windmill.

An engine control unit (ECU) controls and monitors all facets of APU operation, including the recording of operating hours and start cycles. The DC-powered ECU sets up the appropriate fuel acceleration and EGT temperature schedules. It relays appropriate operating data to the pilots through the EICAS displays.

APU start is initiated by one switch on the APU control panel in the flight compartment. Operational control of the APU electric and bleed-air systems is performed at the ELECTRICAL and AIR COND/BLEED control panels.

COMPARTMENT

The APU is mounted in the airplane tailcone and is accessed via the access panel located on the fuselage underside. The APU compartment has a NACA inlet for ventilation. The air is pulled through the NACA inlet and routed through the compartment to cool the APU and its mounted components. This air is then exhausted overboard via the APU exhaust eductor.

The APU-driven air-cooled DC generator also has a NACA inlet for cooling air flow. The air is pulled through the generator and dumped in the APU compartment. This air is then exhausted overboard via the APU exhaust eductor.

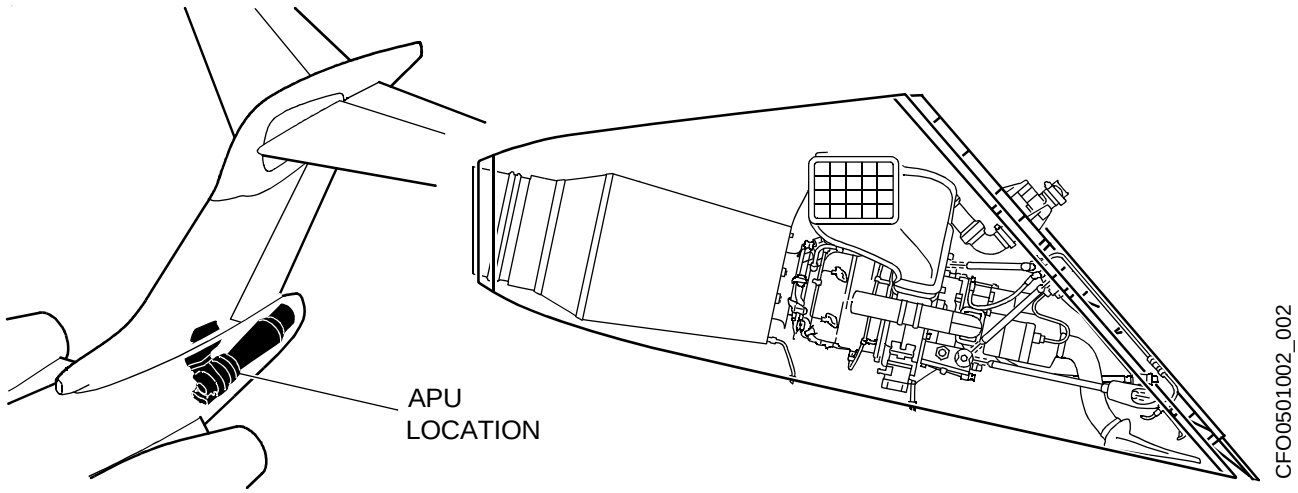

APU ACCESS PANEL LOCATIONS

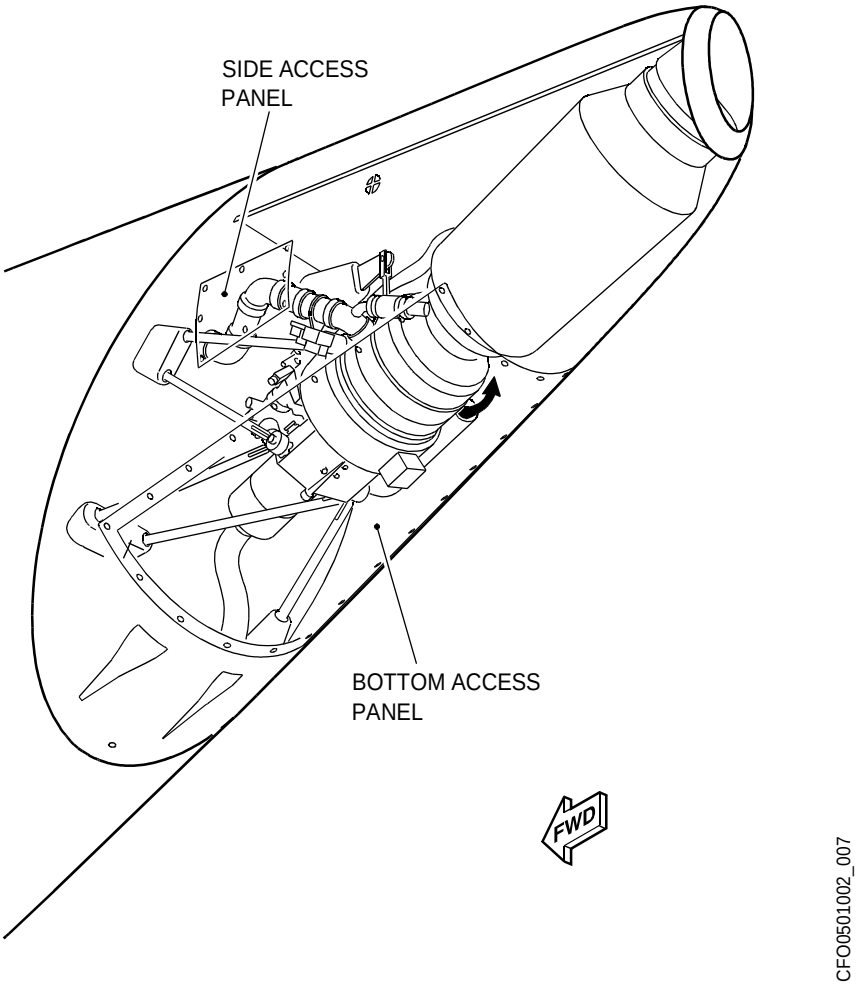

APU SCHEMATIC

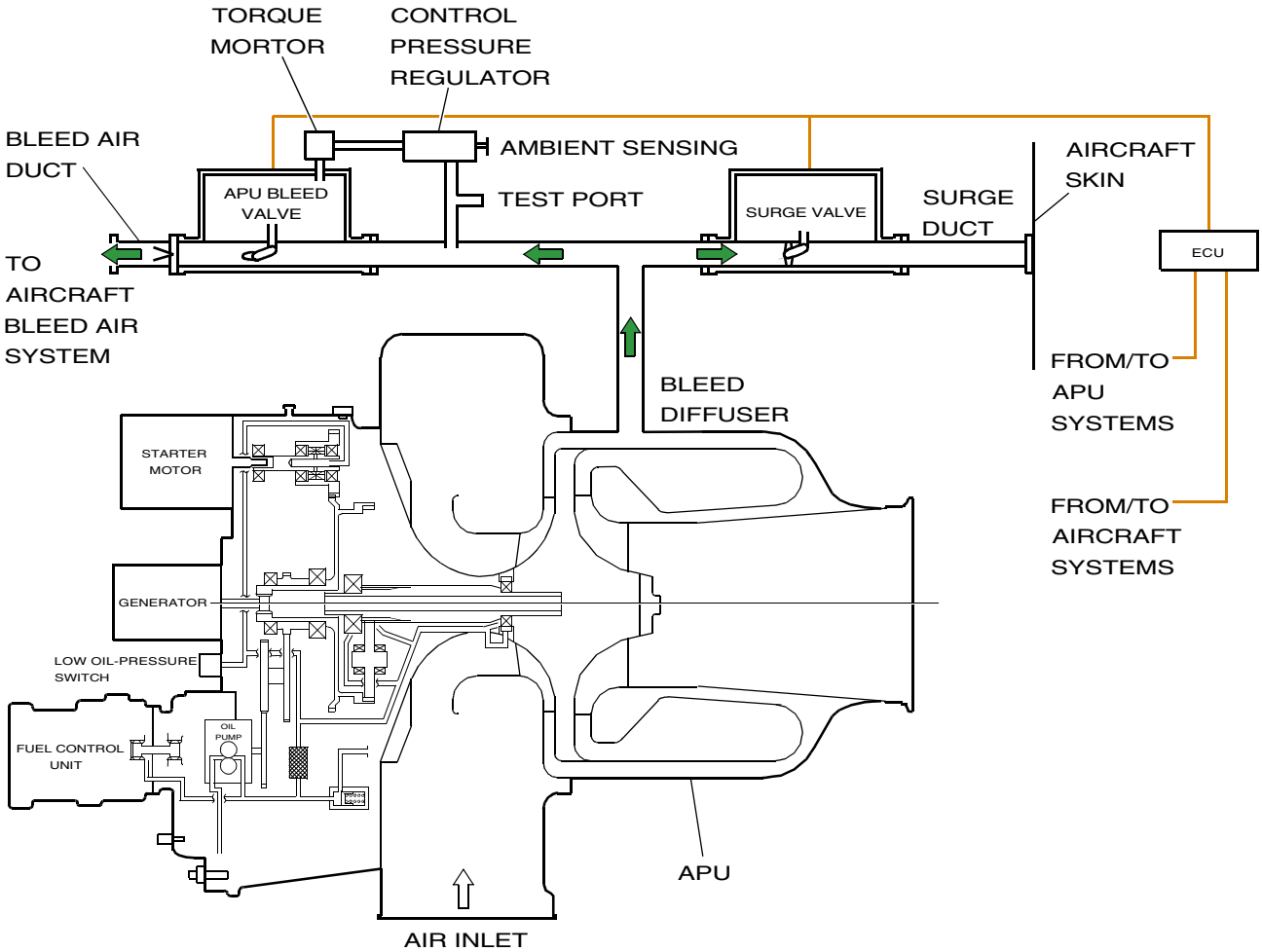

INLET AIR

BLEED AIR

ELECTRICAL CIRCUITS

CFO0501002_005

POWER SECTION AND GEARBOX

DESCRIPTION

The power section of the Honeywell 36-150BD APU consists of a gas turbine engine with integrated oil, ignition and start systems. The power section drives a gearbox that reduces the rotational speed of the APU for operation of the gearbox-mounted accessories.

The APU contains the following components:

- Single-stage centrifugal compressor
- Single-stage radial turbine
- Accessory gearbox with an integral oil reservoir
- Annular reverse flow combustor

COMPONENTS AND OPERATION

POWER SECTION

Engine power is developed through compression of ambient air by a centrifugal compressor. The compressed air, when mixed with fuel and ignited in the annular reverse flow combustor, drives a single-stage radial turbine. The rotating shaft of the turbine rotor drives the compressor, output drive shaft, and accessories.

GAS GENERATOR

The gas generator contains the following components:

- Compressor
- Annular reverse flow combustion chamber
- Turbine

GEARBOX ASSEMBLY

The gearbox assembly provides power transfer from the starter motor to the accessories and power section during APU starting as well as to all gearbox-mounted accessories during on-speed operation.

The APU accessories include:

- Starter
- DC Generator
- Oil pump
- Speed sensor
- Fuel control unit and high-pressure pump

The APU gearbox also serves as a sump for the lubrication system and incorporates the oil gravity fill cap and quantity sightglass.

AIR INTAKE AND EXHAUST

DESCRIPTION

The APU air intake is located above the APU compartment on the right side of the fuselage, below the vertical stabilizer.

The APU exhaust gases are discharged by an exhaust duct and eductor through the tailcone of the aircraft.

COMPONENTS AND OPERATION

EXHAUST

The exhaust duct is covered by an insulated exhaust muffler.

EXHAUST GAS TEMPERATURE

The APU exhaust gas temperature (EGT) is displayed as a digital readout on the EICAS.

LUBRICATION SYSTEM

DESCRIPTION

The APU has a self-contained lubrication system. Major components include a gearbox mounted oil pump and an integral gearbox oil sump. Intake air cools oil and ventilates of the APU enclosure. A magnetic chip collector provides visual indication of metal particles in the lubrication system.

COMPONENTS AND OPERATION

The oil pump directs filtered oil under pressure to the APU bearings, gearbox, and generator bearings.

FUEL DISTRIBUTION

DESCRIPTION

The Honeywell 36-150BD APU fuel system is a full-authority digital electronic engine (FADEC) controlled system. During start, the fuel system provides the correct amount of fuel to support combustion and smooth acceleration of the engine to full power. When full power is reached, fuel flow is modulated to meet electrical and pneumatic load while maintaining a constant engine speed.

Protection from overtemperature during APU acceleration is provided by protective features incorporated in the ECU.

The APU receives fuel from the right collector tank. The APU fuel system incorporates the right DC-powered fuel pump, fuel feed shutoff valve (SOV), fuel shutoff solenoid, fuel system filters, a high-pressure fuel pump (mounted on the APU), fuel control unit (FCU), and the fuel manifold assembly.

COMPONENTS AND OPERATION

APU FUEL SUPPLY

The right DC-powered fuel pump delivers fuel under pressure to the APU fuel control unit. When the right engine is running, the fuel pump ceases operation and fuel is delivered by the main engine ejector pump.

FUEL CONTROL UNIT AND FUEL SHUTOFF SOLENOID

The APU fuel control unit (FCU) meters fuel under command of the electronic control unit (ECU). During the start sequence, the fuel shutoff solenoid, located between the FCU and the fuel nozzles is opened by the ECU at 5% rpm. Fuel is supplied in accordance with a schedule that accelerates the APU throughout the start sequence. When the APU is stabilized, fuel scheduling is influenced by the rpm and EGT as well as generator and bleed air demands.

During normal or automatic APU shutdown, an overspeed signal closes the fuel solenoid valve and torque motor at the APU and causes the APU to shutdown.

APU SHUTDOWN MODE

Engagement of the APU master switch to OFF, remote stop, emergency/fire, or in the event of an exceeded limit, the ECU initiates the APU shutdown sequence by commanding the fuel off. When the shutdown sequence is complete, the ECU transitions to idle mode and then powers down if the APU master switch is in the OFF position. The following is a list of all the APU protective shutdowns showing the ones that are inhibited in-flight (essential mode):

* - An asterik indicates these shutdowns are inhibited in the essential mode.

28 VDC Power Loss	Fire Indication*
Reverse Flow*	No Acceleration (during start)*
Loss of EGT Signal*	Overspeed
Low Oil Pressure*	Emergency Fire
High Oil Temperature*	Internal ECU Failure
Overtemperature*	Loss of Overspeed Protection Circuit
No Flame (during start)*	

START AND IGNITION

DESCRIPTION

The starting and ignition systems operate automatically during the APU start sequence.

COMPONENTS AND OPERATION

STARTER

The APU start system consists of a DC starter and a series of relays controlled by the electronic control unit (ECU). The electrical power source is:

- ECU — battery bus
- Starter — APU battery direct bus

To start the APU, the APU start contactor is closed and the right battery is connected to the APU starter.

The right battery contactor is opened to isolate the right battery from the right essential bus during APU start to prevent a voltage drop on the essential busses. The left battery maintains power to the left and right essential busses during APU start

It is important to delay starting the APU for five minutes after application of anti-icing fluid near the APU area. This allows any anti-icing fluid inadvertently directed into the APU inlet to drain out.

Three consecutive APU start attempts may be made at 1 minute intervals, followed by a 20 minute wait. Two more start attempts may be made. No further attempts may be made for a period of at least 40 minutes.

Six consecutive and successful APU starts may be made at 10 minute intervals with a one-hour waiting period prior to additional start attempts.

IGNITION SYSTEM

The APU ignition system consists of an ignition unit, igniter plug lead and a single igniter plug. The ignition system is energized during the APU start cycle and is de-energized when the APU start sequence is complete. To engage the APU, pull up on the switch, position the switch to RUN for approximately 3 seconds until the APU indications are displayed on the left MFD. Then move the switch to START and hold until the START icon is displayed on the left MFD, the APU will then begin the start sequence.

The APU ignition system consists of a single output ignition unit. Should a flameout occur during operation, the ignition unit automatically fires the igniter through the auto relight function of the ECU. An immediate restart (APU starter re engagement) can be initiated upon APU rolldown below 10% rpm.

SYSTEM OPERATION

The ECU uses 28 vdc power from the right aircraft battery bus to energize the ignition system during the ignition/start sequence. During the start sequence, the R BATT switch is illuminated OFF on the ELECTRICAL panel and the flow line from R BATT to the R ESS BUS on the Electrical synoptic page is depicted in white. The ignition system is energized at 5% APU rpm and stays energized until 95% rpm.

PNEUMATIC SUPPLY

DESCRIPTION

APU compressor bleed air is used to pressurize the right side of the bleed air manifold to provide pneumatics for engine starting and air conditioning. Reverse airflow protection is provided by a one way check valve.

COMPONENTS AND OPERATION

The APU pneumatic control system consists of a bleed valve and a surge control valve.

BLEED VALVE MODULATION/BLEED AIR LOADS

The pneumatic load on the APU is controlled by the ECU as a function of demands sent from the APU bleed valve. When the bleed valve is opened, a portion of the compressor discharge air is diverted from the plenum chamber to the right side of the bleed air manifold. The bleed valve opens when the flight deck APU bleed load switch is placed in the open position.

The APU engine reaction to bleed loads is different from shaft loading. Bleed air extraction from the APU diverts pneumatic energy from the turbine and some of the cooling air from the combustion system. As with the shaft load, the rpm drops, and with the corresponding ECU command fuel flow increase, recovers to full governed speed.

Air diverted into the aircraft bleed manifold is no longer available to drive the turbine or cool the combustion system. The loss of pneumatic energy is replaced with thermal energy (fuel) with significant temperature increase.

The following variables influence exhaust gas temperature (EGT) under bleed air load conditions:

- Aircraft demand for bleed air
- Ambient air temperature and density

Should EGT reach the limit, the ECU will reduce bleed air flow by modulating the bleed valve toward the closed position to prevent over temperature.

BLEED VALVE

The APU bleed valve controls airflow to the aircraft bleed system and protects the APU from an overtemperature condition. The valve is controlled electrically and the valve mechanism operates a butterfly valve pneumatically. When the bleed VALVE is open, the ECU adjusts the butterfly plate position to supply the correct quantity of bleed air. These adjustments are related to the required quantity of bleed air and APU EGT.

SURGE CONTROL VALVE

The surge control valve is automatically controlled by the ECU. The surge valve is commanded open when the APU is supplying electrical loads at flight altitudes above 15 000 ft. This function reduces APU surge potential when operating in an unloaded condition.

BLEED AIR AVAILABILITY

For the ECU to energize the bleed-air supply system, the APU must be more than 95% of its maximum speed.

BLEED AIR LIMITATIONS

Refer to the Approved Airplane Flight Manual for bleed air limitations.

CONTROL AND INDICATIONS

DESCRIPTION

The APU control panel contains a single three position switch with OFF, RUN and START positions.

For ground operations, a remote cutoff switch is located on the right side of the aircraft, aft of the wing and behind the electrical connection assess door.

DC electrical power provided by the APU generator is controlled from the ELECTRICAL control panel. Bleed-air services are controlled from the AIR COND/BLEED control panel.

APU system operation and fault presentation is provided on the EICAS pages. The FUEL, ECS, ELECTRICAL synoptic pages monitor the APU system and services.

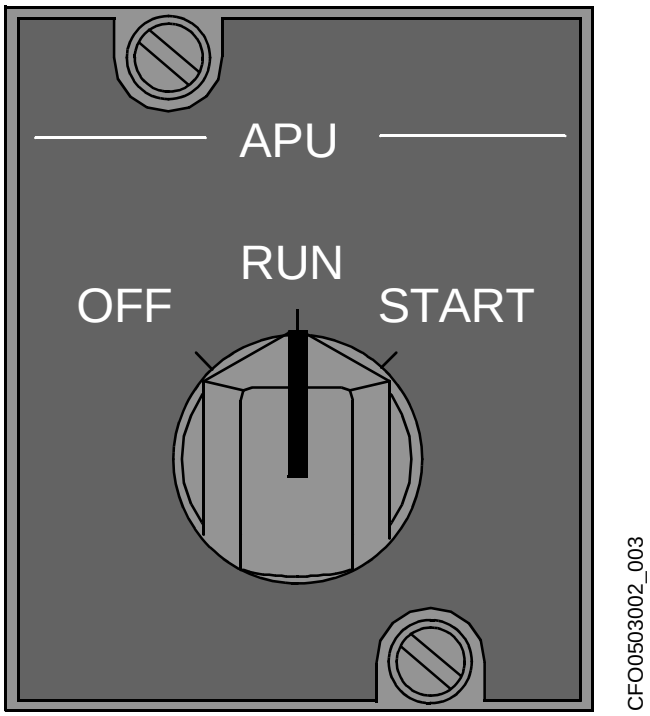

EXTERNAL POWER CONTROL PANEL

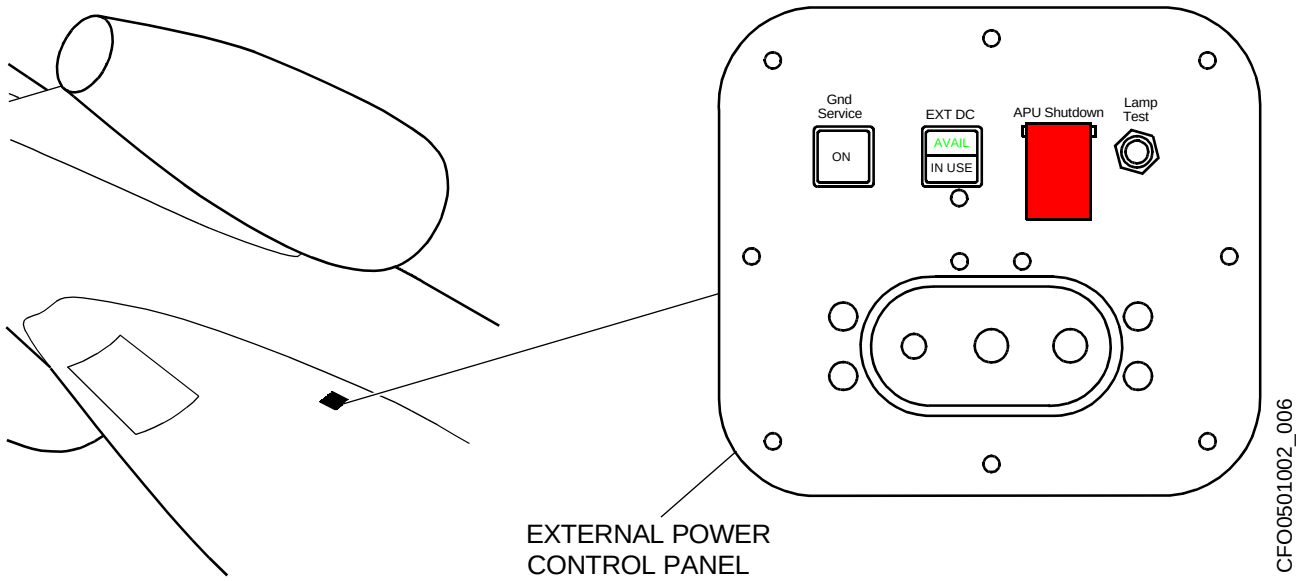

CONTROLS AND INDICATIONS (Cont)

AIR COND/BLEED CONTROL PANEL

The APU bleed selection can be controlled from the AIR COND/BLEED panel. and the bleed valve position is displayed on the ECS synoptic page.

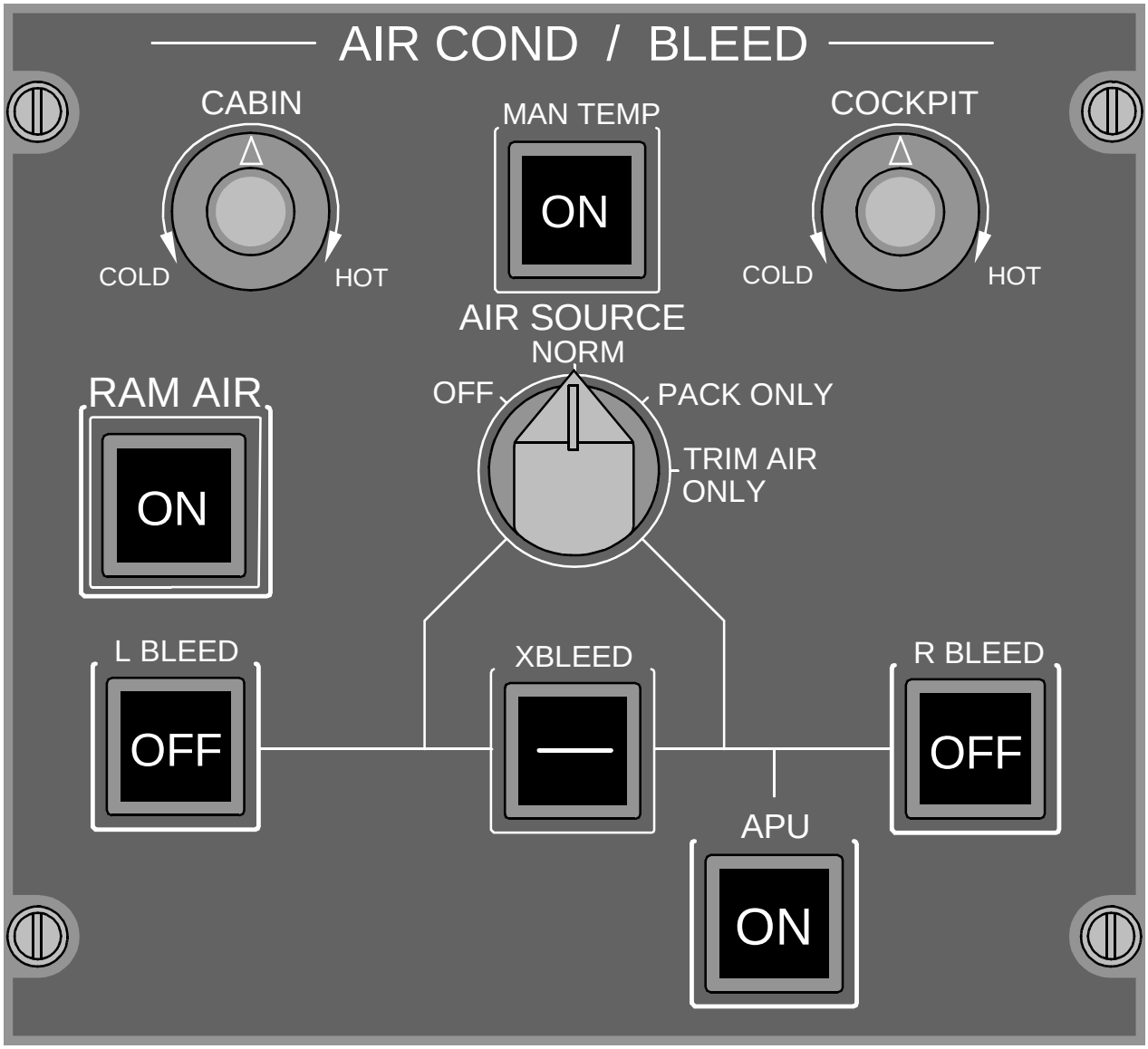

CFO0202002_003

CONTROL AND INDICATIONS (Cont)

ELECTRICAL CONTROL PANEL

The APU generator can be controlled by switches located on the ELECTRICAL control panel.

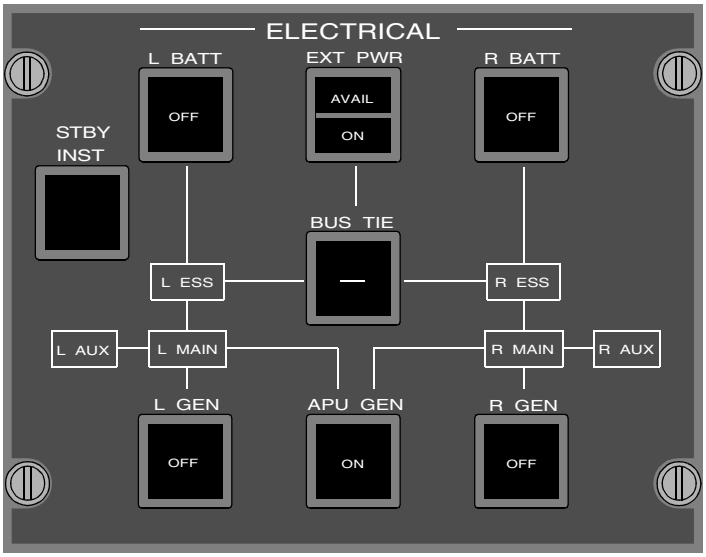

Shown with optional Hydraulic Motor Generator (HMDG) system.

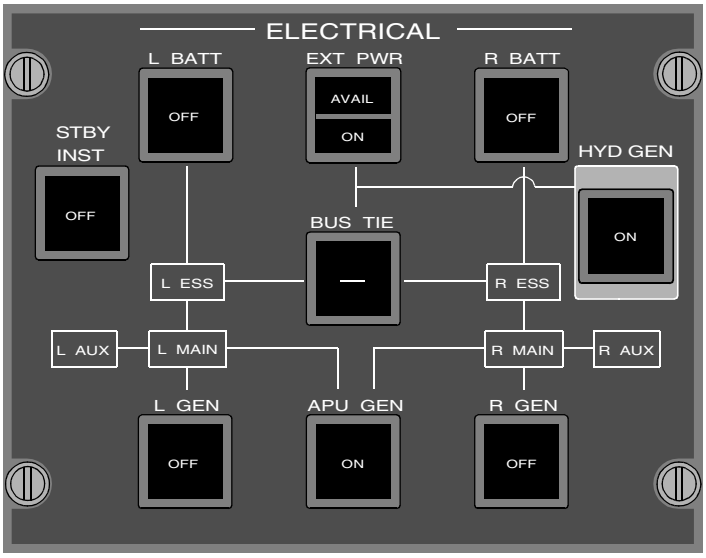

CONTROLS AND INDICATIONS (Cont)

ELECTRICAL SYNOPTIC PAGE

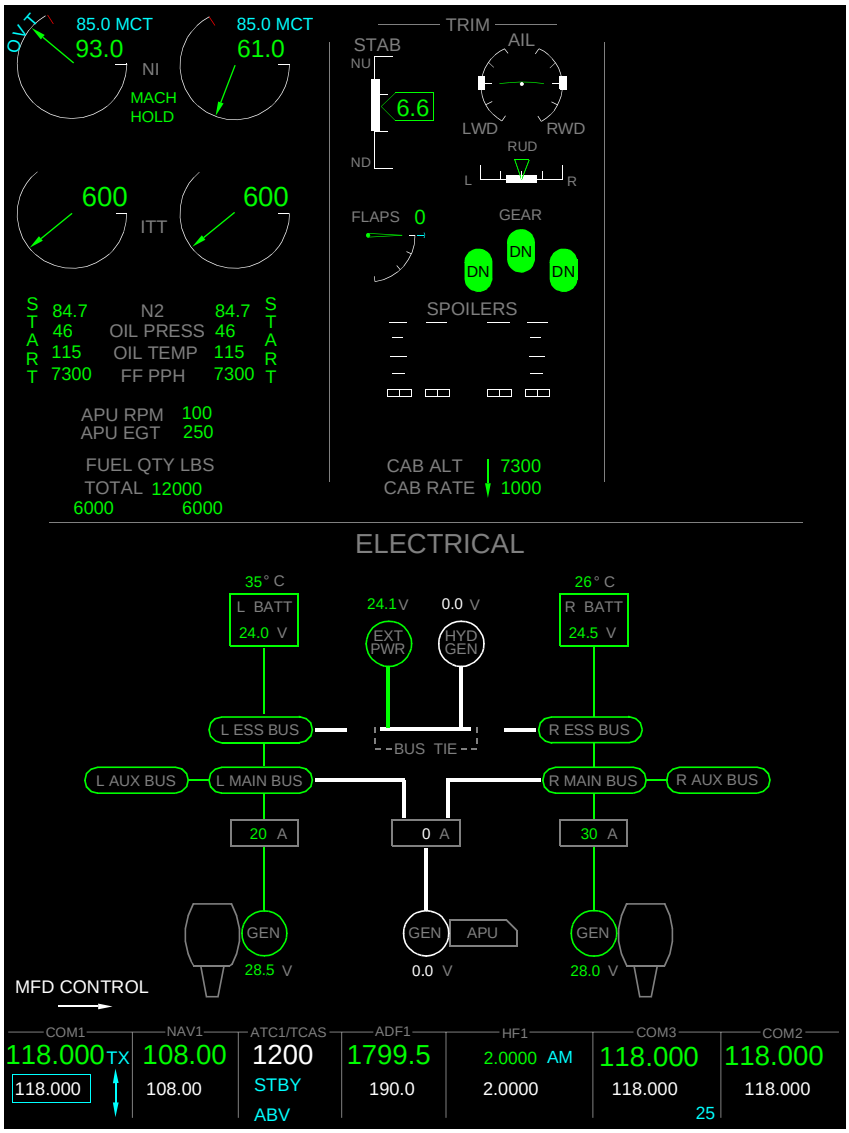

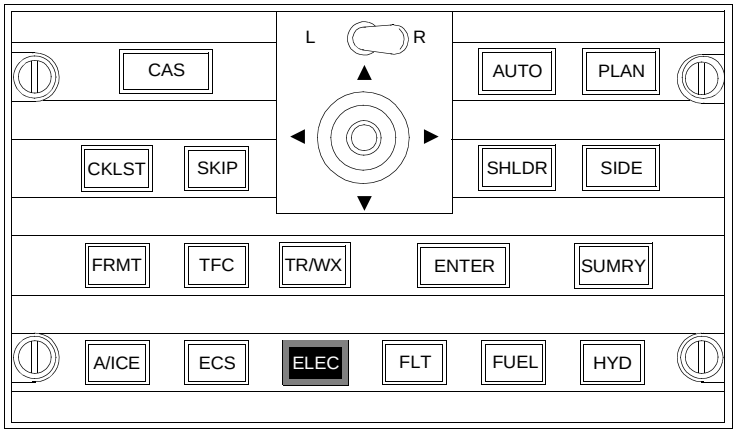

CFO0701002_007

CONTROL AND INDICATIONS (Cont)

ECS SYNOPTIC PAGE

The ECS synoptic page is used to monitor the APU load control valve.

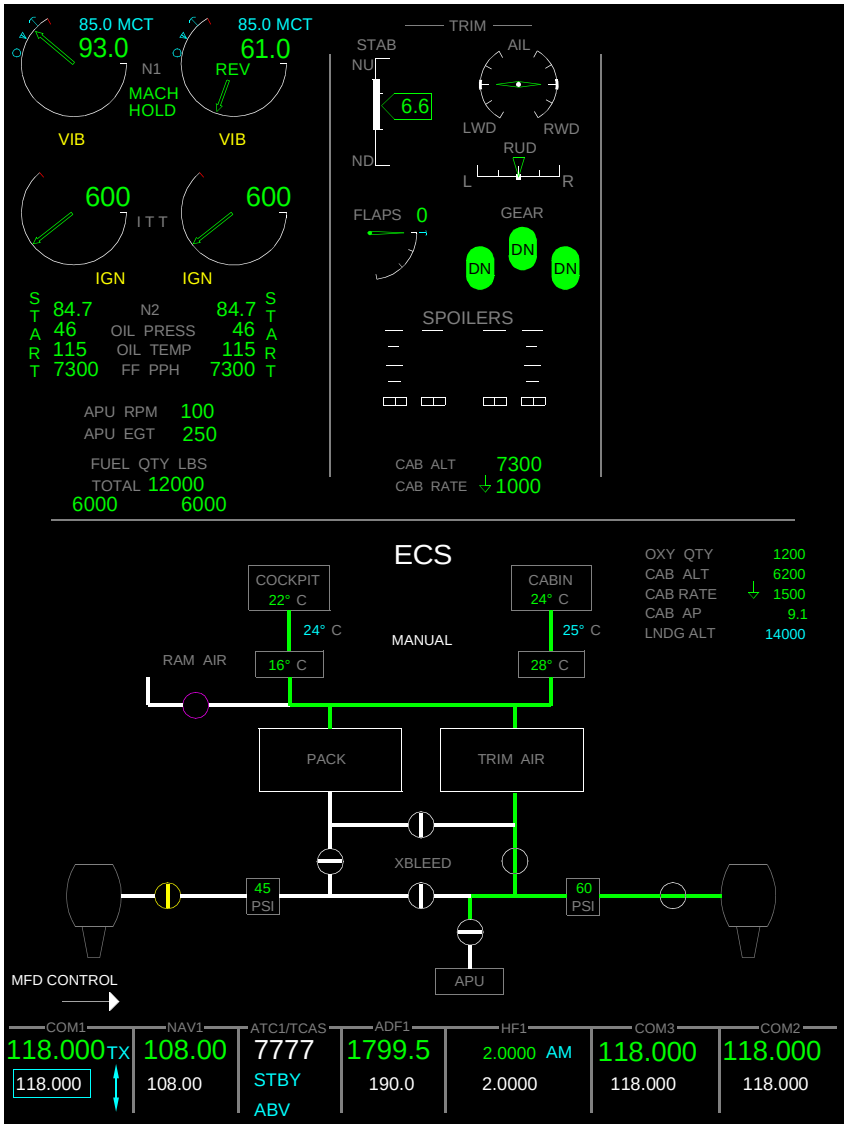

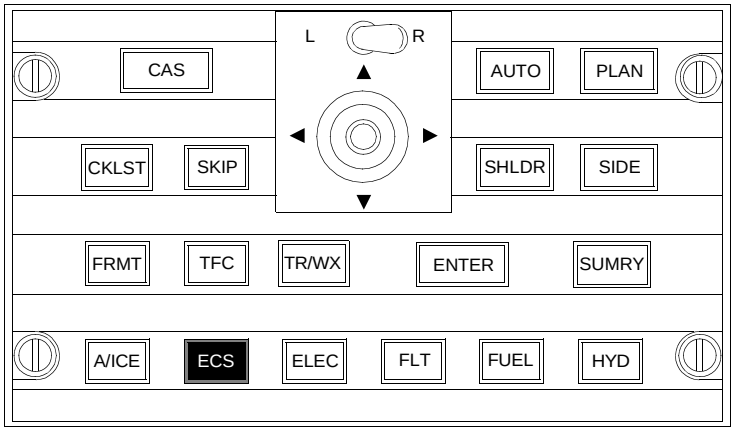

CFO0305002_010

CONTROL AND INDICATIONS (Cont)

FUEL SYNOPTIC PAGE

Operation of the APU pump and fuel SOV is monitored on the FUEL synoptic page.

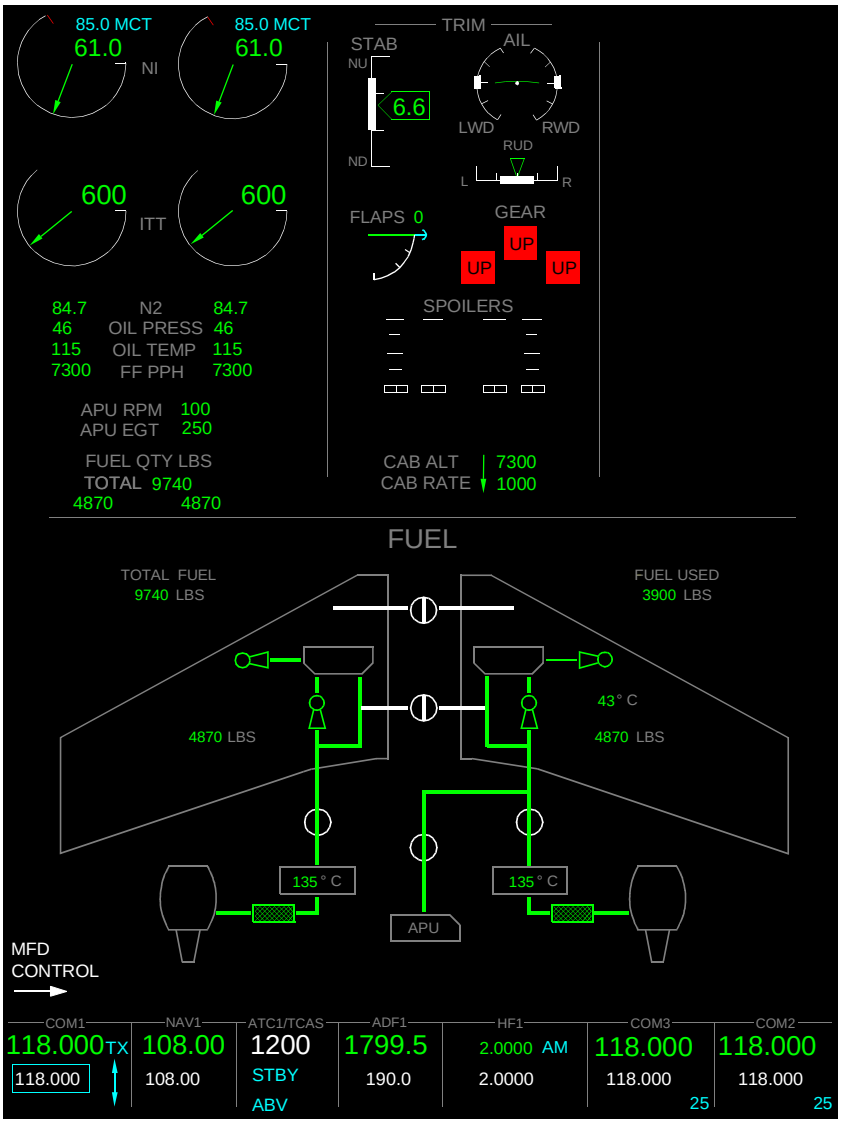

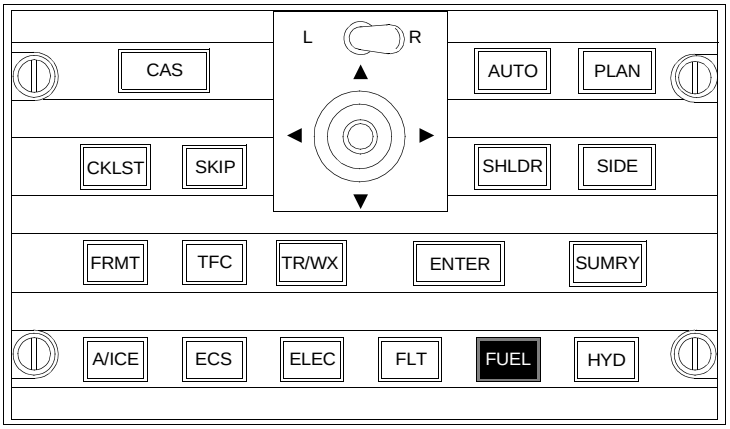

CFO0305002_013

EICAS MESSAGES

The APU system messages are displayed on the EICAS.

Inhibits, a brief description, and aural warnings (if applicable) are listed in the table below.

MESSAGE	INHIBITS	MEANING	AURAL WARNING
APU FIRE		The APU fire detection loop has activated. On the ground the system should automatically shut the APU down and activate the fire extinguisher. In flight the APU will not automatically shut down or activate the fire extinguisher	"APU FIRE"
APU OVERTEMP	TO	An APU EGT over temperature has been detected. On the ground, the APU will automatically shutdown	
APU BLEED ALT LIMIT	TO/LAND	APU bleed air has been commanded above 20 000 ft or the APU bleed modulated due to excessive EGT	
APU FUEL SOV FAIL	TO/LAND	The APU shutoff valve has failed	
APU OVERSPEED	TO/LAND	The APU has shutdown due to an overspeed	
APU OIL PRESS LOW	TO/LAND	The APU oil pressure is low while in flight	
APU OIL TEMP HIGH	TO/LAND	The APU oil temperature is high while in flight	
APU STARTER FAIL ON	TO/LAND	Power is still being supplied to the APU starter when electronic control unit is not commanding a start	
APU FAULT	TO/LAND	A fault is indicated in the APU system. One or more of the following has occurred: - The APU bleed valve has failed - The APU fuel solenoid has failed - A start is prevented - The avionics are not communicating with the APU electronic control unit - Reverse flow has been detected	
APU SHUTDOWN	TO/LAND	The auxiliary power unit electronic control unit has shut down the APU for protective reasons	

Table of Contents

Introduction 06-00-01
Description 06-01-01
Components 06-01-01
Audio Control Panels (ACPs) 06-01-01
Control Wheel TX and INPH Switches 06-01-02
Radio and Intercom Switches and Hand Microphones 06-01-03
Headset Jack Plugs 06-01-03
Hand Microphones 06-01-04
Flight Compartment Speakers 06-01-04
Maintenance Interphone Panels 06-01-05
VHF Communication 06-01-06
Description 06-01-06
General MFD Tuning 06-01-06
Display Control Panel Com Radio Control 06-01-07
Control Display Unit 06-01-08
Tuning Reversion 06-01-09
Description 06-01-09
Components and Operation 06-01-09
HF Radio Communication (Optional) 06-01-09
Description 06-01-09
Components and Operation 06-01-09
Receiver/Transmitter 06-01-09
HF Coupler 06-01-09
HF Antenna 06-01-09
Display Control Panel HF Tuning Control 06-01-10
MFD — HF Control Menu 06-01-10
CDU HF Radio Control 06-01-10
SELCAL System (Optional) 06-01-11
Description 06-01-11
Components And Operation 06-01-11
SATCOM (Optional) 06-01-11
Description 06-01-11
Components and Operation 06-01-12
Satellite Data Unit (SDU) 06-01-12
Radio Interface Unit 06-01-12
High-Power Amplifier 06-01-12
Satcom Antenna 06-01-12
Satcom Antenna Control Unit 06-01-12
Data Link (Optional) 06-01-12
Description 06-01-12
Static Wicks 06-01-13
Cockpit Voice Recorder (CVR) 06-01-14
Description 06-01-14
Components and Operation 06-01-14
CVR Control Panel 06-01-14
Area Microphone 06-01-15
Recorder Unit 06-01-15
Emergency Locator Transmitter 06-01-16
Description 06-01-16
Cabin Communication System (Optional) 06-01-16
Description 06-01-16

Table of Contents (Cont)

Flight Compartment Printer (Optional) 06-01-16
Description 06-01-16
Components and Operation 06-01-16
Flight Data Recorder (FDR) (Optional) 06-01-17
Description 06-01-17
Components and Operation 06-01-17
Recorder Unit 06-01-17
Underwater Locator Device (ULD) 06-01-17
Tri-Axial Accelerometer 06-01-17
EICAS Messages 06-01-18

INTRODUCTION

The radio communication system (RCS) contains the radios and controls used for communication purposes. It shares controls with other systems (intercom, audio, passenger address, navigation and FMS).

Two separate systems are provided for the VHF radio communication and they are designed and installed so that the failure of one system does not preclude the operation of the other system. Both systems are connected to the onside and cross-side cockpit controls, displays and audio features.

DESCRIPTION

The MFD is the primary radio tuning source for the radio communication system. Frequency, as well as the state of other control functions, is maintained in memory such that the radio does not change state or frequency due to an interrupt in power.

The CDU may also be used for tuning and control of VHF radios, either as a convenience in normal operation, or as a primary control in reversionary operation if the RSP tune switch is selected to CDU ONLY. The CDU provides integrated control of the combinations of aircraft communications radio subsystems. The CDU provides single point control of both on-side and cross-side radios from the pilot or copilot position, in both normal and CDU ONLY configurations.

COMPONENTS

The radio communication system in the Challenger 300 consists of the following:

- Two VHF communication transceivers
- Two VHF communication antennas
- HF antenna (optional)
- Two radio integration units
- Two audio control panels
- Two maintenance interphone panels

AUDIO CONTROL PANELS (ACPs)

An audio control panel (ACP) is located on both sides of the instrument panel. The ACPs allow the pilots to monitor the navigation radios, monitor and transmit on VHF and HF communication radios, the PA system and intercom system.

Receiver controls and volume adjustment for the intercom and radio are provided at each ACP. The output from each audio control panel is directed to the associated headset jacks and speaker.

The aural warning system volume is not adjustable by the crew. Audio signals from the aural warning system, TAWS, and TCAS do not go through the volume control switches.

Headphone audio is always available, with the volume control capability from any control switch.

SPKR

The SPKR audio selector enables the selected audio to be routed to the on-side crew speaker.

Warning audio can be heard with the switch in any position.

INPH

The INPH audio selector enables intercommunication between the crew positions in the cockpit and service interphone positions external to the aircraft.

VOICE/ID/BOTH

The VOICE/ID/BOTH toggle switch is a three position toggle switch that allows the pilot to separate the audio when monitoring the simulcast audio of a radio transmission. When the switch is selected to VOICE, the VOR, ILS, or ADF station morse code identifier is filtered out, allowing only the voice signal to be audible. In the ID position, only NAV and ADF identifier code will be heard. When BOTH is selected, the station morse code identifier and voice message are audible.

EMER/NORM

The EMER/NORM is a two position locking toggle switch. In the NORM position, the audio system operation is normal. In the EMER position, the audio is routed directly to the headphones.

AUDIO CONTROL PANELS (ACPs) (Cont)

O2/MASK

The O2/MASK toggle switch is a two position switch. In the NORM position, the headphone boom microphone input is active. In the O2 position, the oxygen mask microphone is active.

CFO0601002_001

CONTROL WHEEL TX AND INPH SWITCHES

The pilot and copilot's control wheels are equipped with TX/INPH momentary switches.

The TX position allows transmitting on the selected radio. The INPH position allows intercom transmissions when the interphone is selected off on the ACP.

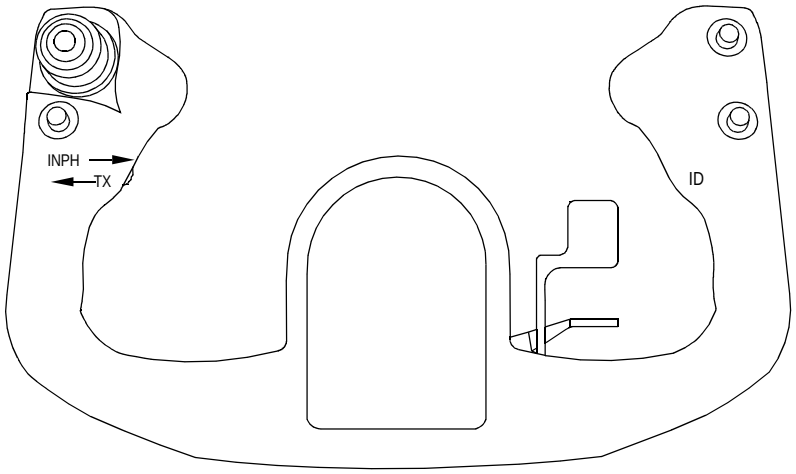

CFO0601002_010

RADIO AND INTERCOM SWITCHES AND HAND MICROPHONES

The control wheel radio/intercom switches at each pilot's station and the hand microphones allow the pilots to transmit on the communication radios or interphone.

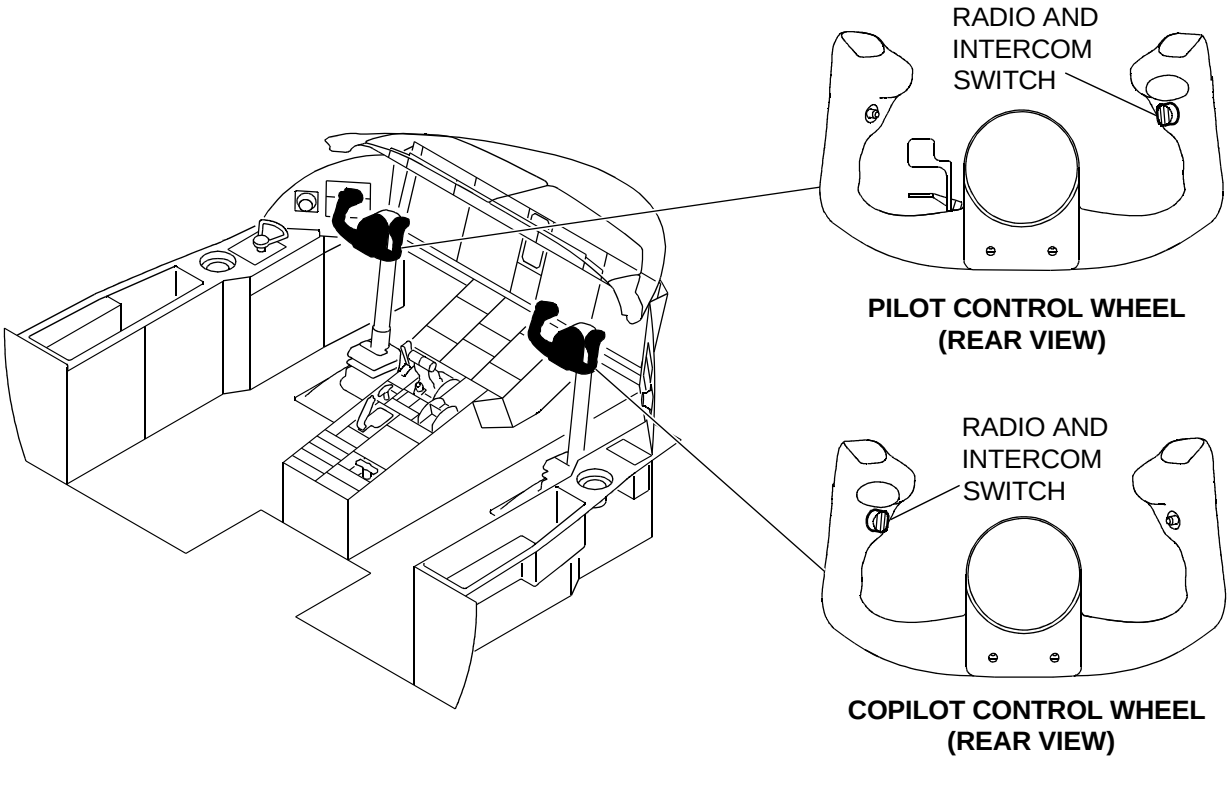

HEADSET JACK PLUGS

Headset panels are available at the two flight deck positions to connect the headsets to the audio system.

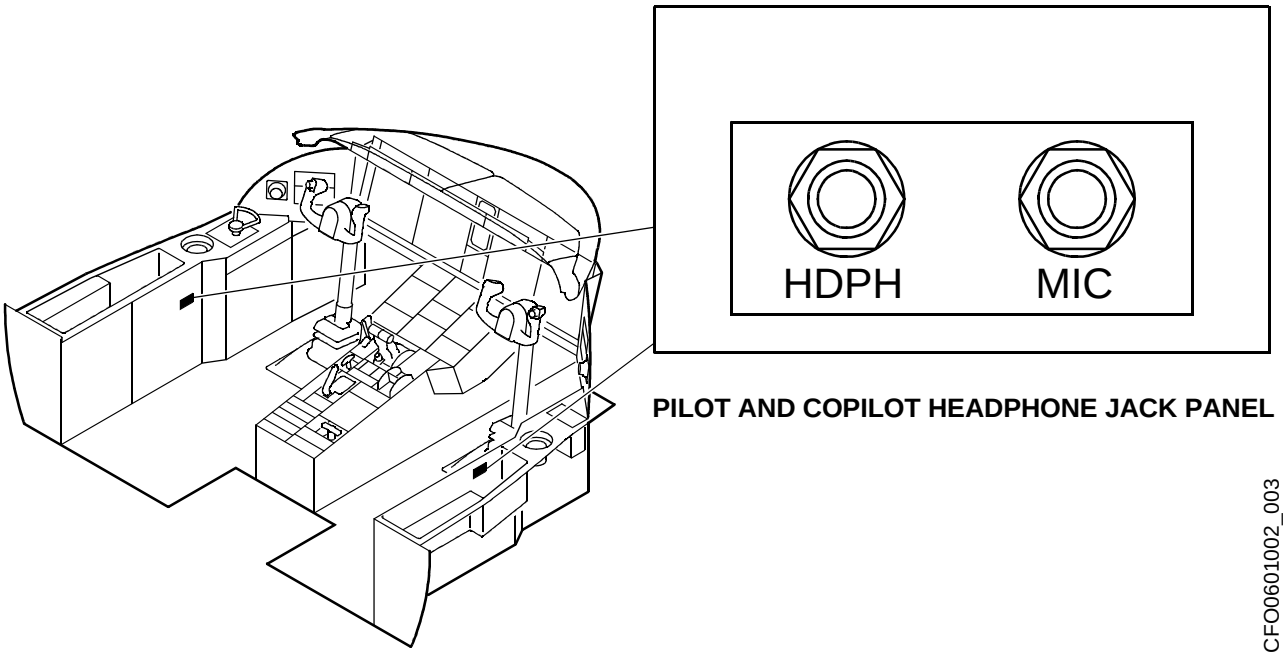

HAND MICROPHONES

Hand microphones are mounted on the control columns at each of the pilot's stations.

FLIGHT COMPARTMENT SPEAKERS

Two speakers are located overhead in the flight compartment. The speaker volume can be adjusted by rotating the SPKR knob. The speaker can be selected off by pressing the SPKR knob in.

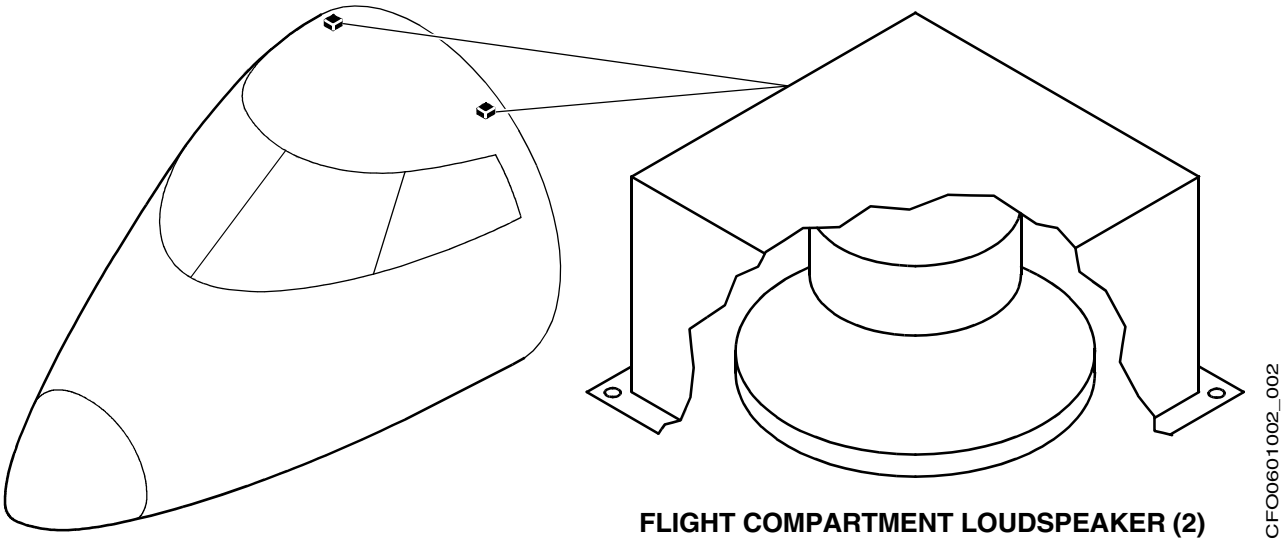

FLIGHT COMPARTMENT LOUDSPEAKER (2)

MAINTENANCE INTERPHONE PANELS

Two maintenance interphone panels are located in airplane to permit hot microphone communications to interface with the flight compartment when selected on the flight deck audio control panel. A headphone and microphone jack are installed at each location.

Microphone and headset jacks are installed at the following airplane locations:

- Left side of the aircraft in the nose compartment area (accessible behind the communication access door
- Left side of the aft equipment compartment

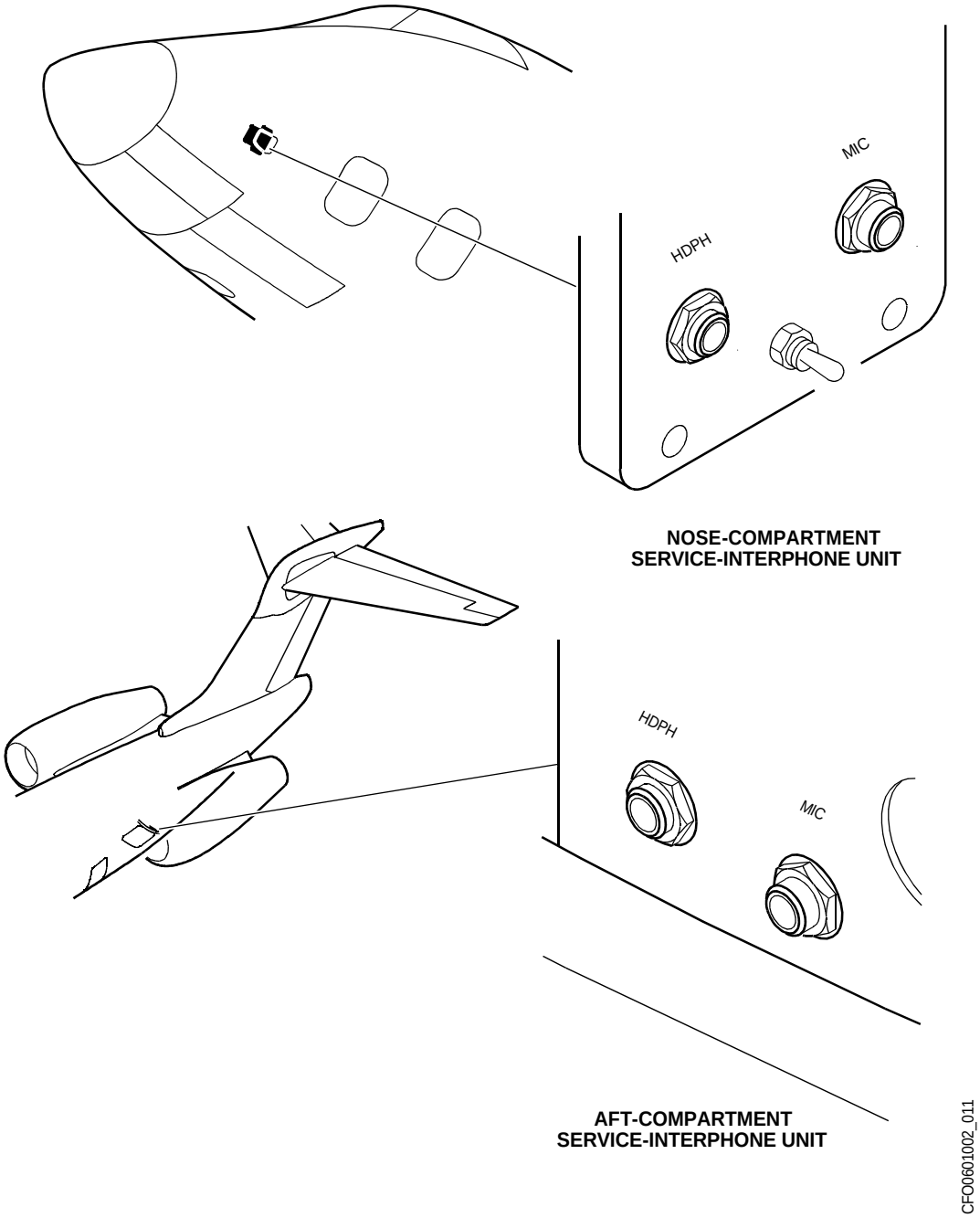

VHF COMMUNICATION

DESCRIPTION

The VHF-4000 is a remote-mounted very high frequency (VHF) communications transceiver. Two VHF radios are standard, with an option for a third VHF radio. VHF radio displays are integrated into the lower part of the left and right MFDs. The radios can be controlled through the display control panels on the glareshield or the FMS central display unit. The radios operates in the domestic VHF communications band from 118.000 through 136.991 MHz. When tuning in 25kHz increments tuning is from 118.000 to 136.975MHz. In 8.33 kHz increments, tuning is from 118.000 to 136.991 MHz.

GENERAL MFD TUNING

The MFD and the Display Control Panel (DCP) provide single point control of both the on-side and cross-side radios from the pilot's and copilot's position. The radio menu provides an "at a glance" summary of the radios as well as control for each.

1. Push the RADIO button on the DCP to show the MFD radio menu if another menu/list is active.
2. Push the 1/2 button if necessary to alternately select the side 1 radios and the side 2 radios.
3. Turn the MENU knob on the DCP to move the selection box on the radio menu to the radio (COM, NAV, ATC/TCAS, etc.) frequency or channel that is to be tuned.
4. Turn the TUNE knob on the DCP to tune the desired frequency or channel.
   - The larger (outer knob) tunes the digits to the left of the decimal point.
   - The smaller (inner knob) tunes the digits to the right of the decimal point.
5. To activate the new frequency/channel:
   - Push the transfer button in the center of the tune knob.
6. To change modes, adjust squelch, and other non-tuning functions of a radio:
   - Turn the MENU knob to move the selection box to the appropriate radio (COM1, NAV2, ATC/TCAS, etc.)
   - Push the RADIO button on the DCP to select the submenu.
   - Turn the MENU knob to move the selection box on the submenu.
   - Turn the DATA knob to change the mode or select an option)i.e, tune mode, squelch level, traffic mode, etc.)
   - Push the PUSH SELECT button to step through available options. (the PUSH SELECT button acts the same as the DATA knob in selecting options)
   - To exit the sub menu, push the RADIO button. The display returns to the radio menu.

NOTE: The menu is automatically removed 20 seconds after the last activity of the MENU, DATA, or PUSH SELECT knob, or when another menu or list button is pushed.

VHF COMMUNICATION (Cont)

DISPLAY CONTROL PANEL COM RADIO OPERATION

The radio menu provides basic COM radio tuning control. The COM submenu provides control display for other COM radio operation. Each COM radio installed on the aircraft has its own submenu. The active frequency, recall frequency, and squelch status displays are identical to the display on the radio menu.

The current control location is indicated by a cyan control box. The default location is the last tuned communication radio (VHF or HF). After 20 seconds of inactivity, the cyan control box returns to the default location.

Selecting the 1/2 button results in the cross side radios being displayed and the radio legends being displayed in yellow.

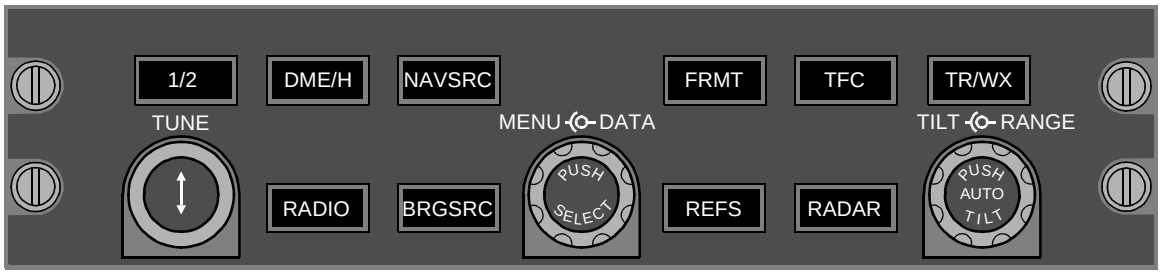

- Push the RADIO button on the DCP to show the radio menu on the MFD if another menu/list is active
- Turn the MENU knob on the DCP to move the selection box to the desired radio (COM 1, COM 2, COM 3 if installed) display on the radio menu.
- Push the RADIO button on the DCP to show the appropriate submenu on the MFD
- The following operations are performed on the submenu
  - Change the SQUELCH mode
    - Turn the MENU knob to move the selection box to the SQUELCH control.
    - Turn the DATA knob or push the PUSH SELECT button to select the squelch ON or OFF
  - Change the frequency spacing for radio tuning
    - Turn to MENU knob to move the selection box to the FREQ SEL control.
    - Turn the DATA knob or push the PUSH SELECT button to select 8.33 or 25 kHz spacing for tuning
  - Select the COM TEST mode
    - Turn the MENU knob to move the selection box to the TEST control.
    - Turn the DATA knob or push the PUSH SELECT button to select the TEST mode
  - Change the COM 3 mode (only if Voice/Data option is enabled)
    - Turn the MENU knob to move the selection box to the COM 3 MODE control.
    - Turn the DATA knob or push the PUSH SELECT button to select the VOICE or DATA mode. When DATA mode is selected, the squelch annunciation, squelch status, transfer arrow, frequency selections 8.33 and 25, and TEST selection do not show on the COM 3 CONTROL menu

VHF COMMUNICATION (Cont)

DISPLAY CONTROL PANEL COM RADIO OPERATION (Cont)

When the FREQ SEL setting is changed to 8.33, the recall COM radio frequency display resolution on the MFDs is three decimal places for that radio. If the prior recall frequency had two decimal places, the MFD adds the appropriate 0 or 5 to the frequency value. When the FREQ SEL setting is changed to 25, the recall COM radio frequency display resolution on the MFDs is 2 decimal places for that radio. If the prior recall frequency had an 8.ss kHz frequency, the MFD changes the frequency to the next lower valid 25 kHz frequency value. If the prior recall frequency was a 2 digit 25 kHz frequency, the third decimal digit is removed.

CONTROL DISPLAY UNIT (CDU)

The control display unit (CDU) is also capable of tuning the communication radios, ADF receivers, and ATC transponders.

CFO1101002_010

CDU COM RADIO TUNING

The CDU provides tuning control of both the on-side and cross-side radios. Data entry to the CDU is made through the scratch pad and the line select keys. Information is entered on the scratchpad, then transferred to the appropriate location with the adjacent line select key. Messages show if the information entered is not appropriate for the data field. Access to CDU tuning is accomplished through the TUNE page.

To tune the radio using the CDU execute the following steps:

1. Push the TUN key on the CDU to show the TUNE page.
2. To tune a radio directly, do one of the following steps:
   - Enter the frequency into the scratch pad, then push the line select key for the appropriate radio.
   - Enter a preset channel number (1 through 20) into the scratch pad, then push the line select key for the appropriate radio.
   - NAV radios only: Enter the three-letter identifier for the NAVAID, then push the line select key for the appropriate radio (NAV 1 or NAV 2).
3. To show the submenu for a particular radio (to set presets, select modes, etc.), push the line select key for the radio when the scratch pad is empty.
4. To return to the TUNE page from a CONTROL submenu, push the line select key for the radio or push the TUN key.

VHF COMMUNICATION (Cont)

TUNING REVERSION

DESCRIPTION

The tune reversion switch is located on the reversion panel located on the center pedestal. The COM 1 121.5 MHz switch allows the pilot to directly transmit on the emergency frequency 121.5 MHz via COM 1. The MFD ONLY position on the TUNE switch allows the radio to be tuned by using the display control panel only. The NORM position on the TUNE switch allows the radio to tuned using either the display control panel or the central display unit. The CDU ONLY position on the TUNE switch allows the radio to be tuned by using the central display unit only.

COMPONENTS AND OPERATION

Tuning reversion allows the pilot to select the MFDs or CDUs as the master tuning control. Normally, the MFD provides the master tuning control. However, if the MFD fails or is reverted to a compressed PFD format, radio tuning through that MFD is no longer available. Tuning reversion allows the pilot to select either the MFD or the CDU as the master tuning control for the on-side radios. When the TUNE knob on the Reversion Selection Panel is set to MFD ONLY, the MFDs ignore tuning commands from the CDUs. Additionally, the CDU TUNE page is blank when the TUNE knob is set to MFD ONLY. When the TUNE knob is set to CDU ONLY, the CDUs ignore tuning commands from the MFDs and the MFD radio Menus is blanked. When the TUNE knob is in the COM 1 121.50 position, tuning is as normal (MFD is the master tuning control), but the COM 1 radio is forced to the emergency frequency 121.50.

HF RADIO COMMUNICATION (OPTIONAL)

DESCRIPTION

The optional high-frequency radio provides long-range communication within the frequency range of 2.0 to 29.9999 MHz. The HF radio has 280 000 communication channels together with six emergency and 16 programmable preset channels.

The HF system operates in simplex or duplex mode as:

- Upper side band voice (UV)
- Upper side band data (UD)
- Lower side band voice (LV)
- Lower side band data (LD)
- Amplitude modulation equivalent (AME)
- Continuous wave (CW)

In simplex mode the radio transmits and receives on the same frequency. Simplex is the most common transmission/reception mode.

The duplex mode is similar to using a cellular phone in that you actually transmit on one frequency and receive on another. It is used to relay radio signals between stations or communicate with marine facilities.

COMPONENTS AND OPERATION

RECEIVER/TRANSMITTER

The receiver/transmitter is installed in the aft equipment bay. The receiver/transmitter controls all the functions associated with signal transmission and reception, power generation and fault detection.

HF COUPLER

The HF coupler is located near the receiver/transmitter. The coupler tunes the system by matching the impedance of the antenna to the transmitter. Matching the impedance allows maximum power transfer to the antenna during transmissions.

The coupler tunes to the new frequency when the transmit switch is momentarily pushed. The tuning time for a new frequency is nominally less than one second but can take up to a maximum of six seconds. A 1000 Hz tone is heard in the headset and stops when tuning is complete. Impedance data for the previous last 50 frequencies tuned are stored in memory and reused whenever a frequency is reselected. This minimizes the tuning times for frequently used frequencies.

HF ANTENNA

The HF antenna is classified as a conformal-type antenna in that it is an integral part of the leading edge of the vertical stabilizer.

HF RADIO COMMUNICATION (Cont)

DISPLAY CONTROL PANEL HF TUNING CONTROL

1. Push the RADIO button on the DCP to show the radio menu on the MFD if another menu/list is active.
2. Turn the MENU knob on the DCP to move the selection box to the HF radio (HF1 or HF2) display on the radio menu.
3. Push the RADIO button on the DCP to show the HF CONTROL submenu on the MFD.
4. The following operations are performed on the HF CONTROL submenu.

- Select the HF tune mode.
  - -Turn the MENU knob to move the selection box to the MODE control
  - -Turn the DATA knob or push the PUSH SELECT button to select FREQ, EMER, or MAR mode. Each click of the DATA knob or push of the button selects the next mode option
- Select the HF transmission mode.
  - -Turn the MENU knob to move the selection box to the MODE control
  - -Turn the DATA knob or push, the PUSH SELECT button to select SIMP (simplex) or DUP (duplex) transmission mode
- Select HF emission mode.
  - -Turn the MENU knob to move the selection box to the emission mode control (beneath the MODE control)
  - -Turn the DATA knob or push the PUSH SELECT button to select LV (lower voice single sideband), UV (upper voice single sideband), or AM (amplitude modulation) mode. Each click of the DATA knob or push or the button selects the next mode option
- Select the HF squelch level.
  - -Turn the MENU knob to move the selection box to the SQUELCH control
  - -Turn the DATA knob or push the PUSH SELECT button to select the squelch level. Each click of the DATA knob or push of the button selects the next squelch level option
- Select the HF power level.
  - -Turn the MENU knob to move the selection box to the POWER control
  - -Turn the DATA knob or push the PUSH SELECT button to select the squelch level. Each click of the DATA knob or push of the button selects the next squelch level option
- Select the HF TEST mode.
  - -Turn the MENU knob to move the selection box to the TEST control
  - -Turn the DATA knob or push the PUSH SELECT button to select the TEST mode

MFD — HF CONTROL MENU

The HF CONTROL menu provides control for HF radio modes other than those available through the Radio Menu. Each HF radio installed on the aircraft has its own HF CONTROL menu. The active frequency, recall frequency, and squelch status that show on the left side of the HF CONTROL menu are identical to the HF display on the radio menu.

The TUNE MODE control selects the HF tuning mode as follows:

1. Tune directly by tuning a frequency (FREQ).
2. Select an emergency channel (EMER).
3. Select a maritime (optional) channel (MAR).

CDU HF RADIO TUNING

To tune the HF radio using the CDU, do the following steps:

1. Push the TUN key on the CDU to show the TUNE page.
2. Select page 2 by selecting NEXT button (depending on radio options, there will be 1 or 2 pages).
3. Enter the frequency into the scratchpad, then push the line select key for the appropriate radio.
   or
4. Enter a preset channel number (1 thru 20) into the scratchpad, then push the line select key for the appropriate radio.
5. To show the submenu for a particular radio (to set presets, select modes, etc.), push the line select key for the radio when the scratchpad is empty.
6. To return to the TUNE page from a submenu, push the line select key for the radio or push the TUN key.

HF RADIO COMMUNICATION (Cont)

PRESET PAGE

In the tune mode, PRESET allows the pilot to select and configure 16 predetermined combinations of transmit and receive frequencies and transmission modes on the CDU PRESET pages or on the MFD radio control pages. Five CDU preset pages are available for each HF1 (HF1 and HF2), depending on the type of preset data and selected HF mode of operation. Selection of the preset mode changes the HF preset frequency to the last selected numbered preset selection.

SIMPLEX/DUPLEX OPERATION

The simplex/duplex mode selection is applicable to all modes of transmission. Simplex mode allows transmission and reception to occur on only one frequency and in only one direction at a time. Both parties cannot receive at the same time as they are transmitting. The duplex mode is actually half-duplex mode allowing transmission and reception on separate frequencies, but still only one direction at a time.

SELCAL SYSTEM (OPTIONAL)

DESCRIPTION

The optional SELCAL system allows the crew to maintain continuous VHF or HF radio watch with a ground facility without the burden of listening to the assigned radio.

COMPONENTS AND OPERATION

The selective calling (SELCAL) system monitors the pre-assigned SELCAL VHF or HF frequency. Each SELCAL equipped aircraft is assigned its own four-letter SELCAL code. When the ground station wants to talk to the aircew, they transmit the aircraft's assigned SELCAL code.

When the VHF or HF radio receives the code, the SELCAL decoder sends a signal to the EICAS data concentrator unit to display the cyan advisory message. The advisory message identifies which of the VHF or HF systems received the message. An aural "SELCAL" alert is sounded to advise the crew of the incoming call.

The SELCAL message on EICAS is removed when the radio/transmit switch is activated for the VHF or HF radio that received the message.

SATCOM (OPTIONAL)

DESCRIPTION

The satellite communication (SATCOM) system (optional), makes possible voice and data communications in most locations in the world (except in the farthest polar regions). SATCOM is also better than other long-range communication systems in connectivity, voice quality, reliability, and traffic volume capacity.

The SATCOM option consists of three primary systems:

- Space system
- Ground system (ground earth stations (GESs), service providers, public telephone systems, etc.)
- Aircraft earth station (AES)

The space system is a series of satellites that act as a two-way relay between the AES and GES. The satellites are in geosynchronous orbits 22 300 mi (36 000 km) above the equator. The satellites operate between 75 degrees north and south latitude and there is an overlap in the areas of coverage.

The ground system has GESs and local/long distance telephone networks. The GESs interchange data between the space system and the public or private telephone and data networks for worldwide communications.

The AES operates within the satellite communications system of the international maritime satellite organization. The AES uses the satellite to give digital communication between the aircraft and the GES. The AES access the international maritime satellite organization satellites with L-band communications. The satellites then transmit and receive the data with C-band to the GES. The GES can transmit packet data (such as ARINC communications addressing and reporting system (AFIS), that provides data on aircraft conditions, departure time, arrival time, or flight delay time). The GES can also transmit telephone communications (such as voice, fax, and PC modem data).

SATCOM (OPTIONAL) (Cont)

The SATCOM system interfaces with a dedicated antenna subsystem to provide satellite communications. A minimum of three satellite communications channels are required: two voice channels and one data channel. One voice channel is dedicated to the flight compartment, and another voice channel is dedicated to the office in the sky (OITS) telephone. The data channel is assigned for either the airborne flight information system (AFIS) or the OTIS facsimile or modem.

The factory option of the SATCOM consists of a six channel SATCOM system and antenna. Components include:

- Satellite data unit
- High power amplifier
- Radio frequency unit
- High gain antenna.
- Cabin communication system interface via handset
- Airborne data link system
- PC data and fax capability

COMPONENTS AND OPERATION

SATELLITE DATA UNIT (SDU)

Provides interface to all airplane avionics and contains the location of the applicable satellites and rate/frequency translation for two-voice communication.

RADIO INTERFACE UNIT

The radio interface unit provides three additional simultaneous voice communication channels when operated in conjunction with the SDU.

HIGH-POWER AMPLIFIER

The high-power amplifier provides rate/frequency power amplification on the L band signals generated by the satellite data unit or radio frequency unit to a power level required for transmission to the satellite.

SATCOM ANTENNA

The SATCOM system is equipped with one antenna and is located on top of the vertical stabilizer. The SATCOM antenna is directional and mechanically controlled.

The SATCOM antenna transmits and receives data to the SATCOM LNA/duplexes and the SATCOM antenna control unit (ACU).

SATCOM ANTENNA CONTROL UNIT

The antenna control unit processes signals from the SATCOM antenna to calculate location. The ACU transmits data to the SATCOM antenna to control the antenna direction. The ACU gives built-in-test equipment and location data to the SATCOM transceiver.

DATA LINK (OPTIONAL)

DESCRIPTION

Data link operation is via the VHF, HF, or SATCOM and is controllable from the FMS CDU. The system utilizes the same data loading unit as the FMS with air-ground-air and air-to-air capabilities. Crew advisory messages are displayed on the CDU scratch pad.

STATIC WICKS

Static wicks are installed to discharge static electricity, thereby reducing radio interference. They are installed at the following locations:

- Winglets/wingtips and ailerons
- Elevators, rudder, vertical stabilizer, horizontal stabilizer and tail cone

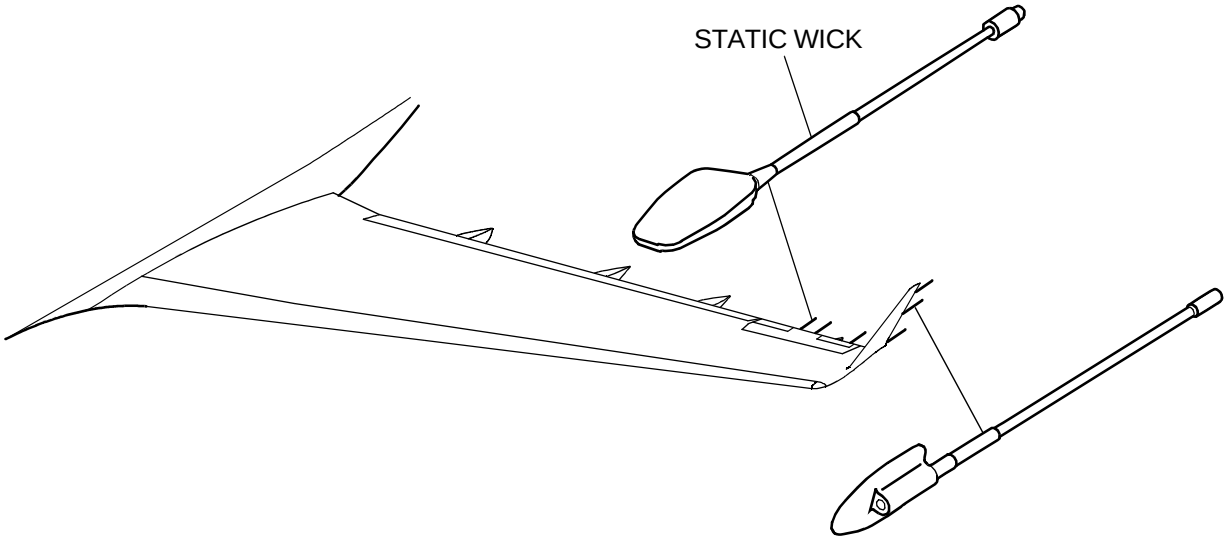

CFO0601002_005

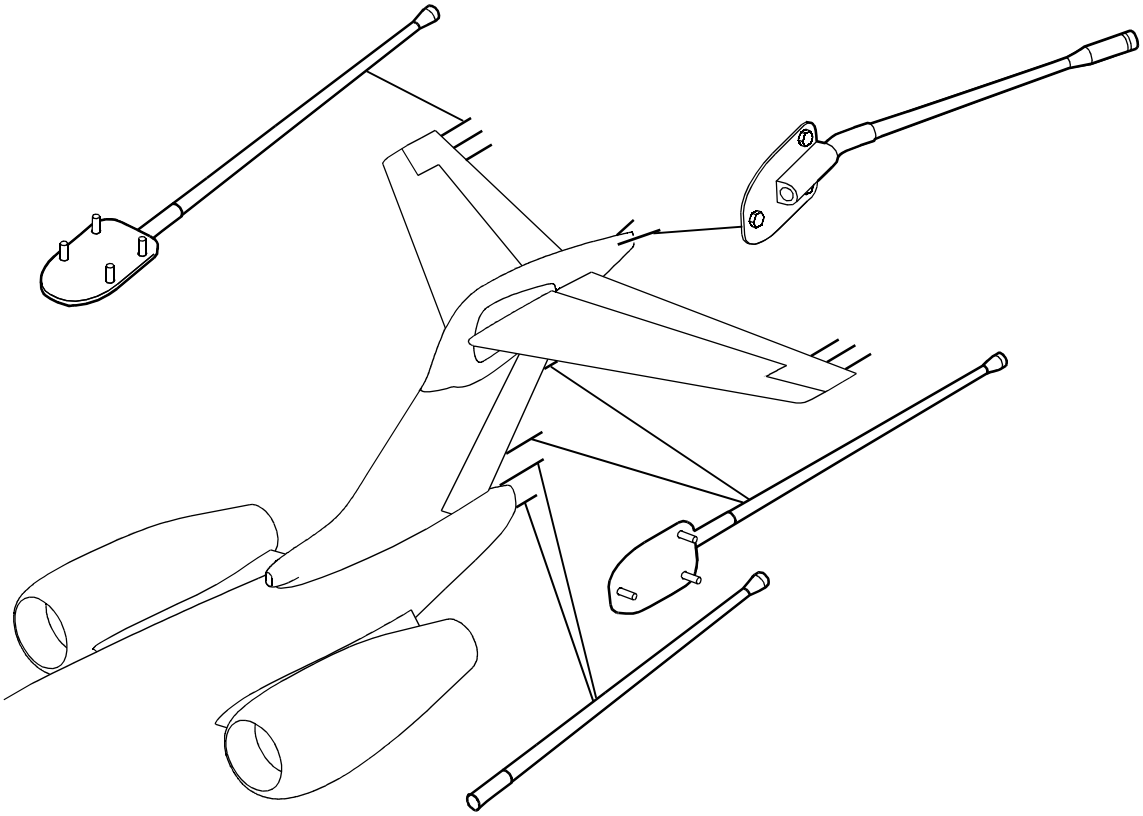

O0601002_006

COCKPIT VOICE RECORDER (CVR)

DESCRIPTION

The solid state cockpit voice recorder (CVR) consists of a flight deck control panel and a recorder unit that is painted bright orange with reflective stripes. The CVR is mounted in the aft equipment bay.

COMPONENTS AND OPERATION

The CVR receives four channels of audio data from the audio electronics control unit. The recorded information includes all audio received and transmitted from the following locations:

- Pilot station
- Copilot station
- Area microphone (center of glareshield)
- Observer station

CVR CONTROL PANEL

The CVR control panel is located on the center pedestal and is used to test the CVR system.

The CVR control panel contains:

- A green TEST button and green indicator lamp
- Headset jack
- ERASE button

The CVR starts recording as soon as electrical power is applied to the aircraft. When the aircraft experiences impact deceleration, electrical power is removed from the recorder to prevent erasure of the stored audio data.

The CVR TEST button, when selected, performs an internal test of the CVR system. A successful test is indicated by illumination of the green indicator lamp.

When the erase button is pushed, all recorded information will be erased as long as the aircraft is on the ground, the hydraulic systems are pressurized and the parking brake is set.

CFO0601002_008

COCKPIT VOICE RECORDER (CVR) (Cont)

AREA MICROPHONE

The area microphone picks up sounds and voices in the flight compartment and is located just above the liquid compass on the windshield center post.

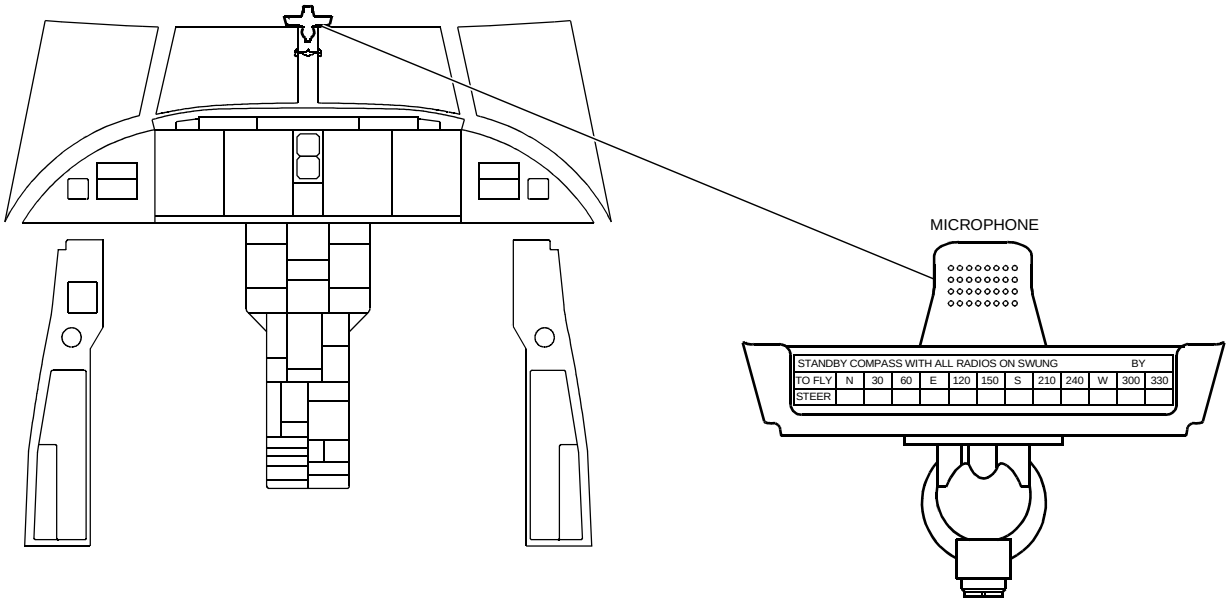

AREA MICROPHONE

CFO0601002_007

RECORDER UNIT

The recorder unit is housed inside a crash survivable container. Access to the container is through the aft equipment bay.

The unit records data in a solid state non-volatile memory and stores 120 minutes of recorded information. An underwater locator device (ULD) is installed on the front of the recorder. The ULD emits a pulsed acoustic signal into the water after ditching of the aircraft. The ULD sonar beacon is capable of transmitting for up to 30 days after activation.

UNDERWATER ACOUSTIC BEACON

As a further detection aid, the recorder has an underwater locator beacon. the beacon is mounted on the crash survivable memory unit front bracket to facilitate reading of the batter replacement date as well as for quick removal and replacement of the beacon. The unit is equipped with a battery having a life expectancy of 6 years.

EMERGENCY LOCATOR TRANSMITTER

DESCRIPTION

The emergency locator transmitter (ELT) is a self contained battery operated unit, located in the top left side of the aft fuselage. When the aircraft is subjected to excessive longitudinal forces, the ELT is automatically activated and transmits on 121.5 (VHF), 243.0 MHz (UHF) and 406.025 MHz. When the ELT is transmitting, an ELT ON (C) CAS message is illuminated.

The flight deck ELT switch is normally set to ARM. The ON position is for system test, or to manually activate the ELT. The RESET position resets the ELT.

An ELT buzzer is installed in the rear fuselage section near a venting cutout. It is installed so that the buzzer alarm will not distract the flight crew, but will be audible during ground operations and servicing when the engines are not operating.

CFO0601002_009

CABIN COMMUNICATION SYSTEM (OPTIONAL)

DESCRIPTION

The cabin communication system option provides a private automatic branch exchange switching network. This network routes voice and data communications for up to nine optional active devices (handsets/FAXs/modems/data link, etc.) in the airplane and provides two air-to-ground channels. The systems includes connections of basic telephone/telecomputing equipment to UHF antenna and SATCOM links. If a data link device is installed on the airplane, the cabin communication system has the capability to communicate with the data link device using an internal modem.

COMPONENTS AND OPERATION

The digital radio components consist of: one UHF antenna, a duplexer and one airborne radio telecommunication unit.The digital handset is located in the flight compartment and has a backlit LCD display and telephone style keypad to dial calls and select various options. A credit card reader (for optional billing) is built into the handset and a two-button increase/decrease volume control (side of handset) is also installed.

Refer to the Magnastar C-2000 user guide CA1030 for description/function and operation of the system.

FLIGHT COMPARTMENT PRINTER (OPTIONAL)

DESCRIPTION

The optional flight compartment printer is installed in the copilot side console. The printer has ARINC 429 and standard PC interfaces and is capable of full format and graphic printing of information from Central Aircraft Information Maintenance System (CAIMS) and DATALINK.

COMPONENTS AND OPERATION

The printer can be used to print selected messages and weather data sent to it via the airborne data link system. The printer is also used by the central aircraft information maintenance system to print out certain maintenance faults and status information.

FLIGHT DATA RECORDER (FDR) (OPTIONAL)

DESCRIPTION

The solid state flight data recorder (FDR) unit is located in the tail section of the aircraft. The (FDR) records aircraft flight parameters. The FDR includes a digital FDR, an underwater locator device (ULD), and a tri-axial accelerometer.

COMPONENTS AND OPERATION

RECORDER UNIT

The recorder unit is housed inside a crash survivable container. Access to the container is through the aft equipment bay.

The unit records data using a solid state non-volatile memory. The unit records the last 25 hours of critical aircraft and flight parameter data. An underwater locator device (ULD) is installed on the front of the recorder and emits a pulsed acoustic signal into the water after ditching of the aircraft.

The ULD beacon is capable of transmitting up to 30 days after activation. The FDR starts to record when one of the following occurs:

- STROBE/BEACON switch is in the BEACON or STROBE position
- Weight-off-wheels as sensed by the proximity sensing electronic unit (PSEU)

If the aircraft experiences impact deceleration, electrical power is removed from the recorder. Removal of power prevents the erasure of the stored digital information.

EVENT (button)

Pressing the EVENT button on the ENGINE panel places an event marker in the FDR data. This can be used when required during system functional testing as required by some regulatory agencies.

UNDERWATER LOCATOR DEVICE (ULD)

The ULD, mounted on the FDR front panel, is a battery-operated underwater acoustic pulse generator. The ULD transmits when submerged under water.

TRI-AXIAL ACCELEROMETER

The tri-axial accelerometer is used for acceleration measurements. It contains three separate seismic sensors that measure vertical, lateral, and longitudinal acceleration near the center of gravity of the aircraft. This data is sent to the DCUs where it is formatted for the FDR.

EICAS MESSAGES

Communication messages are shown on the EICAS. In the table below is a list of communication system messages. A brief explanation of each message is provided.

MESSAGE	INHIBITS	MEANING	AURAL WARNING
CVR FAIL	TO/LAND	The cockpit voice recorder has failed	
FDR FAIL	TO/LAND	The flight data recorder has failed	
FDR FAULT	TO/LAND	The longitudinal, lateral or normal accelerations parameters in the flight data recorder are inoperative. It may be possible to clear this message	
SELCAL HF 1 SELCAL HF 2	TO/LAND	The SELCAL code has been received on HF 1 or HF 2	“SELCAL”
SELCAL VHF 1 SELCAL VHF 2 SELCAL VHF 3	TO/LAND	The SELCAL code has been received on VHF 1, 2, or 3	“SELCAL”
SELCAL DATALINK	TO/LAND	The SELCAL code has been received on DATALINK	“SELCAL”
ELT ON		Pilot status that ELT is transmitting	

Table of Contents

Introduction 07-01-01
Electrical System 07-01-03
Description 07-01-03
Components and Operation 07-01-03
Engine and APU Generators 07-01-03
External Power 07-01-03
Batteries 07-01-05
Power Centers 07-01-05
Secondary Power Centers 07-01-06
Hydraulic Motor Driven Generator (HMDG) (Optional) 07-01-06
Circuit Breaker Panels 07-01-06
Cockpit Floor Heaters 07-01-06
CB 1 Pilot Circuit Breaker Panel (Typical) 07-01-07
CB 2 Copilot Circuit Breaker Panel (Typical) 07-01-08
CB 3 Left Side Equipment Rack Circuit Breaker Panel (Typical) 07-01-09
CB 4 Right Side Equipment Rack Circuit Breaker Panel (Typical) 07-01-10
CB 5 Left DC Power Center Circuit Breaker Panel (Typical) 07-01-11
CB 6 Right DC Power Center Circuit Breaker Panel (Typical) 07-01-11
Direct Current System 07-01-12
DC Electrical System 07-01-12
DC Primary Architecture 07-01-13
Controls and Indications 07-01-14
External Power Control Panel 07-01-14
Electrical Summary Page 07-01-15
Electrical Control Panel 07-01-16
Electrical Synoptic Page 07-01-17
EICAS Messages 07-01-18

INTRODUCTION

Primary DC electrical power is provided by two engine-driven generators and one APU-driven generator supplying 28 volt power to a split bus electrical system. An automatic electrical load-shedding system prevents generator overload and prolongs battery duration during a single or dual generator failure. Two main batteries power essential avionics, communication, and instrumentation. A separate battery powers the independent standby instrument system. An optional hydraulically driven electrical generator is available to provide electrical power generation in the event all engine and APU generator power is lost.

A ground power unit can be connected to the aircraft to provide electrical power if desired.

The only AC electrical power requirements are for passenger convenience. This power is provided by inverters located in the aft accessory compartment.

The electrical system incorporates a split, multiple bus system for power distribution interconnected by contactors, fuses, and circuit breakers. These react automatically to isolate a malfunctioning circuit.

INTRODUCTION (Cont)

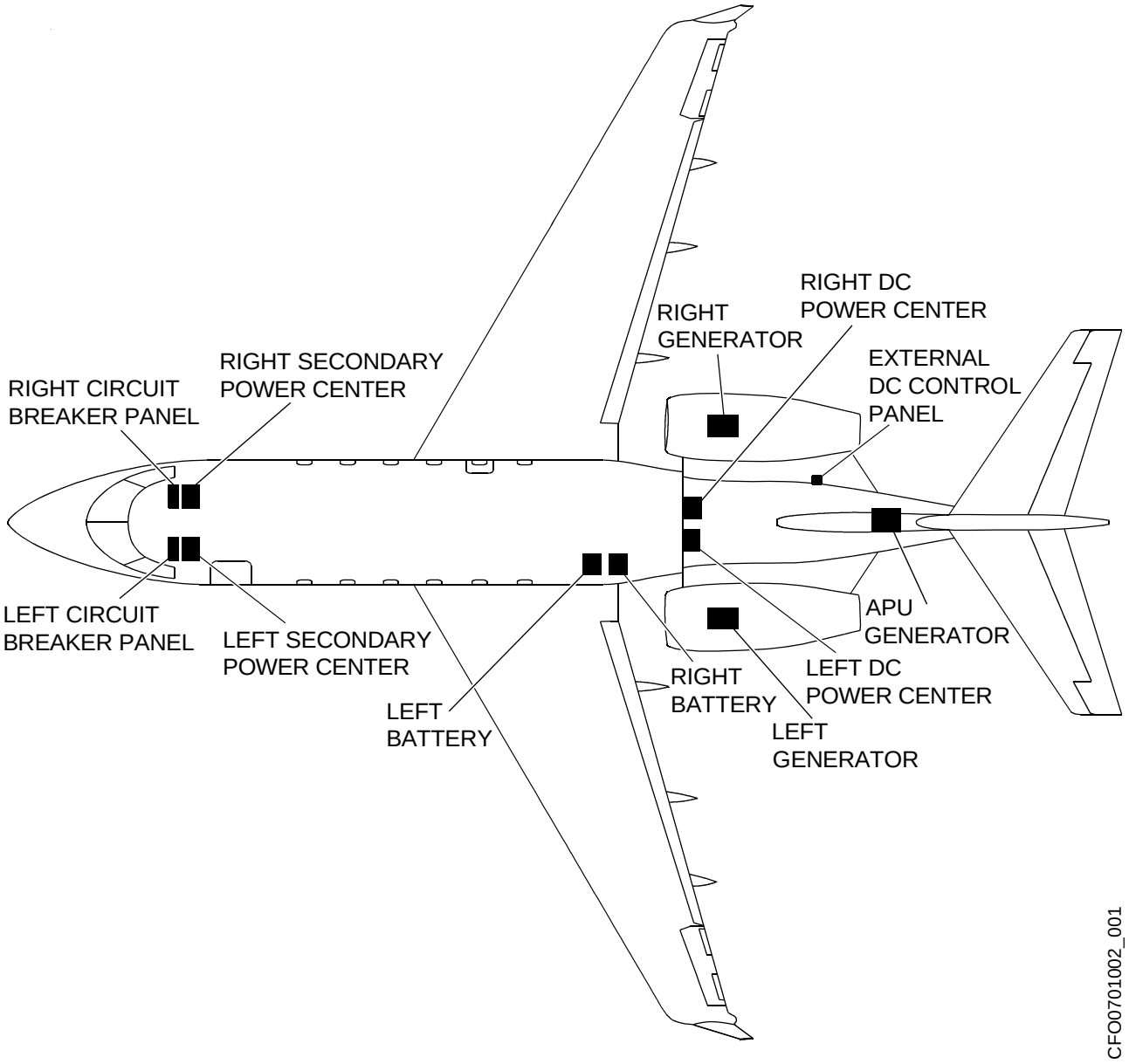

ELECTRICAL SYSTEM

DESCRIPTION

The Challenger 300 electrical system is a 28 vdc system and divided into two main functions:

- Power generation system
- Power distribution system

The electrical power generation system consists of the following power sources:

- Two main generators provide electrical energy to feed the loads under normal operation in flight and ground operations. Either one of the engines provides sufficient generator power for normal operations
- One APU generator can share electrical loads with the engine generators at medium and low altitudes or provide enough electrical generation capability to replace one or both engine generators during failure conditions
- Two onboard batteries that feed the essential loads under emergency conditions when the generators are inoperative, and on the ground for feeding all loads
- One standby instrument battery located in the nose landing gear bay area. It provides power to the standby instrument system for approximately 5 hours when fully charged
- One optional hydraulic motor driven generator with a non-time limited source of electrical power in the event total generated power is lost
- Additonally, an external DC power source for ground operation

The electrical power distribution system consists of four distribution boxes:

- Two of the four electrical distribution boxes are direct current power centers (DCPC). These are located in the aft equipment bay of the aircraft. They are fed by the power sources listed above and their function is to switch electrical power to the distribution buses and then distribute this power to loads in the aft fuselage of the aircraft
- The other two electrical distribution boxes are secondary power centers. They are located in the equipment rack in the front fuselage of the aircraft and are fed by the distribution buses of the DCPCs. They distribute electrical power to the loads in the front fuselage of the aircraft
- Two circuit breaker panels are located in the cockpit. They are fed by the distribution buses of the secondary distribution centers and distribute electrical power to loads which require pilot access to the associated circuit breaker.
- The electrical system is electrically and physically segregated into two channels. External DC power and the APU generator are arranged to connect to these two channels

COMPONENTS AND OPERATION

ENGINE AND APU GENERATORS

Two engine driven generators, one on each engine accessory section, provide the normal source of 28 volt power to the airplane. A third identical generator is installed on the APU. All three generators are air cooled and include an integrated fan. The engine-driven generators automatically come online after the engines are running, the GPU is disconnected, and the EXT PWR switch on the electrical control panel is depressed, changing the annunciation from ON to AVAIL. The generators are limited to 12 kVA (400 amp) and the nominal output voltage is 29.5 volts.

When at least two generators are online, the bus tie is normally open. The left generator recharges the left main battery, and the right generator recharges the right main battery. The generators supply DC power to all DC powered equipment on the airplane under normal conditions.

EXTERNAL POWER

Ground power can be connected to the airplane through a receptacle located on the lower right side of the fuselage just below the engine pylon. The anti-flash contactor that connects the output of the GPU to the aircraft electrical system closes only if the voltage and polarity are within acceptable limits. The acceptable voltage limits are approximately 24 to 32 volts. The GPU should be regulated to 28 vdc and limited to 1500 amps.

The EXT PWR switch is located on the cockpit electrical control panel. The green AVAIL caption on the EXT PWR switch illuminates if the GPU is within acceptable parameters. Depressing the EXT PWR switch when the green AVAIL light is illuminated closes the GPU antiflash contactor, connecting the GPU. The ON caption illuminates, and the green AVAIL caption extinguishes. The GPU may be deselected with the same switch.

The bus tie contactor automatically closes when a GPU is connected and selected ON. The entire DC system is powered, assuming the EXT PWR is selected ON.

ELECTRICAL SYSTEM (Cont)

EXTERNAL POWER (Cont)

Neither the engine-driven nor the APU-driven generators come online with the GPU selected ON. If they are on when the GPU is selected, they drop offline. Engine-driven generators automatically come online after engine start, but not if the GPU is selected ON. The aircraft main batteries do not have to be on to close the GPU antiflash contactor.

GPU output voltage is indicated on the SUMMARY page and on the ELECTRICAL system synoptic display. No indication of amps drawn from the GPU is provided.

With the external power cable connected, the following indications are annunciated on the ELECTRICAL synoptic display. EXT PWR symbol and line are white when AVAIL, green when selected on, and removed when disconnected. These appear whenever a GPU cable is connected to the airplane, and a voltage of greater than 5 vdc is sensed by the power monitor.

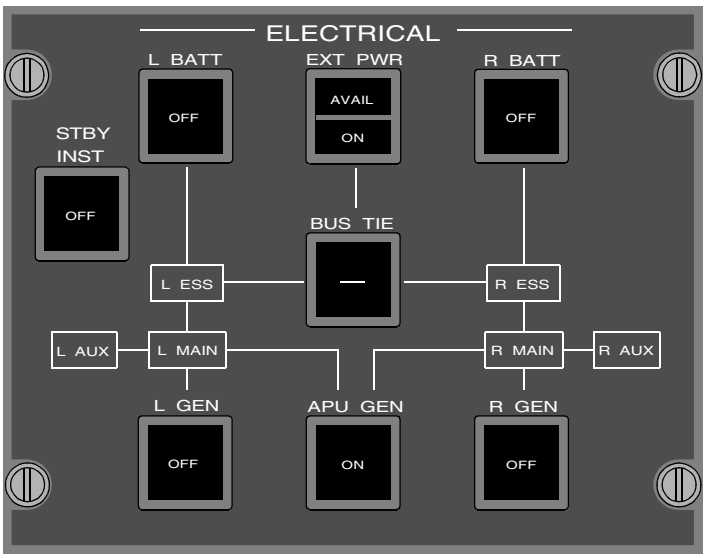

Electrical panel shown with the optional Hydraulic Motor Driven Generator (HMDG) system.

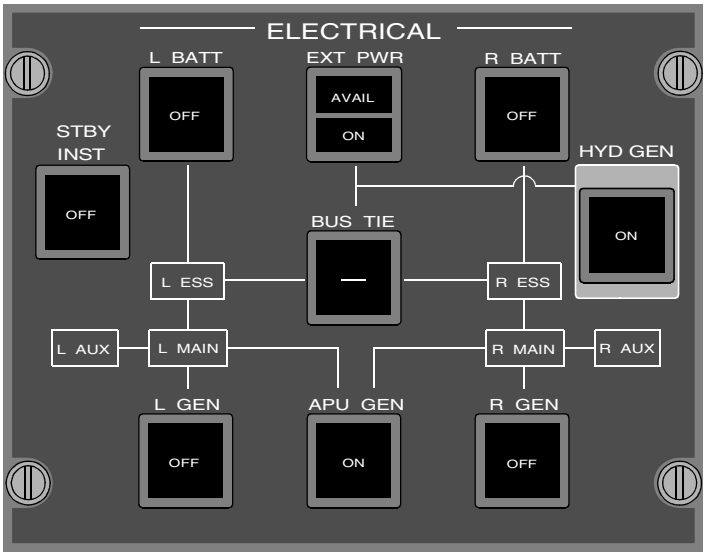

ELECTRICAL SYSTEM (Cont)

BATTERIES

The batteries are located in the fuselage fairing aft of the left wing. During APU start, the right battery is isolated from the rest of the aircraft and provides power to the APU starter. The bus tie closes and the left battery provides power to the rest of the aircraft for emergency operation during total generator failure. They also provide power to the battery buses even when the batteries are selected off.

The standard batteries are 24 volt nickel-cadmium (NICAD) rated at 44-amp hr.

Gases produced by the main batteries are vented overboard through two tubes that extend from the battery cases.

The batteries are connected to the essential buses when the contactors are closed. When a generator is online, it is connected to the main buses and charges the battery.

When the batteries are connected on their corresponding buses in parallel with the generators, they are charged by the generators.

Individual battery voltages and temperatures can be read on the ELECTRICAL and SUMMARY synoptic displays on the MFD.

During a total generator failure, the aircraft batteries provide power for necessary essential equipment for a limited duration.

Standby Instrument power is supplied by a dedicated 24 vdc battery. The standby instrument is activated by a separate STBY INST switch located on the ELECTRICAL power panel.

If the batteries are allowed to significantly discharge prior to bringing a generator on-line, the charging current may be large enough to result in a APU GEN OVERLOAD, or L (R) GEN OVERLOAD caution CAS message for a short time as the batteries recharge.

POWER CENTERS

The two DC power centers (left and right) provide the following functions:

- Protect the loads from abnormal electrical power quality
- Control and reconfigure the distribution system in response to manual switching or when a fault occurs. This reconfiguration shall ensure the supply of the buses in accordance with an established priority relating to the power sources available
- Ensure the coupling of the two channels on the ground when only batteries or external DC power are available, or in flight when only one generator is available
- Control the automatic load shedding
- Isolate the faulted distribution buses when a short circuit occurs on a feeder or on a bus
- Distribute the electrical power to loads located in the aft of the aircraft
- Distribute the electrical power to secondary power centers located in the front fuselage of the aircraft
- Protect distribution cables from short circuit

Additionally, there is an Auxiliary Power Center for the APU Generator.

ELECTRICAL SYSTEM (Cont)

SECONDARY POWER CENTERS

The secondary power centers are located on the equipment rack in the front fuselage of the aircraft. They are fed by the distribution buses of the direct current power centers and distribute electrical power to the loads in the front fuselage of the aircraft.

HYDRAULIC MOTOR DRIVEN GENERATOR (HMDG) (OPTIONAL)

The optional HMDG system provides a non-time limited source of electrical power in the event total generated power is lost. The HMDG is powered by the left hydraulic system. It is rated for 65 amp and consists of a hydraulic motor that drives a DC generator. An ELEC HYD GEN ON (S) message will be displayed on the EICAS when the system is activated.

The HMDG is operated by the HYD GEN switch on the ELECTRICAL cockpit control panel.

CIRCUIT BREAKER PANELS

Two circuit breaker panels are located in the cockpit and are fed by the distribution buses of the secondary power centers. They distribute power to the loads which require pilot access to the associated circuit breaker.

Two other circuit breaker panels are located in the left and right equipment racks. They are also fed by the distribution buses of the secondary power centers.

COCKPIT FLOOR HEATERS

Four cockpit floor heaters are installed on the flight compartment floor, one on each side of the two control columns. Each is covered by a scuff plate to prevent damage to the heat strips. There are no pilot operated controls, as a temperature limiting circuit keeps the temperature between 68 °F (20 °C) and 95 °F (35 °C). Also an internal thermal switch prevents the floor heaters from an overheat condition.

The pilot's floor heater is connected to the left equipment rack circuit breaker panel, and the copilot's floor heater is connected to the right equipment rack circuit breaker panel.

CB1 PILOT CIRCUIT BREAKER PANEL (TYPICAL)

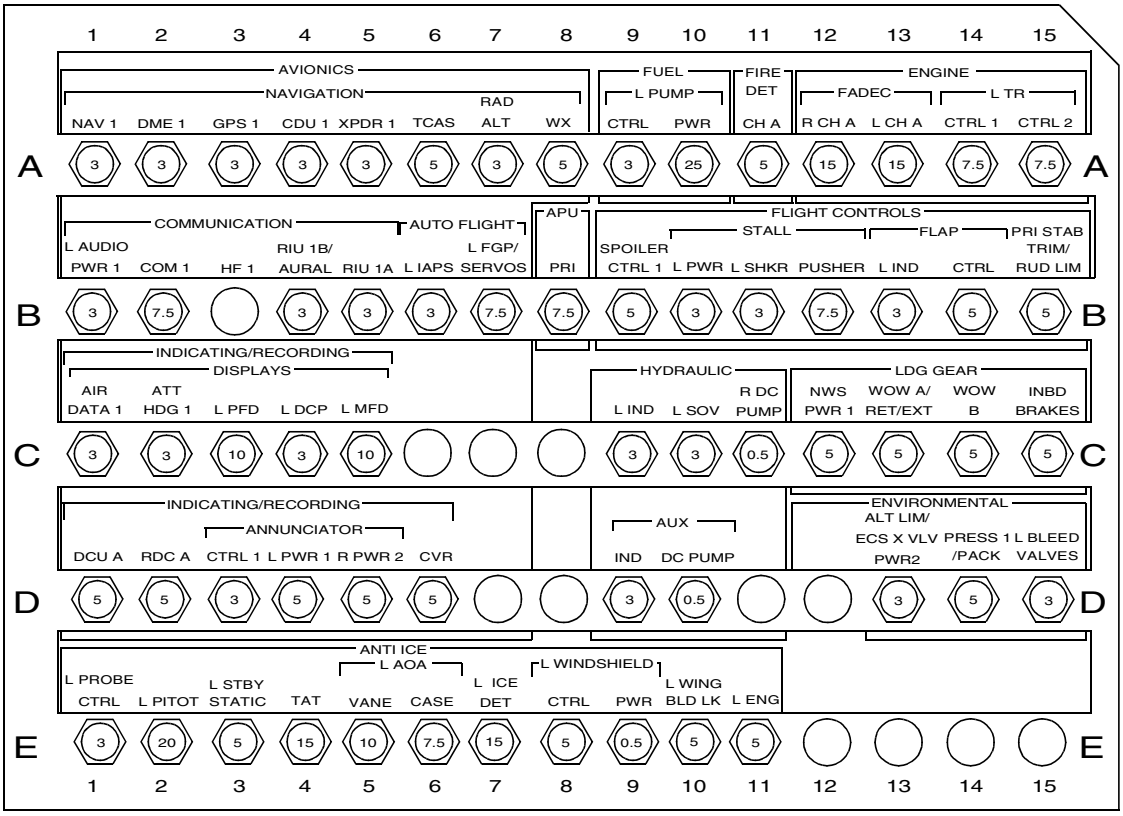

CFO0106002_006

ELECTRICAL SYSTEM (Cont)

CB2 COPILOT CIRCUIT BREAKER PANEL (TYPICAL)

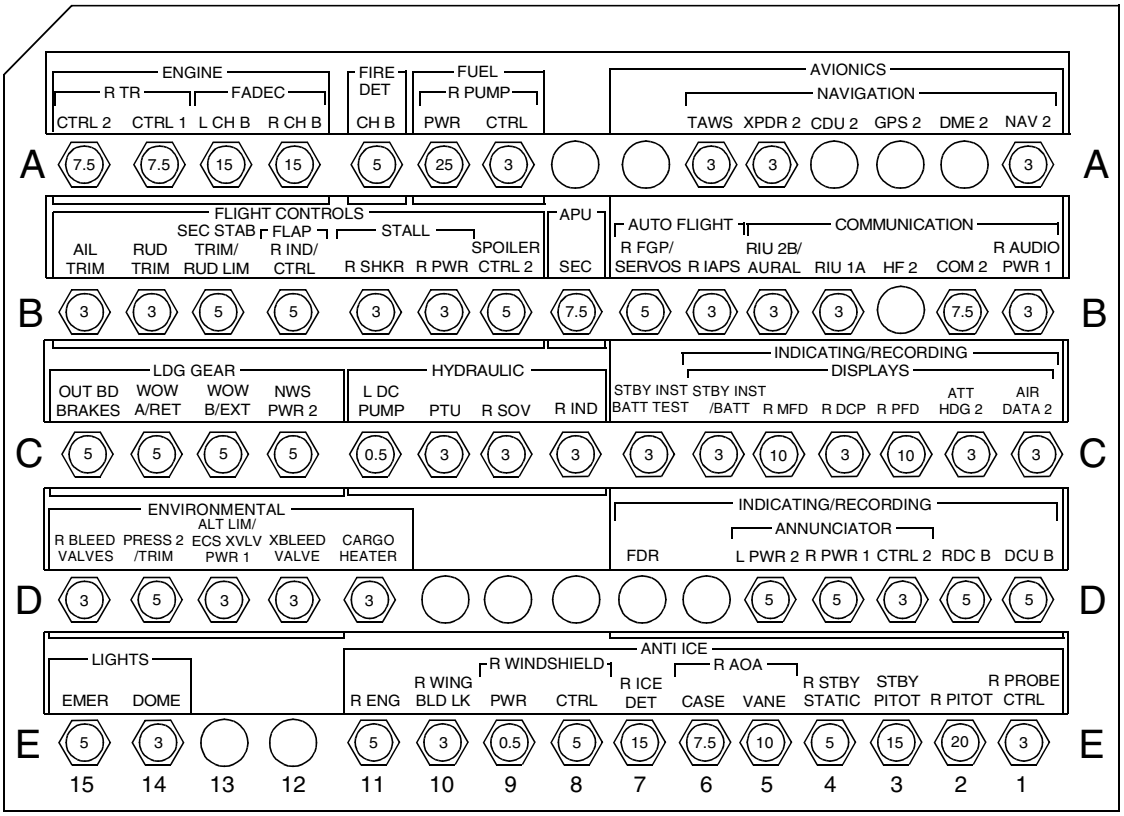

ELECTRICAL SYSTEM (Cont)

CB3 LEFT SIDE EQUIPMENT RACK CIRCUIT BREAKER PANEL (TYPICAL)

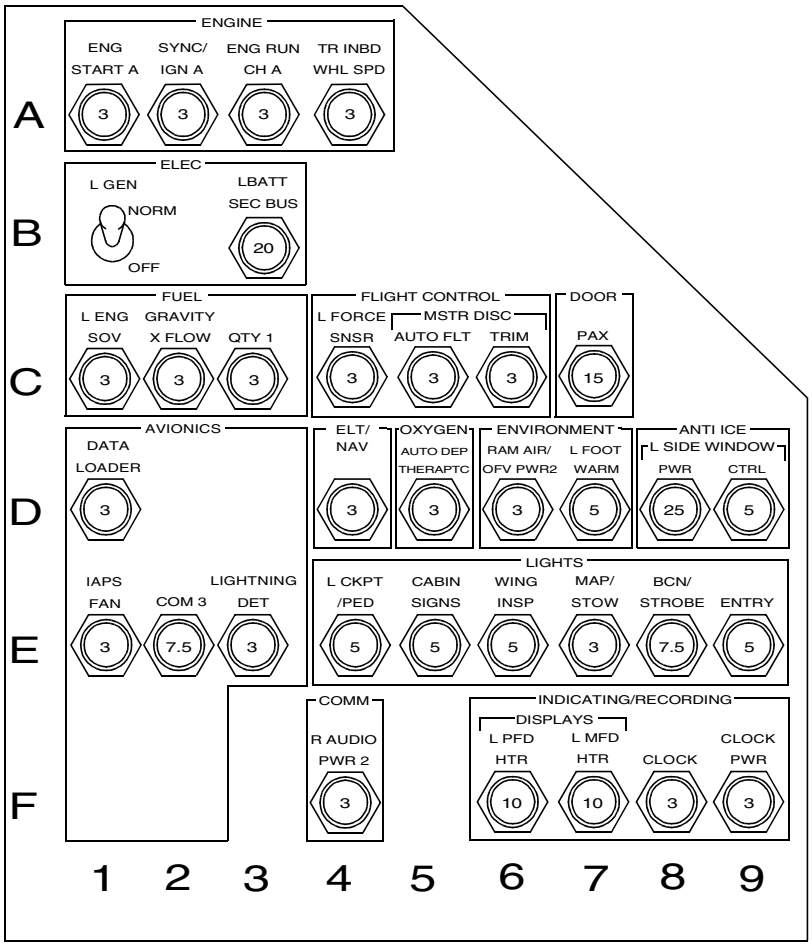

ELECTRICAL SYSTEM (Cont)

CB4 RIGHT SIDE EQUIPMENT RACK CIRCUIT BREAKER PANEL (TYPICAL)

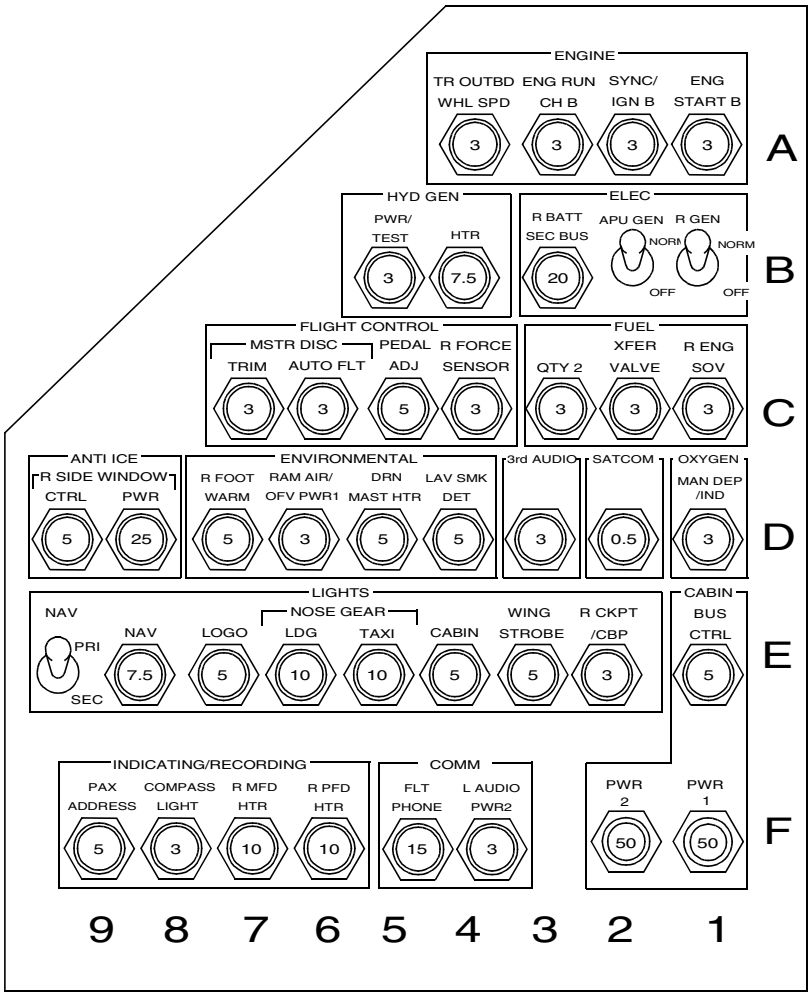

CFO0106002_003

ELECTRICAL SYSTEM (Cont)

CB5 LEFT DC POWER CENTER CIRCUIT BREAKER PANEL (TYPICAL)

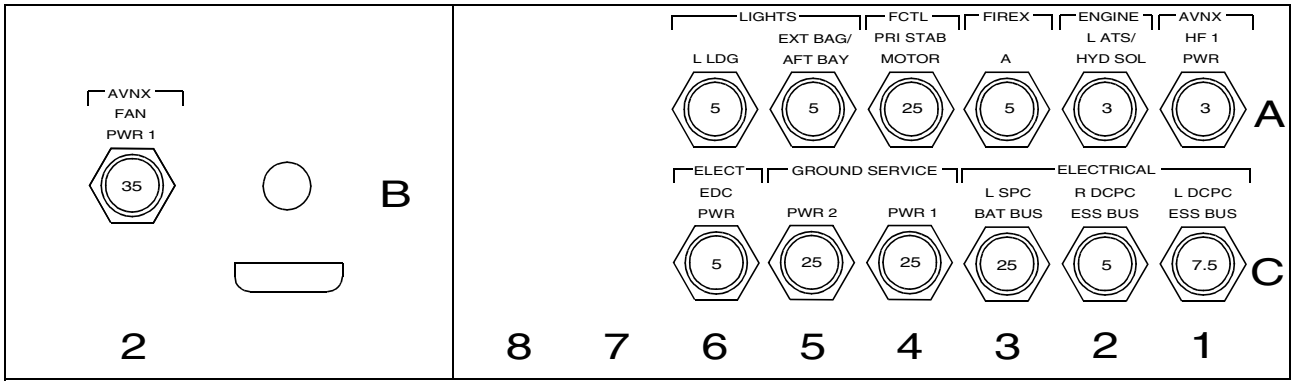

CFO0106002_002

CB6 RIGHT DC-POWER CENTER CIRCUIT BREAKER PANEL (TYPICAL)

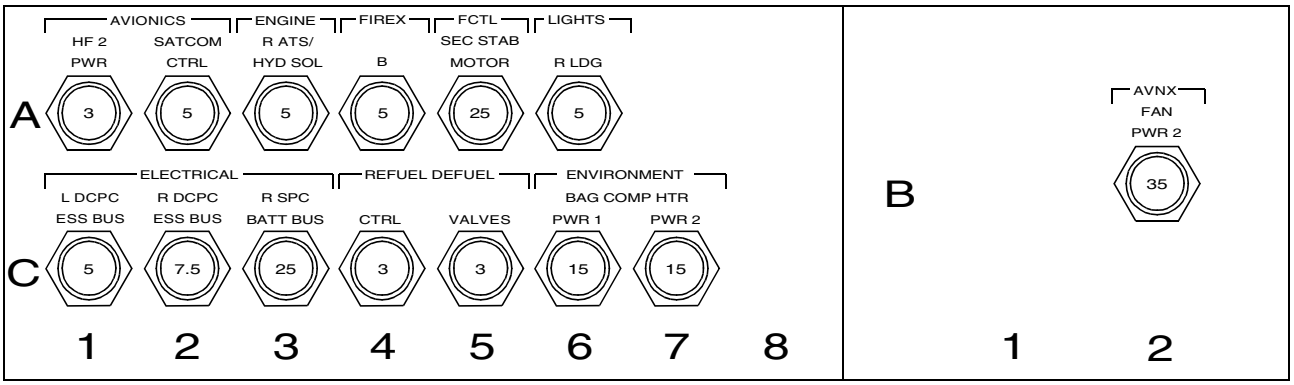

CFO0106002_001

DIRECT CURRENT SYSTEM (DC)

DC ELECTRICAL SYSTEM

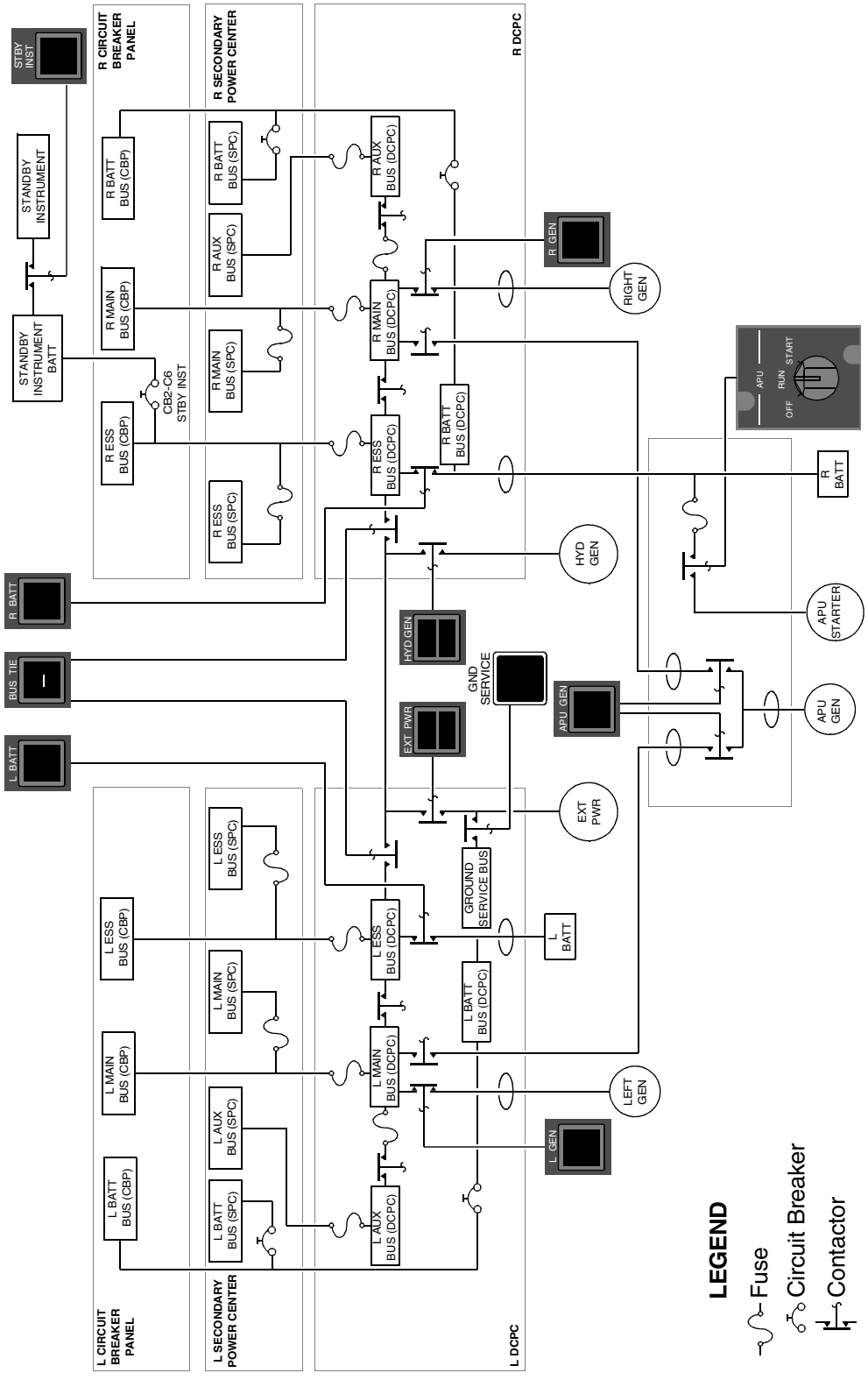

DIRECT CURRENT SYSTEM (DC) (Cont)

DC PRIMARY ARCHITECTURE

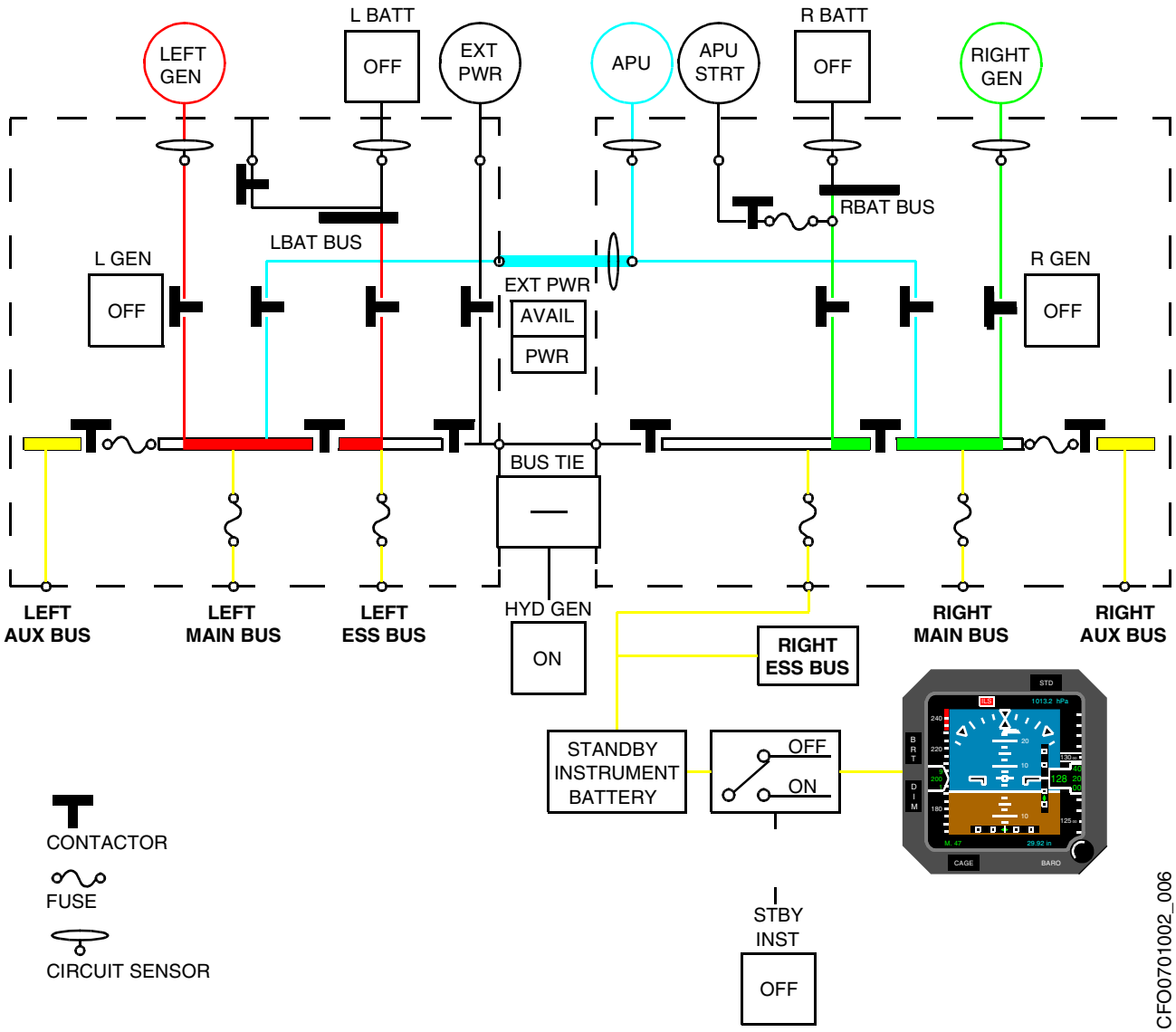

CONTROLS AND INDICATIONS

EXTERNAL POWER CONTROL PANEL

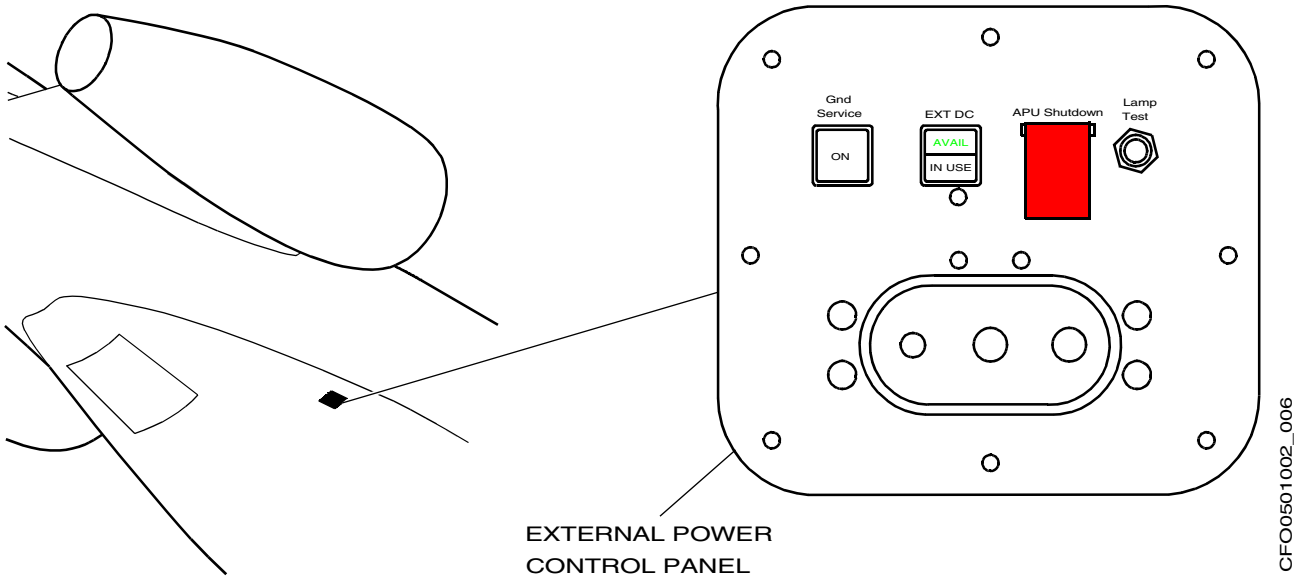

CONTROLS AND INDICATIONS (Cont)

ELECTRICAL SUMMARY PAGE

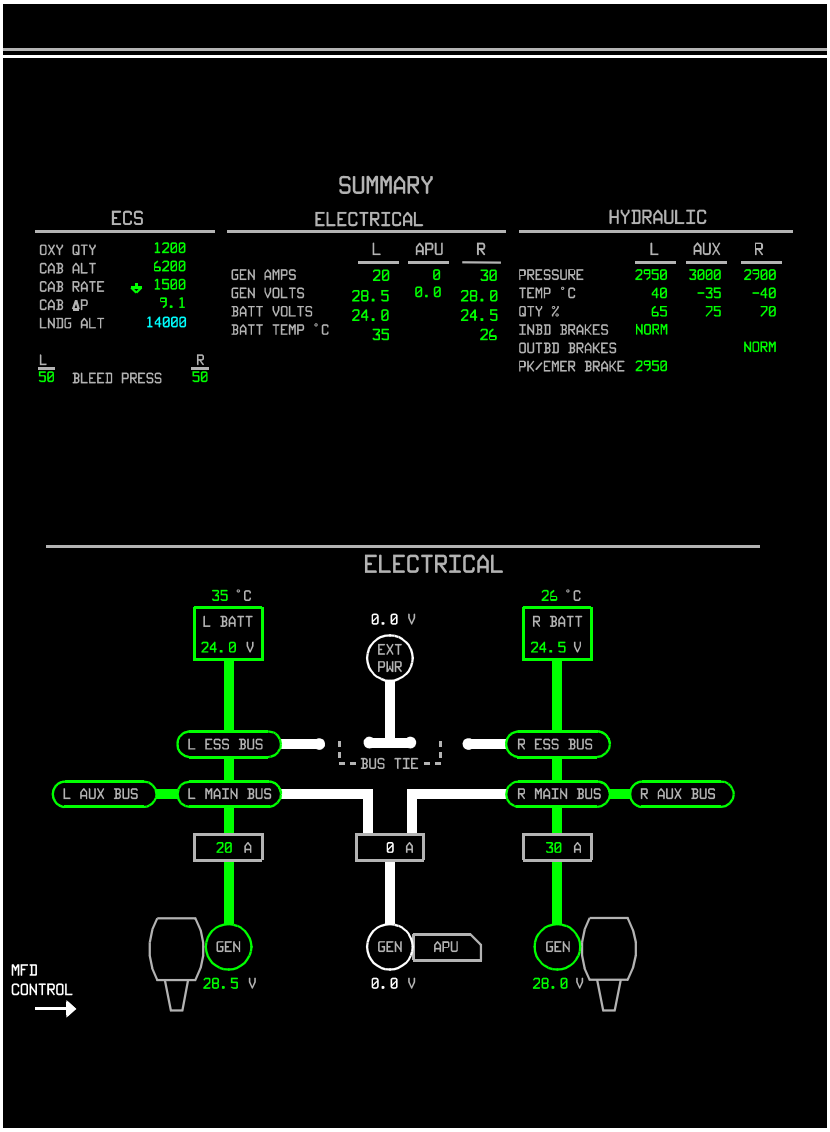

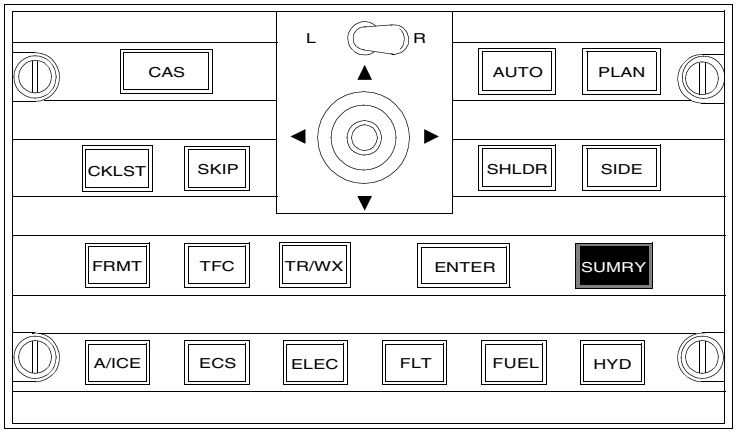

CFO0701002_009

CONTROLS AND INDICATIONS (Cont)

ELECTRICAL CONTROL PANEL

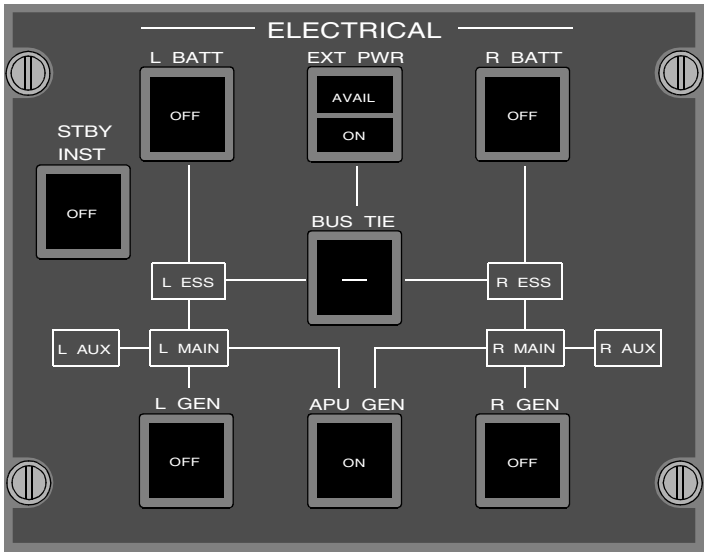

CFO0701002_010

With optional Hydraulic Motor Driven Generator (HMDG) system.

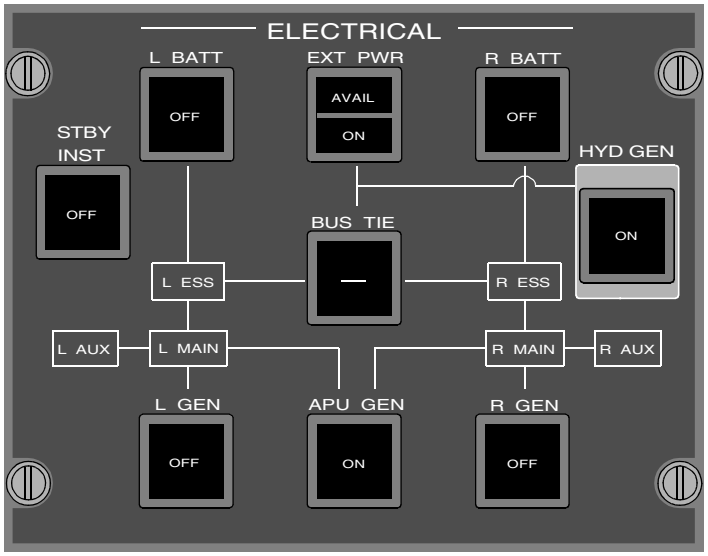

CFO0701002_003

CONTROLS AND INDICATIONS (Cont)

ELECTRICAL SYNOPTIC PAGE

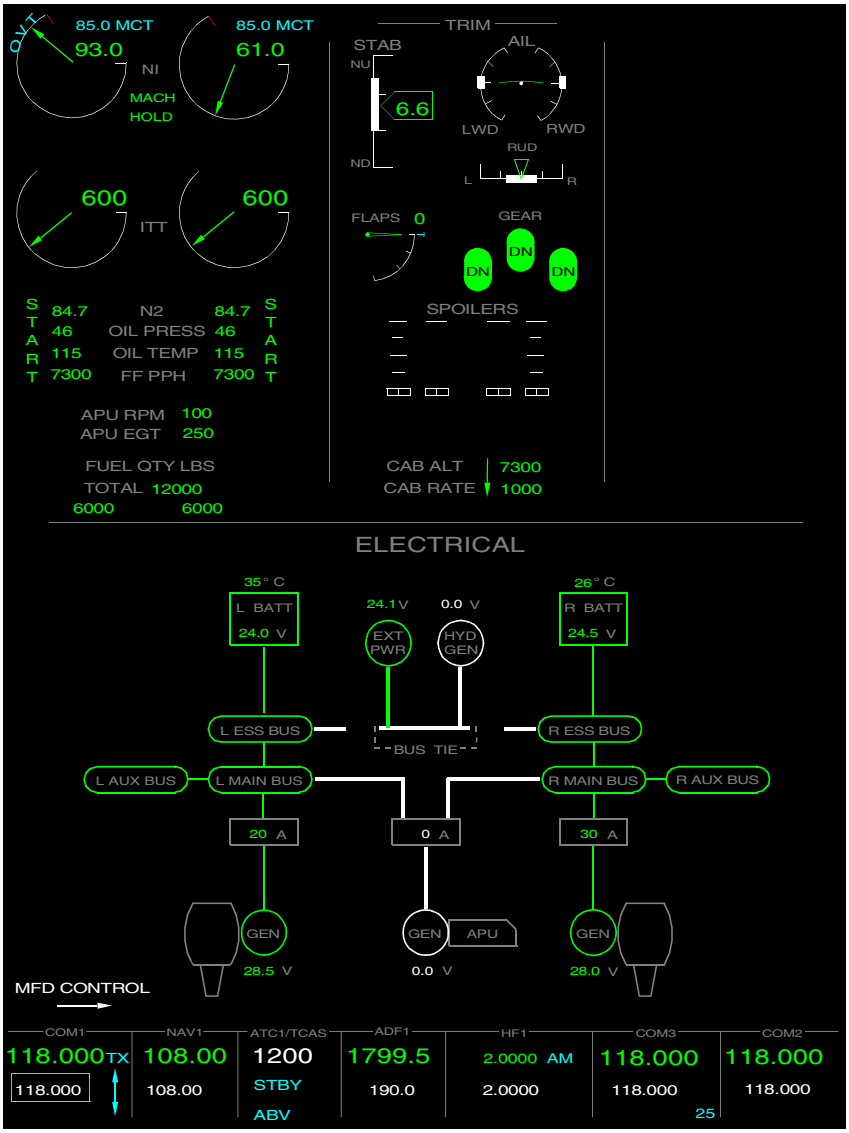

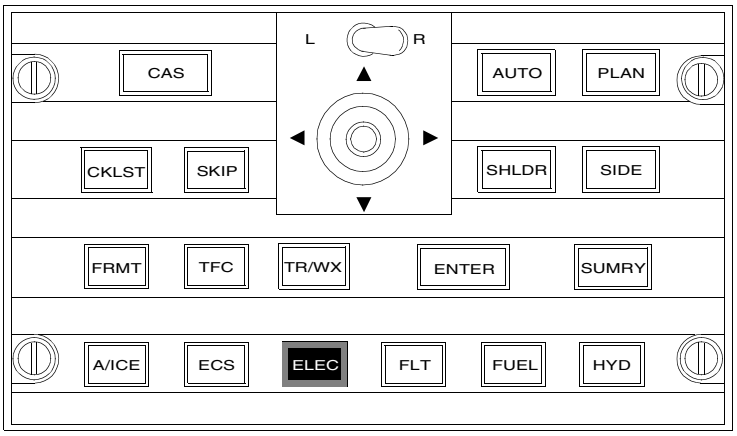

CFO0701002_007

EICAS MESSAGES

The electrical system messages are shown on the EICAS. In the table below is a list of the electrical system messages, inhibits, and aural warnings. A brief explanation of each message is provided.

MESSAGE	INHIBITS	MEANING	AURAL WARNING
L (R) BATT OVERHEAT	TO/LAND	Respective battery internal temperature exceeded 70 °C	
ESSENTIAL POWER ONLY		The essential buses are powered by the batteries only. AUX and MAIN buses are automatically deactivated in flight	
APU GEN FAIL	TO/LAND	The APU generator failed	
APU GEN OVERLOAD	TO/LAND	The APU generator has exceeded 500 amp	
L (R) BATT FAIL	TO/LAND	Either the respective battery contactor failed or the battery has been automatically disconnected for overheat protection	
ELEC HYD GEN FAIL	TO/LAND	The hydraulic generator has failed to come on-line	
ELECTRICAL FAULT	TO/LAND	An electrical system failure has occurred that prevents display of electrical indications	
L (R) GEN FAIL	TO/LAND	The affected generator has failed. If the APU generators not on line, the BUS-TIE will automatically close and, in-flight, the auxiliary buses will not be powered	
L (R) ESS BUS FAIL	TO/LAND	Affected bus is not powered	
L (R) GEN OVERLOAD	TO/LAND	Respective generator load exceeded 500 amp	
L (R) MAIN BUS FAIL	TO/LAND	The affected MAIN bus is not powered	
L (R) AUX BUS FAIL	TO/LAND	The affected auxiliary BUS is not powered with a power source available	
L (R) AUX BUS OFF	TO/LAND	Respective AUX BUS is selected off	
ELECTRICAL FAULT	TO/LAND	An electrical system fault occurred, resulting in loss of redundancy in the display of electrical indications	

MESSAGE	INHIBITS	MEANING	AURAL WARNING
STBY INST BATT FAULT	TO/LAND	At least one of the following has occurred: - Standby instrument heater is inoperative - Standby instrument battery charger is inoperative - Standby instrument battery temperature is greater than 80 °C - At least two cells of the standby instrument battery have failed	
APU GEN OFF		APU GEN switch has been selected OFF	
L (R) BATT OFF		The affected battery has been selected OFF	
BUS TIE MAN OPEN		The bus tie has been manually selected open. This prevents automatic operation of the bus tie. Pressing the BUS TIE switch a second time restores automatic control	
ELEC HYD GEN ON		The optional hydraulic motor driven generator (HMDG) has been activated	
L (R) GEN OFF		The affected engine generator switch has been selected OFF	

Table of Contents

Introduction 08-01-01
Oxygen System 08-01-02
Description 08-01-02
Oxygen System — Baseline Configuration 08-01-02
Oxygen System — Optional Configuration 08-01-03
Components and Operation 08-01-04
Oxygen Cylinder 08-01-04
Overboard Discharge Indicator 08-01-04
Oxygen Service Panel 08-01-05
Smoke Goggles 08-01-06
Flight Crew Oxygen Mask and Storage Cup 08-01-06
Flight Crew Oxygen Mask Cold Weather Storage 08-01-06
Crew Oxygen Mask 08-01-07
Passenger Oxygen System 08-01-09
Description 08-01-09
Components and Operation 08-01-09
Electrical Pneumatic Actuating Valve (EPAV) 08-01-09
Mask Containers 08-01-09
Passenger Masks 08-01-10
Emergency Equipment 08-01-11
Description 08-01-11
Components and Operation 08-01-11
Flight Deck Emergency Equipment 08-01-11
Passenger Cabin 08-01-11
Protective Breathing Equipment 08-01-13
Overwater Emergency Equipment 08-01-17
Life Rafts (Optional) 08-01-19
Controls and Indications 08-01-19
Passenger Oxygen Control Panel 08-01-19
Placards 08-01-19
EICAS Messages 08-01-20

INTRODUCTION

The Oxygen System is designed to allow oxygen storage and distribution to passengers, and crew. Cockpit installation includes quick donning masks, mask stowage cups and smoke goggles for aircrew protection. Oxygen storage and distribution includes a cylinder(s) to store oxygen, supply regulated pressure, equipment for cylinder servicing such as refilling and discharge indication, distribution to the cockpit and passengers, including therapeutic masks.

The following equipment is provided to deal with specific emergencies: Smoke goggles, personal breathing equipment, life vests, crash axe, flashlights, first aid kit and portable fire extinguishers.

OXYGEN SYSTEM

DESCRIPTION

Oxygen is stored in gaseous form in one or two cylinders, and delivers oxygen at a reduced pressure to the electrical pneumatic actuating valve (EPAV). The EPAV supplies oxygen to the crew masks, passenger drop out boxes and therapeutic mask. It optimizes the passenger oxygen consumption and gives system information to the EICAS.

OXYGEN SYSTEM — BASELINE CONFIGURATION

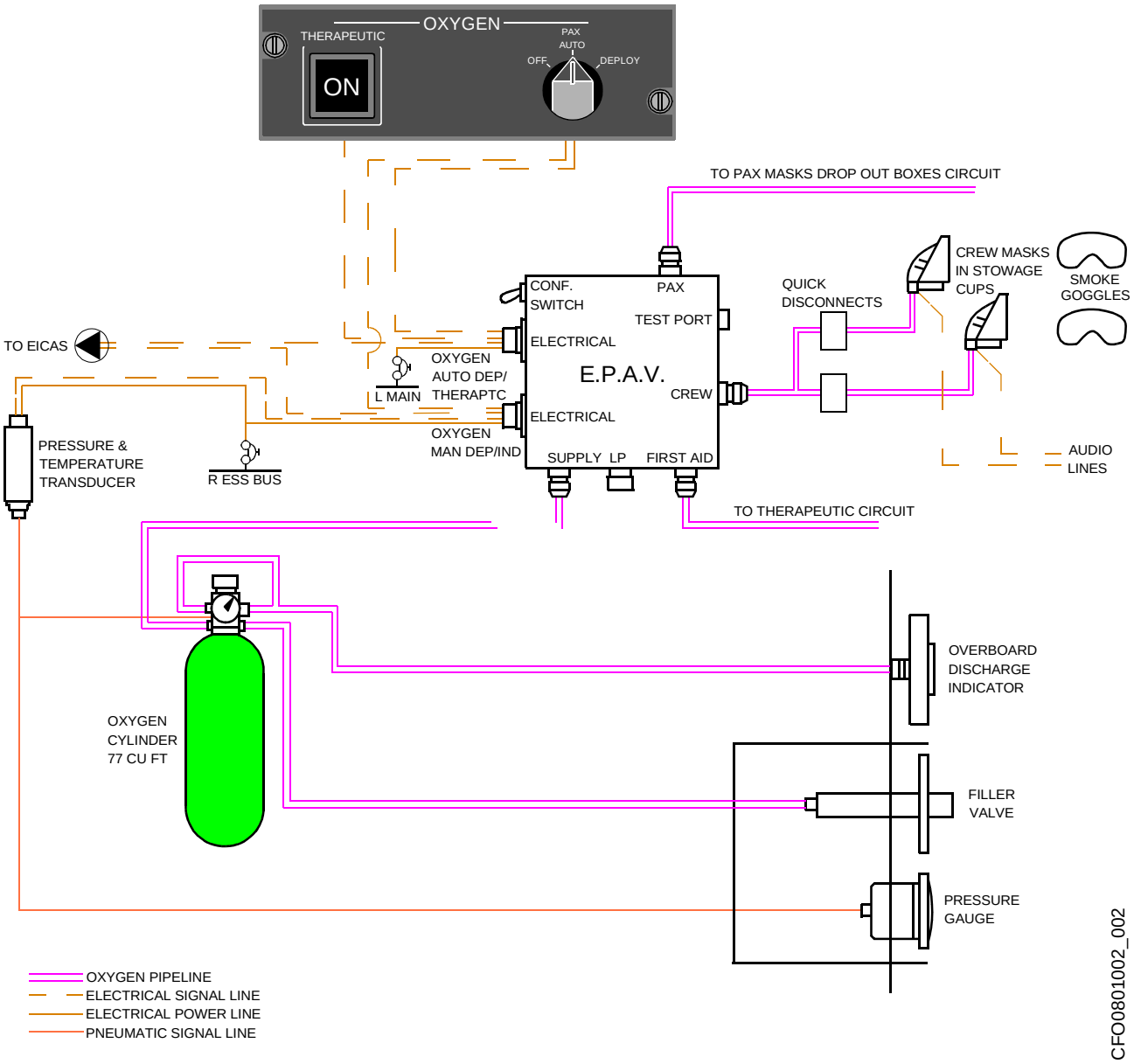

OXYGEN SYSTEM (Cont)

OXYGEN SYSTEM — OPTIONAL CONFIGURATION

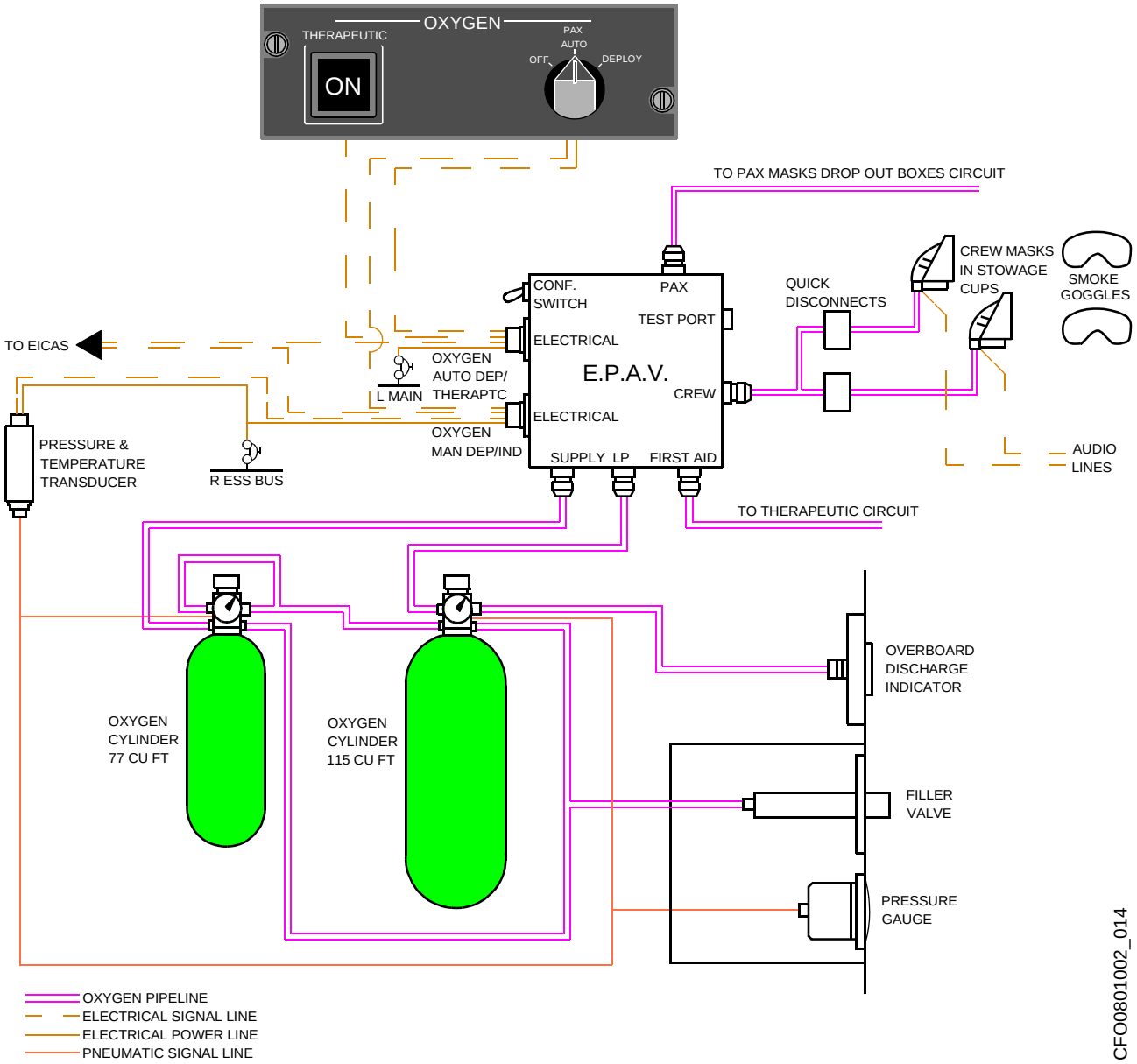

OXYGEN SYSTEM (Cont)

COMPONENTS AND OPERATION

The flight deck oxygen system consists of two stowage containers attached to the crew seats, and two quick-donning type oxygen masks.

A manifold system delivers oxygen to crew oxygen masks. When supplemental oxygen is needed, or when the air contains toxic fumes, each crew member has access to individual quick-donning masks located in a container behind each crew station. A regulator attached to each oxygen mask provides three selectable supply modes: NORMAL diluted demand, 100% pure oxygen on demand, and EMERGENCY. One portable breathing equipment (PBE) container is located behind the pilot's station on the bulkhead near the floor.

OXYGEN CYLINDER

The basic oxygen system includes one 77 cu ft (2183 liters) cylinder. A second 115 cu ft (5458 liters) cylinder is available as an option for long distance flight capability. Both cylinders are equipped with the same regulator for supplying reduced pressure to the distribution circuit.

Both oxygen cylinders are composite cylinders with a pressure reducing regulator mounted directly on top and manually operated through an on/off toggle. Oxygen is stored in the cylinder at high-pressure. The regulator reduces high-pressure oxygen to a lower suitable pressure for use with passengers, therapeutic and crew masks.

The cylinder and regulator assembly is installed inside a dedicated compartment in the lavatory section (right side). The cylinder includes safety relief valves (one on the high-pressure line and another on the reduced pressure line) and are connected to discharge lines and to the overboard discharge indicator.

A temperature and pressure transducer provides the oxygen compartment ambient temperature and the oxygen pressure in the cylinder(s) to the EPAV. Based on these two signals the EPAV generates a temperature-compensated pressure signal and sends it to the EICAS. According to the number of cylinders installed on aircraft, the EICAS converts the pressure signal into liters of oxygen for display of oxygen quantity in the cockpit.

When fully charged, the oxygen system pressure is 1850 psi. The quantity is continuously monitored and displayed on the EICAS and SUMMARY synoptic pages. When the quantity of the cylinder is less than 700 liters the readout changes to amber and the OXYGEN QUANTITY LOW (C) CAS message is displayed. The message is based on temperature corrected pressure.

OVERBOARD DISCHARGE INDICATOR

The shutoff and pressure regulator system incorporates a pressure relief valve to discharge the oxygen cylinder contents overboard in the event of excessive oxygen pressure. Should the contents be discharged overboard, the green overboard discharge indicator located above the oxygen servicing panel on the right side of the of the aircraft will be ruptured or missing.

OXYGEN SYSTEM (Cont)

OXYGEN SERVICE PANEL

The oxygen service panel is located on the right side of the fuselage directly forward of the right engine. The oxygen service panel has a filler valve and a pressure gauge. Replenishment of the oxygen system is a maintenance function.

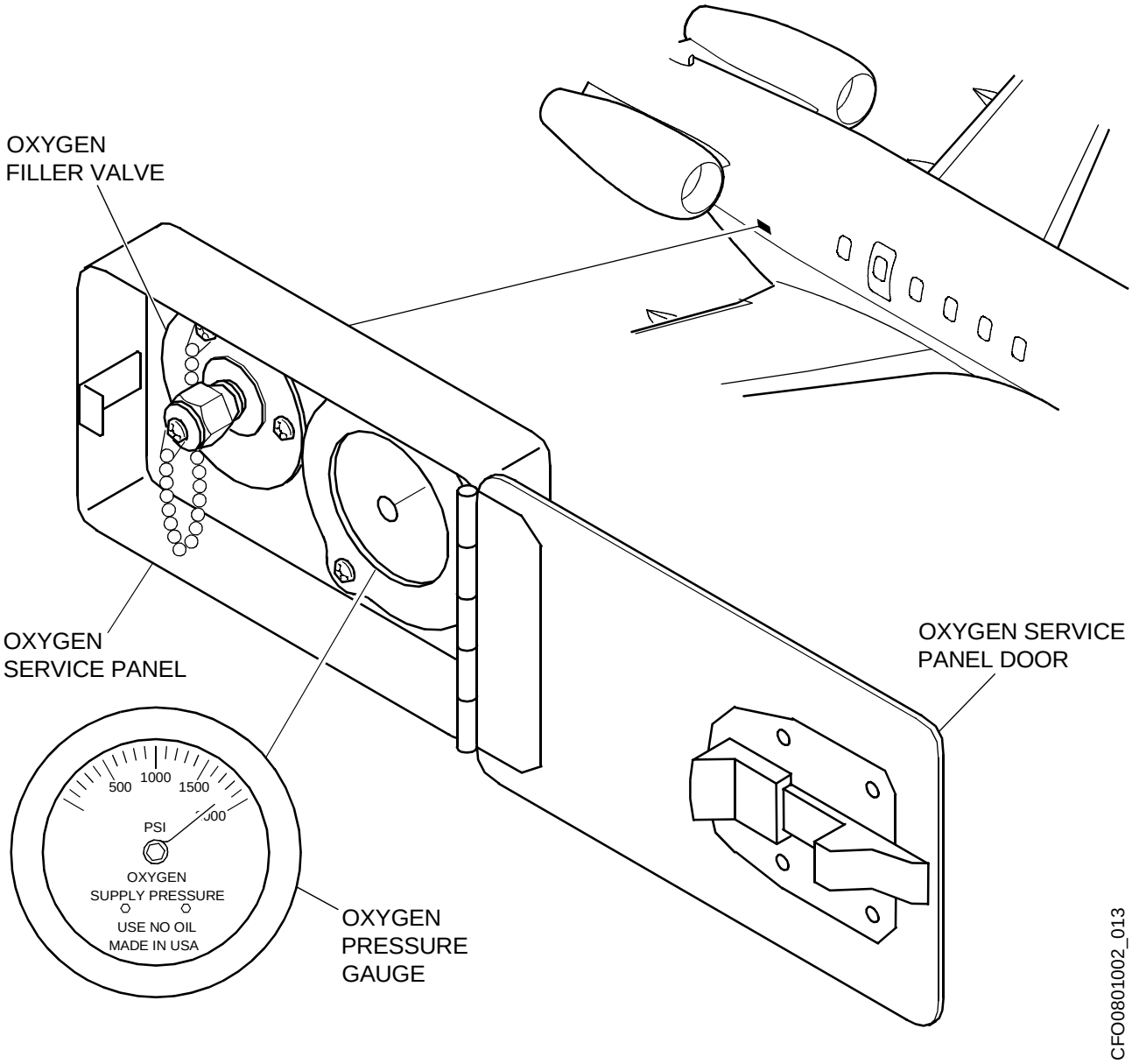

OXYGEN SYSTEM (Cont)

SMOKE GOGGLES

Smoke goggles provided for both flight crew members and are designed to be used in conjunction with the EROS crew oxygen mask. The goggles are equipped with a vent-valve, and provide smoke and toxic gas protection for crew members.

The goggles are composed of a polycarbonate molded lens and coated with anti-misting and scratch resistant coatings. However, the goggles should be kept in a protective bag to minimize inadvertent scratching. The goggles are equipped with an adjustable headband and a flexible silicone molded seal allows the wear of corrective eyewear or sunglasses.

The goggles are located in storage bins on the side console outboard of each crew station.

FLIGHT CREW OXYGEN MASK AND STORAGE CUP

The flight crew masks are stowed in accessible stowage cups over each crew member's outboard shoulder.

FLIGHT CREW OXYGEN MASK STOWAGE AND HARNESS FOLDING INSTRUCTIONS

The instructions for stowage and removal of the crew oxygen mask are shown below. When stowing the mask, it is important not to stuff the harness into the nosepiece cavity, as this could impede donning of the mask.

Another view is shown for clarity, and the instructions are as follows:

1. Insert the mask so that the face piece goes in the cup under the retaining tabs as detailed in Figure A.
2. Once the face piece is in the cup, rotate the top of the mask out until the face piece is resting against the retaining tabs as detailed in Figure B. The mask should be in an upright position ready for clicking home.
3. Push the mask in the cup until it clicks home on both sides of the cup as detailed in Figure C.

NOTE: Failure to properly perform step 2 before pushing the regulator into place will result in the face piece being subjected to possible damage.

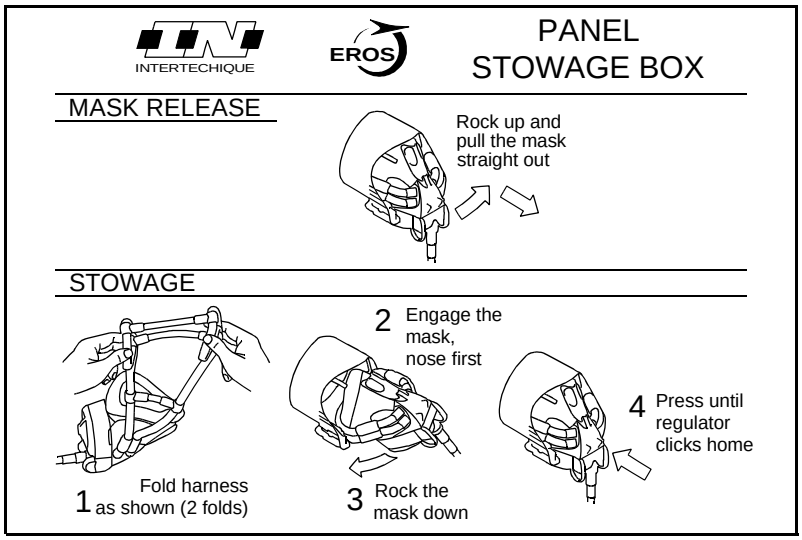

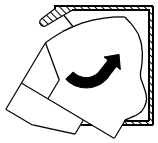
FIGURE A

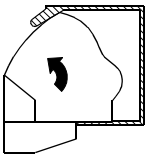
FIGURE B

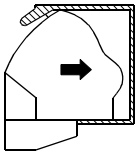
FIGURE C

CFO0801060_001

FLIGHT CREW OXYGEN MASK COLD WEATHER STORAGE

If the aircraft is to be parked for an extended period at ambient temperatures of -5 °C (23 °F) or below, it is recommended that the oxygen be turned off, the crew oxygen masks disconnected and stowed in a heated room, or the cabin warmed to at least +15 °C (59 °F) before use.

OXYGEN SYSTEM (Cont)

CREW OXYGEN MASK

The crew oxygen masks are quick-donning masks with an oxygen regulator, an inflatable harness and a microphone. The facepiece is equipped with a venting system located on the bridge of the nosepiece. It opens automatically when smoke goggles are worn to ensure smoke protection.

The NORMAL, 100%, EMERGENCY, and PRESS TO TEST knob is located on the bottom of the mask to check the oxygen supply when the mask is stowed in its storage container. It can be also used to provide positive pressure for smoke protection at any altitude.

The crew oxygen masks are only required to function (oxygen flow and test) at -5 °C and warmer. If the cabin has been allowed to cold soak below this temperature, it may be necessary to warm the cabin prior to testing the masks during the preflight inspection.

NORMAL

When the control knob is in the normal (N) position, the oxygen supplied to the mask is a mixture of ambient air and pressurized oxygen. In this position, the operator can turn the flow control knob to adjust the flow.

100%

When the control knob is in the 100% position, the mask is provided with pure oxygen.

EMERGENCY

The emergency flow control knob is also located on the regulator unit. If the knob is turned clockwise to the EMERGENCY position, the mask supplies a constant flow of oxygen at a permanent positive pressure. At high cabin altitude (above 35 000 ft) the mask supplies only pure oxygen at a constant flow, regardless of the knob position.

PRESS TO TEST

When the press to test button is pushed, oxygen is momentarily supplied to the mask and the hose flow indicator will change color.

INFLATABLE HARNESS CONTROL

The oxygen mask is extracted from the stowage box by gripping the plates of the regulator, which protrude out of the box. When the two red tabs on the mask are squeezed, the harness inflation valve will open permitting the harness to inflate. When the tabs are released, the harness deflates and the mask holds tightly against the operator's face.

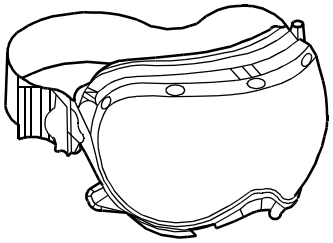

SMOKE GOGGLES

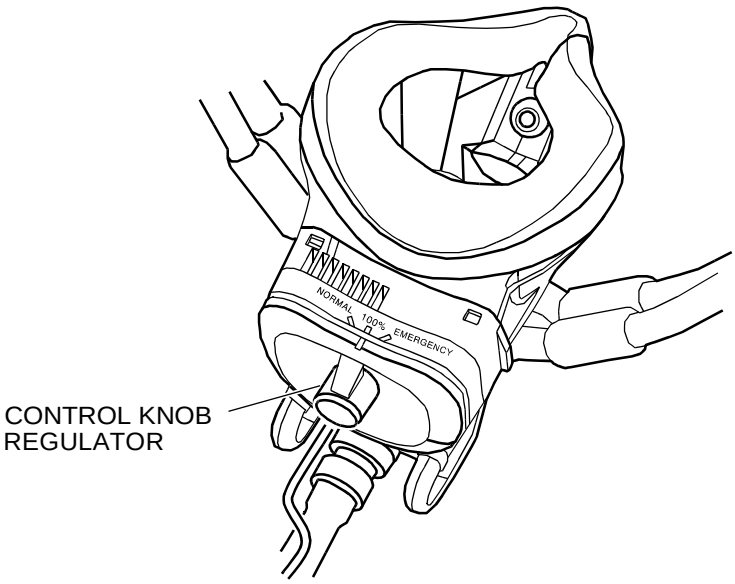

CREW OXYGEN MASK

CFO0801002_015

OXYGEN SYSTEM (Cont)

MICROPHONE CONTROL

When the O2 MASK/NORM switch on the associated audio control panel is selected to O2 MASK, the microphone in the mask is activated.

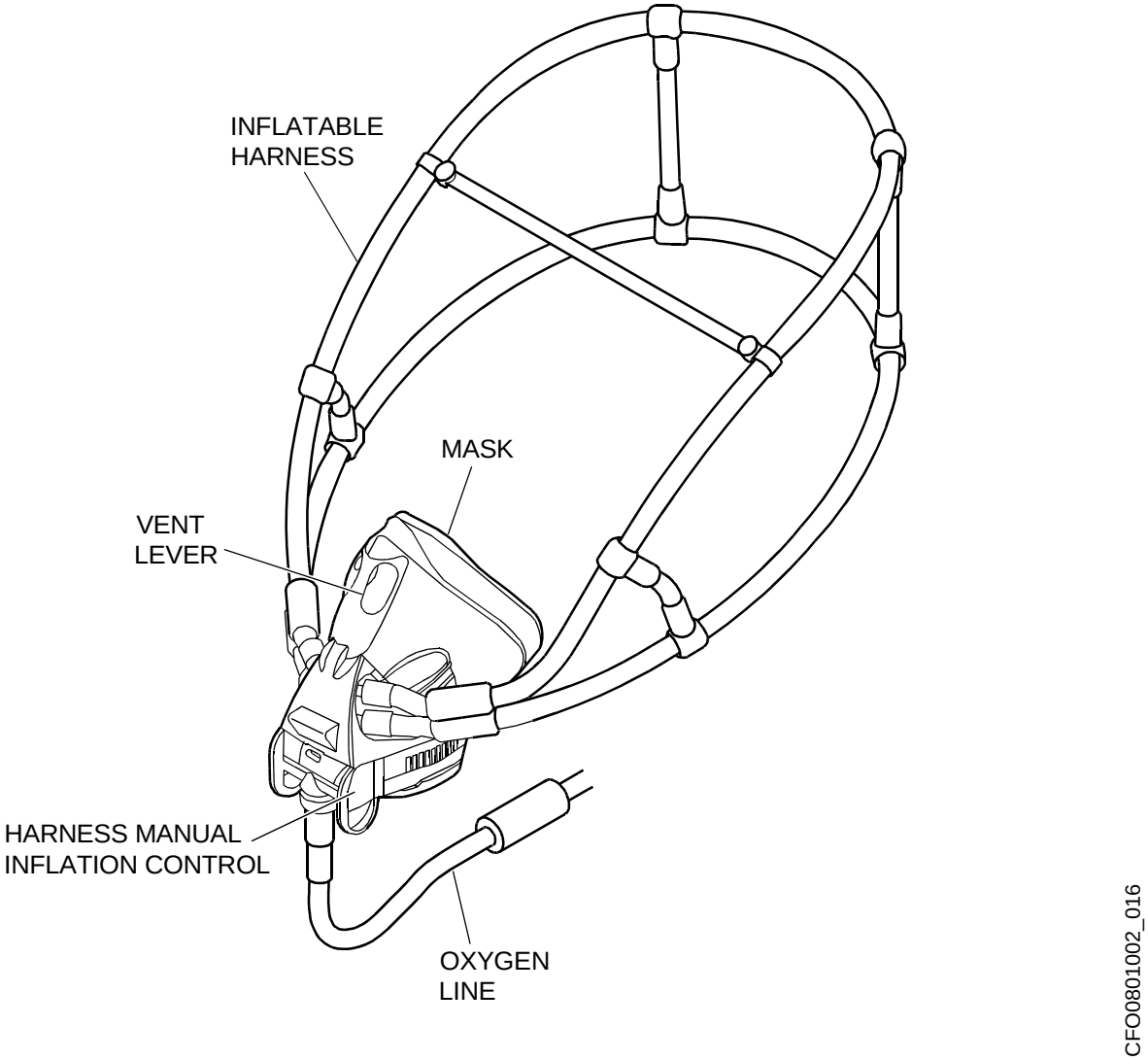

PASSENGER OXYGEN SYSTEM

DESCRIPTION

The passenger and crew oxygen systems are supplied by the same oxygen cylinder(s) during cabin depressurization.The passenger masks will automatically deploy, however, they can be manually deployed from the flight deck at any time by selecting DEPLOY on the PAX switch on the OXYGEN control panel.

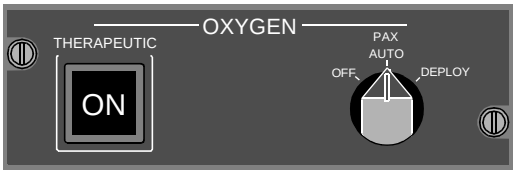

CFO0801002_004

COMPONENTS AND OPERATION

ELECTRICAL PNEUMATIC ACTUATING VALVE (EPAV)

The electrical pneumatic actuating valve (EPAV) controls oxygen availability to the passenger oxygen distribution system and provides for automatic or manual mode selection. The control is a three-position PAX switch on the OXYGEN panel labeled OFF, PAX AUTO, and DEPLOY.

When the passenger masks are deployed (automatically or manually), a PAX OXYGEN ON CAS (S) message appears. If a failure of the passenger oxygen valve is detected, a PAX OXYGEN AUTO FAIL(C) CAS message appears.

AUTOMATIC DEPLOYMENT

With the switch selected to AUTO, the passenger oxygen masks automatically deploy if the cabin altitude climbs to 14,500 ft ± 500 ft. Flow continues until cabin altitude drops below 9500 ft ± 500 ft.

MANUAL DEPLOYMENT

Setting the oxygen switch to the DEPLOY position manually opens the passenger oxygen valve and allows oxygen pressure to flow to the passenger masks. This position will deploy the passenger masks at any cabin altitude.

With the switch indicator in the OFF position, oxygen is not available to the passenger distribution system regardless of cabin altitude.

THERAPUTIC OXYGEN

Therapeutic low pressure oxygen is available to the passenger cabin. The outlet is located approximately midway in the cabin on the right side. Therapeutic oxygen is controlled by the THERAPUTIC switch located on the OXYGEN panel.

MASK CONTAINERS

Each mask container consists of a door, two masks, and a latch mechanism. Containers are installed above each pair of passenger seats. There is also a mask container in the lavatory located on the bulkhead.

The latch mechanism can be operated manually or electrically. When the latch mechanism is released, the door opens and the masks drop down.

PASSENGER OXYGEN SYSTEM (Cont)

PASSENGER MASKS

The passenger oxygen masks consist of a soft silicone rubber face piece with a reservoir air bag. The reservoir bag incorporates a green chamber which inflates when oxygen flows to the mask.

When the oxygen masks drop, passengers should don masks and pull the mask lanyard to initiate oxygen flow. The masks will provide a constant flow of oxygen to the passenger. The mask must be placed over the nose and mouth and is held in place with an elastic strap.

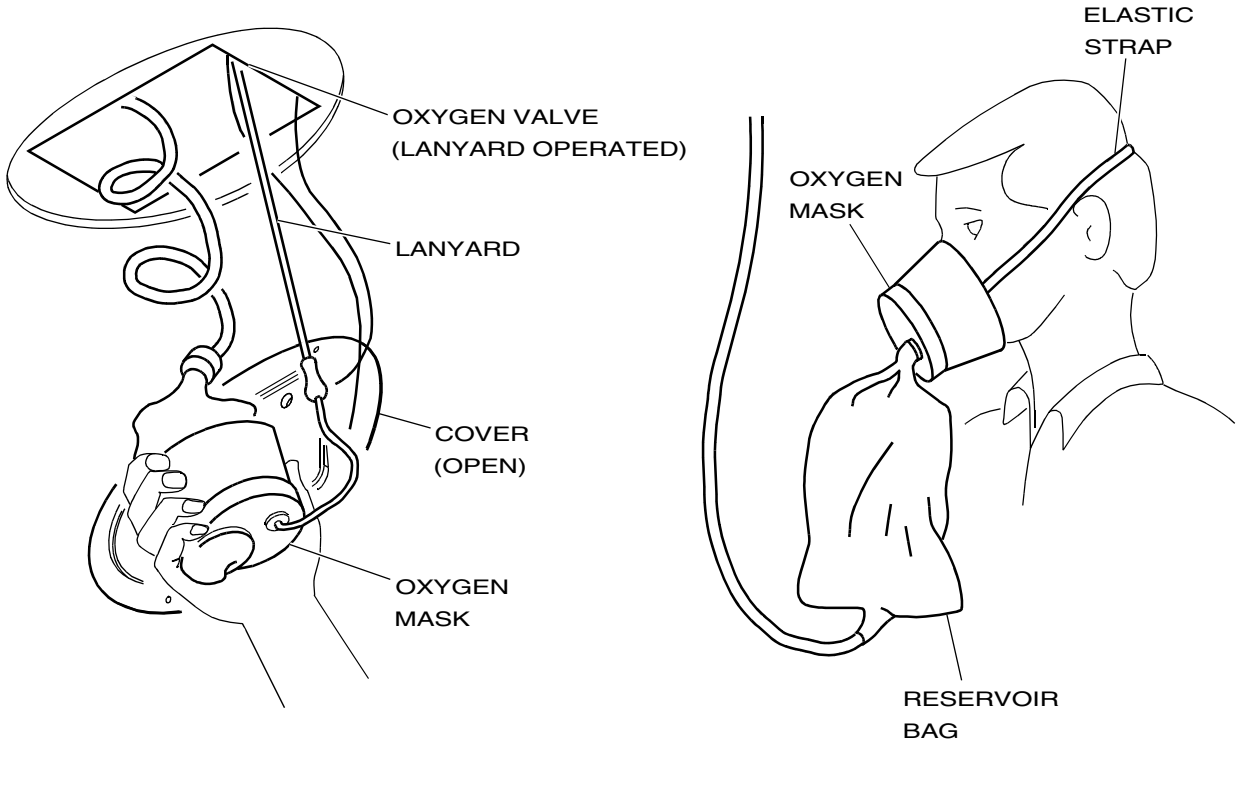

EMERGENCY EQUIPMENT

DESCRIPTION

The Challenger 300 is equipped with safety equipment that is essential to the safety of passengers and crew.

COMPONENTS AND OPERATION

FLIGHT DECK EMERGENCY EQUIPMENT

The flight deck is equipped with:

- 2 flashlights
- 1 Portable breathing equipment (PBE)
- 1 Crash axe
- 1 Fire extinguisher
- 2 life vests

PASSENGER CABIN

The passenger cabin is equipped with:

- 1 First aid kit
- 1 Flashlight
- 2 Fire extinguisher (lavatory and forward closet)
- 1 life vest under each seat
- 1 Portable breathing equipment (PBE)

CRASH AXE

The crash axe is behind the copilot seat.

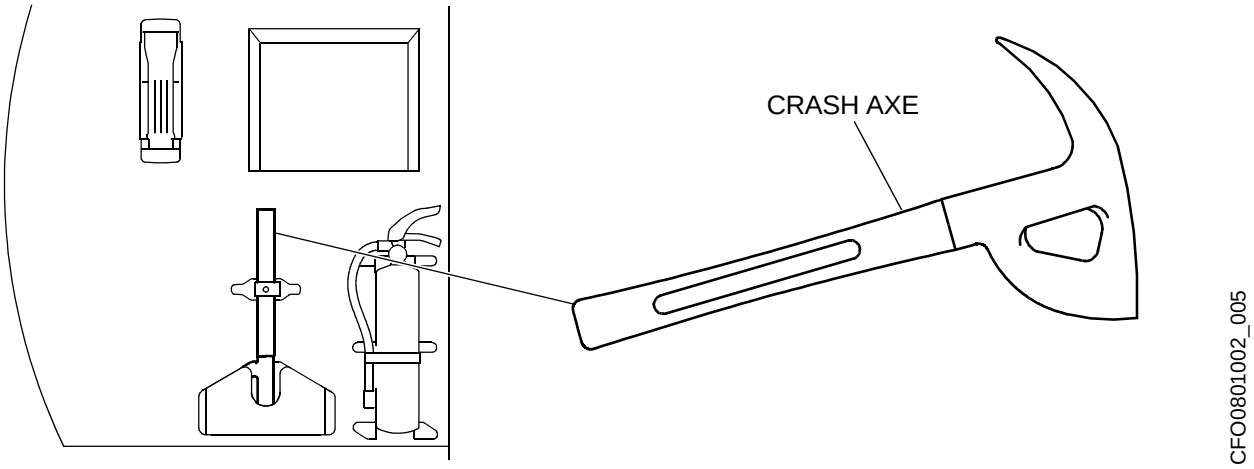

PORTABLE FIRE EXTINGUISHER

The hand-operated fire extinguisher, located in the flight compartment, contains Halon 1211. Halon 1211 is effective on electrical, oil, and fuel fires, and is suitable for use in cold weather.

To operate: Remove from stowage bracket. Hold extinguisher upright in either hand, slide the locking pin down with thumb, aim the nozzle towards the base of the fire and press lever. Discharge stops when the lever is released. Ventilate the compartment promptly after successfully extinguishing the fire to reduce gases produced by fire and Halon. If the discharge lever is held in the ON position, the extinguisher is fully discharged in 10 seconds.

WARNING: If a fire extinguisher is discharged in the flight compartment, all flight crew must wear oxygen masks with EMERGENCY selected (100% oxygen). Crew exposure to high levels of Halon vapor may result in dizziness, impaired coordination, and reduced mental sharpness.

The fire extinguisher is effective in fighting Class A, B, and C fires.

EMERGENCY EQUIPMENT (Cont)

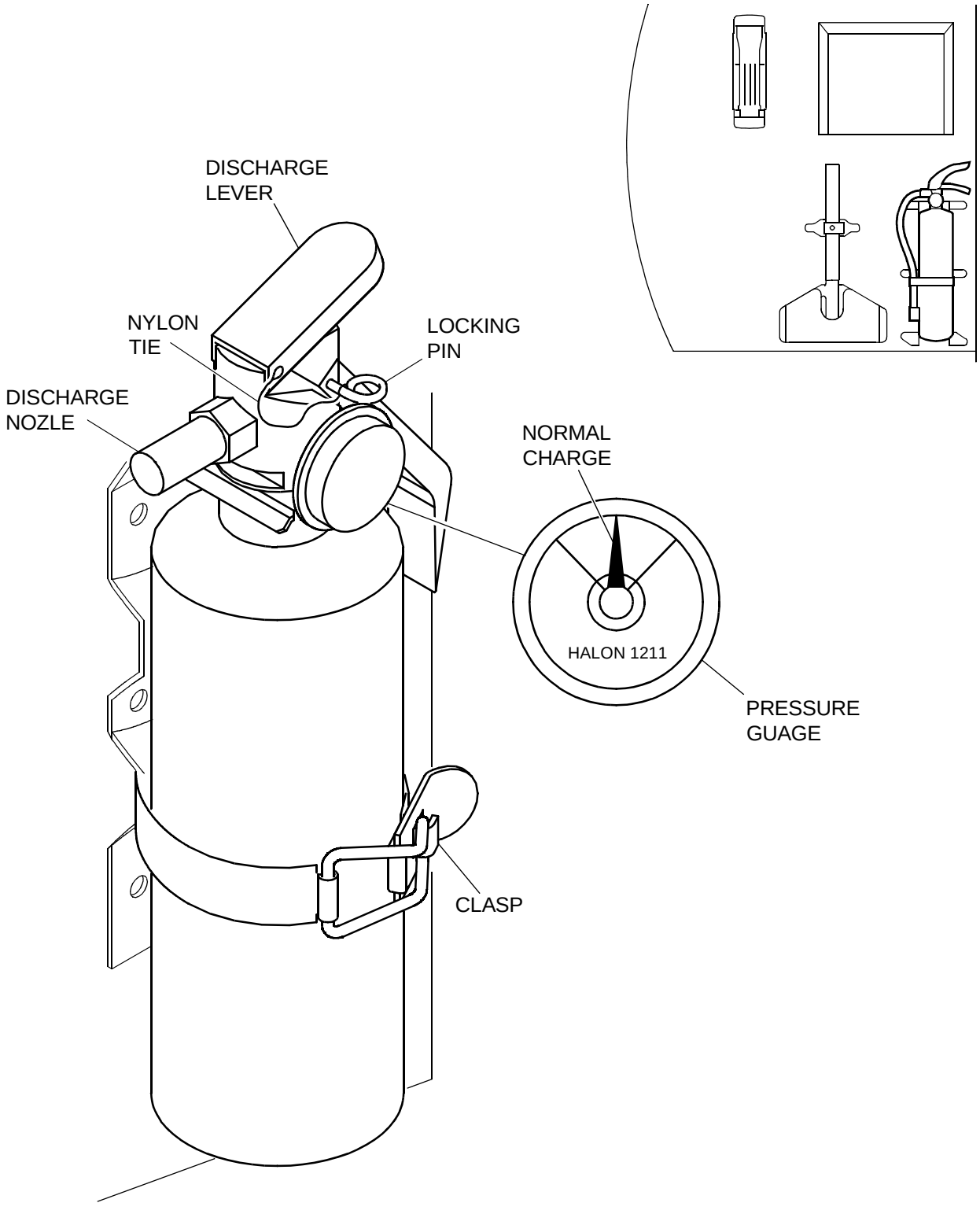

EMERGENCY EQUIPMENT (Cont)

PROTECTIVE BREATHING EQUIPMENT

Protective breathing equipment (PBE) is available for a crew member to use in fighting cabin fires. The PBE is designed to protect the user's eyes and respiratory system from the harmful atmosphere which may be generated by a cabin fire. The PBE consists of a hood with a visor which is placed over the head and seals around the neck. An oxygen generating canister provides breathing oxygen for the user. The PBEs are vacuum sealed in a bag and stored in a box behind the pilot's station and in the lavatory. The PBE is a throw-away unit that must be replaced whenever the vacuum seal is broken. It is imperative that the vacuum seal be maintained since the oxygen-generating chemicals react with moisture.

Duration of oxygen production is nominally 15 minutes depending upon the work rate and size of the user. Useful life of a sealed PBE is 10 years from the date of manufacture.

NORMAL OPERATION

Donning the PBE:

The PBE is mounted on the bulkhead behind the pilot's seat. Some aircraft may have a second portable carrier stowed in a cabinet in the cabin area.

Portable Container

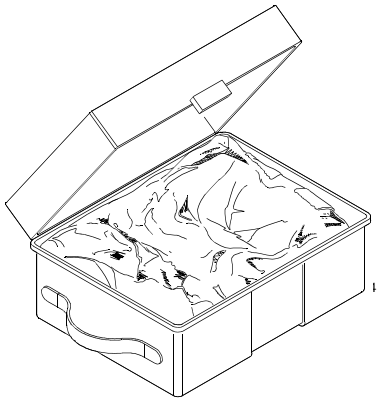

1. Removing mask from container.
   a. To open the portable container, lift the single latch on the cover and lift. Remove sealed bag from the container.

   b. On the mounted container, grasp the red access handle on the protective container firmly and pull forcibly to disengage the cover. When the cover is removed from the container, immediately drop it. (The vacuum sealed bag does not need to be removed from the container to open.) The packaged unit may be removed from the stowage container prior to opening and carried to a remote location for use.

Mounted Container

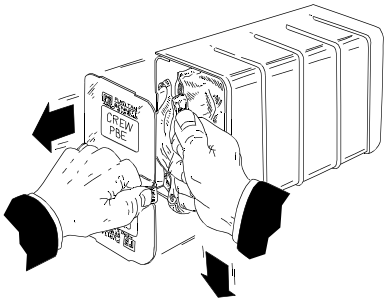

STEP 1

2. To remove the PBE from the vacuum sealed bag, locate the red I.D. tag and pull sharply to tear open the vacuum sealed bag. Reach into the opened vacuum-sealed bag and firmly grasp the PBE. Pull the PBE straight out of the bag. If necessary hold the bag with the opposite hand.

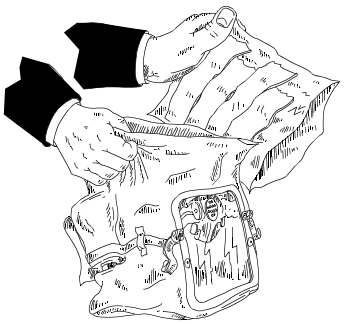

STEP 2

A25-1031

EMERGENCY EQUIPMENT (Cont)

PROTECTIVE BREATHING EQUIPMENT (Cont)

3. Place both hands inside the neckseal opening with palms facing each other and PBE visor facing downward with the oxygen generating canister resting on the tip of the hands.

STEP 3

4. With the top of the head bent forward, guide the PBE neckseal over the top of the head and down over the face using the hands to shield the face and glasses from the oronasal mask cone.

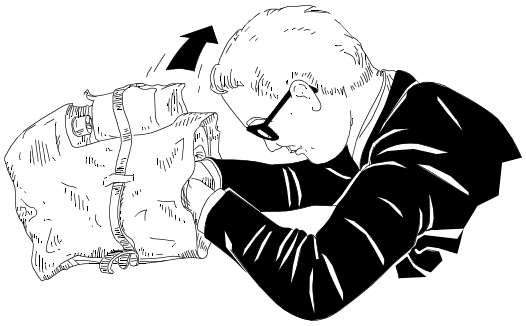

STEP 4

5. With both hands, grasp the adjustment straps at the lower corners of the visor and pull outward sharply to actuate the starter candle. Within 1-5 seconds, a rushing noise of oxygen entering the hood will be heard and inflation will be evident

.

WARNING Human hair is highly flammable. Hair that protrudes through the neckseal could ignite if brought into direct contact with flame.

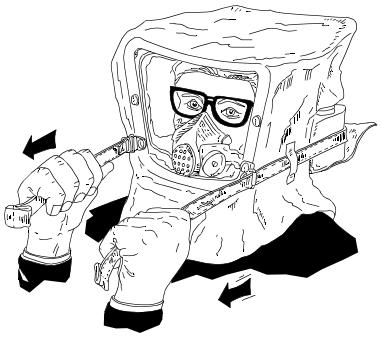

STEP 5

6. With the straps still in hand and head bent forward, pull backward to secure the oronasal mask cone high on the nose for a tight seal.

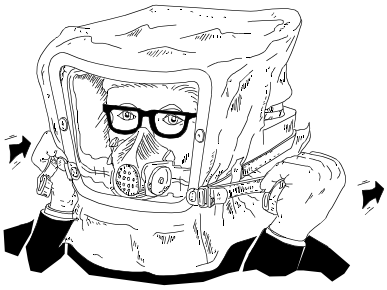

STEP 6

EMERGENCY EQUIPMENT (Cont)

PROTECTIVE BREATHING EQUIPMENT (Cont)

7. If wearing glasses, you may adjust their position to rest on the tip of the oronasal mask cone by moving the sides of the frame through the hood fabric. Do not attempt to adjust through the neckseal as this will result in infiltration of the surrounding atmosphere into the interior of the hood.

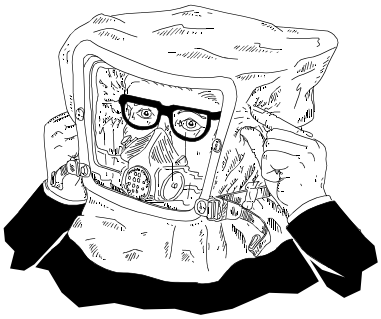

STEP 7

8. When the neckseal is positioned at the neck and the oxygen generating canister is resting on the nape of the neck, remove the hands, checking to see that clothing is not trapped in the seal and hair does not protrude between the seal and the neck. Pull the protective neck shield down to cover the collar and upper shoulder area.

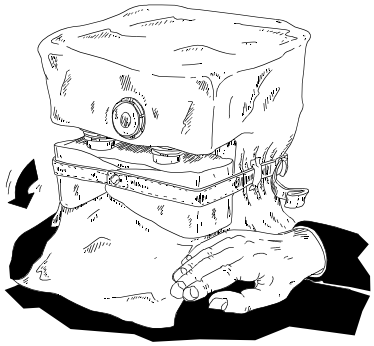

STEP 8

Following actuation, the hood will inflate over a 15-20 second period. After this period, the starter candle will cease flowing and the only sound will be a slight rustling of the fabric on each inhalation and exhalation. Dependent upon breathing rate, there will be a slight exhalation resistance as the exhaled breath is forced through the oxygen generating canister. Inhalation resistance will be almost unrecognizable since inhalation is directly from the interior of the hood through a diaphragm type check valve located at the base of the oronasal mask. The visor should remain clear of fogging or misting. Heat is produced by both the chemical air regeneration process and transfer of body heat during the rebreathing cycle. Heat build-up within the hood is normal and is dependent upon the amount of work performed. There should be no irritating or strong unusual odors within the hood. Operational duration is variable dependent upon the amount of work performed by the user.
If the PBE is worn to exhaustion of the chemical regeneration system, this will be evidenced by a gradual reduction in the expended volume of the hood until the point that the hood is collapsed tightly around the head at the end of a full inhalation. Additionally, there will be a rapid buildup of heat and moisture in the hood as the canister loses its effectiveness. At this point, the wearer should immediately retire to a safe breathing area clear of flame and toxic fumes and remove the device.

Removing the PBE

1. Go to a safe area away from immediate contact with fire or open flame and/or toxic fumes.
2. With both hands, reach for the two lower corners of the visor area and push forward on the metal tabs of the adjustment strap buckles to release the strap tension.
3. Place both hands under the neckseal in the forward area and pull up, guiding the oronasal cone and neckseal over the face/glasses until the PBE is clear of the head.
4. Place the expended PBE in a safe place to cool away from fire or exposure to water.

Disposal

The expended PBE still contains unreacted oxidizing material and strong alkali materials. At the completion of flight, it must be turned over to maintenance for authorized disposal.

EMERGENCY EQUIPMENT (Cont)

ABNORMAL CONDITION OF OPERATION

CAUTION This device produces oxygen which will vigorously accelerate combustion. Do not intentionally expose the device to direct flame contact, or remove in the immediate presence of fire or flame. Due to oxygen saturation of the hair, do not smoke or become exposed to fire or flame immediately after removing.

Users should be trained to recognize abnormal conditions which could signify malfunction or failure of the equipment to properly operate as follows:

Failure Of The Starter Candle

If the starter candle fails to actuate when the adjustment strap is pulled, an additional sharp pull on the strap may be sufficient to dislodge the lanyard pin and actuate the device. If the device still fails to actuate, the hood will continue to function, although the initial purge capability is lost. Sticking the fingers into the neckseal to allow a large lung inhalation may be required to enable sufficient breathing volume until the chemical regeneration system begins producing a surplus of oxygen.

Inadequate Oronasal Mask Seal

Absence of a tight seal of the oronasal cone to the face may result in excess leakage of the exhaled breath into the hood, short circuiting the oxygen-generating canister. This condition may result in a build-up of CO_2 within the rebreathing volume in the hood. Excessive CO_2 is normally indicated by breathing distress such as rapid and labored breathing accompanied by a general feeling of insufficient ability to get one's breath, although there is no restriction to breathing. Presence of moisture or fogging on the visor and the sensation of air escaping from the mask, particularly around the nose and eyes, are indications of a lack of proper fit. Adjustment of the mask straps and mask position to minimize leakage should rapidly alleviate the problem. If the perception of breathing distress persists, the user should quickly go to a safe area and remove the PBE and don alternate breathing equipment if required.

Loss Of Infiltration Seal

The smoke and toxic fumes generated by the combustion of most aircraft cabin interior materials has many strong irritants. The continued presence of strong irritation odors inside the hood resulting in eye and respiratory tract discomfort is a good indicator of the lack of an effective infiltration seal. Verify that the seal is in contact with the skin or the neck and does not have clothing or jewelry trapped in the seal, or hair protruding between the seal and the neck. If the condition persists, or there is evidence of a tear in the neckseal, the user should go quickly to a safe area and don alternate breathing equipment if required.

EMERGENCY EQUIPMENT (Cont)

OVERWATER EMERGENCY EQUIPMENT

LIFE VEST

Life vests are provided for crew and passengers. Flight crew life vests are located under the pilot and copilot's seats. The passenger life vests are located in a compartment under each passenger seat. The life vests are inflated by pulling the red CO_2 release tabs. An oral inflation tube is also available if the CO_2 cartridge does not inflate the vest.

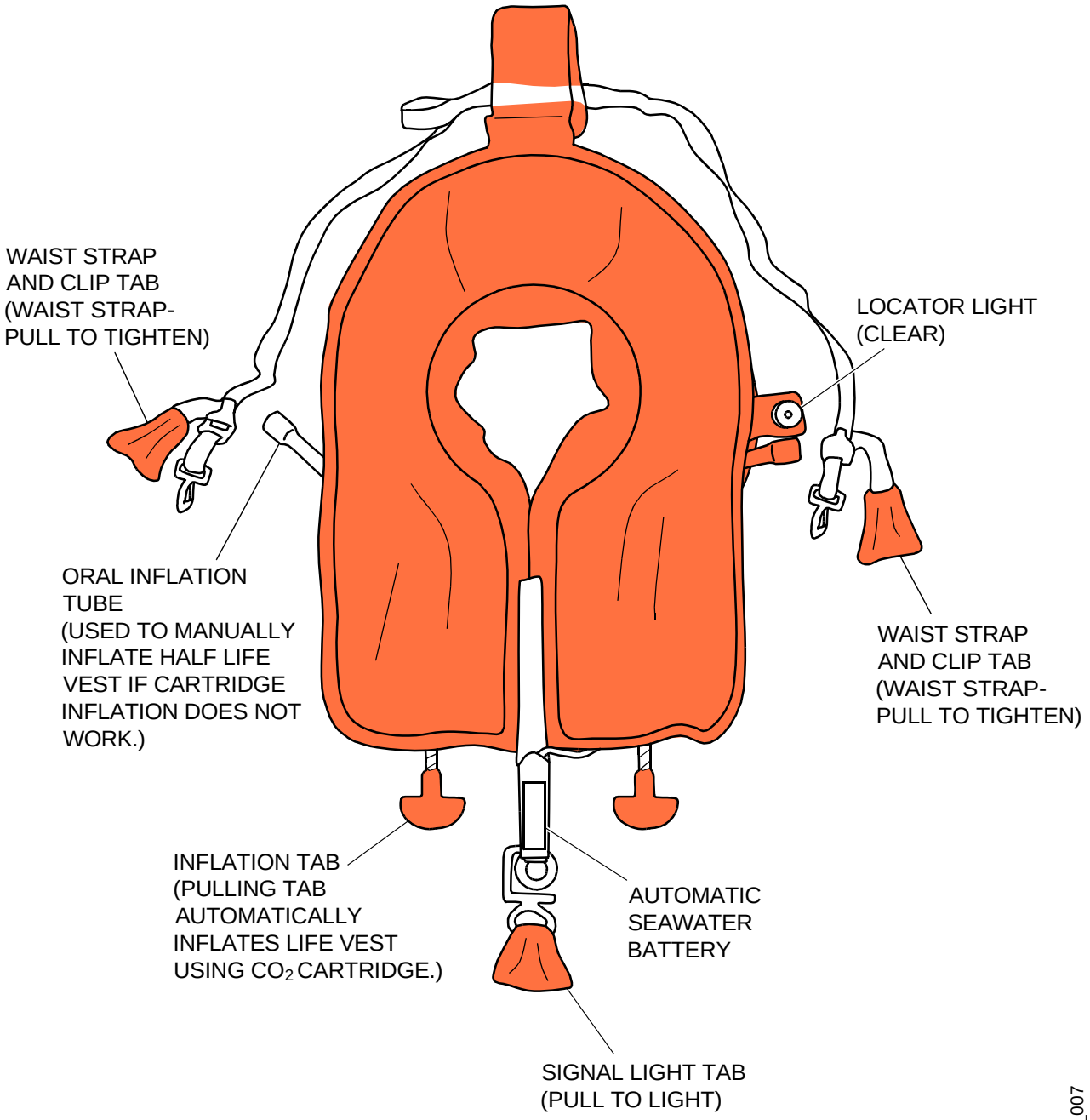

EMERGENCY EQUIPMENT (Cont)

To don the life vest, proceed as follows:

1. FIND THE LIFE VEST UNDER THE SEAT.

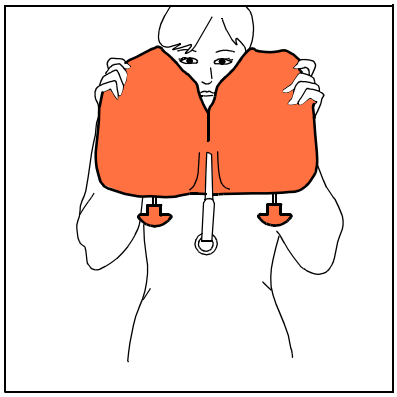

2. PUT THE LIFE VEST OVER HEAD...

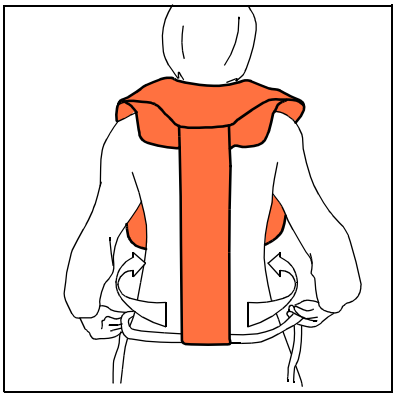

3. ...WITH THE BACK PIECE BEHIND.

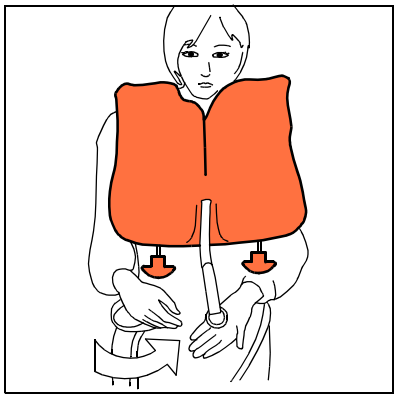

4. FASTEN RINGS TO CATCH

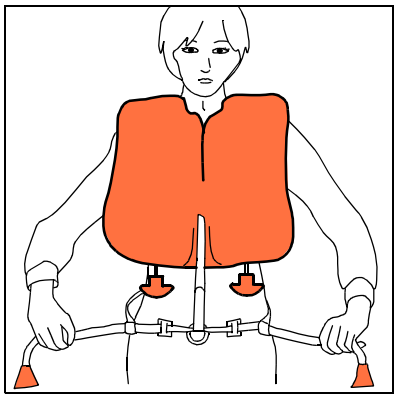

5. PULL STRAPS TIGHT

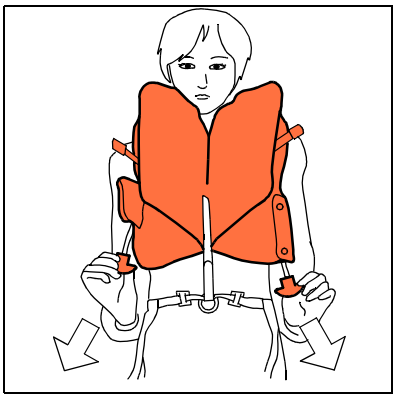

6. JERK DOWN ON INFLATION TABS.

INFLATE LIFE VEST JUST BEFORE JUMPING OUT OF THE AIRPLANE!
USING OVERWING EMERGENCY EXIT INFLATE LIFE VEST WHEN ON THE WING.

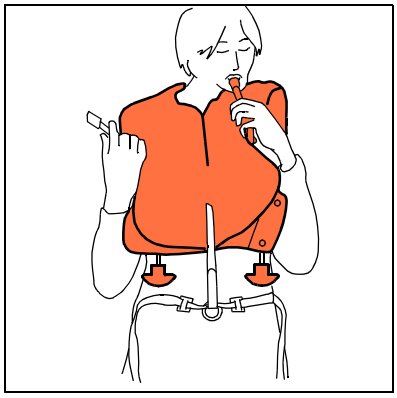

7. SHOULD IT BECOME NECESSARY, LIFE VEST CAN BE ORALLY INFLATED BY BLOWING INTO ORAL INFLATION TUBES.

NOTE

When using adult/child life vest for children, pass the straps between legs, fasten hooks. Inflate only one chamber.

CFO0801002_008

EMERGENCY EQUIPMENT (Cont)

LIFE RAFTS (OPTIONAL)

Two optional self contained 4 person life rafts are provided for passengers and crew. They are located either on the bottom shelf of the galley, crew closet, or in the aft pyramid cabinet, depending on cabin configuration. Refer to *Air Cruisers Company* Operator's Guide for further information.

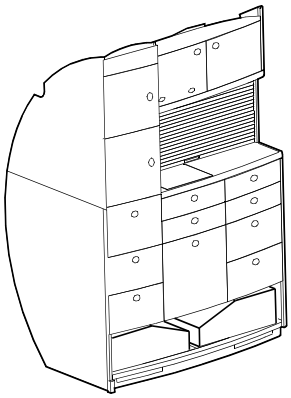

(DOORS REMOVED FOR CLARITY)
DELUXE GALLEY

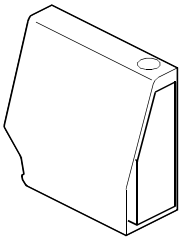

(DOOR REMOVED FOR CLARITY)
PYRAMID CABINET

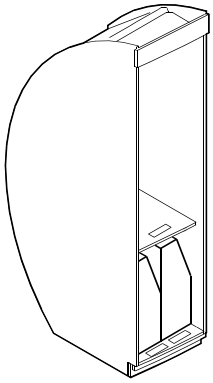

(DOOR REMOVED FOR CLARITY)
CREW CLOSET

CONTROLS AND INDICATIONS

PASSENGER OXYGEN CONTROL PANEL

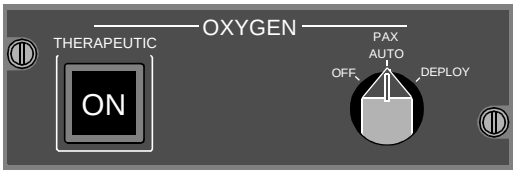

CFO0801002_004

PLACARDS

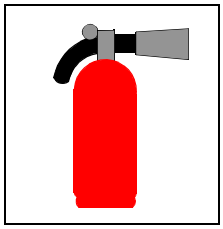

HALON FIRE
EXTINGUISHER

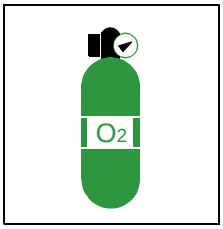

OXYGEN
CYLINDER

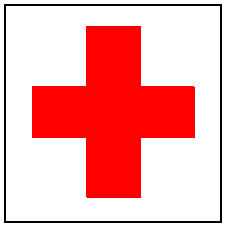

FIRST AID KIT

CREW MEMBER
LIFE-VEST UNDER
SEAT

CFO0801002_001

EICAS MESSAGES

The oxygen system messages are shown on the EICAS. Oxygen system messages and inhibits are listed below. A brief explanation of each message is provided.

MESSAGE	INHIBITS	MEANING	AURAL WARNING
OXYGEN QUANTITY LOW	TO/LAND	Oxygen is less than 700 liters	
OXYGEN VALVE CLOSED	TO/LAND	The oxygen bottle valve is closed or there is a miscompare in the number of bottles installed and the number of bottles selected on the Electro-Pneumatic Actuating Valve unit. This message will normally only occur on the ground	
PAX OXYGEN AUTO FAIL	TO/LAND	Passenger oxygen system has failed to deploy with the cabin altitude greater than 15 000 ft and the pax oxygen system in AUTO. Either the pax masks have not deployed or the pax oxygen system is not pressurized	
PAX OXYGEN OFF		The passenger oxygen switch has been selected OFF	
PAX OXYGEN ON		Pressure has been detected in the passenger oxygen lines.	

Table of Contents

Introduction 09-01-01
Fire Protection System Overview Schematic 09-01-03
Engine Fire Detection 09-01-04
Description 09-01-04
Components and Operation 09-01-04
Detection Loops 09-01-04
Fire Detection and Extinguishing Control Unit 09-01-04
Fire Extinguisher Bottles 09-01-04
FIREX Control Unit Schematic 09-01-05
Engine Fire Protection 09-01-06
L (R) Eng Fire Switches 09-01-06
Fire Ext 1 (2) Switches 09-01-06
FIREX Bottle Pressures 09-01-07
Auxiliary Power Unit Fire Protection 09-01-08
Description 09-01-08
Components and Operation 09-01-08
Fire Extinguisher Bottle 09-01-09
APU Fire Switch 09-01-09
Main Landing Gear Overheat Detection 09-01-10
Description 09-01-10
Components and Operation 09-01-11
Detection Loops 09-01-11
Fire Detection and Extinguishing Control Unit 09-01-11
Cargo Bay Fire Protection 09-01-11
Description 09-01-11
Components and Operation 09-01-11
Smoke Detectors 09-01-11
Controls and Indications 09-01-12
Systems Test 09-01-12
Description 09-01-12
EICAS Messages 09-01-13

INTRODUCTION

The fire protection system is divided into two subsystems:

- Fire detection
- Fire extinguishing

The fire detection system detects fire in the engines and APU and overheat detection in the main landing gear bays.

The fire extinguishing system provides extinguishing capability for the engines and APU.

The detection and extinguishing systems are tested and monitored from the flight deck.

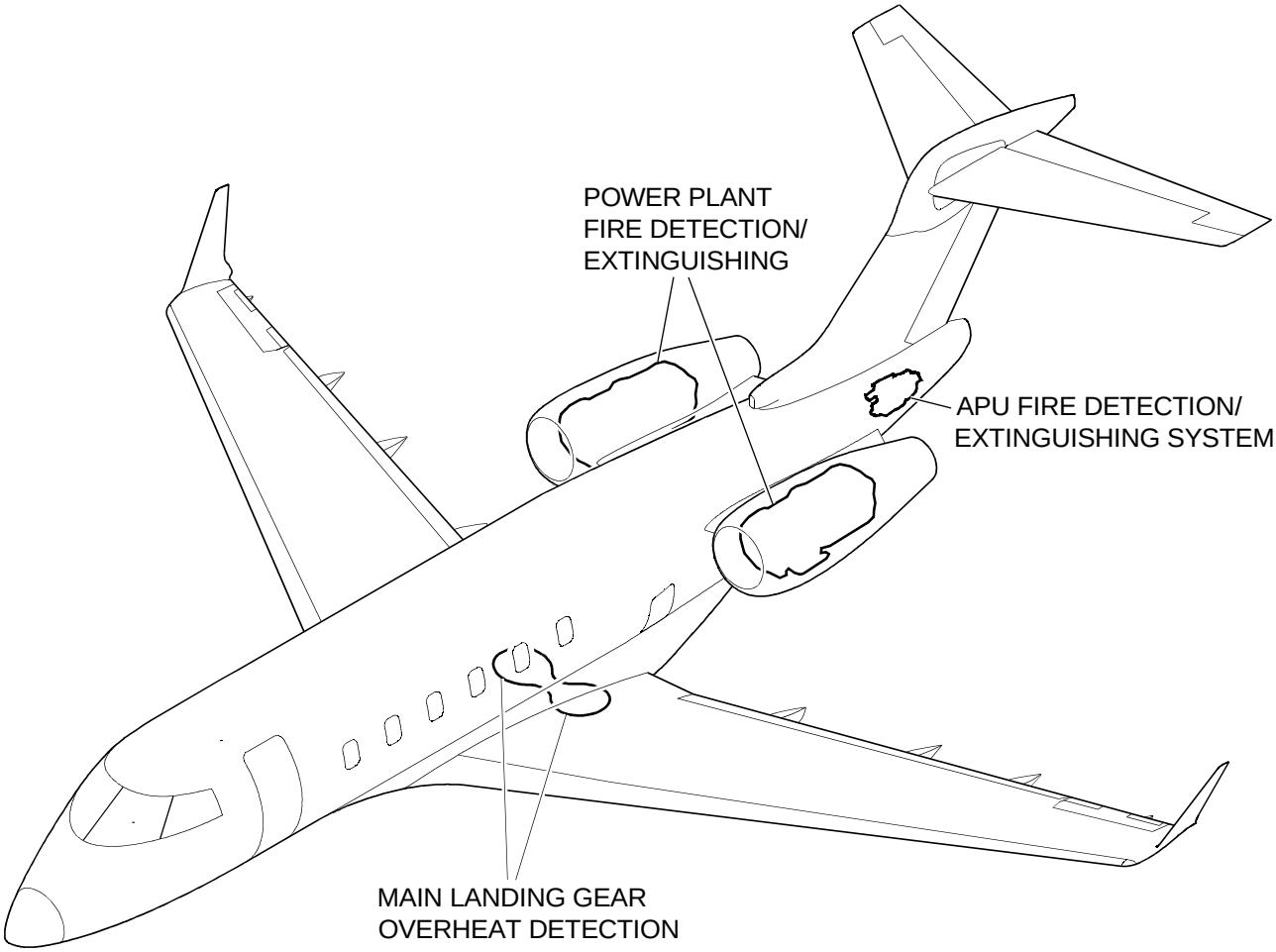

CFO0901002_004

INTRODUCTION (Cont)

FIRE DETECTION SYSTEM — BLOCK DIAGRAM

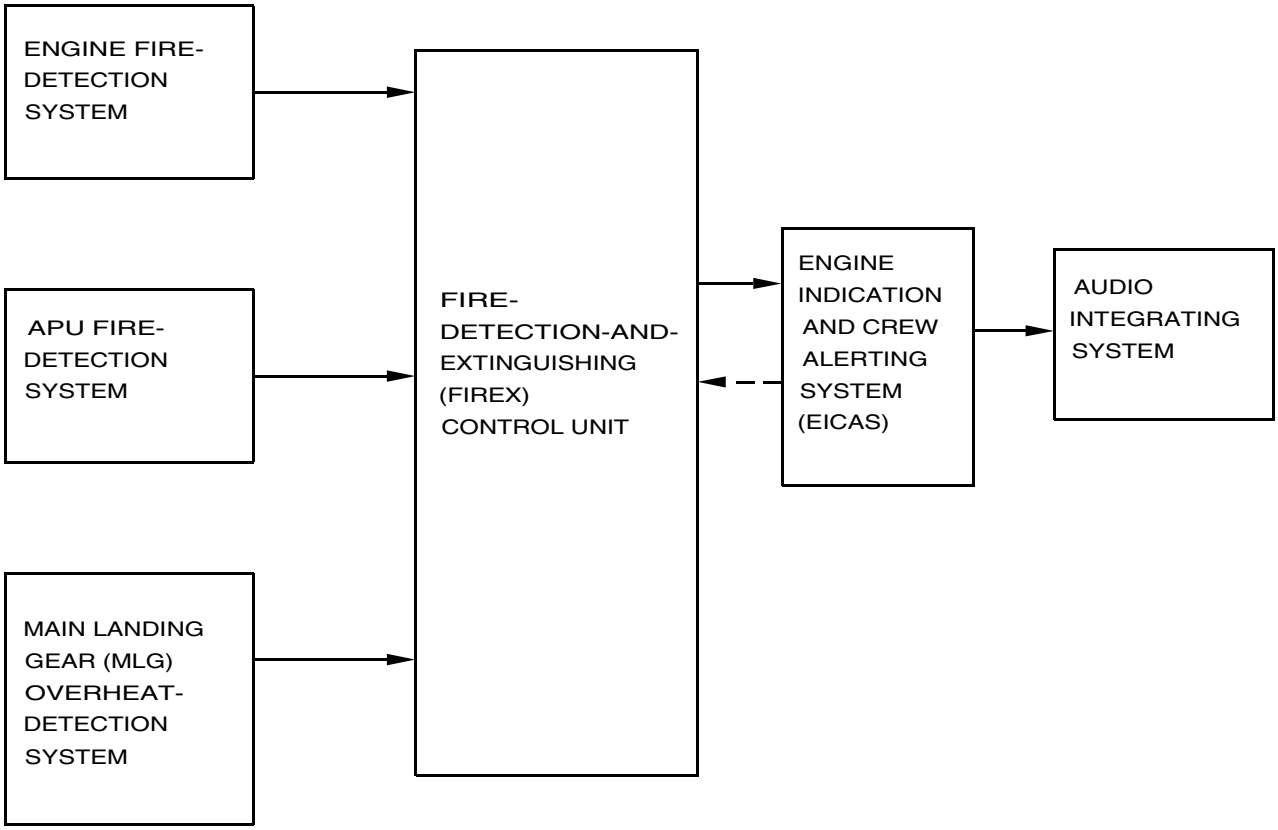

CFO0901002_007

FIRE PROTECTION SYSTEM OVERVIEW SCHEMATIC

1. ENGINE Panel.
2. Master WARNING/CAUTION LIGHTS.
3. Left MFD EICAS display.
4. FIREX Control Unit.
5. Left Main Wheel Well Overheat Detection.
6. Right Main Wheel Well Overheat Detection.
7. Fire Extinguisher Bottle No. 1.
8. Fire Extinguisher Bottle No. 2.
9. Left Engine Compartment Discharge Lines.
10. Right Engine Compartment Discharge Lines.
11. APU Compartment Discharge Lines.

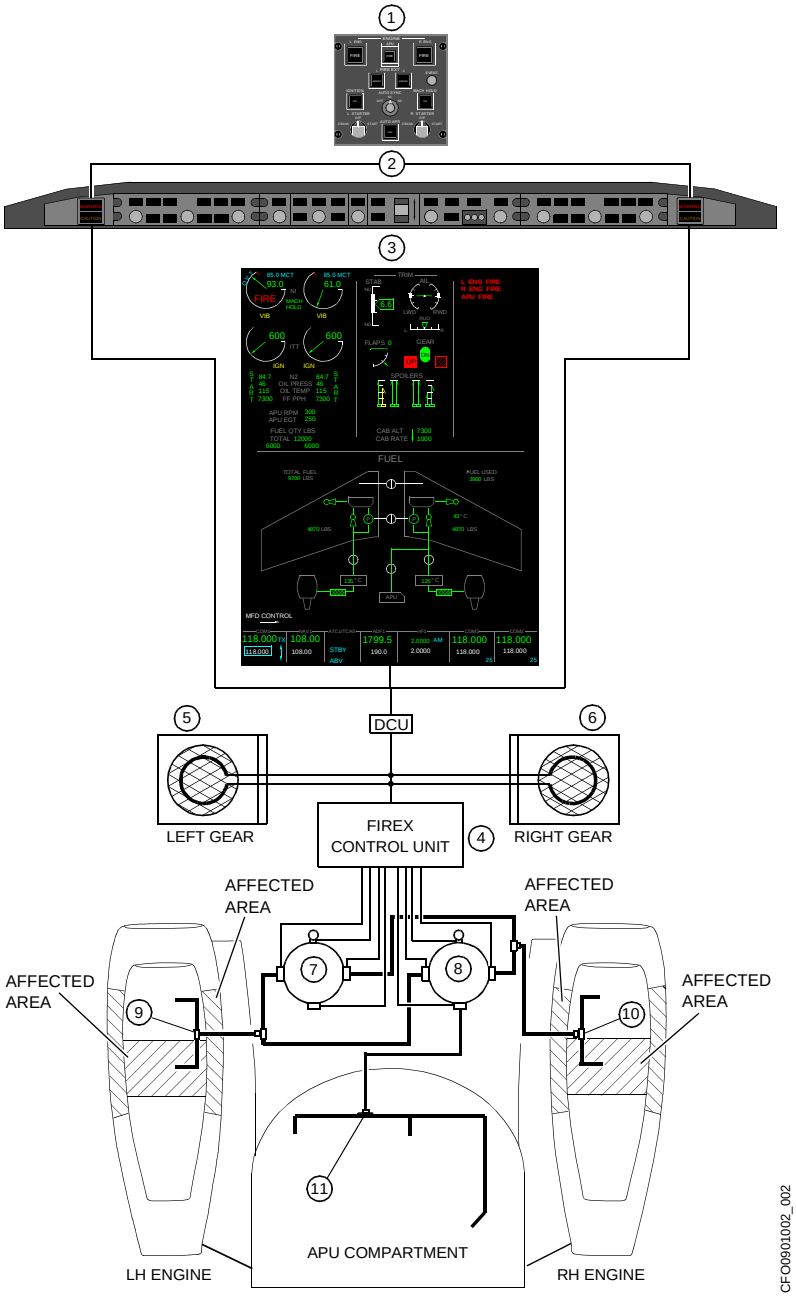

ENGINE FIRE DETECTION

DESCRIPTION

The engine fire detection system functions by detecting an overheat condition on the exterior of the engine.

If a fire is detected in the engine, the affected L or R ENG FIRE switch illuminates along with the master warning light, the master warning chimes, a L or R ENGINE FIRE (W) CAS message, a FIRE EI red in the N1 indicator, and the aural LEFT or RIGHT ENGINE FIRE.

The engine fire extinguishing system includes two bottles. If required, both bottles can be discharged into either engine.

COMPONENTS AND OPERATION

DETECTION LOOPS

Each engine is installed with dual fire detection loops. The loops provide fire detection around the core engine area, engine accessory area, forward nacelle and pylon areas. The loops are connected to the fire detection and extinguishing control unit (FIREX-CU). The loops are constructed of an outer metal sheathing and two internal wires that are separated by an insulating material (thermistor). One of the wires carries electrical current; the other is grounded to the outer sheathing at the control unit. The resistance of the thermistor decreases with an increase in temperature.

When the electrical resistance decreases to a trip point, electrical current from the live internal wire conducts to the second internal wire and a fire indication is generated.

This loop system minimizes the possibility of false fire warnings. Both loops must sense the fire or overheat condition under similar parameters before flight deck fire indications are generated.

FIRE DETECTION AND EXTINGUISHING CONTROL UNIT

The fire detection and extinguishing control unit is the aircraft fire protection system electronic control unit that monitors the electrical resistance of the loops. The control unit is located in the aft equipment bay. When both loops experience the same decrease in resistance within a preset time, the control unit sends a fire signal to the EICAS. Each individual control circuit and its related sensing loop is monitored. If one loop malfunctions, the second loop can still detect a fire.

FIRE EXTINGUISHER BOTTLES

Two fire extinguisher bottles are installed in the aft equipment bay. Each are equipped with a pressure switch, pressure gauge, two discharge heads on the number 1 bottle, and three discharge heads on the number 2 bottle. Each squib has two firing bridgewires fed by separate electrical circuits and are installed on each fire bottle. The bottles are filled with Halon 1301.

If required, both bottles can be discharged into one engine. The selection of the L or R ENG FIRE switch determines which squib is fired. Only bottle No. 2 can be discharged into the APU compartment.

Both fire extinguishers are installed outside the aircraft’s pressure bulkhead in the aft equipment bay. For the left and right engines, a check tee is placed at the intersection between the plumbing from the two bottles and the common plumbing going to the fire zone. The check tee prevents extinguishing agent from the second discharged bottle from back filling into the bottle that was discharged first.

ENGINE FIRE DETECTION (Cont)

FIREX CONTROL UNIT SCHEMATIC

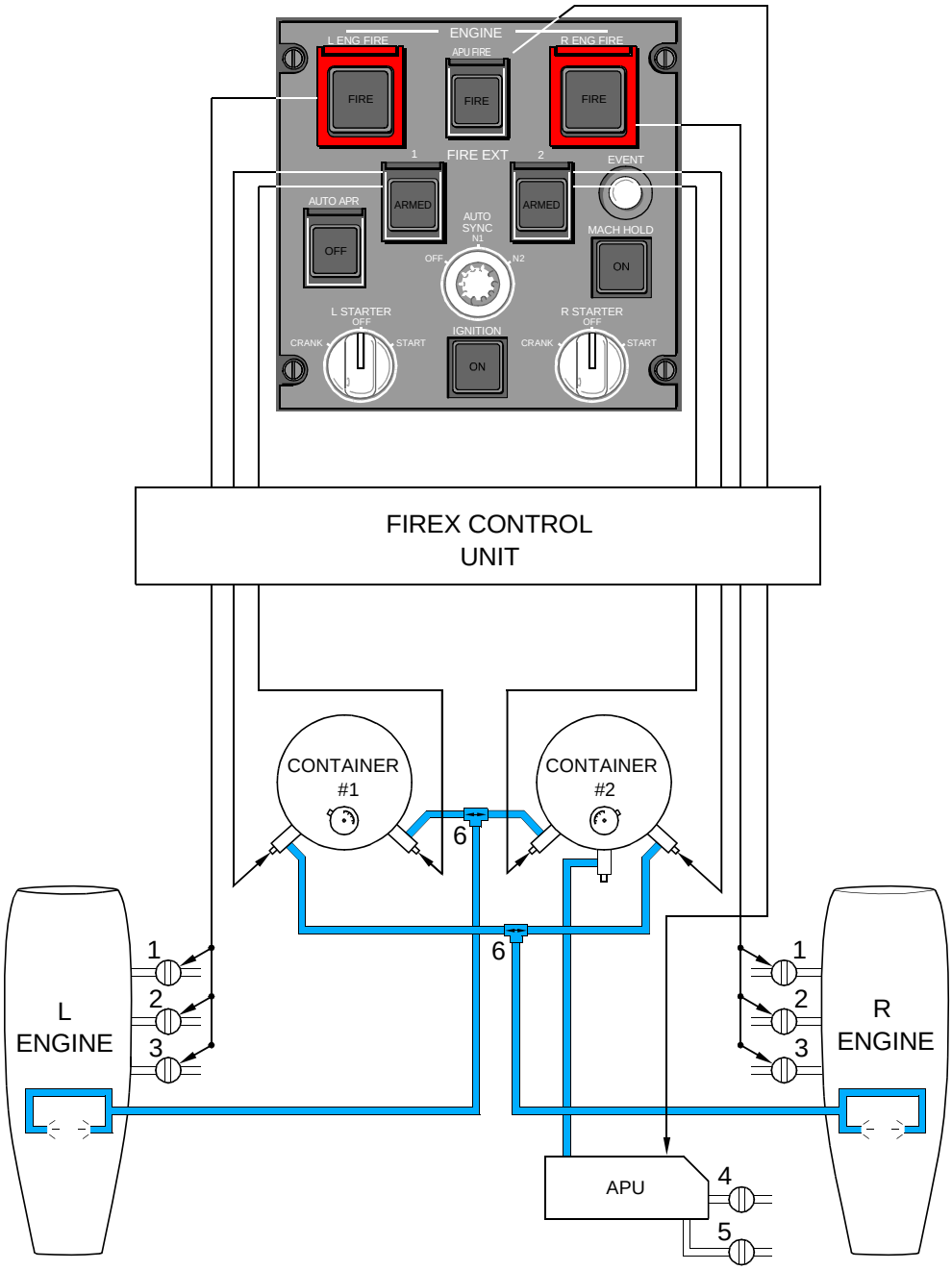

1- BLEED AIR VALVE
2- FUEL SHUTOFF VALVE
3- HYDRAULIC SHUTOFF VALVE
4- APU BLEED SHUTOFF VALVE
5- APU FUEL SHUTOFF VALVE
6- TWO WAY CHECK VALVE

LEGEND
ENGINE DISCHARGE

CFO0901002_011

ENGINE FIRE PROTECTION

L (R) ENG FIRE SWITCHES

When the ENG FIRE switch is pressed:

- Applicable (left or right) squib on both bottles are armed and both EXT 1 and EXT 2 switches illuminate ARMED
- Fuel shutoff valve closes
- Bleed-air shutoff valves closes
- Hydraulic shutoff valve closes
- Generator is selected offline
- FADEC commands engine shutdown

FIRE EXT 1 (2) SWITCHES

When the FIRE EXT 1 or FIRE EXT 2 switch is pressed, electrical current fires the squib in the associated bottle and pressurized Halon is directed into the engine fire zones. The selection of the L or R ENG FIRE switch determines which engine the bottles are discharged into the engine nacelle. During an engine fire, FIRE EXT 1 should always be depressed first, regardless of which engine has the fire. The APU compartment can only be extinguished by bottle No. 2. Therefore, if the fire is extinguished with the bottle No. 1, then bottle No. 2 remains for use on the other engine or the APU if needed.

After an extinguisher bottle is discharged, the ARMED light on the FIRE EXT switch extinguishes and the FIREX BTL 1 (2) LOW (A) CAS illuminates.

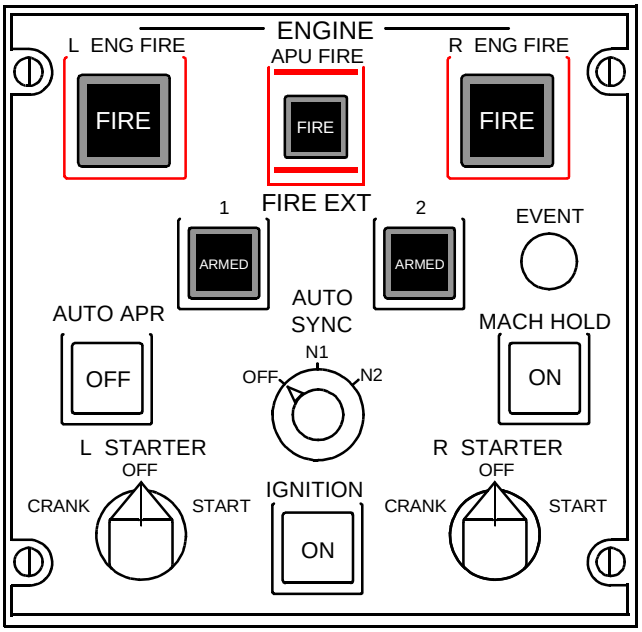

ENGINE FIRE PROTECTION (Cont)

FIREX BOTTLE PRESSURES

During checks on the FIREX bottles, the following pressure/temperature chart can be used to determine if bottle pressure is within acceptable limits for bottle temperature. The table provided applies to bottles with 4.3 lb agent.

Minimum/Maximum FIREX Bottle Pressure (4.3 lb nominal weight)		
	Gage reading (psig)	
Temp °C	Minimum	Maximum
-55	251	343
-50	277	354
-45	288	367
-40	302	380
-35	315	394
-30	330	410
-25	347	427
-20	365	445
-15	384	465
-10	404	486
-5	427	508
0	450	533
5	476	559
10	503	587
15	532	616
20	578	648
25	596	681
30	631	717
35	668	755
40	708	795
45	750	838
50	796	886
55	849	941
60	895	982
65	964	1096
70	1032	1165
75	1100	1235
80	1168	1305
85	1235	1375
90	1303	1445
95	1371	1515
100	1439	1585

AUXILIARY POWER UNIT FIRE PROTECTION

DESCRIPTION

The auxiliary power unit (APU) fire detection system functions by detecting an overheat condition within the APU enclosure. An APU fire can only be extinguished from bottle No. 2.

The APU fire protection has a ground mode for unattended operation and a flight mode.

On the ground, when a condition is detected, the APU shuts down automatically. Five seconds later, the APU fire bottle automatically discharges Halon into the APU enclosure.

In flight, when a fire condition is detected and the APU FIRE switch is pushed, the APU shuts down and arms the discharge cartridge on the number 2 container. The flight crew must discharge the bottle by pushing the FIRE EXT 2 switch.

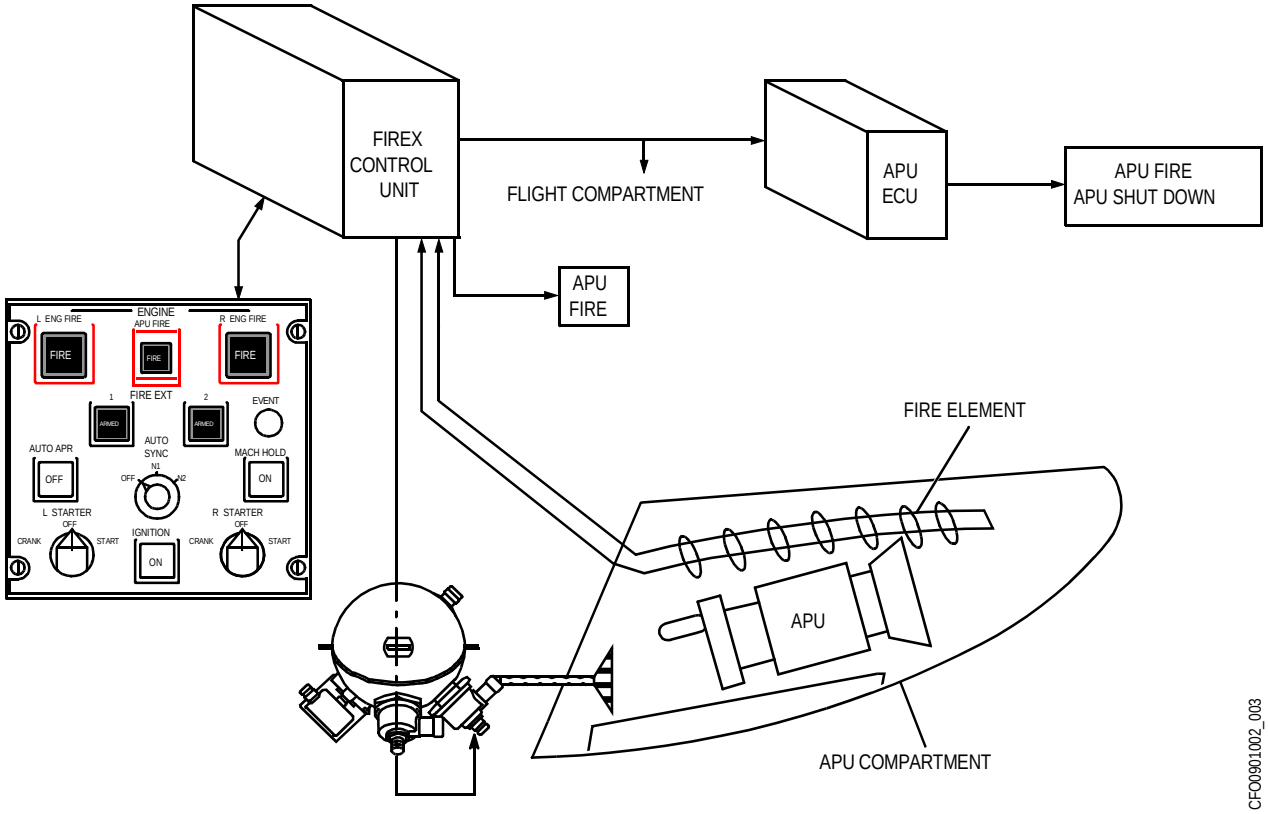

COMPONENTS AND OPERATION

DETECTION LOOPS

The APU enclosure is fitted with dual fire detection loops. The loops are connected to the fire detection and extinguishing control unit. The loops are constructed of an outer metal sheathing and two internal wires that are separated by an insulating material (thermistor). One of the wires carries electrical current, the other is grounded to the outer sheathing at the control unit. The resistance of the thermistor decreases with an increase in temperature.

When the electrical resistance decreases to a trip point, electrical current from the live internal wire conducts to the second internal wire and a fire indication is generated.

This dual loop system minimizes the possibility of false fire warnings. Both loops must sense the fire or overheat condition under exacting parameters before flight deck fire indications are generated.

AUXILIARY POWER UNIT FIRE PROTECTION (Cont)

FIRE EXTINGUISHER BOTTLE

Discharge of bottle 2 to the APU compartment is controlled exclusively by the cockpit APU FIRE switch during flight. Discharge to the APU on the ground can be commanded by either the cockpit switch or automatically by the FIREX-CU during APU unattended mode operation. For both the main powerplants and APU, two switches are required to discharge the extinguisher. The first switch is a guarded latching switch that shuts down and isolates the engine/APU and arms the corresponding discharge cartridges on the bottle(s). The second switch is a momentary switch that applies discharge current to the selected cartridge. A pressure switch, a pressure gauge and one explosive squib for the APU, is installed on the fire bottle. The bottle is filled with Halon 1301.

APU FIRE SWITCH

If a fire is detected in the APU enclosure, the APU FIRE switch illuminates (along with the master warning light, the master warning chimes, an APU FIRE (W) CAS message, and the aural APU FIRE). When the APU FIRE switch is depressed:

- Bottle 2 squib is armed and EXT 2 switch illuminates ARMED
- APU fuel shutoff valve closes
- APU electronic control unit closes the APU fuel metering valve
- APU bleed-air shutoff valves closes
- APU generator is selected offline

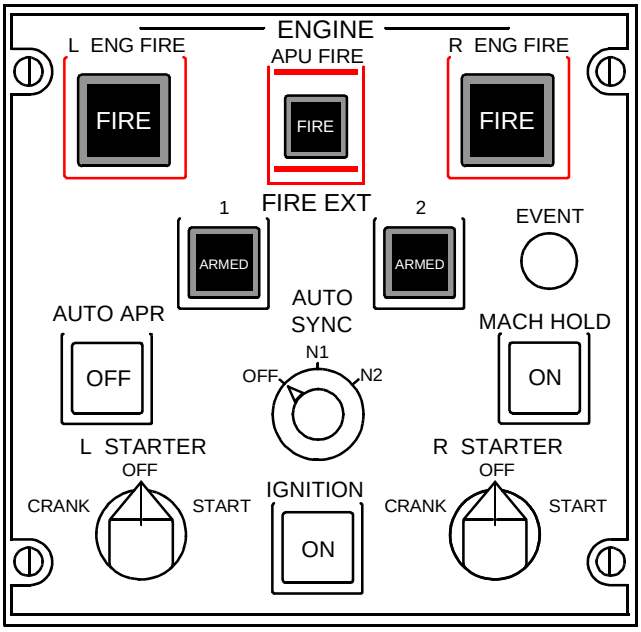

MAIN LANDING GEAR OVERHEAT DETECTION

DESCRIPTION

The Challenger 300 includes two main landing gear bays (MLG), also referred to as main wheel wells. due to the possibility of brake or tire overheat during takeoff and the fact that the MLG bays are constructed from composite material, an overheat detection system has been installed as part of the aircraft's FIREX system.

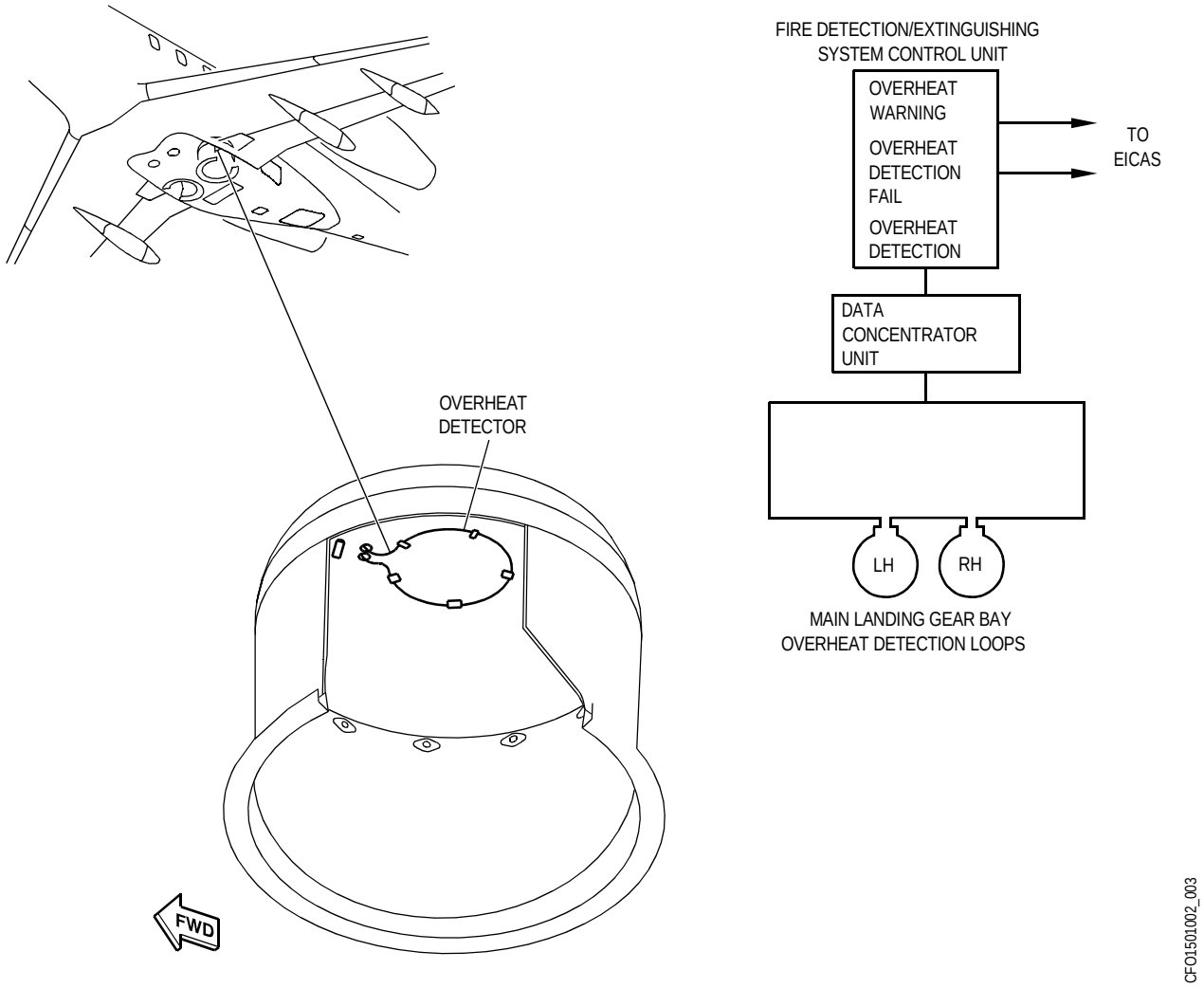

MAIN LANDING GEAR OVERHEAT DETECTION (Cont)

COMPONENTS AND OPERATION

DETECTION LOOPS

The main landing gear bay is protected by a single overheat detection loop for each main landing gear bay and a dual channel overheat detection unit. Each overheat sensing loop is installed around the top of the inner surface of each main wheel bin.

The overheat detection loops are connected to the Fire Detection and Extinguishing control unit (FIREX-CU). The loops are constructed of an outer metal sheathing and two internal wires that are separated by an insulating material (thermistor). One of the wires carries electrical current, the other is grounded to the outer sheathing at the control unit. The resistance of the thermistor decreases with an increase in temperature.

When the electrical resistance decreases to a trip point, electrical current from the live internal wire conducts to the second internal wire and a fire indication is generated.

FIRE DETECTION AND EXTINGUISHING CONTROL UNIT

The control unit monitors the electrical resistance of each single loop system. When the loop experiences a decrease in resistance over a preset time, the control unit sends an overheat signal to the Data Concentrator Unit (DCU), which routes them to the EICAS. When this occurs, the master warning lights illuminate, a triple chime sounds, and a GEAR BAY OVHT (W) CAS illuminates.

CARGO BAY FIRE PROTECTION

DESCRIPTION

A smoke detector is installed in the cargo bay. A fire in this area must be extinguished with a portable fire extinguisher. *Refer to Chapter 8, OXYGEN AND EMERGENCY EQUIPMENT for information regarding portable fire extinguishers*.

COMPONENTS AND OPERATION

SMOKE DETECTORS

A single smoke detector is mounted on the ceiling of the cargo bay. If smoke is detected, the master warning lights illuminate, the master warning chime sounds, and a CARGO SMOKE (W) CAS message illuminates.

NOTE: Operation of mobile transceivers in close proximity to the smoke detectors or exhaust fumes from ground handling equipment may cause a false alarm.

CONTROLS AND INDICATIONS

SYSTEMS TEST

DESCRIPTION

FIRE DET test functions are available on the SYSTEMS TEST rotary switch located on the pedestal near the PARK/EMER brake handle.

The engine, APU and main landing gear bay, fire protection systems are continuously monitored by the fire detection and extinguishing system (FIREX) and no preflight test is required. However, these systems can be tested when desired or when directed by a flight manual procedure. When the SYSTEMS TEST switch is rotated to the FIRE DET position and then pressed, the following will occur:

- Warning (W) CAS messages illuminate:
    - L ENGINE FIRE
    - R ENGINE FIRE
    - APU FIRE
    - MLG BAY OVHT
- Control unit tests all detection and extinguishing components
- FIRE SYS IN TEST (S) CAS illuminates
- Both master warning lights flash
- Master warning chime sounds
- For approximately 15 seconds, a triple chime is heard and a “LEFT ENGINE FIRE” aural voice repeats several times.
- L ENG FIRE, R ENG FIRE, and APU FIRE switches illuminate
- FIRE EXT 1 and FIRE EXT 2 switches illuminate
- Upon satisfactory completion, a FIRE SYS TEST OK (S) CAS illuminates

If any component does not pass the test, the FIRE SYS TEST OK (S) CAS will not illuminate. A CAS message illuminates indicating which component failed. The test takes approximately 10 seconds to complete.

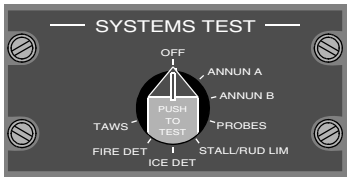

CFO0901002_010

EICAS MESSAGES

The fire protection system CAS messages and voice aurals are listed in the table below. A brief explanation of each message is provided.

MESSAGE	INHIBITS	MEANING	AURAL WARNING
APU FIRE		Fire has been detected in the APU compartment	
L (R) ENGINE FIRE		The L (R) ENGINE FIRE CAS, FIRE EI in the N1 indicator, FIRE indication in the L(R) ENG FIRE switch, or “LEFT (RIGHT) ENGINE FIRE’ voice message indicates that the engine fire detection loop has activated. An engine fire is usually accompanied by other indications, such as: excessive ITT, erratic or rough engine operation, fluctuating engine indications, or smoke in the cabin.	“Left (Right) Engine Fire”
CARGO SMOKE		Smoke has been detected in the cargo (baggage) area	
GEAR BAY OVHT	TO/LAND	An overheat condition has been detected in the main landing gear bays	
APU FIRE DET FAIL	TO/LAND	An APU fire detection system has detected a failure that will not allow the detection system to indicate a fire	
CARGO SMOKE DET FAIL	TO/LAND	The cargo smoke detection system has failed	
L (R) FIRE DET FAIL	TO/LAND	The engine fire detection system has failed	
FIRE SYS FAULT	TO/LAND	The fire detection and extinguishing system has detected a fault	
FIREX APU SQUIB FAIL	TO/LAND	APU fire extinguisher squib on bottle #2 has failed (NO low pressure indication)	
GEAR BAY DET FAIL	TO/LAND	The gear bay overheat detection has failed	
FIRE SYS FAULT	TO/LAND	The FIREX control unit has detected a fault	
FIREX BTL 1 (2) FAULT	TO/LAND	The respective bottle squib for the left or right engine has failed	
FIREX BTL 1 (2) LOW	TO/LAND	The respective bottle pressure is low	
FIRE SYS IN TEST		The fire detect test system is conducting the manually activated system test	
FIRE SYS TEST OK		The fire detect test system has passed the system test	

Table of Contents

Introduction 10-01-01
Description 10-01-01
Primary Flight Controls 10-01-02
Components and Operations 10-01-02
Ailerons and Multifunction Spoilers 10-01-02
Rudder 10-01-03
Yaw Damper 10-01-06
Elevators 10-01-07
Pitch Disconnect 10-01-08
Elevator Control Schematic 10-01-09
Secondary Flight Controls 10-02-01
Description 10-02-01
Components and Operation 10-02-02
Aileron Trim 10-02-02
Rudder Trim 10-02-02
Horizontal Stabilizer Trim 10-02-02
Configuration Trim 10-02-03
Mach Trim 10-02-03
Aileron Trim Schematic 10-02-04
Horizontal Stabilizer Trim Schematic 10-02-05
Flaps 10-02-06
Components and Operation 10-02-06
Flap Alerting 10-02-06
Flap Control Lever 10-02-07
Flap Position Indication 10-02-07
Spoiler System 10-02-08
Components and Operation 10-02-09
Spoiler Electronic Control Unit (SECU) 10-02-09
Flight Spoilers Lever 10-02-09
Roll Spoilers 10-02-10
Roll Spoilers Disconnect 10-02-10
Flight Spoiler Schematic 10-02-11
Ground Spoilers 10-02-12
Description 10-02-12
Components and Operation 10-02-12
Takeoff Configuration Warning System 10-02-13
Description 10-02-13
Components and Operation 10-02-13
Proximity Sensing System 10-02-13
Description 10-02-13
Components and Operation 10-02-13
Proximity Sensing Electronic Unit 10-02-13
Stall Protection System 10-02-13
Description 10-02-13
Components and Operation 10-02-13
Stick Pusher Disconnect Features 10-02-15
Controls and Indications 10-02-16
Flap Control Lever 10-02-16
EICAS Trim Status Display 10-02-16
Flight Control Synoptic Page 10-02-17
EICAS Messages 10-02-18

INTRODUCTION

The primary flight controls are the elevators, rudder, ailerons and roll spoilers. The ailerons are cable operated. The spoilers are electrically actuated and hydraulically operated. Cables connect the control column and rudder pedals to the hydraulic power control units for the elevators and rudder. The elevators and rudder have a mechanical reversion capability in the event of a dual hydraulic system failure.

The secondary flight controls consist of horizontal stabilizer, aileron, and rudder trims, flaps, and spoilers when operated symmetrically (flight and ground spoilers).

DESCRIPTION

The primary flight controls are arranged conventionally with rudder pedals and a control wheel and column for both the pilot and copilot. The roll spoilers, ailerons, elevators, and rudder are operated by means of conventional dual control wheels, dual control columns, and dual rudder pedal assemblies. The aileron system is a reversible mechanical cable system. The spoilers are controlled through an electronic/hydraulic fly-by-wire system. The elevator and rudder are mechanically controlled and hydraulically powered systems. The elevator and rudder has a manual reversion capability in the event of a dual hydraulic failure.

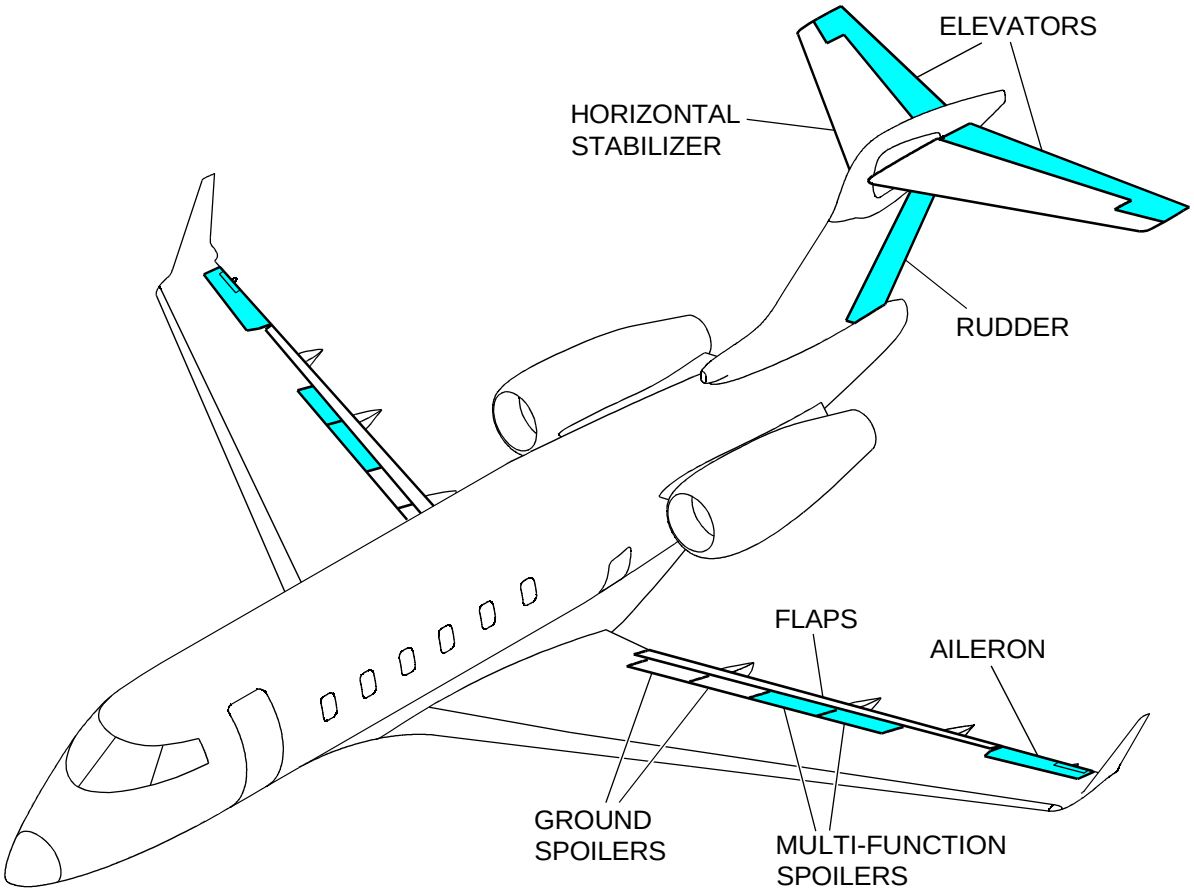

CFO1001002_013

PRIMARY FLIGHT CONTROLS

COMPONENTS AND OPERATION

AILERONS AND MULTIFUNCTION SPOILERS

The aileron control cable runs to both control wheels and both ailerons. The roll disconnect mechanism disconnects the pilots control wheel from the aileron circuit. When disconnected, the pilot controls the roll spoilers and the copilot controls both ailerons. Normally the aileron and roll spoilers are interconnected and there is a simultaneous and coordinated movement of all lateral control surfaces from either pilot station.

Moving the control wheels also generates a signal that is sent to the spoiler electronic control units (SECU 1 and SECU 2). Dual redundant modules within the SECU control the extension/retraction of the multifunction spoilers (MFS). The SECUs combine the control wheel signals with other information to determine the required multifunction spoiler panel deflection for any given airplane configuration. There are four spoiler panels on each wing. The two outboard panels are the multifunction spoilers that operate asymmetrically in a roll, symmetrically for flight spoilers, and on the ground as ground spoilers. The two inboard spoilers only operate on the ground. A single power control unit is used on each spoiler. The MFS operate on the down-going wing only to assist the ailerons in roll control. In order to reduce roll control forces, an aileron balance geared tab is mounted on each aileron. The balance tabs have a maximum ±15 degrees of travel each side of the aileron chord line. It consists of a constant length push rod hinged at both ends on brackets rigidly mounted on the wing at one end and on the balance tab at the other end. The mechanism acts as a linkage with the aileron surface being the driving link and the geared balance tab being the driven link. The aileron balance tab is geared to move in the opposite direction of its corresponding ailerons movement. A roll damper is mounted on the pilot control column. Under normal operation, the roll damper acts like a quadrant and transmits all of the crew member's inputs. In case of any one aileron cable failure, the roll damper limits the rate the control wheel deflects (driving the roll spoilers) to a recoverable level. To prevent damage to the aileron surfaces from wind gusts when the aircraft is parked, a gust lock mechanism is incorporated to lock the left drive quadrant in the neutral position. The mechanism is actuated by the crew, via a telescoping gust lock lever mounted in the throttle quadrant. The lever moves a cable, that engages a spring loaded pawl into a quadrant mounted cam recess. When the gust lock is engaged, the throttles are physically prevented from being moved above idle. Aileron position is displayed on the EICAS FLIGHT CONTROL synoptic page. A full-scale deflection of the AIL position indicator corresponds to maximum aileron deflection.

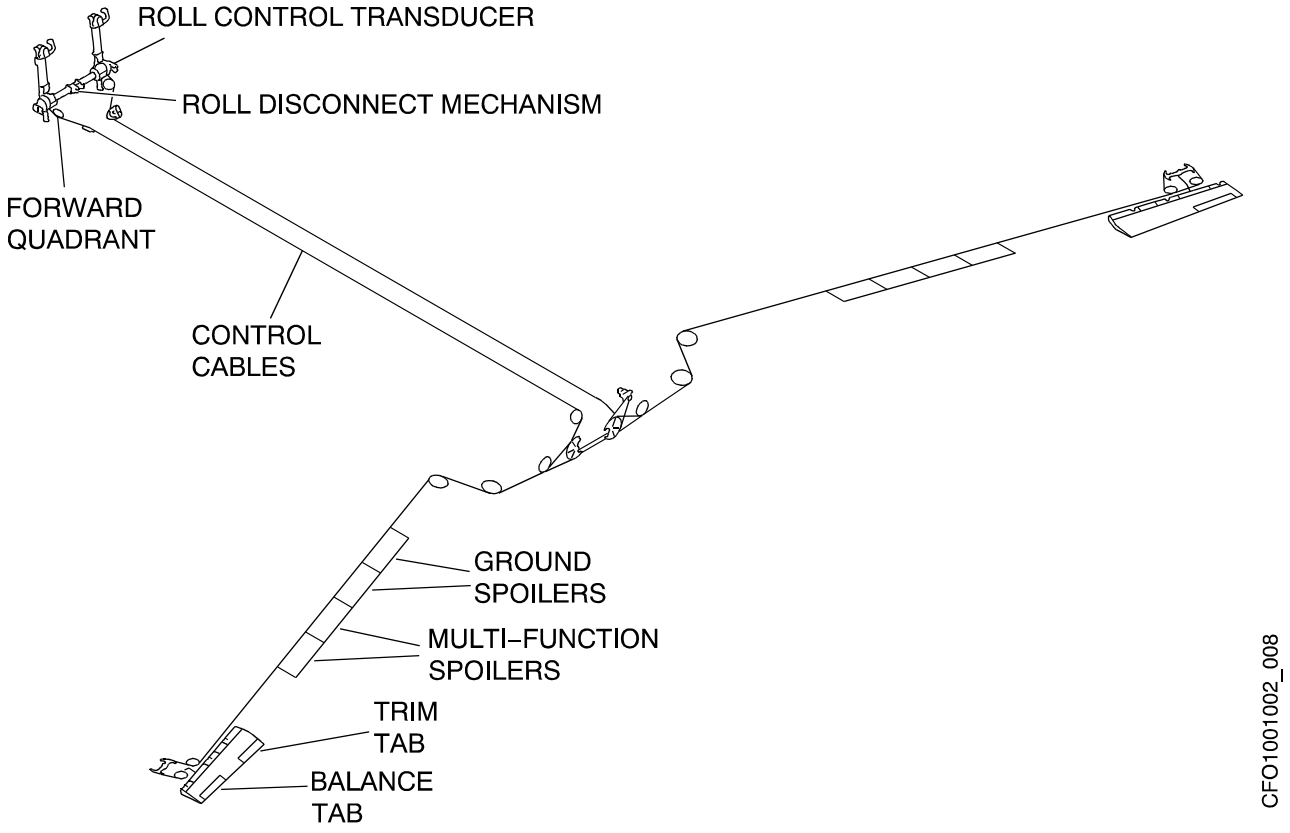

PRIMARY FLIGHT CONTROLS (Cont)

ROLL DISCONNECT

The roll disconnect allows the flight crew to isolate the left control wheel from the aileron control system. The roll disconnect mechanism is mounted on the left control wheel. It is comprised of a lever, a shaft, a stud roller, a cam, and two torsion springs. The lever and the shaft are held in axial alignment by two bushings.

During normal operation, the roller position is held into the cam detent by the torsion springs, allowing the pilot control wheel and the input quadrant to rotate as one single unit.

In the event of a jam in the mechanical circuit, the pilot can disconnect from the aileron circuit and retain roll control through the multifunction spoilers. However, if a jam occurs in the pilot control wheel, the pilot can disconnect from the circuit thus permitting the copilot to retain control of the ailerons.

A pull of the roll disconnect mechanism lever retracts the roller which is held in the disconnect position by a spring-loaded hook. This action uncouples the pilot control wheel and the pilot input quadrant and allows the control wheel to rotate freely. This disconnect feature allows in-flight reset once the roller and the cam are realigned and the disconnect lever is released. A microswitch senses the retraction of the roller and sends a signal of the disconnect status and a ROLL DISCONNECT (W) CAS message will be illuminated.

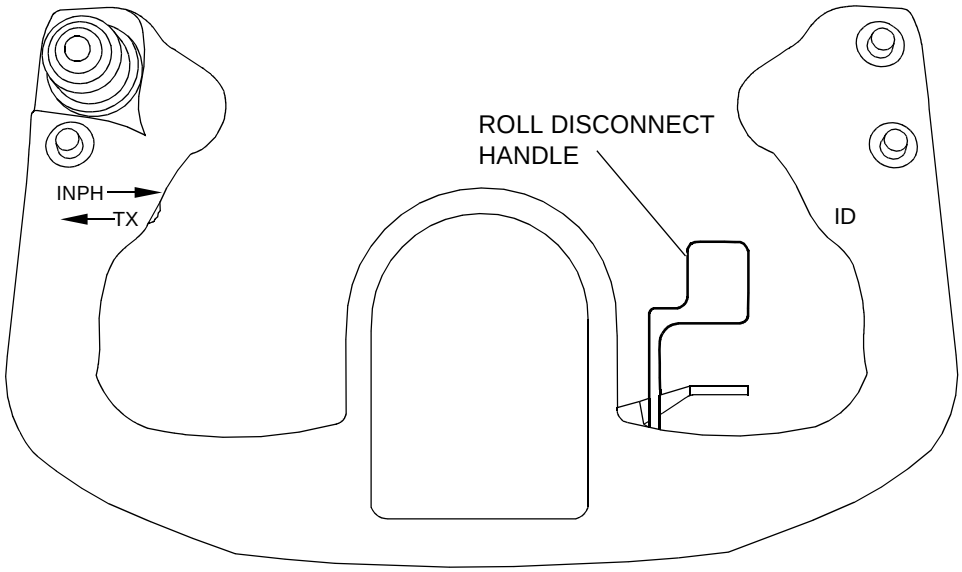

FO1001002_014

RUDDER

RUDDER CONTROL SYSTEM

The rudder provides directional control about the yaw axis. The system is mechanically controlled and hydraulically powered. The mechanical part of the system has control pedals, levers, pulleys and cables which connect to two hydraulic power control units (PCUs) in the vertical stabilizer. The PCUs cause the rudder to move in proportion to the flight-crew's control pedal input. A rudder-control feel unit supplies a simulated pedal load to the flight crew.

The pilot and copilot rudder pedal assemblies are both connected to the forward quadrant assembly, with no means to disconnect one from the other. Two cable systems beginning at the forward quadrants follow the same path in the fuselage until they reach the engine rotor burst zone, where they are routed separately towards the rear fuselage. In the event of a severed single cable in the rotor burst zone, the aft quadrant still receives input from the unaffected cables, thus retaining rudder system functionality. On the ground, trapped hydraulic fluid provides rudder control surface gust lock damping when the hydraulic systems are depressurized.

Rudder position is displayed on the EICAS FLIGHT CONTROL synoptic page. A full-scale deflection of the rudder position indicator corresponds to maximum rudder travel.

PRIMARY FLIGHT CONTROLS (Cont)

RUDDER POWER CONTROL UNIT (PCU)

There are two hydraulic rudder PCUs attached to the rear spar of the vertical stabilizer. The left hydraulic system energizes the upper rudder PCU and the right hydraulic system energizes the lower rudder PCU. If the right hydraulic system loses pressure, the lower rudder PCU is powered by the auxiliary hydraulic system.

The rudder PCUs also give protection to the rudder control surface against gust loads while the aircraft is on the ground.

RUDDER TRAVEL LIMITER

The rudder travel limiter actuator puts a limit on the movement of the rudder control surface, as a function of airspeed. This insures that the aerodynamic force on the rudder is not more than the structural limit of the vertical stabilizer. The horizontal-stabilizer-trim electronic-control unit (HST ECU) controls the movement of the rudder travel limiter-actuator.

PRIMARY FLIGHT CONTROLS (Cont)

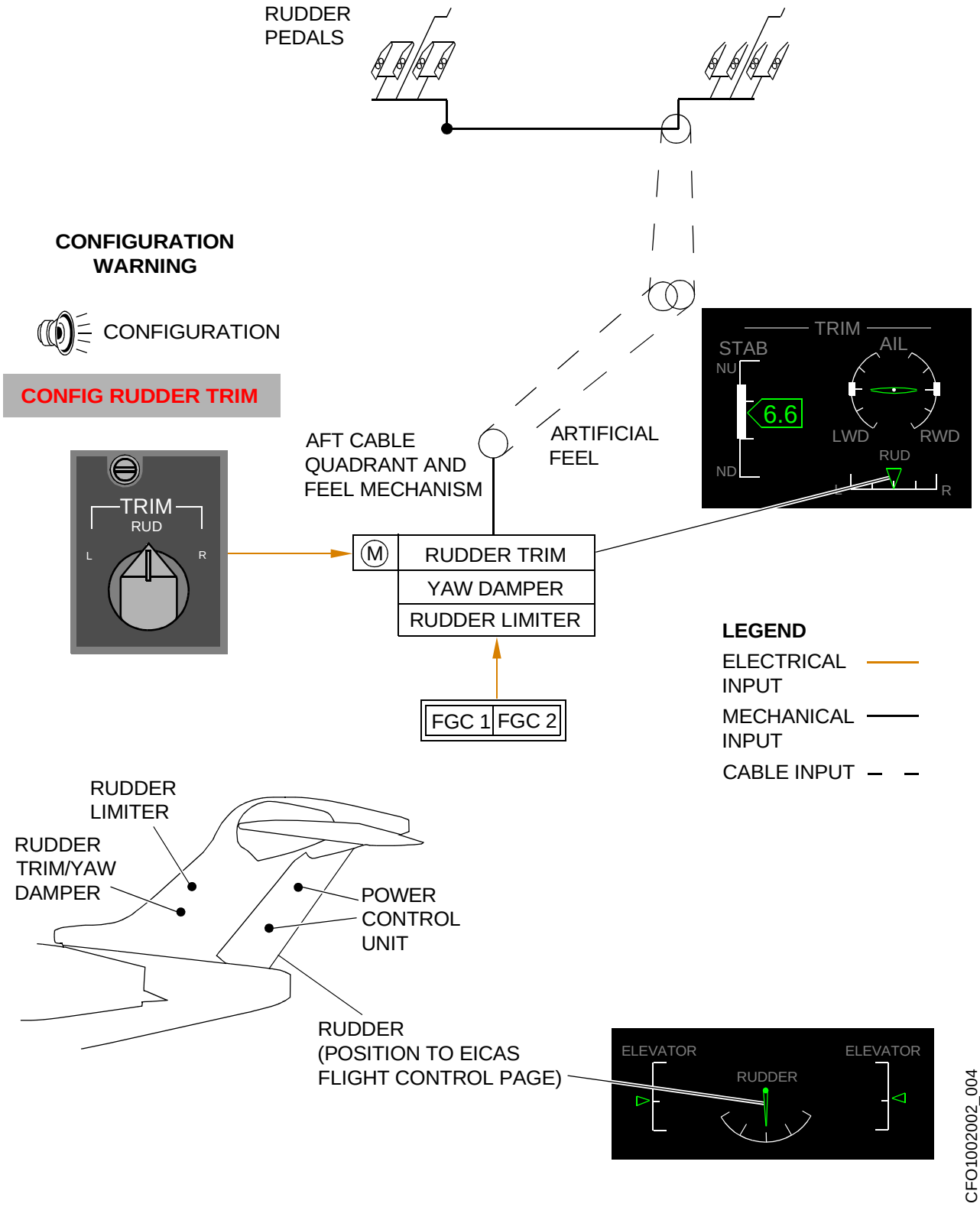

PRIMARY FLIGHT CONTROLS (Cont)

YAW DAMPER

The yaw damper (YD) provides damping of the aircraft inherent dutch roll characteristic using yaw rate information from an attitude heading computer. It also provides turn coordination using roll attitude from the attitude heading computer.

Since the yaw damper is installed in a series configuration, yaw damper movement will not move the pilot's pedals. The system is mechanically limited to a ±5° of rudder motion.

The yaw damper is active while on the ground if YD has been selected on the flight guidance panel. This allows the flight crew to observe YD activity for system checks. When the aircraft accelerates above 60 kt IAS, the damping function is smoothly disabled until weight is off the wheels, at which point it is re-enabled. The yaw damper may be engaged independently of the autopilot, but if the autopilot is engaged, the yaw damper is automatically engaged.

The functions of the flight guidance YD switch are as follows:

- Engages or disengages the yaw damper, if no detected failures and/or cutout conditions exist
- Disengaging the YD disengages the autopilot

The FGP AP/YD DISC bar is used to the control the YD as follows:

- Provides a positive means of disengagement. The switch is manually positioned and the YD cannot engage when the bar is in the down (disconnect) position

When the yaw damper channel fails or disconnects, an amber YAW DAMPER FAIL (C) CAS message is displayed.

PRIMARY FLIGHT CONTROLS (Cont)

ELEVATORS

Pitch control is provided by the elevators and supplemented by a moveable horizontal stabilizer. Each elevator is hydraulically powered by two power control units and mechanically controlled via cable runs and quadrants through fore and aft displacement of either control column. Normally, the control systems are interconnected and there is simultaneous movement of both elevators. If the elevator split is greater than 7.5°, an ELEVATOR SPLIT (C) CAS message will be displayed.

Elevator position is displayed on the FLIGHT CONTROLS synoptic page. A full-scale deflection of the elevator's position indicator corresponds to maximum travel.

Pilot inputs to the elevator are through dual control columns. The control columns are normally connected through a torque tube, so they rotate in unison.

A control rod transmits pilot commands to the left and right forward quadrants. The left side quadrant assembly includes a cable interface with the stick pusher servo of the stall protection system.

Separate left and right cable circuits carry the elevator command through the fuselage and terminate at the respective aft quadrants located in the rear section of the fuselage. The aft quadrants each drive an output rod that is connected to two control rods in series. The first control rod is connected to a gain changer mechanism, which is a four bar linkage that provides a non-linear gearing between control column movement and elevator surface. The second rod is connected to a pitch feel simulator that provides artificial feel forces. Aft of the gain changer mechanism, a series of control rods, levers, and a torque tube transmit the elevator command to two elevator power control units per elevator.

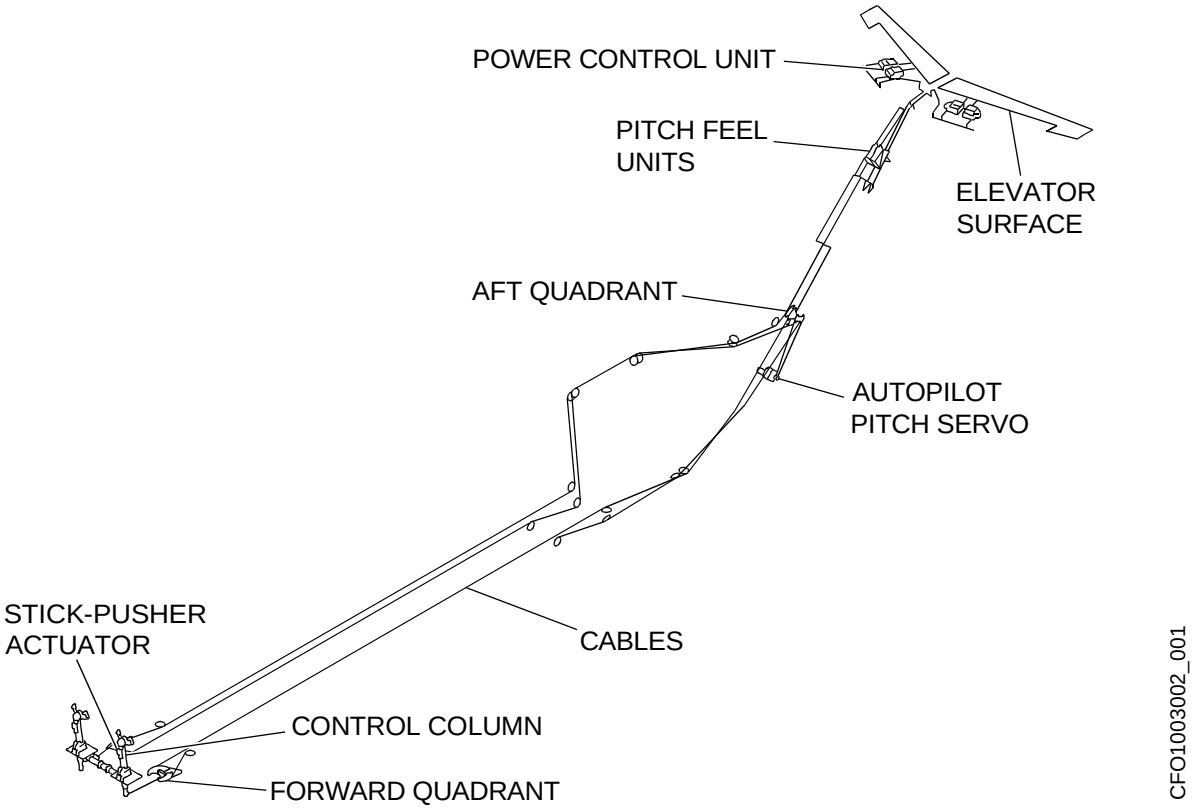

PRIMARY FLIGHT CONTROLS (Cont)

PITCH DISCONNECT

When pulled, the PITCH DISC handle isolates a jammed elevator control system. Pulling the handle, then turning 90° will allow the pilot or copilot to control the non-jammed elevator. A PITCH DISCONNECT (W) CAS message will also be illuminated on the MFD.

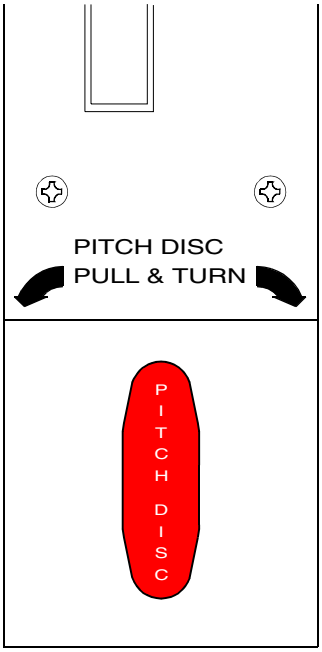

PITCH DISC LEVER

CFO1001002_015

PRIMARY FLIGHT CONTROLS (Cont)

ELEVATOR CONTROL SCHEMATIC

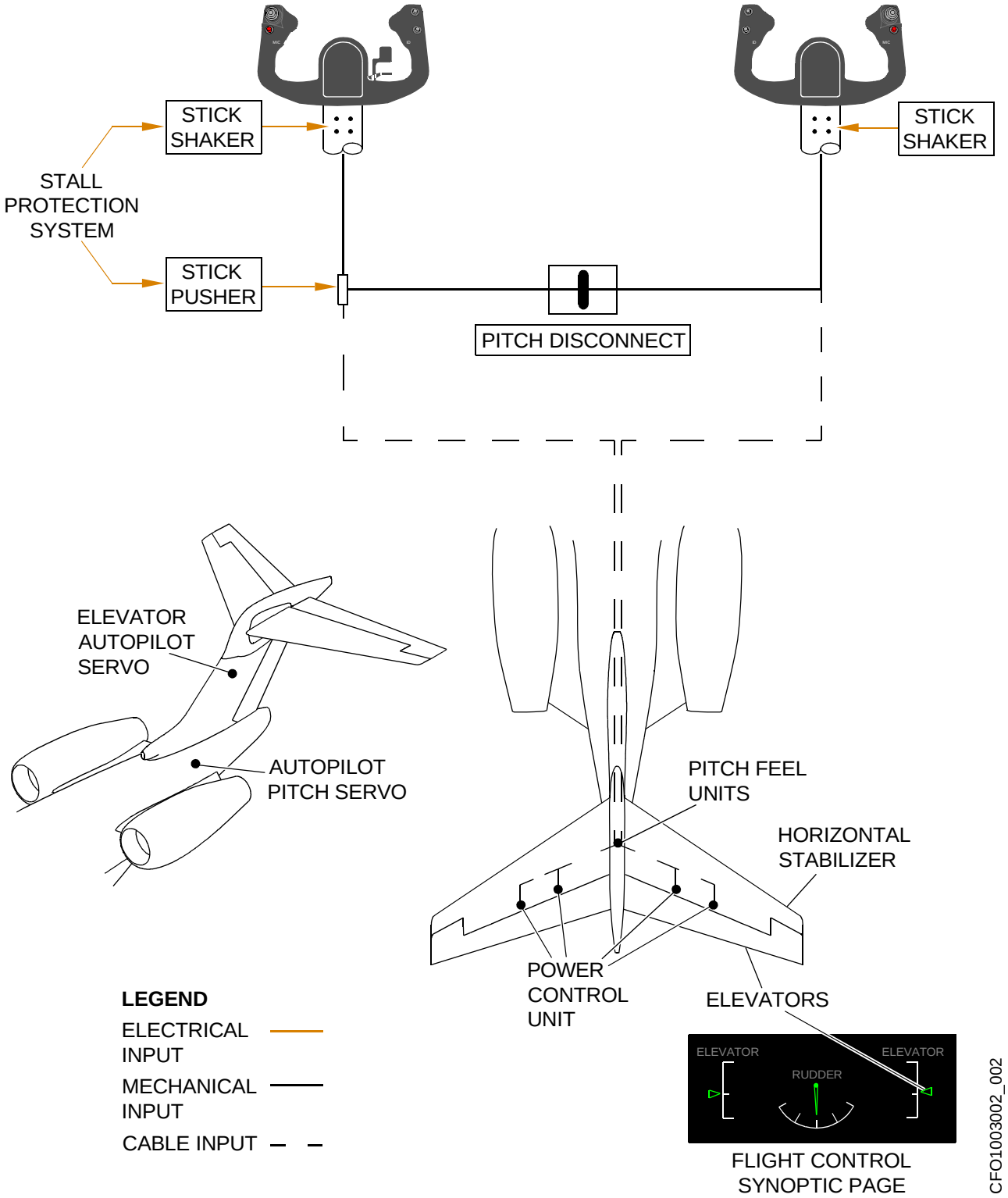

SECONDARY FLIGHT CONTROLS

DESCRIPTION

Secondary flight controls include flaps, multifunction spoilers, ground spoilers, aileron, rudder, and horizontal stabilizer trims. Flaps are electrically controlled and hydraulically actuated. Horizontal stabilizer, aileron, and rudder trims are electrically operated. The multifunction spoilers and ground spoilers are operated hydraulically but controlled via electrical signals generated by the SECU. Position indicators for the secondary control surfaces are located on the MFD and the FLIGHT CONTROLS synoptic page.

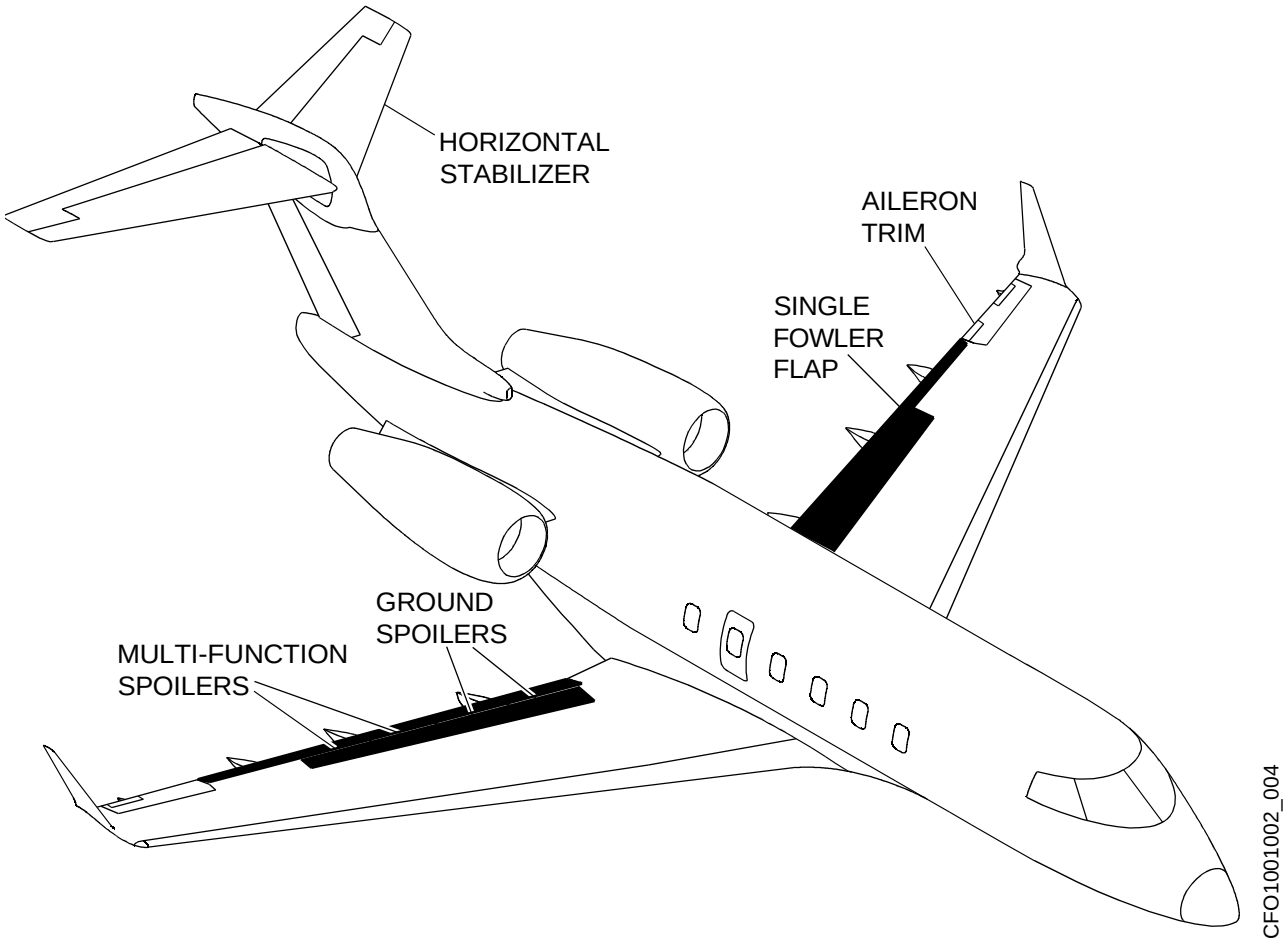

SECONDARY FLIGHT CONTROLS (Cont)

COMPONENTS AND OPERATION

AILERON TRIM

Aileron trim is achieved by means of an aileron trim tab located on the left aileron. The trim tab is moved by an electromechanical actuator located in the left aileron. The trim actuator is activated by movement of the aileron trim switches on the pilot and copilot's control wheels.

The aileron trim tab has ±20 degrees of travel with respect to the aileron surface. The aileron trim switches consist of a single unit containing a split-pole-four throw toggle button (left and right for aileron trim and up and down for horizontal stabilizer trim) and a single-pole single-throw push button to arm. To activate aileron trim, the button must be pressed down and simultaneously pushed left or right.

The CONFIG AILERON TRIM (W) CAS message illuminates if takeoff is attempted with the aileron trim not within the takeoff trim band.

RUDDER TRIM

Rudder trim is provided through an electromechanical rudder trim actuator. Rudder trim is activated by the flight crew by means of a RUD TRIM switch on the pedestal. Trimming of the rudder is done directly with the rudder surface. There are no trim tabs on the rudder. Activation of the RUD TRIM switch causes electrical inputs to the rudder power control units that move the rudder to the position selected by the pilot. A CONFIG RUDDER TRIM (W) CAS will also be illuminated if not properly configured for takeoff.

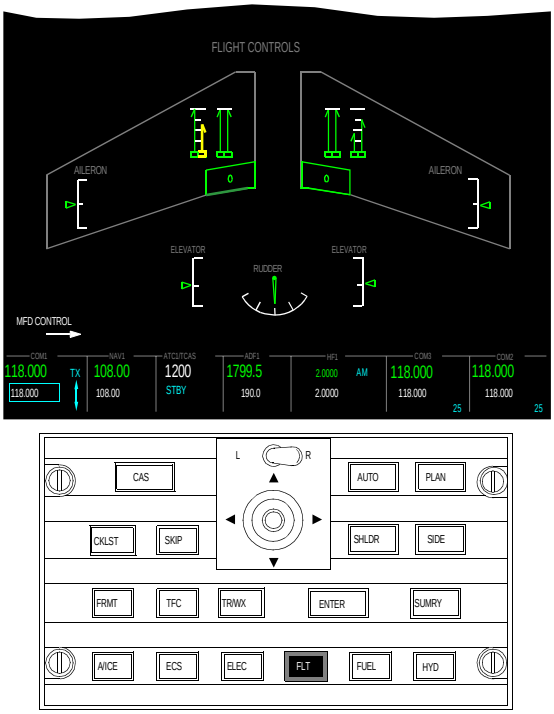

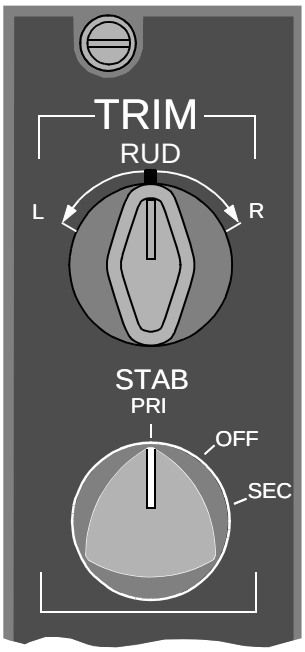

CFD1002002_006

HORIZONTAL STABILIZER TRIM

The stabilizer trim controls pitch trim by varying the horizontal stabilizers angle of incidence. The stabilizers are positioned by a jack screw driven by electric motors and controlled by the horizontal stabilizer trim control unit. Each trim motor has a brake to prevent trim runaway. The trim control unit receives inputs from the control wheel trim switches, the autopilot (AFCS), flaps (FCU) and Mach (ADC).

The stabilizer trim position indicator and readout is displayed on the EICAS and the FLIGHT CONTROLS synoptic page. The digital readout indicates the stabilizer position in units of trim, which corresponds to horizontal stabilizer angle of incidence. The stab trim range of movement is 0 to 15 degrees, with the normal takeoff range of 2.5 to 8.0 units (green).

A CONFIG STAB TRIM (W) CAS will be displayed if the stabilizer trim is not in normal takeoff range.

SECONDARY FLIGHT CONTROLS (Cont)

HORIZONTAL STABILIZER TRIM

The stabilizer trim can be moved manually by control wheel trim switches or automatically via computer-controlled inputs from the autopilot, spoilers, or flaps.

Manual trim rates differ, depending on which channel is engaged. When the primary channel is engaged, the trim rate is a function of airspeed (mach). When the pitch trim secondary channel is engaged, the trim rate is a constant 0.2 degrees per second.

The primary channel trim rate limit is 0.4 degrees/second at airspeeds up to Mach 0.4, decreasing linearly to 0.1 degrees/second at Mach 0.8, and 0.1 degrees/second above Mach 0.8. If Mach data is not available, the trim rate limit defaults to 0.2 degrees/second.

CONFIGURATION TRIM

The aircraft has configuration trim, which is automatic trim movement when the flaps are extended or retracted and the spoilers are extended or retracted. The aircraft has a nose down pitching moment with flap extension and nose up pitching moment with spoiler extension. When these control surfaces are deflected, the horizontal stabilizer trim moves so as to reduce the control column forces.

MACH TRIM

The Mach trim function makes allowances for the rearward shift of the aerodynamic center of pressure as the Mach number increases. Without correction, this shift in the center of pressure decreases longitudinal stability.

The horizontal stabilizer trim control unit automatically adjusts the stabilizer as a function of the Mach number when the autopilot is not engaged.

The Mach trim system, using Mach information from the air data computers (ADCs), varies the angle of incidence of the stabilizer by commanding movement of the horizontal stabilizer actuator.

When Mach trim is active, increasing speed from a trimmed condition results in Mach trim inputting slight nose up trim, increasing the aircraft's natural speed stability. Likewise, decreasing aircraft speed from a trimmed condition results in Mach trim inputting slight nose down trim.

The Mach trim system is continuously monitored and any fault detected is displayed on the EICAS display.

SECONDARY FLIGHT CONTROLS (Cont)

AILERON TRIM SCHEMATIC

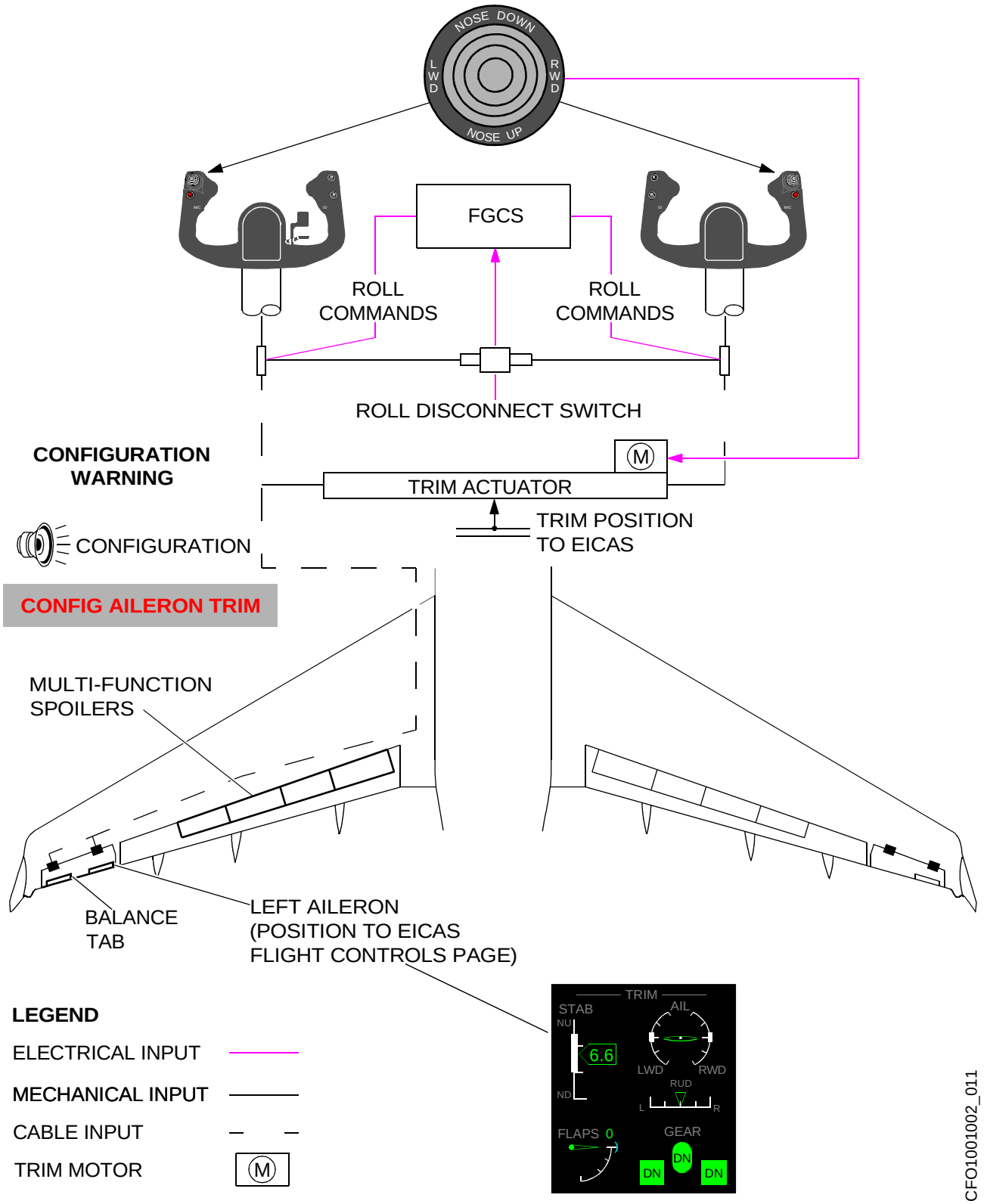

CFO1001002_011

SECONDARY FLIGHT CONTROLS (Cont)

HORIZONTAL STABILIZER TRIM SCHEMATIC

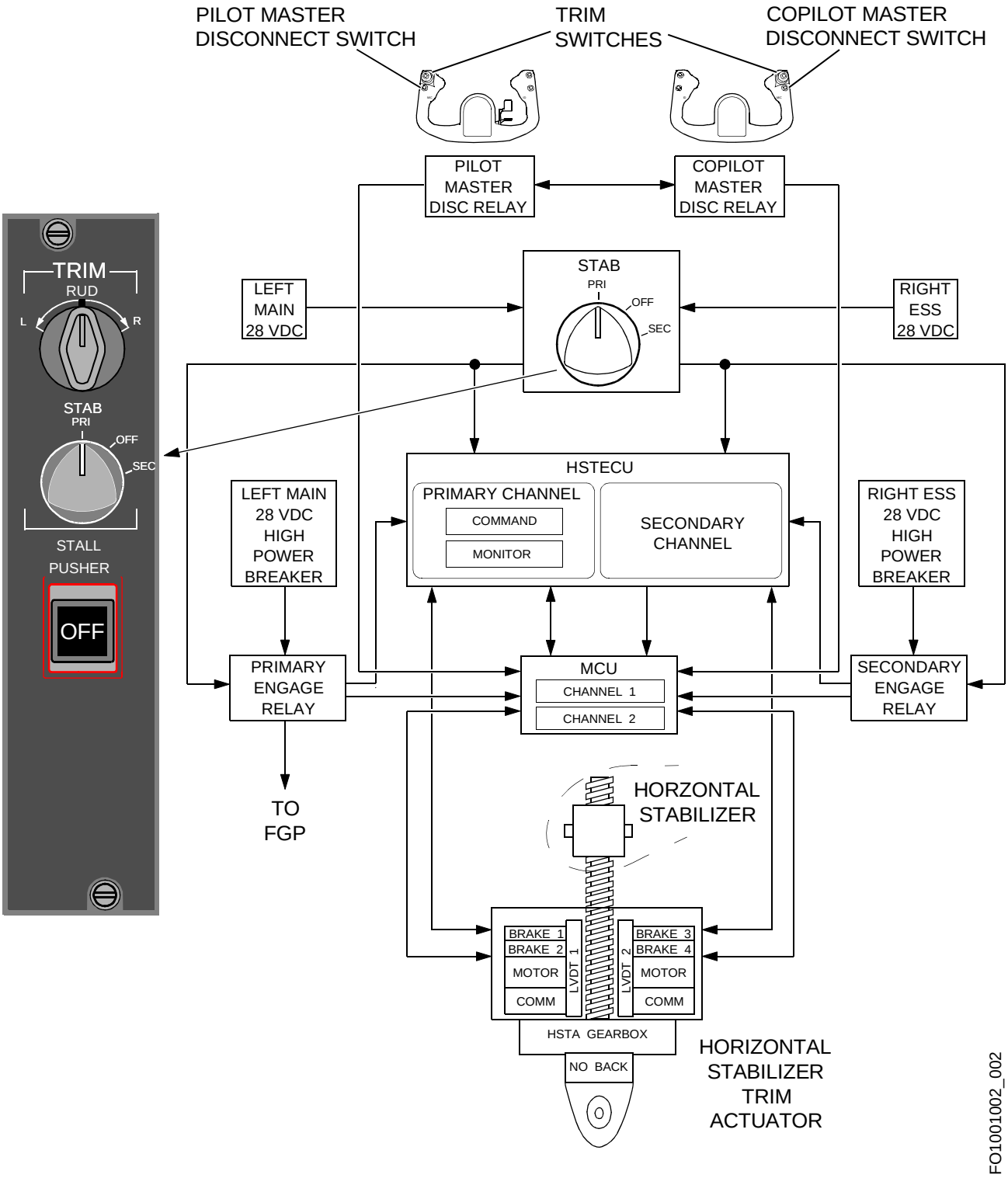

SECONDARY FLIGHT CONTROLS (Cont)

FLAPS

The single-slotted Fowler flaps are electronically controlled and operated by a hydraulic motor in the flap power unit. There are two hydraulic systems. Under normal conditions, the flaps will operate with the right hydraulic system. When ALTN FLAPS is selected ON, flaps will operate from the left hydraulic system and a FLAPS ALT PRESS lamp will illuminate in green on the EICAS. FLAPS RATE LOW (A) CAS will illuminate if the flap control unit is controlling the system at a lower than nominal speed in order to reduce the hydraulic flow. This is the case if either the pressure switches of the hydraulic system indicate that the engine driven pump for the main system is not working, or the alternate hydraulic supply is selected. Normal flap extension from 0 to 30 does not exceed 20 seconds with the right engine-driven hydraulic pumps operating. However, time extends up to 60-70 seconds while lowering flaps from 0 to 20 in flight when using ALTN FLAPS or when using the right DC hydraulic pump. Each flap panel, one on each wing, has three safe-life flap tracks and is driven by two screw jack actuators. A stainless steel shaft transfers power from the hydraulic motor to each flap actuator. The flap control lever is located on the center pedestal and is recessed to prevent inadvertent operation.

COMPONENTS AND OPERATION

The flap power unit (FPU) is located aft of the wing center section behind the wing attachment fitting and contains the hydraulic motor, servo control valve, arming solenoid valve and pressure switch. The servo valve responds to electrical signals from the flap control unit and meters hydraulic pressure to extend or retract the bidirectional hydraulic motor. The arming solenoid valve must be opened by the flap control unit before hydraulic pressure is available to the servo valve. The pressure switch monitors system pressure between the arming solenoid valve and servo valve. If hydraulic pressure is not available on flap selection, flaps are inoperative. If the FPU detects a fault, the flaps may deploy at a reduced speed when selected and FLAPS RATE LOW CAS will illuminate.

Stainless steel shafts routed along the rear wing spar transmit the rotary motion of the flap power unit to the input shaft of each of the flap actuators. Two rotary variable differential transformers (RVDTs) mounted on the outboard side of each outboard flap actuator provide position information to the flap control unit (FCU) and the flap position indicating unit. The flap actuators incorporate a screw jack and are attached to the rear spar. These actuators convert the rotary input motion into linear output motion through these screw jacks, driving the flaps. Each actuator has overtravel end stops. The screw jack design of the flap actuators prevents uncommanded retraction due to airloads or vibration.

The flap control unit (FCU) performs the following functions:

- Controls flap panel movement according to pilot commands
- Monitors critical system conditions (runaway/uncommanded movement, surface asymmetry, system jam, overspeed and speed differential)
- Switches the system to fail safe condition after detection of a critical failure
- Monitors FPU for internal and external hydraulic leakage and provide annunciation to the aircrew
- Flap position to the stall protection system
- Provides data for cockpit indication and for maintenance purposes

In addition to control and monitoring, the FCU also contains the left hand and right hand flap position indication unit (FPIU) and provides flap panel position to the EICAS

FLAP ALERTING

The flap position alerting system is monitored by airspeed, flap position, spoiler, gear position, and altitude. An overspeed warning horn is activated if flaps are extended above the following speed:

- V_{FE} 210 kt — 10°
- V_{FE} 210 kt — 20°
- V_{FE} 175 kt — 30°

SECONDARY FLIGHT CONTROLS (Cont)

FLAP CONTROL LEVER

The FLAP control lever operates in one of four positions, (0, 10, 20, and 30) with detents at the 10 and 20 positions.To prevent inadvertent retraction of flaps from 30 to 0 in one motion during a go-around maneuver, a gate is located at the 10 position and must be pulled up slightly when retracting the flaps to 0. The lever is attached to dual RVDTs co-located with a flap lever detent switch below the flap handle. These dual RVDTs transmit the selected position to a flap control unit. Moving the lever between positions actuates the flap lever detent switch and energizes a 75-second timing circuit within the flap control unit. This circuit allows the arming solenoid valve within the flap power unit to energize open for 75 seconds and then de-energize.

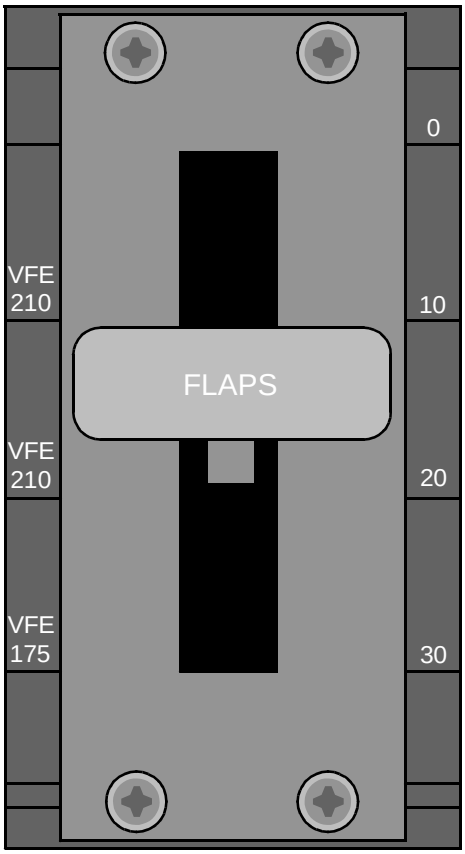

CFO1005002_007

FLAP POSITION INDICATION

Flap position is shown in a digital display on the (EICAS) and flight control synoptic page.

SECONDARY FLIGHT CONTROLS (Cont)

SPOILER SYSTEM

On the upper surface of each wing there are four spoiler panels. The two inboard panels are the ground spoilers, and the two outboard panels are the multifunction spoilers.

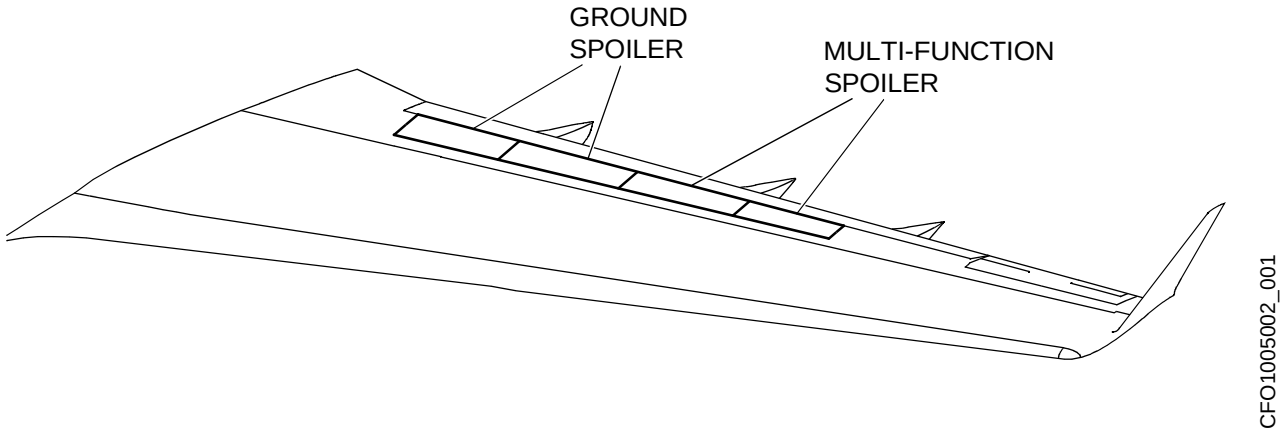

The system is computer controlled and hydraulically operated, two ground spoilers provide ground lift dumping functions. The multifunction spoilers provide roll assist, proportional lift dumping and ground lift dumping functions.

The ground spoilers have only two positions: fully retracted during flight or fully deployed after landing. The inboard and outboard ground spoilers, when tied together with the multifunction spoilers, comprise the ground spoilers system.

SECONDARY FLIGHT CONTROLS (Cont)

COMPONENTS AND OPERATION

SPOILER ELECTRONIC CONTROL UNIT (SECU)

Two electronic units, SECU 1 and SECU 2, control the spoilers. The SECUs contain all the functions necessary to transmit the spoiler sensor outputs and control the spoiler actuators. The SECUs also supply crew-alerting system messages, maintenance messages, and flight-data recorder data.

FLIGHT SPOILERS LEVER

The flight spoilers lever provides symmetric deployment of two pairs of multifunction spoilers via the SECU. In normal operation there are nine detented positions between 0 and MAX. The 0 position is gated and requires pressing the push button on top of the lever to release. The 0 position can be reselected without pushing the button. A tenth position for emergency descent is also available. The EMER position is gated and requires pressing the push button to engage. The lever will return anywhere within the 0 to MAX position from EMER without pressing the button.

The spoiler graphic display on the top half of the left MFD declutters after 60 seconds when the spoilers are retracted. The graphic will automatically be displayed again when the ground or flight spoilers are extended or a spoiler failure exists.

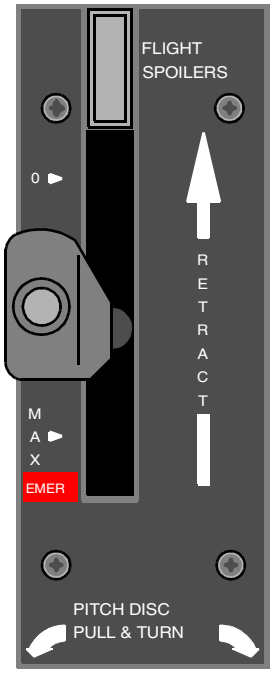

CFO1005002_002

SECONDARY FLIGHT CONTROLS (Cont)

ROLL SPOILERS

Roll spoilers assist is provided through the multifunction spoilers (MFSs) to assist the ailerons in providing roll control. Each panel is electronically controlled by the SECU, and operated by a single hydraulically actuated power control unit (PCU). Pilot inputs to the roll assist system are through the control wheels, and the ROLL SPOILERS switch located on the center pedestal

ROLL SPOILERS DISCONNECT

If the aileron cable system jams, the pilot must activate the roll disconnect feature on the pilot's control wheel. This action disconnects the pilot's wheel from the cable system, permitting continued roll assist by the pilot if the jam is not in the pilot's wheel.

The ROLL SPOILERS switch is located on the center pedestal. If the jam is in the pilot's wheel, raising the guarded switch and pressing OFF disables the roll assist function. A ROLL SPOILERS OFF (C) will be illuminated on the EICAS. A ROLL SPOILERS OFF (S) is illuminated when the roll spoilers have been turned off and the roll disconnect has been activated. Pressing the switch again, reengages the roll assist function and extinguishes the CAS message

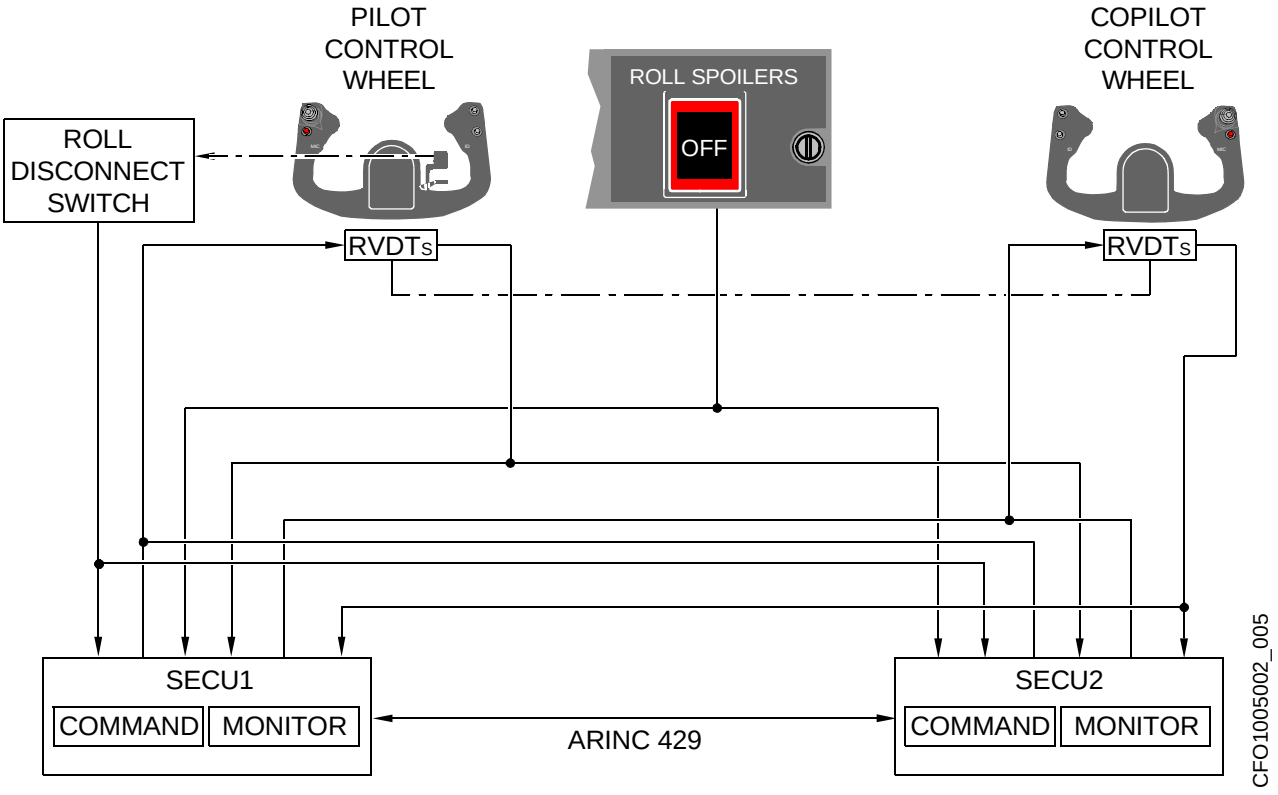

SECONDARY FLIGHT CONTROLS (Cont)

FLIGHT SPOILER SCHEMATIC

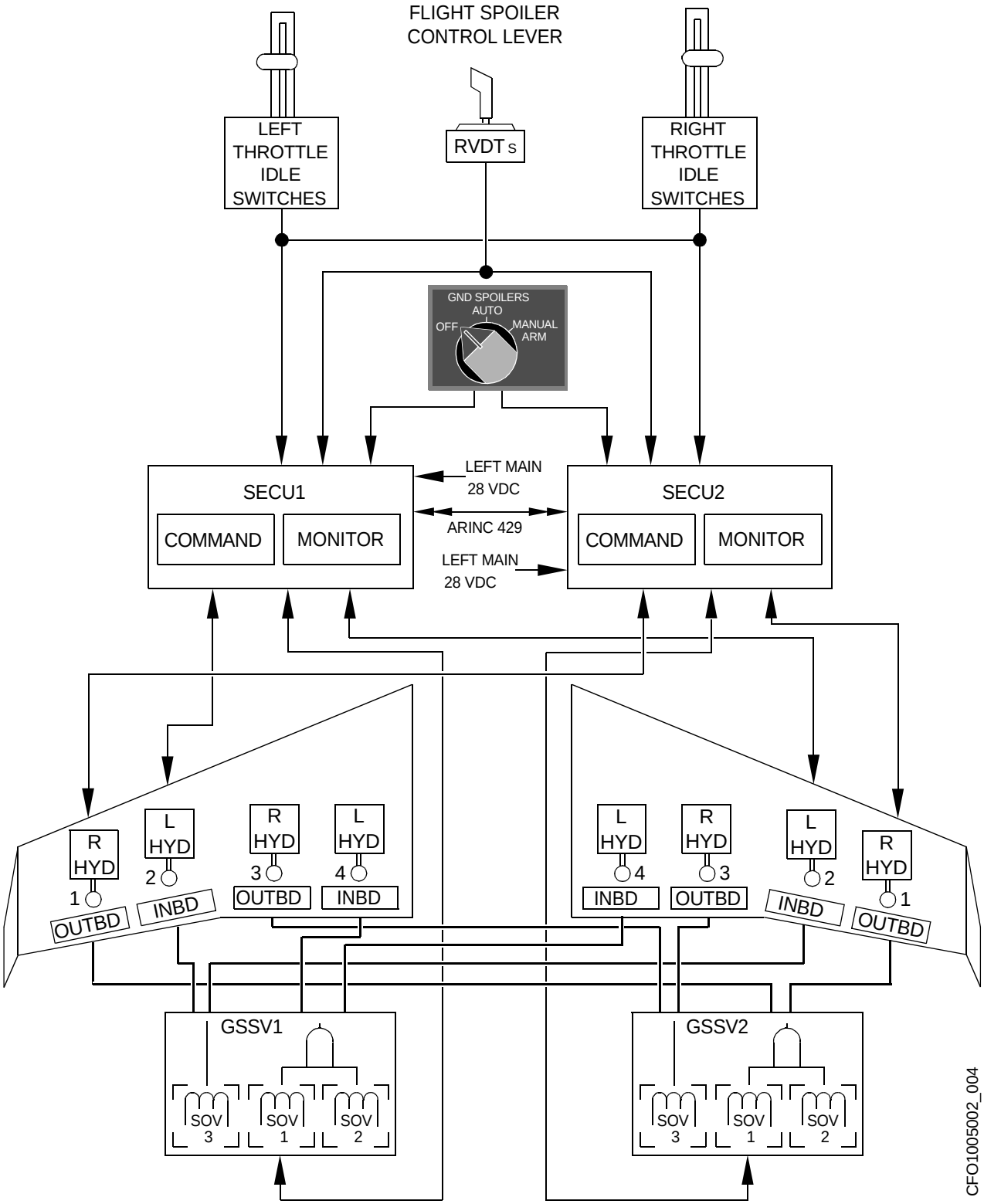

SECONDARY FLIGHT CONTROLS (Cont)

GROUND SPOILERS

DESCRIPTION

After touchdown or during a rejected takeoff, the inboard and outboard ground spoilers in conjunction with the multifunction spoilers are extended to spoil lift and increase drag to assist in aircraft braking. The ground spoilers function is normally automatic but can be activated manually by the pilot. The ground spoilers have no in-flight function.

COMPONENTS AND OPERATION

The ground spoiler function is selected by the three position GND SPOILERS switch as follows:

- OFF — Disables the ground spoilers by disarming the function
- AUTO — Automatically arms the ground spoilers for landing and rejected takeoff in conjunction with throttle lever angle, wheel speed, weight on wheels and radio altitude
- MANUAL ARM — Arms the ground spoilers regardless of the inputs required to arm in the AUTO position

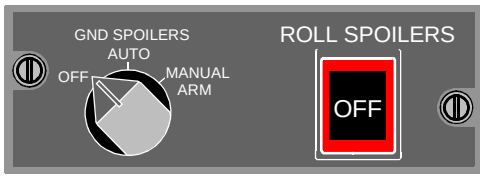

CFO1005002_006

When deployed, the ground spoiler panels extend to 60° and the multifunctional panels extend to 45°, however, only the multifunction panels respond to control wheel roll assist inputs. Ground spoilers deploy when the inputs for ground spoiler deploy logic are throttles at IDLE, and 2 of the 3 following criteria are met: radio altitude less than 7 ft, weight on wheels, and wheelspeed greater than 16 kt.

The position of all panels are shown on the EICAS FLIGHT CONTROLS synoptic page. Green arrows and position scales indicate relative deflection of the surfaces.

Inboard and outboard ground spoilers are limited to two positions, either up or down. The spoilers are continuously monitored and any fault detected is displayed on the appropriate EICAS screen.

SECONDARY FLIGHT CONTROLS (Cont)

TAKEOFF CONFIGURATION WARNING SYSTEM

DESCRIPTION

The takeoff configuration warning system monitors the position of the flaps, flight spoilers, parking brake, autopilot, aileron, rudder, roll and pitch disconnect, and horizontal stabilizer trims, to ensure that they are in a safe configuration for takeoff.

COMPONENTS AND OPERATION

The warning system is armed when the airplane is on the ground. If one or more of the monitored systems is in an unsafe takeoff configuration and both throttles are at or above the climb (CLB) detent, the master warning lights flash, aural alerts sound and warning messages are presented. The configuration warning indications are canceled by correctly positioning the applicable control or retarding the thrust levers.

PROXIMITY SENSING SYSTEM

DESCRIPTION

The proximity sensing system (PSS) consists of the proximity sensing electronic unit (PSEU), proximity sensors and proximity switches. The proximity sensing system monitors aircraft systems for correct operation and configuration.

COMPONENTS AND OPERATION

PROXIMITY SENSING ELECTRONIC UNIT

The proximity sensing electronic unit (PSEU) processes information received from landing gear position, WOW position, thrust reverser position and fuselage door position and provides instructions to other aircraft systems.

Proximity switches and sensors measure the physical relationship between two aircraft components. If the components are close together, the sensors and/or switches provide a “near” signal. If the components are separated, a “far” signal is generated. The PSS uses this information to generate appropriate signals for use by other aircraft subsystems.

The PSEU receives inputs from sensors and controls the takeoff configuration warning system.

Failure of the proximity sensing system is indicated on the EICAS.

STALL PROTECTION SYSTEM

DESCRIPTION

The stall protection system (SPS) provides the flight crew with aural, visual, and tactile (stick shaker) indications of an impending stall. If the pilot does not take corrective action, the system activates the stick pusher mechanism.

COMPONENTS AND OPERATION

There is a stick shaker on each control column and a single stick pusher mechanism attached to the left pitch control system.

A dual-channel stall protection system (SPS) computer monitors the following inputs:

- Angle of attack - L, R Angle-of-Attack (AOA) transducers (vanes)
- Lateral acceleration - Attitude Heading Reference Systems (AHRS)
- Flap position
- Weight-on-wheels - WOW 1 and WOW 2
- Mach and airspeed - ADC 1, ADC 2, and standby instrument

STALL PROTECTION SYSTEM (Cont)

The ADCs supply primary Mach data to the SPS computer for Mach compensation of the aircraft's stall margin.

The SPS uses the above inputs to calculate the angle-of-attack trip points. The stick shaker activation and ignition activation are simultaneous.

In the event of an AOA increase rate greater than 1 degree per second, the stall protection computer lowers the activation trip point. This prevents the aircraft's pitching momentum from carrying it through the stall warning/stick pusher sequence to deep into the stall.

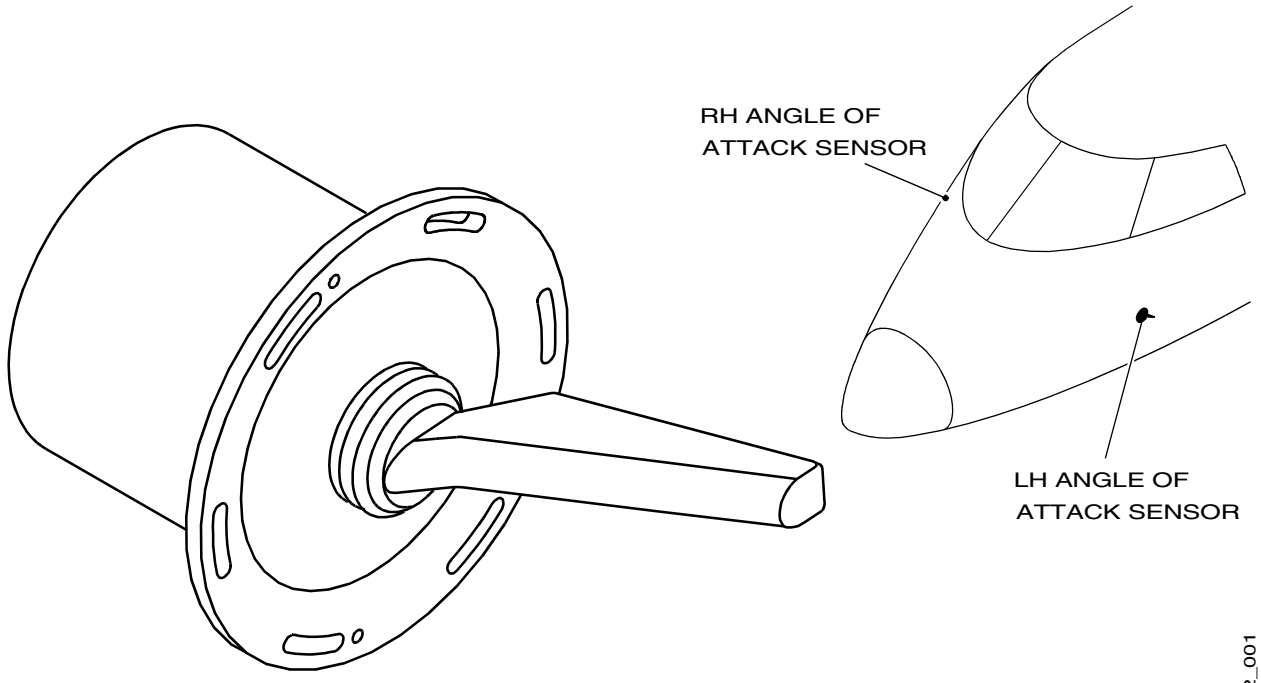

ANGLE OF ATTACK SENSOR (TYPICAL)

CFO1006002_001

STALL PROTECTION SYSTEM (Cont)

STICK PUSHER DISCONNECT FEATURES

The stick pusher can be stopped by pressing and holding either control wheel master disconnect switch (MSW). The stick pusher is capable of operating immediately when the MSW switch is released. This function is inoperable on JAA approved aircraft.

Should the SPS incorrectly activate the stick pusher, the stick pusher may be disabled by selecting the STALL PUSHER switch to OFF.

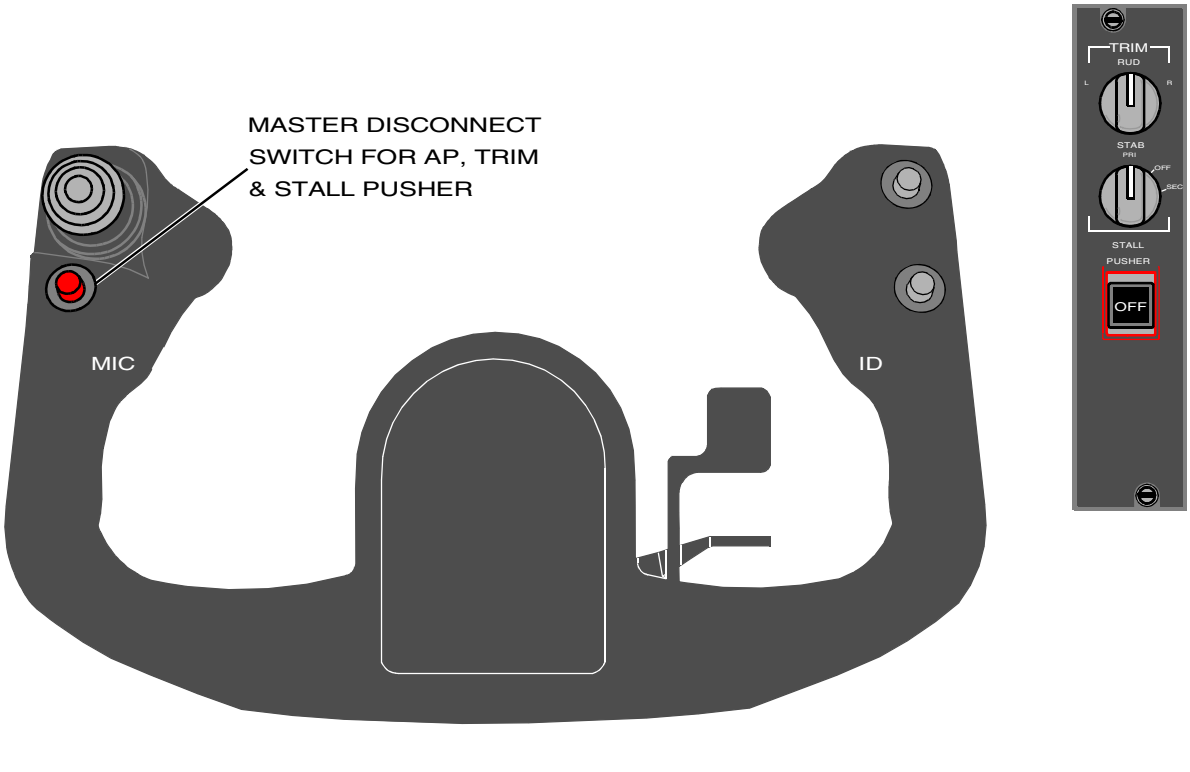

CONTROLS AND INDICATIONS

FLAP CONTROL LEVER

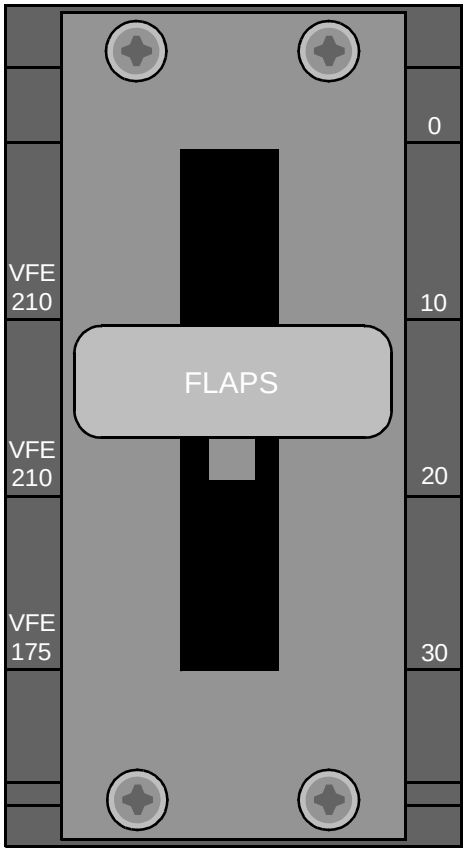

CFO1005002_007

EICAS TRIM STATUS DISPLAY

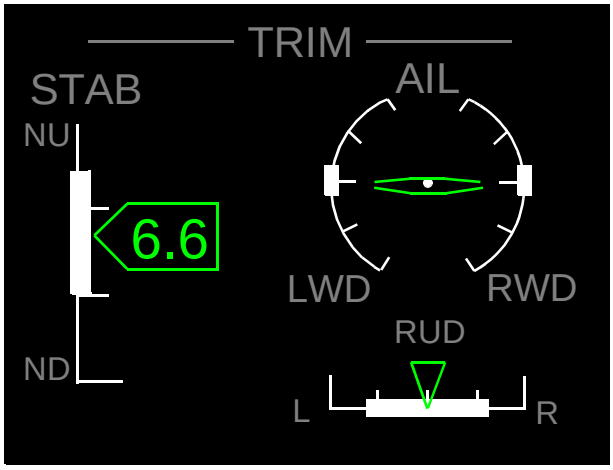

CFO1001002_010

CONTROLS AND INDICATIONS (Cont)

FLIGHT CONTROL SYNOPTIC PAGE

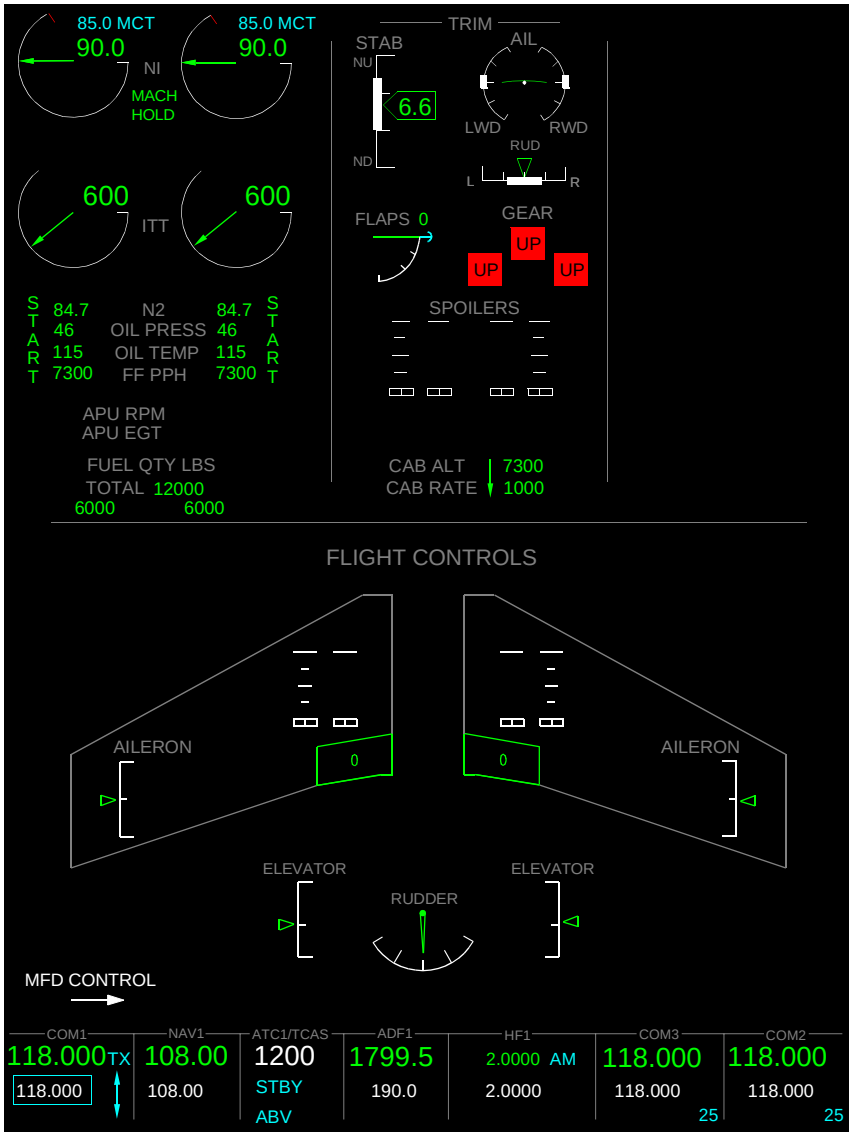

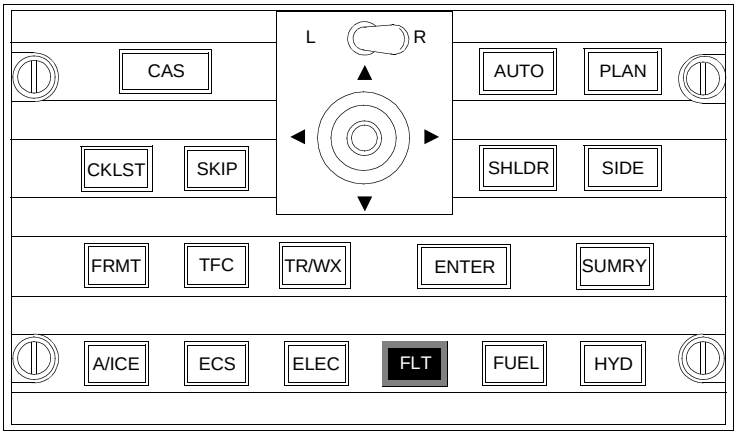

CFO0305002_012

EICAS MESSAGES

The flight controls messages are shown on the EICAS. The flight control messages, inhibits and aural alerts are listed below. A brief explanation of each message is provided.

MESSAGE	INHIBITS	MEANING	AURAL WARNING
CONFIG AILERON TRIM		Aileron trim is not in the takeoff range (green band)	“Configuration”
CONFIG AUTOPILOT		Autopilot not configured for takeoff	“Configuration”
CONFIG FLAPS		Flaps not in takeoff position	“Configuration”
CONFIG RUDDER TRIM		Rudder trim is not in the takeoff range (green band)	“Configuration”
CONFIG SPOILERS		Spoilers is not in takeoff position	“Configuration”
CONFIG STAB TRIM		Elevator trim is not in the takeoff range (green band)	“Configuration”
PARK/EMER BRAKE ON		Emergency brake is engaged with throttles at or above climb. The CAS will be accompanied by the “CONFIGURATION” voice warning.	“Configuration”
PITCH DISCONNECT		Pitch disconnect has occurred on the ground with throttles at or above CLB	
ROLL DISCONNECT		Roll disconnect has occurred on the ground with throttles at or above CLB	
ELEVATOR SPLIT		The elevator has a split of greater than 7.5°. The split may be caused by maneuvering with the elevator disconnected	
FLAPS FAIL	TO	The flap system has shutdown due to a failure. The flaps are not resettable	
FLAPS FAULT	TO	The flaps are operating in a degraded mode. The fault may be resettable in some conditions, by movement of the flap selector handle	
FLAPS NORM PRESS LOW	TO/LAND	The flaps normal hydraulic pressure is low. This will be accompanied by a FLAPS FAULT CAS. Alternate pressure may be available	
FLT SPOILERS DEPLOY		The flight spoilers are deployed below 500 feet (FAA), {800 ft JAA} or the flight spoilers are deployed and the throttles are at CLB or above	
FLT SPOILERS FAIL		All flight spoilers have failed	
FLT SPOILERS FAULT	TO	Either the inboard or outboard spoilers have failed	
GND SPLRS NOT ARMED		The ground spoilers are not armed and not selected OFF	

EICAS MESSAGES (Cont)

MESSAGE	INHIBITS	MEANING	AURAL WARNING
GND SPOILERS FAIL		The ground spoilers have failed	
MACH TRIM FAIL	TO/LAND	The Mach trim has failed	
PRI STAB TRIM FAIL		The stabilizer trim has failed. Mach trim, flap and spoiler config trim inoperative	
ROLL SPOILERS FAIL		Roll assist function has failed but flight and ground spoilers have not. Roll control forces will be higher	
ROLL SPOILERS FAULT		Either the inboard or outboard roll spoilers have failed. Roll control forces will be higher	
ROLL SPOILERS OFF		The roll spoilers have been turned off with the ROLL DISC not activated	
RUDDER LIMITER FAIL		The rudder limiter has failed	
SEC STAB TRIM FAIL		The secondary stabilizer trim has failed. This message should not be displayed unless the primary stabilizer trim has already failed	
SPOILERS FAIL		The spoilers have failed. If the spoilers were deployed, they will retract down to a float position. The spoilers will not float up.	
SPOILERS FAULT		One or more of the spoiler panels have failed or one or more of the ground spoilers is up prior to touchdown	
STALL PROTECT FAIL		The stall protection has a failure in either channel A or B, or the pusher or AOA sensor has failed, or a miscompare has been detected between essential inputs or essential inputs are unavailable	
STALL PUSHER OFF		The control wheel master switch button has been depressed for at least ten seconds or a stall protection system failure has occurred that has inhibited operation of the stall pusher	
FLAPS FAULT	TO	There is a fault in the flap system. The flaps should operate normally	
FLAPS RATE LOW	TO/LAND	The flap extension and retraction rates are slower than normal. This message will illuminate when the right engine is shutdown, or if the engine driven pump is shutdown	

EICAS MESSAGES (Cont)

MESSAGE	INHIBITS	MEANING	AURAL WARNING
RUDDER LIMITER FAULT	TO/LAND	A minor failure resulting in the loss of redundancy has occurred in the rudder limiter system The rudder travel limiter will continue to function	
SPOILERS FAULT	TO/LAND	There is a fault in the spoiler system that does not affect spoiler operation. Selecting the roll disconnect on the ground and moving the control wheel(s) separately will result in a SPOILERS FAULT message. If this occurs, removing all power from the aircraft and re-powering will cause the message to clear	
STAB TRIM FAULT	TO/LAND	A minor failure has occurred causing a loss of redundancy in the horizontal stabilizer trim system. The stabilizer trim will continue to function	
STALL PROTECT FAULT	TO/LAND	The Stall Protection Computer has automatically reverted to settings for flaps 30	
L (R) STALL SHAKER FAIL	TO/LAND	The respective stall shaker has failed	
GND SPOILERS OFF		The ground spoilers are selected OFF	
PITCH DISCONNECT		The pitch disconnect has been selected. The pilots control column moves the left elevator. The copilot's control column moves the right elevator. Autopilot will disengage and not re-engage	
ROLL DISCONNECT		The roll disconnect has been selected. The pilot's control wheel moves the aileron. The autopilot will disengage and not re-engage	
ROLL SPOILERS OFF		The roll spoilers have been turned off and the roll disconnect has been activated	
RUD LIMITER IN TEST		The rudder travel limiter system is conducting the manually activated system test	
SEC STAB TRIM ON		The secondary channel of the horizontal stabilizer trim system is selected. The autopilot will be inoperative	
STAB TRIM OFF		The STAB TRIM switch is in the off position. The autopilot will be inoperative	
STALL PUSHER OFF		The stall pusher has been manually deactivated	

Table of Contents

Introduction 11-01-01
Primary Flight Displays 11-01-03
Description 11-01-03
Components and Operations 11-01-04
Attitude Display 11-01-04
Aircraft Symbol 11-01-04
Horizon Line 11-01-04
Sky/Ground Display 11-01-04
Pitch Tape and Chevrons 11-01-04
Roll Scale and Pointer 11-01-05
Slip/Skid Indicator 11-01-05
Vertical Deviation Display 11-01-05
Glideslope Flag 11-01-05
Declutter 11-01-06
Altitude 11-01-08
Altitude Display 11-01-08
Vertical Navigation 11-01-09
Vertical Speed Field 11-01-09
Radio Altitude Display 11-01-10
RA MIN 11-01-10
BARO MIN 11-01-10
Air Data Flags 11-01-10
Air Data System 11-01-11
Description 11-01-11
Components and Operation 11-01-11
Airspeed Display 11-01-11
Reference Speeds 11-01-11
Low/Overspeed/Flap Speed Cues 11-01-11
Trend Vector 11-01-11
Altimeter Barometer Knob 11-01-12
Air Data Reversion Switch 11-01-12
Air Data Computers 11-01-12
Pitot Static System 11-01-13
Total Air Temperature Probe 11-01-14
Attitude and Heading Reference System (AHRS) 11-01-15
Introduction 11-01-15
Components and Operation 11-01-16
AHRS Computers 11-01-16
Magnetic Flux Detectors 11-01-16
Compass Control and Slew Switches 11-01-16
ATT/HDG Reversion Switch 11-01-16
Ground Alignment 11-01-17
Flight Alignment 11-01-17
Heading Display 11-01-18
Description 11-01-18
Components and Operation 11-01-18
Heading Indicators 11-01-18
Selected Heading Reference 11-01-18
Attitude and Heading Flags 11-01-18

Table of Contents (Cont)

Navigation Displays 11-01-19
Description 11-01-19
Components and Operation 11-01-19
Navigation Data 11-01-19
Navigation Source Indicator 11-01-19
Course Display 11-01-19
Course Pointer 11-01-19
Lateral Deviation Bar 11-01-19
Track Pointer 11-01-19
Bearing Pointers 11-01-20
Distance Display 11-01-20
Station Identifier 11-01-20
Navigation Alert Flags 11-01-20
Horizontal Situation Indicator (HSI) 11-01-20
Lateral Deviation Scale 11-01-21
To/From Indicator 11-01-21
Auto Flight Control System Display 11-01-21
Autopilot Indication 11-01-21
Flight Guidance Mode 11-01-21
1/2 Bank Indicator 11-01-21
Flight Director Warning Flag 11-01-21
Flight Director Command Bars 11-01-21
Multifunction Displays 11-01-22
Description 11-01-22
Components and Operation 11-01-23
MFD Control Panel 11-01-23
MFD Control Panel 11-01-24
3D Map Display (Optional) 11-01-27
Display Control Panel (DCP) 11-01-28
Description 11-01-28
Components and Operation 11-01-28
Display Control Panel Warning Flag 11-01-29
Reversion Switch Panel 11-01-30
Description 11-01-30
Components and Operation 11-01-30
Left Displays 11-01-30
EICAS (Optional) 11-01-31
Right Displays 11-01-31
Attitude/Heading 11-01-31
Air Data 11-01-31
Tune 11-01-32
Standby Instrument 11-01-32
Description 11-01-32
Components and Operation 11-01-32
Standby Instruments 11-01-32
Aligning Flag 11-01-32
Standby Instrument Functions 11-01-33
Clock/Chronometer 11-01-33
Description 11-01-33
Components and Operation 11-01-33
Flight Time (FLT/RST) 11-01-33
Chronograph (CHR) 11-01-33
GPS/MAN Mode 11-01-33

Table of Contents (Cont)

Standby Compass 11-01-34
Description 11-01-34
Components and Operation 11-01-34
Compass Correction Card 11-01-34
Controls and Indications 11-01-36
Primary Flight Display (PFD) 11-01-36
Multifunction Displays (MFD) 11-01-37
MFD Control Panel (MCP) 11-01-38
Display Control Panel (DCP) 11-01-38
Reversion Switch Panel 11-01-39
Standby Instrument 11-01-39
Multi-Function/Primary Flight Display Visual Annunciations 11-01-40
EICAS Messages 11-01-41
Introduction 11-02-01
Integrated Flight Information System (IFIS) Block Diagram 11-02-01
Electronic Charts (Optional) 11-02-02
MFD E-Charts 11-02-02
Chart Main Index 11-02-04
Chart Type Menu 11-02-07
Chart List 11-02-08
Chart NOTAMS Menu Display 11-02-10
Graphical Weather (Optional) 11-02-12
Graphical Weather (GWX-5000) 11-02-12
GWX Image List 11-02-13
NEXRAD Image 11-02-15
Tops/Movement Image 11-02-16
WX Depiction Image 11-02-17
Winds/Temps Image 11-02-18
Turbulence Image 11-02-19
Icing Image 11-02-20
Graphical Weather (GWX-3000) 11-02-21
TAF/METAR Reports 11-02-22
Graphical Weather Menu 11-02-22
METAR Reports Page 11-02-24
TAF Reports Page 11-02-25
SIGMET/AIRMETS Reports 11-02-26
SIGMET/AIRMET Reports Page 11-02-26
Overlays 11-02-27
GWX Overlays Menu 11-02-27
Overlay Legends 11-02-28
METAR Overlay 11-02-29
Airport IDENTS Overlay 11-02-30
SIGMET Overlay 11-02-31
Database Functions 11-02-32
Status Page 11-02-32
Database Effectivity Page 11-02-33
Chart Subscription Page 11-02-34
File Server Configuration page 11-02-35

INTRODUCTION

The Challenger 300 is equipped with an electronic flight instrumentation system (EFIS). The EFIS consists of four adaptive flight displays (AFD), grouped as a left primary flight display (PFD) and multifunction display (MFD) and a right MFD and right PFD. The control portion of the system is made up of two display control panels (DCP), one MFD control panel (two optional) , and one reversion switch panel (RSP). A DCP on the pilot and copilot side provides configuration and selection controls for the appropriate PFD, as well as radio controls for the MFD. The reversion panel provides the means for selecting a compressed PFD format on either AFD, as well as selecting reversion to cross-side attitude/heading data, air data, and radio tune control.

The adaptive flight displays provide airspeed, altitude, attitude, heading, navigation, and system information. Each pilot is presented with this information on a primary flight display (PFD) and a multifunction display (MFD).

A major interface with the EFIS is the integrated avionics processor system (IAPS), data concentrator units (DCU) and the remote data concentrators (RDC). The IAPS is the focal point of information flow for the entire aircraft. In addition to performing the integration function required to connect the various aircraft systems, the IAPS contains flight guidance computer, flight management computer (FMC), and maintenance diagnostic computer (MDC) modules. Other systems provide information to the EFIS for display as conventional flight instruments. This includes the air data system and the attitude and heading reference system.

Control for the EFIS display modes are provided by switches and push buttons located on the glareshield, the center console and the side instrument panels.

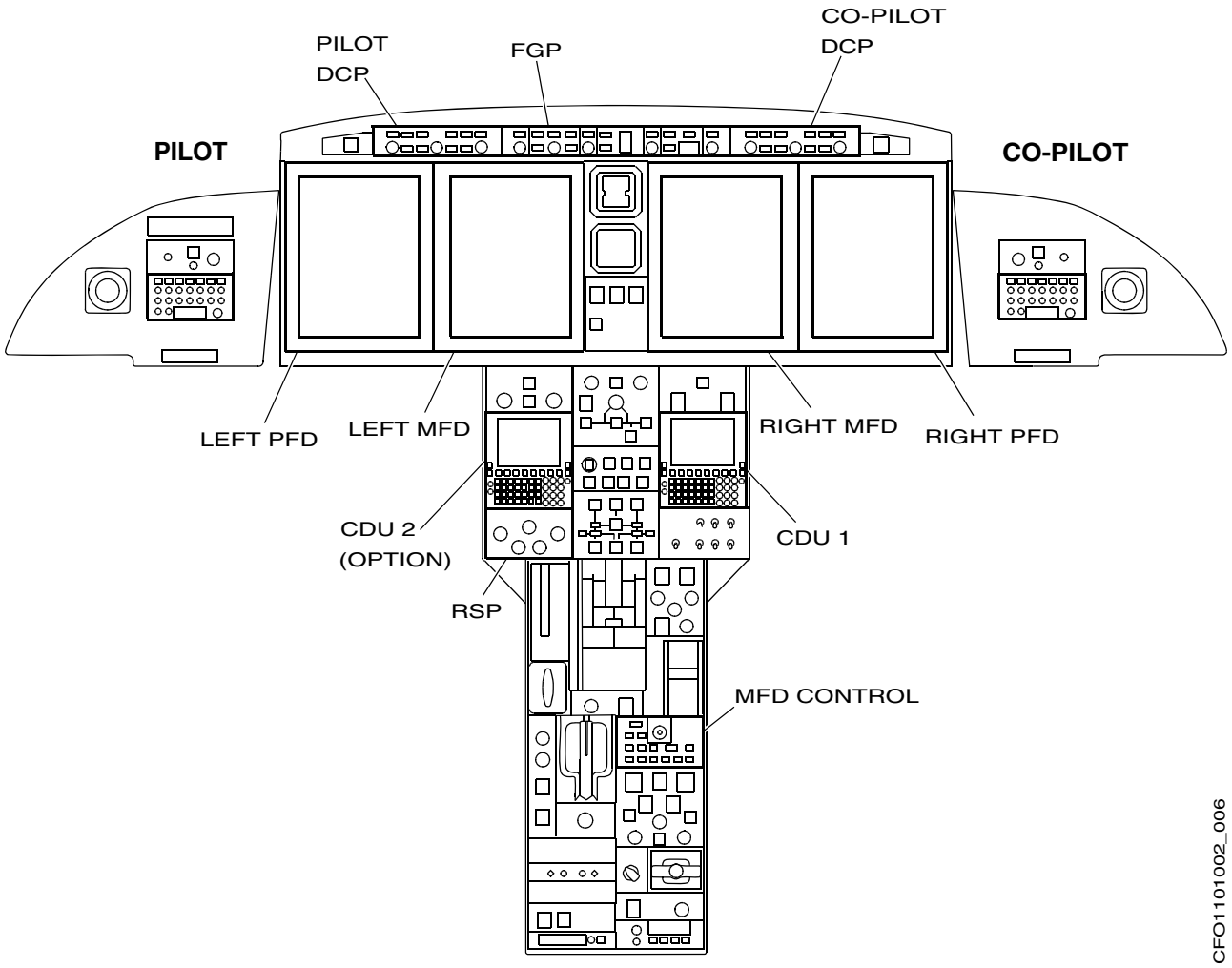

(EFIS Display typical)

INTRODUCTION (Cont)

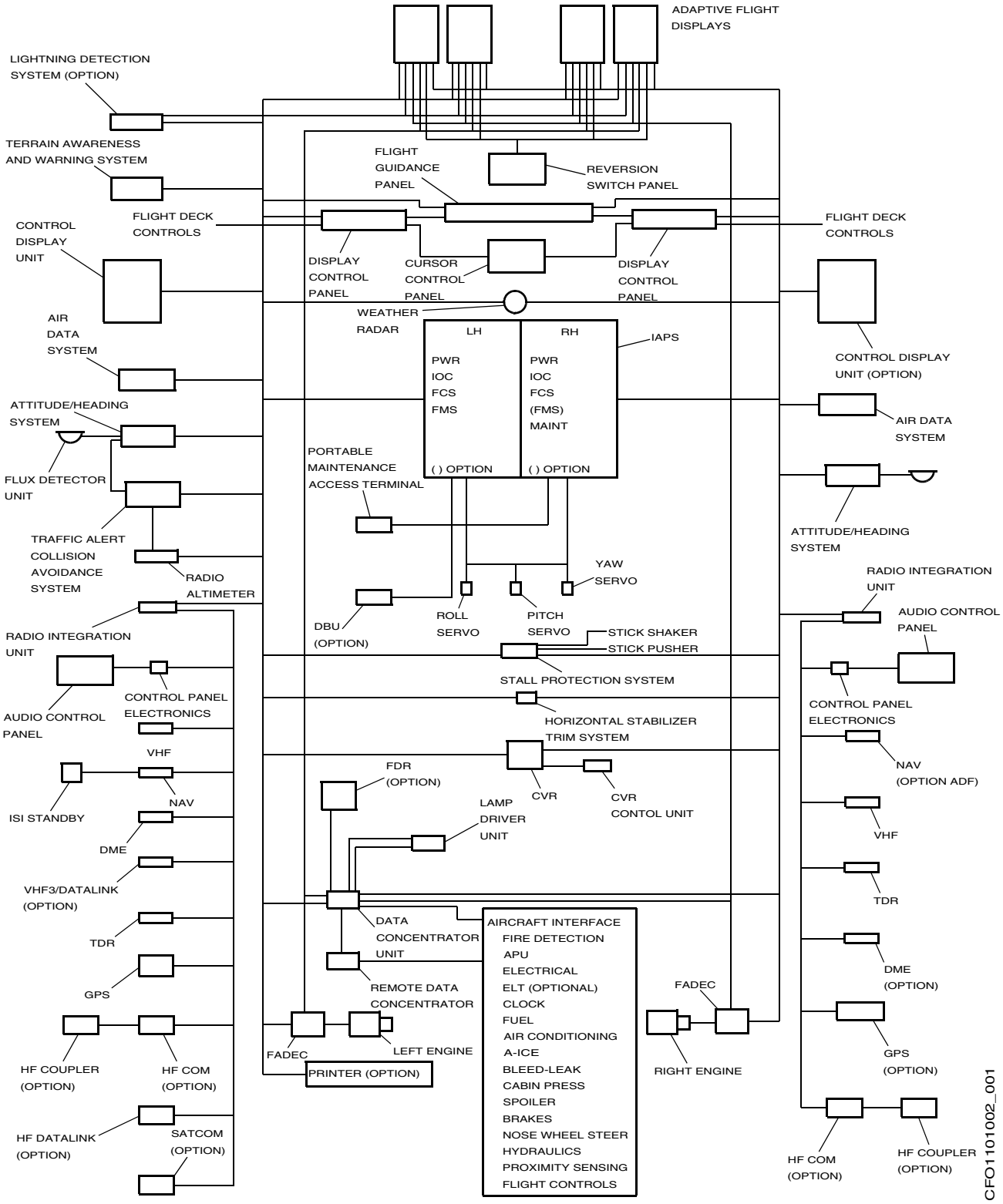

PRIMARY FLIGHT DISPLAYS

DESCRIPTION

The primary flight displays (PFD) are integrated displays of attitude, air data, and navigation information. The PFD is divided into the following main areas:

- Attitude display
- Airspeed/Mach display
- Altitude display
- Vertical speed display
- AFCS mode display
- Navigation display

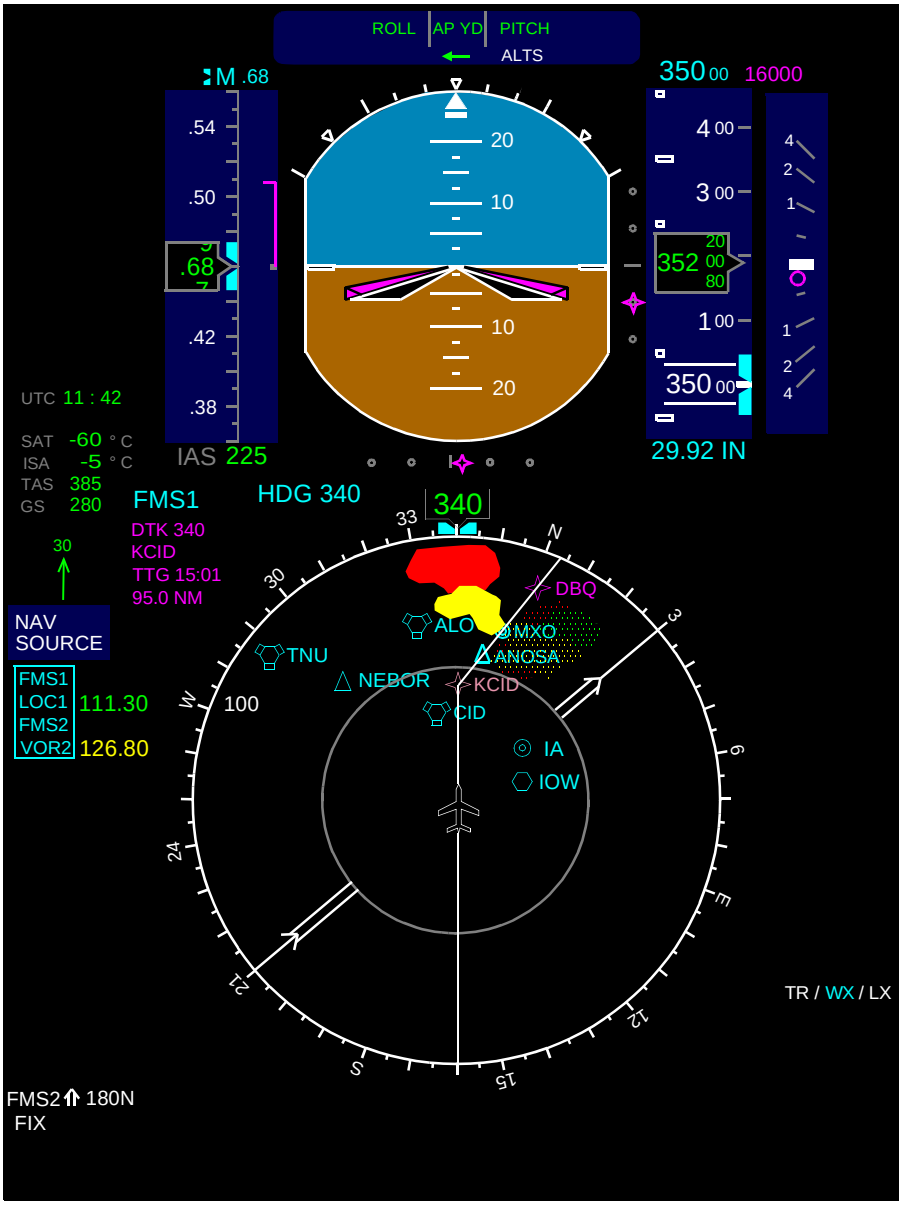

CFO1101002_022

PRIMARY FLIGHT DISPLAYS (Cont)

COMPONENTS AND OPERATION

ATTITUDE DISPLAY

The aircraft attitude indication on the primary flight display (PFD) provides pitch, roll, and yaw information supplied by the AHRS.

AIRCRAFT SYMBOL

The aircraft symbol is a stationary representation of the aircraft and is represented by a black symbol with a white outline. Two small white rectangular wing symbols are shown to the left and right of the aircraft symbol. The aircraft symbol horizontal wings can be used with the cross pointers or the triangle shape used with the V-bars flight director.

HORIZON LINE

The horizon line is the midpoint indication of aircraft attitude. With zero degrees of pitch and roll, the white horizontal line touches the apex of the aircraft symbol and passes through the center of the aircraft wing symbol.

SKY/GROUND DISPLAY

This blue-and-brown image provides a visual representation of the actual position of the sky and ground with respect to the aircraft.

PITCH TAPE AND CHEVRONS

The pitch tape is fixed on the attitude sphere and moves with the horizon line. The tape has wide line markings every 10 degrees, medium line markings every 5 degrees and small line markings every 2.5 degrees.

Red warning chevrons appear during maneuvers of excessive pitch attitude pointing toward the zero degree position.

PRIMARY FLIGHT DISPLAYS (Cont)

ROLL SCALE AND POINTER

At the top of the blue display is a roll scale and pointer. The scale covers ± 60 degrees from level attitude.

The scale is marked as follows:

- Small triangle at 0 degrees of bank angle
- Large tick marks at ± 30 and ± 60 degrees
- Small tick marks at ± 10 and ± 20 degrees
- Small triangle at ± 45 degrees

The roll pointer moves in reference to the center of the aircraft symbol and indicates aircraft roll angle.

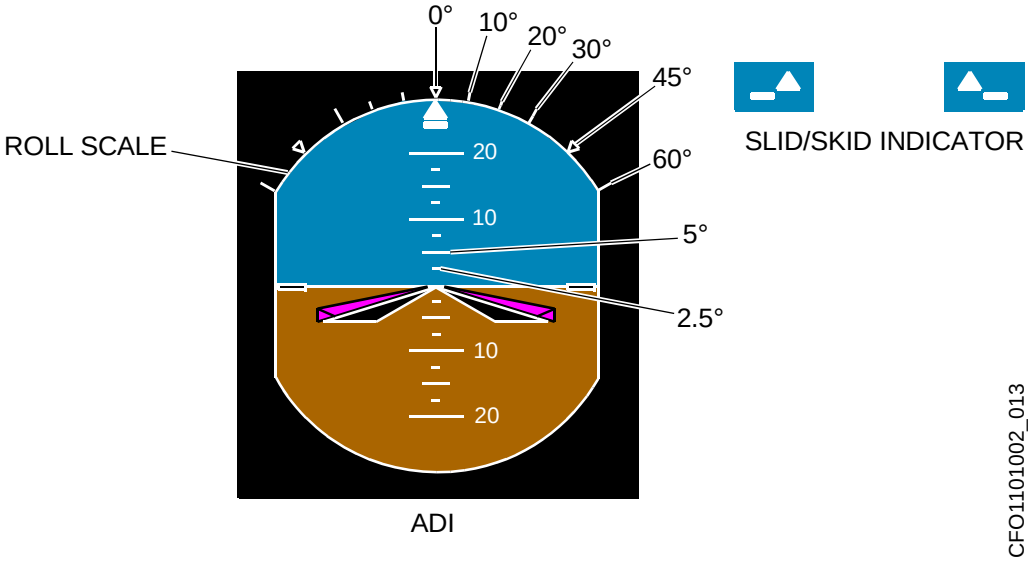

SLIP/SKID INDICATOR

The slip/skid indicator is a small rectangle located below the roll pointer. The slip/skid indicator is driven by lateral acceleration. It turns with the roll pointer and moves laterally with respect to the base of the roll pointer.

One brick width deflection of the rectangle is equivalent to a displacement of one ball width on a conventional slip/skid indicator.

VERTICAL DEVIATION DISPLAY

The vertical deviation display is shown to the right of the attitude display. It is a white fixed scale employing a moving deviation icon. The color of the deviation icon is green when displaying the on-side data and is amber when displaying cross-side data.

The scale has two dots above and below a reference line with each dot representing a 1/4 degree deviation above or below the glideslope beam. There is a diamond for glideslope data and a star for VNAV data.

GLIDESLOPE FLAG

During an ILS, with invalid glideslope information, a red boxed GS flag is displayed, replacing the pointer and scale.

PRIMARY FLIGHT DISPLAYS (Cont)

DECLUTTER

De-clutter is used to clear all nonessential information from the PFD during aircraft upset or unusual attitudes.

When the pitch angle exceeds +30 or -20 degrees, or roll exceeds 65 degrees left or right, only the following information is displayed on the PFD:

- Altitude
- Airspeed
- Attitude
- Vertical speed
- Heading indication
- FCC transfer indicator

When the pitch and roll limits are restored, the PFD resumes displaying all information.

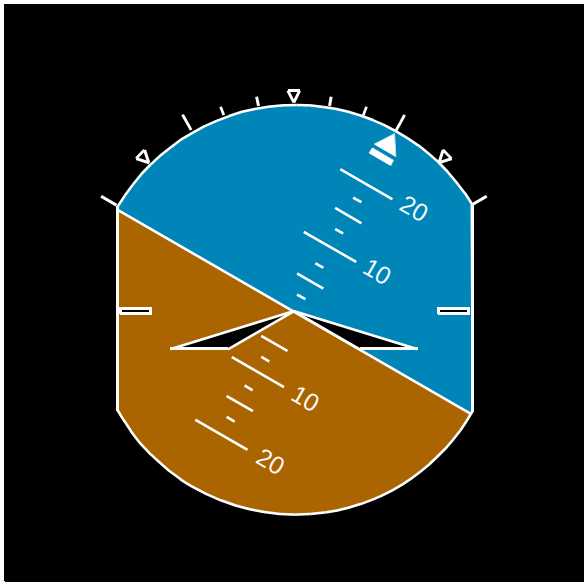

CFO1101002_018

Example of decluttered EADI in excessive roll

PRIMARY FLIGHT DISPLAYS (Cont)

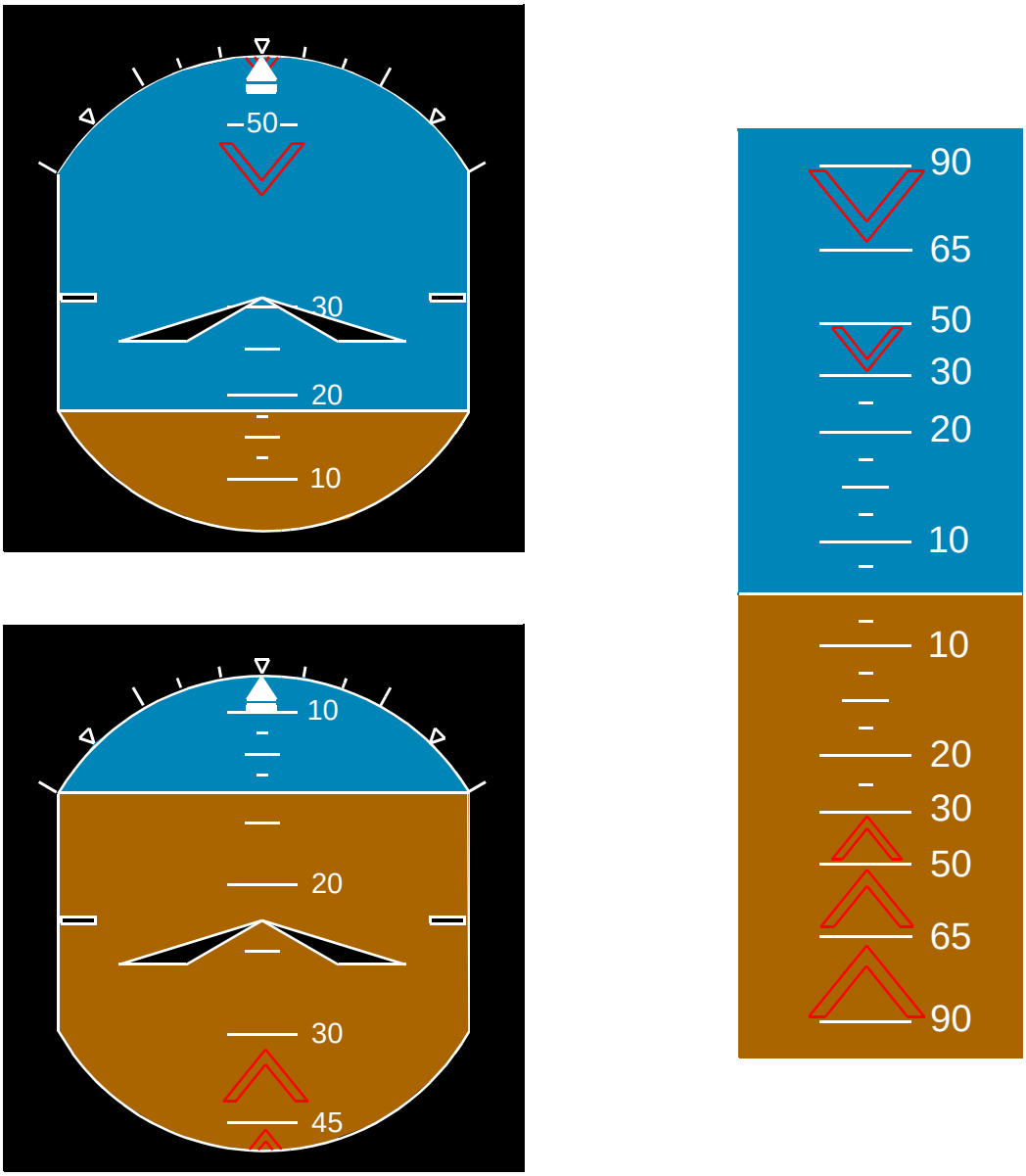

Example of decluttered EADI in excessive pitch

PRIMARY FLIGHT DISPLAYS (Cont)

ALTITUDE

Barometric altitude information on the PFD consists of:

- Altitude display and readout
- Preselect altitude
- Altitude alert
- Barometric pressure setting readout
- Minimum descent altitude (MDA)

The ADC calculates the pressure altitude and barometric corrected altitude. The altitude is preselected with the controls on the FGP. Barometric pressure setting and DH/MDA is set through the REFS menu.

ALTITUDE DISPLAY

The altitude display is shown on the right side of the PFD as a moving tape with a fixed digital readout window.

The fine portion of the tape is marked and numbered every 100 feet. The coarse portion of the tape is used to assist the pilot in altitude captures and gross altitude awareness and is not numbered. It is marked with large rectangles for increments of 1000 feet and small rectangles for 500 feet. The barometric altitude readout ranges from -1000 feet to 50 000 feet. The digital readout in the fixed altitude window indicates the actual altitude.

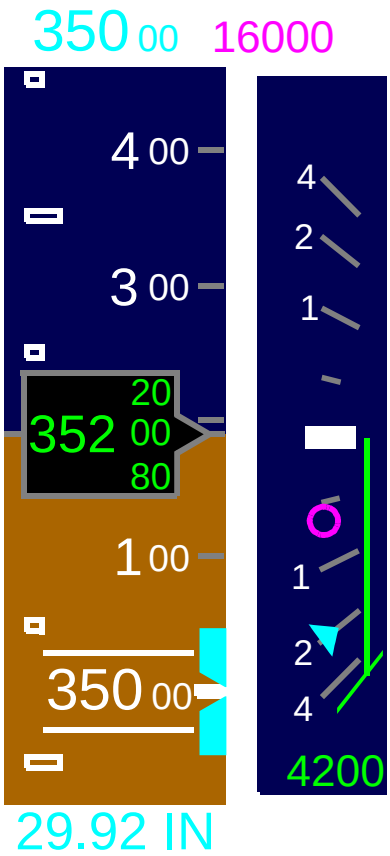

PRIMARY FLIGHT DISPLAYS (Cont)

ALTITUDE DISPLAY (Cont)

PRESELECTED ALTITUDE

The preselected altitude bug and digital readouts are set by using the ALT knob on the FGP. The preselect altitude is a reference for the altitude alert and autopilot systems. If the spring operated ALT knob is pushed, the preselect altitude increments are 100 feet or 10 meters. If the ALT knob is in the normal out position, the preselect altitude increments are 1000 feet or 100 meters. If a hundred foot value has been previously set, this will be reset to the next higher/lower thousands value with the first rotation of the knob.

When BARO MIN is ON, the preselect altitude can be set at the value of BARO MIN. Rotating the knob one click counterclockwise from the closest thousand food increment above the baro minimums will result in the altitude preselect being set at the exact baro minimums. this allows leveling off at the exact non-precision approach minimums using the flight director or autopilot on approach.

The cyan preselect altitude readout is displayed above the altitude tape and has a selection range of -1000 feet to 45 000 feet in increments of 100 feet.

The range of the metric preselect altitude is from -300 meters to 17 000 meters.

ALTITUDE ALERT MODES

The altitude alert functions in the acquisition, deviation, and tracking modes.

The preselect altitude bug will change color and flash when the altitude acquisition and deviation parameters are exceeded. Aural alerts accompany the visual alerts for acquisition and deviation modes.

Pressing the ALT knob will cancel an altitude alert if active.

ACQUISITION MODE

Both preselect altitude bugs flash cyan and an aural “C-chord” tone is heard when the aircraft altitude is 1000 feet above or below the preselected altitude.

DEVIATION MODE

When an altitude deviation of 200 feet or more above or below the selected altitude occurs, both preselect indicators flash amber and the “C-chord” tone is heard.

TRACKING

Monitoring of the preselected altitude tracking is a function of the ADCs.

VERTICAL NAVIGATION

When vertical navigation is selected (VNAV), the following are displayed:

- FMS reference altitude
- Vertical deviation and scale
- Suggested vertical speed (circular bug)

VERTICAL SPEED FIELD

The vertical speed (VS) display consists of a vertical analog scale and pointer with a green “drag line”. A part-time digital readout of the vertical speed is also provided. The VS pointer moves up and down the scale to indicate current VS. As the pointer moves, the drag line appears to emphasize the VS.

The vertical speed scale has a range of ± 4000 fpm. A part-time digital readout of the vertical speed is displayed on either the top or bottom of the vertical speed scale respective of climb or descent.

Selected VS shows on the VS scale as a reference bug, and as a digital readout on the automatic flight control system (AFCS) mode field above the attitude ball.

PRIMARY FLIGHT DISPLAYS (Cont)

VERTICAL SPEED FIELD (Cont)

Selected VS only shows when the AFCS VS mode is active and the UP/DOWN wheel on the flight guidance panel is used to set the selected VS. When VS mode is selected, the VS readout in the AFCS mode field appears. It is preceded by a VS bug icon, and followed by an arrow. The readout, icon, and arrow remain in view as long as the VS mode is active. The VS

bug and display in the AFCS mode field show in cyan when commanded by the UP/DOWN wheel on the FGP. The readout icon and bug are magenta when the FMS is in control.

The vertical speed scale is also used to display TCAS advisory deviations. The FMS vertical speed required (VSR) advisory pointer is a magenta open circle, that indicates the minimum average VS required to climb or descend from the present position to the next climb (or descend) altitude constraint. The FMS must be the active NAV source for the pointer to be displayed.

RADIO ALTITUDE DISPLAY

The PFD radio altitude display is presented as both a digital and moving tape readout.

The digital readout is displayed from -20 to 2500 feet above ground level (AGL), in the lower center part of the ADI ball.

To set the RA/ BARO MIN, or MIN ALERT, push the REFS button on the DCP to display and scroll through the menu pages on the PFD. Rotate the MENU knob to position the cyan cursor box around the selectable value for the RA/BARO MINS. The PUSH SELECT button on the DCP selects the next MIN ALERT option in the sequence. Rotating the DATA knob, on the DCP, increases or decreases the values to be set. To change a value, the cyan selection box must be moved to that value. The selected value shows in large cyan text; non-selected text will show in small white text. The menu pages are automatically removed from the PFD 20 seconds after the last activity.

RADIO ALTITUDE FLAG

If the radio altitude data is invalid, a red boxed RA label is displayed and the radio altitude tape and digit readouts are removed.

RA MIN

The digital range can be selected from 0 to 999 feet and is set on the REFS menu. When the aircraft descends to decision height, an amber boxed MIN indication is displayed when selected minimums are reached.

BARO MIN

BARO MIN has a range of 0 to 15 000 feet and is set on the REFS menu. The selected minimums will display in cyan as MIN XXX RA or MIN XXX BARO, depending on which was set. The XXX represents the selected digital value.

As minimum descent altitude is approached, the cyan minimums pointer appears on the altitude tape. When the aircraft reaches minimums, a flashing amber MIN label is presented on the right edge of the attitude indicator.

AIR DATA FLAGS

When ADC airspeed, altitude or vertical speed data is invalid, red air data flags are presented to replace the affected systems information.

AIR DATA SYSTEM

DESCRIPTION

Air data information is sensed by the pitot static system and total air temperature (TAT) probe. This data is processed by the air data computers (ADCs) and sent to the flight displays, IAPS, and several aircraft systems. Cockpit controls include the BARO SET knob, ADC REVERSION switch, several flight guidance panel (FGP) controls, and the reference speeds (REFS) menu settings.

COMPONENTS AND OPERATION

Airspeed information displayed on the PFD include:

- Airspeed display
- Reference speeds
- Low/high/speed cues
- Airspeed trend vector
- Mach number display

The V_1, V_R, V_2, V_{REF}, V_{GA}, and V_T reference speeds are set through the REFS push button on the display control panel. The SPEED knob, on the flight guidance panel (FGP) is used to set the cyan speed bug on the airspeed display.

AIRSPEED DISPLAY

The airspeed display is a moving vertical tape, with the digital display of the current airspeed in the fixed window. The display is located to the left of the attitude sphere on the PFDs. The current Mach number is indicated as a digital value at the bottom of the tape. If the aircraft speed is greater than 0.4 Mach, the crew can select a Mach tape, which replaces the airspeed tape.

The indicated airspeed tape has an airspeed range from 40 to 400 kt. The tape has a scale that is marked every 5 kt and numerically marked every 20 kt.

REFERENCE SPEEDS

The takeoff reference speeds are presented on the speed scale as a V_1, V_R, V_2, and V_T. Manually set V speed values show in cyan characters; optional FMS-calculated V speed characters show in magenta.

The FGP SPEED knob is used to select and set the airspeed reference bug to the desired speed on the airspeed tape. The speed bug is located beside the selected speed with a ± 5 knot deviation indication.

When the center of the SPEED knob is depressed, the speed reference toggles between Mach and speed.

LOW/OVERSPEED/FLAP SPEED CUES

A low speed cue indicates a calculated airspeed of 1.06 V_S. It appears from the lower portion of the airspeed scale and is displayed as a solid red line that changes to an expanded alternating red and black band when the aircraft is within a few knots of activating the stickshaker. The top of this cue visually represents the speed at which the stick shaker will activate.

An overspeed cue is provided to indicate the maximum operating speed. It appears in the upper portion of the airspeed scale and is displayed as a solid redline that changes to an alternating red and black band when approaching overspeed.The overspeed cue reduces to the flap operating speed limit when the flaps are extended.

TREND VECTOR

The airspeed trend vector originates from the tail of the indicated airspeed arrow. The magenta trend vector moves vertically in response to the aircraft acceleration or deceleration indicating the speed predicted in the next 10 seconds.

AIR DATA SYSTEM (Cont)

ALTIMETER BAROMETER KNOB

The ALTM BARO knob is rotated to increase or decrease barometric pressure setting. The barometric setting is displayed on the PFD. The standard barometric pressure setting of 29.92 inches of mercury, or 1013 hPa, is selected when the center of the BARO knob is pressed.

AIR DATA REVERSION SWITCH

The AIR DATA switch is located on the reversion panel on the center pedestal. When NORM is selected, the pilot's and copilot's adaptive flight displays receive data from their respective air data computer (ADC).

When '1' is selected, the pilot's and copilot's adaptive flight displays receive data from ADC 1 only. An amber ADC 1 message is displayed on both PFDs.

When '2' is selected, the pilot's and copilot's adaptive flight displays receive data from ADC 2 only. An amber ADC 2 message is displayed on both PFDs.

AIR DATA COMPUTERS

Each ADC senses total pressure, static pressure, and total temperature. The pressure sensors are solid-state piezoresistive type, and transform the pressure to an analog electrical signal. The analog signal is then digitized and used for all ADC calculations. Data is then passed from the ADCs to the cockpit displays, IAPS, other aircraft systems.

The ADC calculates the following air data parameters:

- Pressure altitude
- Static pressure
- Total pressure
- Vertical speed
- Airspeed
- Mach number
- Maximum airspeed (V_{MO})/maximum mach number (M_{MO})
- Baro correction
- Barometric corrected altitude
- Static air temperature
- Total air temperature
- True AIRSPEED
- Temperature difference from standard (ISA)

AIR DATA SYSTEM (Cont)

PITOT STATIC SYSTEM

The aircraft is equipped with a primary pitot static system and a standby pitot static system. The primary pitot static system provides total and static pressures to air data computers (ADC) 1 and 2. The pressures are sensed by left and right pitot static probes. The standby pitot static system provides total and static pressures to the integrated standby instrument. The pressures are sensed by a standby pitot probe and two flush mounted standby static ports.

The primary pitot static probes each have one total pressure port and two static pressure ports. The standby pitot probe has a single pressure port. All of the probes and the flush standby static ports are electrically heated. Probe heat is discussed in Chapter 14, Ice and Rain Protection.

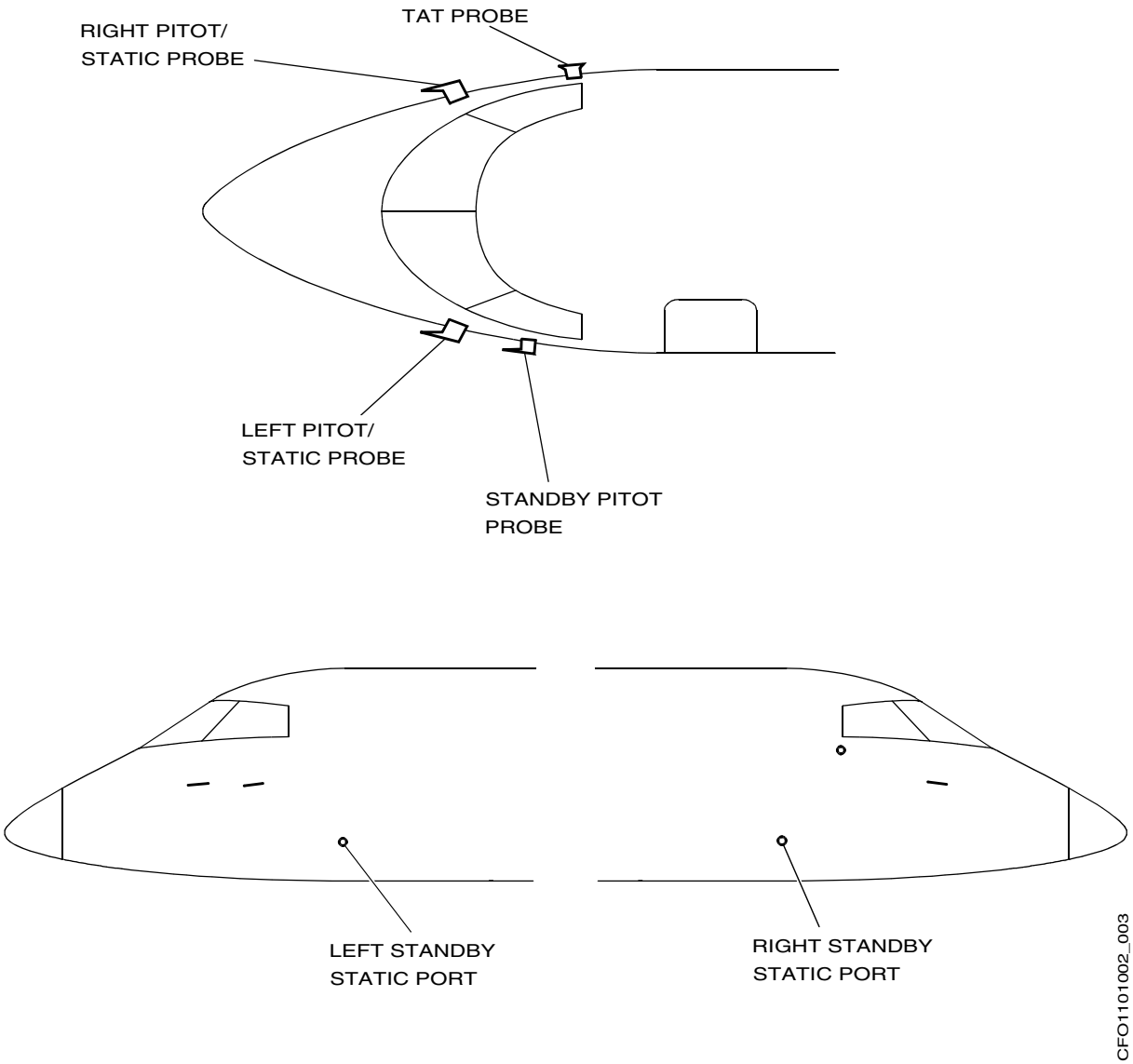

AIR DATA SYSTEM (Cont)

TOTAL AIR TEMPERATURE PROBE

An electrically heated total air temperature (TAT) probe is mounted on the right forward fuselage. The TAT probe has two independent temperature sensors. One sensor is connected to ADC 1 and the other to ADC 2.

The ADCs use the total air temperature to calculate the static air temperature (SAT) and the true airspeed (TAS).

The use and distribution of the pitot and static sources are as follows:

- P1 is the normal pitot input to ADC 1
- S1 is the normal static input to ADC 1
- P2 is the normal pitot input to ADC 2
- S2 is the normal static input to ADC 2

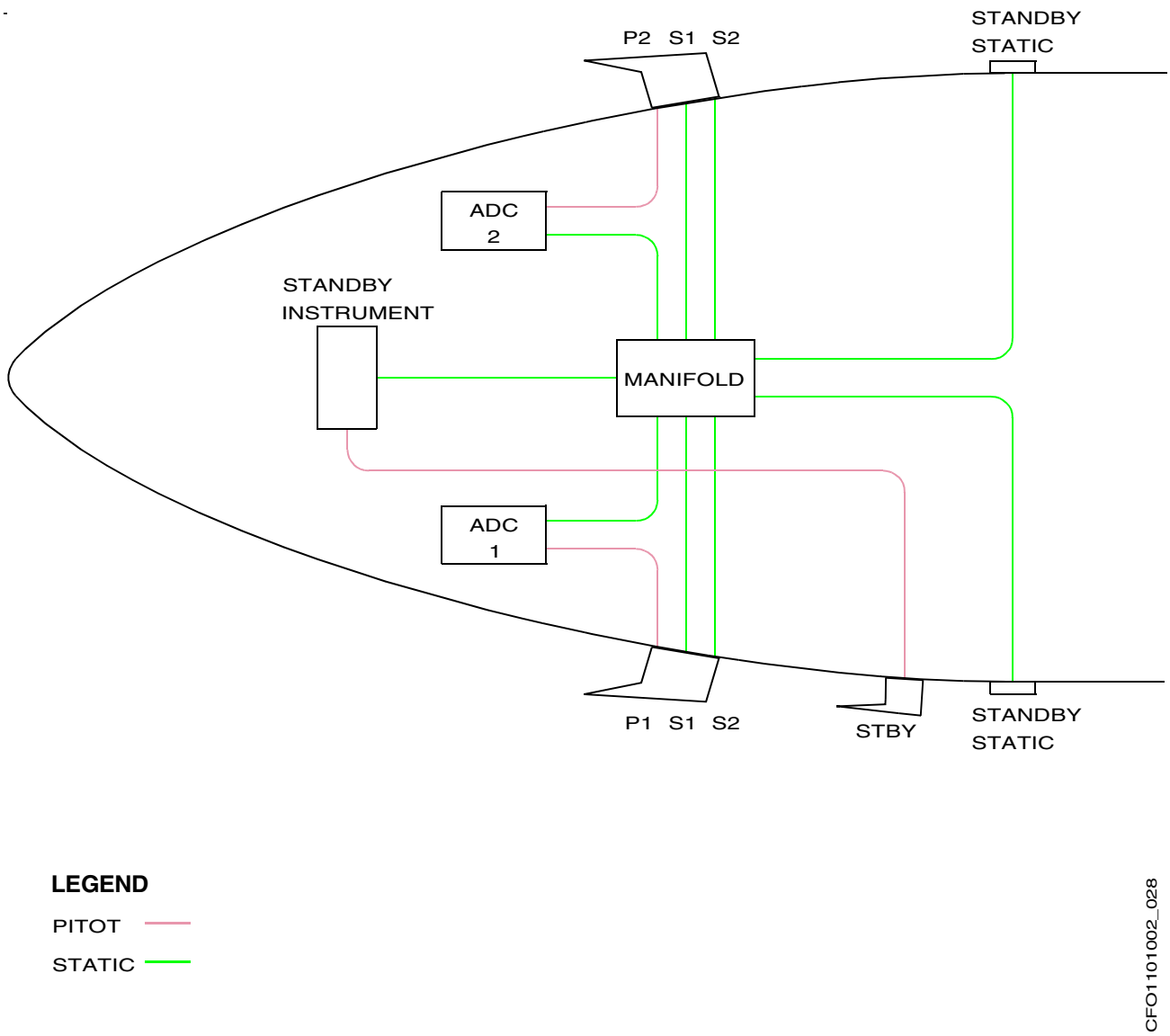

ATTITUDE AND HEADING REFERENCE SYSTEM (AHRS)

INTRODUCTION

The aircraft attitude and heading reference system (AHRS) is a strapped gyro reference system that generates angular rate and linear acceleration information about the aircraft axes.

Combining the acceleration gyro information with heading data from the flux detector provides highly accurate three-axes AHRS information.

The AHRS interfaces with the following systems:

- EFIS
- Weather radar
- Autoflight control system (AFCS)
- Flight data recorder (FDR)
- Integrated avionics processor system (IAPS)
- Terrain awareness warning system (TAWS)
- Traffic alert and collision avoidance system (TCAS)
- Stall protection system

The AHRS consists of two computers, two flux detector units and two external compensator units. Both Attitude Heading Reference Systems are active permanently. AHRS mode selections are carried out through the COMPASS HEADING and COMPASS SLEW switches. The AHRS normally operates in magnetic mode (MAG). Directional gyro mode (DG) may be selected in areas where magnetic field disruptions exist.

The AHS-3000/3000A system is not designed for use as a polar navigator. Flying in or around the fringe of low magnetic flux areas can cause temporary dropouts in required flux levels for the system to operate properly.

Initialization and operation of the AHRS occurs automatically when electrical power is established and the aircraft is stationary. Initialization takes approximately 40 seconds in MAG mode and 4.5 minutes in DG mode.

ATTITUDE AND HEADING REFERENCE SYSTEM (Cont)

COMPONENTS AND OPERATION

AHRS COMPUTERS

Each AHRS computer has a dual-sensor assembly. Each sensor assembly has four pairs of piezoelectric accelerometer sensors mounted on a rotating wheel. These sensors provide the rate and acceleration data.

The sensor data combined with ADC and heading information is processed by the AHRS computers and transmitted for use by the adaptive flight displays (AFD), and by the integrated avionics processor system (IAPS), which itself interfaces with the flight guidance computer (FGC) and flight management system (FMS).

MAGNETIC FLUX DETECTORS

Each of the two magnetic flux detectors senses the earth's magnetic field and provides corrected heading information to its respective attitude heading computer.

External compensator units store corrections for any north/south, east/west or misalignment of the flux detectors.

COMPASS CONTROL AND SLEW SWITCHES

There are two COMPASS HEADING switches and SLEW switches located on either side of the main flight instrument panel. There are two modes of operation, magnetic heading (slaved) mode, and directional gyro (DG or free gyro) mode. The HEADING switches are used to select the mode.

In the magnetic heading mode, heading computations are slaved to the attitude heading computer and the flux detectors. In DG mode, magnetic flux detector data is removed. DG mode is not intended for long term heading reference.

In DG mode, the selection of the SLEW switch causes the heading to slew in the selected direction.

CFO1101002_026

ATT/HDG REVERSION SWITCH

The ATT/HDG switch is located on the center pedestal. When NORM is selected, the left PFD and MFD receive data from AHRS1 and the right PFD and MFD receive data from AHRS2.

When the switch is selected to 1, all displays receive data from AHRS 1 only. An amber AHS1 message is displayed on both PFDs.

When the switch is selected to 2, all displays receive data from AHRS 2 only. An amber AHS2 message is displayed on both PFDs.

ATTITUDE AND HEADING REFERENCE SYSTEM (Cont)

GROUND ALIGNMENT

During the ground alignment process, the PFD displays the red ATT and MAG flags along with the message ATT/HDG ALIGNING DO NOT TAXI.

When the alignment is complete, the messages are removed and the attitude sphere is displayed. The aircraft can be moved at this time.

If excessive airplane motion is detected during a ground alignment, the AHRS automatically re-initializes.

FLIGHT ALIGNMENT

If an airborne alignment occurs due to power interruption, the system will take 40 seconds to realign. During the in-flight alignment process, the aircraft must remain in a straight and level unaccelerated flight.

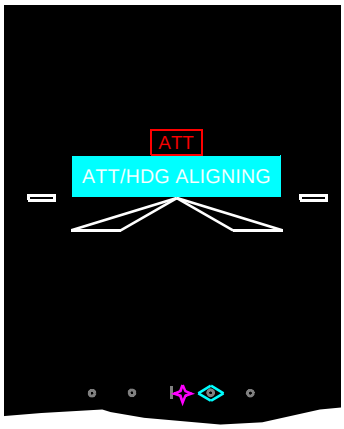

HEADING DISPLAY

DESCRIPTION

The aircraft is displayed on a partial compass card located at the bottom of the PFD. Data required to produce the display is supplied by the AHRS system.

With an AHRS installation, magnetic or directional gyro may be displayed.

COMPONENTS AND OPERATION

HEADING INDICATORS

The heading indications are represented on the compass card, the display shows 360° from the current heading. The compass card has 10° major indices, 5° minor indices, cardinal point characters at N, S, E, W, and numeric labels at 30° intervals.

At the top center position of the compass card is the fixed lubber line. The lubber line indicates the aircraft heading reference.

SELECTED HEADING REFERENCE

The selected heading reference is presented on the heading display as a heading bug, bug vector and heading readout.

The heading bug indicates the heading selected at the HDG knob on the flight guidance panel.

ATTITUDE AND HEADING FLAGS

When the attitude or heading data from the AHRS becomes invalid, warning flags are presented.

A red boxed attitude flag ‘ATT’ is displayed when the attitude information is invalid. All other attitude information disappears from the PFD.

A red boxed heading flag HDG is displayed when the heading source is invalid. When the flag is in view, it replaces the heading readout, the compass rose (or arc) is rotated to north-up, and the lubber line around the digital heading is removed.

NAVIGATION DISPLAYS

DESCRIPTION

The navigation indications on the primary flight display provide course, course deviation, bearing and distance information from the selected navaid. The data is presented in a conventional HSI format.

COMPONENTS AND OPERATION

NAVIGATION DATA

Navigation data is displayed on the lower part of the PFD. The display includes:

- Navigation source indicator.
- Course display.
- Distance display.
- Station identifier.

NAVIGATION SOURCE INDICATOR

The navigation source indicator is presented in digital format. Navigation source is selected at the NAV SRC button on the DCP. This opens a menu window vertically on the left side of the PFD. By repeatedly pushing the NAV SRC switch on the DCP the available list will be shown.

- VOR 1/LOC 1
- VOR 2/LOC 2
- FMS 1/FMS 2
- OFF (no display)

COURSE DISPLAY

The selected source display is a three-digit display preceded by a CRS label.

The course range is from 1 to 360 degrees and is selected from the CRS knob on the FGP.

COURSE POINTER

The course pointer is an arrow that points to the course position of the compass card.

The course pointer is controlled by the CRS selector knob on the FGP. The on-side color is green and cross-side is amber.

LATERAL DEVIATION BAR

The lateral deviation bar indicates aircraft deviation from the selected course.

The lateral deviation bar moves from side to side and its position is read against the deviation scale.

TRACK POINTER

The track pointer is positioned on the compass rose or compass tape at the current aircraft track over the earth. The track pointer is a green open circle shape. The difference between the track pointer position and the lubber line is the drift angle.

NAVIGATION DISPLAYS (Cont)

BEARING POINTERS

The bearing pointers display bearing information from a selected navaid.

Two bearing pointers can be displayed on the compass rose or PPOS map format; one from number 1 bearing source, and the other from number 2 bearing source. The bearing pointer from the number 1source is a cyan single lined pointer. The bearing pointer from number 2 source is a white double lined pointer. Bearing icons are miniature representations of the bearing pointers that are used to identify the actively selected bearing pointer. The bearing source display is blank if the BRG source selection is OFF. The bearing pointer is removed from view when bearing source is invalid.

The source indicator and pointers are selectable through the BRG SRC push button on the DCP. The bearing source indicators are displayed vertically in the lower left portion of the PFD. The selection box is moved with the MENU knob to select the number 1 or number 2 bearing pointers. The PUSH SELECT or DATA knob is used to select the bearing source or OFF.

As in the navigation source indicator, the bearing source indicator and bearing pointers show which bearing source is in use:

- VOR 1/VOR 2
- ADF 1/ADF 2
- FMS 1/FMS 2
- OFF (no display)

DISTANCE DISPLAY

The distance display shows the DME slant range distance to the navaid station.

When the DME H button is selected on the DCP, the held DME frequency replaces the AUTO annunciation on the NAV CONTROL menu, the DME frequency can be tuned separately from the VOR frequency. When the DME transceiver is in hold mode, a cyan “H” is placed beside the DME frequency in the NAV replaces the normally green “NM” on the PFD.

When the DME TEST control is selected, the TEST annunciation shows in large cyan text. The DME distance is 100 NM, the TTG is 60 minutes, the station ID is AOK, and the ground speed is 100 knots. This test lasts about 10 seconds.

STATION IDENTIFIER

The navaid identifier is shown in the navigation data field above the distance display. Data for the identifier is supplied by the DME. In DME hold, the identifier is removed from view.

NAVIGATION ALERT FLAGS

NAVIGATION SOURCE WARNING FLAG

A red boxed navigation source flag (VOR, LOC, and FMS) is displayed during a failure of the selected NAV source. The navigation display is removed from view when the flag is displayed.

BEARING FLAG

Invalid data from the selected bearing source causes the bearing source annunciator to be replaced by a red boxed warning flag. The bearing pointer is removed from view when the flag is displayed.

HORIZONTAL SITUATION INDICATOR (HSI)

The horizontal situation indicator (HSI) represents the compass card, which incorporates selectable navaids, bearing and course pointers. HSI indications include:

- Course pointer
- Lateral deviation bar
- Lateral deviation scale
- To/from indicator

NAVIGATION DISPLAYS (Cont)

LATERAL DEVIATION SCALE

The lateral deviation scale has two dots on each side of the course arrow. Each dot represents:

- In VOR, 5° of deviation
- In LOC, 1° of deviation
- In FMS, 5 nautical miles

TO/FROM INDICATOR

The TO/FROM arrow is an outlined triangle on the course/desired track pointer. The arrow points toward the head of the pointer to indicate a “TO” and toward the tail to indicate a “from”.

The color of the TO/FROM indicator is green for VOR onside information and amber for cross-side information.

In FMS mode the entire display is magenta.

AUTO FLIGHT CONTROL SYSTEM DISPLAY

The PFD presents automatic flight control system (AFCS) information consisting of flight guidance mode, autopilot mode indications, and flight director command bars.

AUTOPILOT INDICATION

Autopilot information concerning engagement, disengagement and flight director in use is displayed in the top center portion of the attitude display. A green AP indicates the autopilot has been engaged and the horizontal arrow points to the FD coupled side.

A flashing red AP indicates that the autopilot has disengaged. The AP symbol flashes for five seconds and the aural cavalry charge is heard. A white arrow indicates that the autopilot is not engaged and control of the FD is transferred to the indicated side when engaged.

FLIGHT GUIDANCE MODE

Flight Guidance modes are displayed on the top center portion of the PFD, with three fields divided by thin vertical grey lines. The left field of the line represents the lateral modes. The center field represents AP/YD engagement. The right side represents the vertical modes. Active modes are green and armed modes are white.

1/2 BANK INDICATOR

When the aircraft climbs above 31 600 ft, the 1/2 bank flight director commands are automatically generated. The flight director 1/2 BANK mode can be manually selected on the FGP.

When the 1/2 BANK mode is active, a green arc is drawn above the top of the attitude scale above the ADI. The length of the marks represent 15 degrees of roll. Selecting the 1/2 BANK a second time disengages the mode.

FLIGHT DIRECTOR WARNING FLAG

A red boxed FD warning flag appears when either the pitch or the roll attitude input to the flight director becomes invalid. The flight director command bar is removed when the FD label is displayed.

FLIGHT DIRECTOR COMMAND BARS

The flight director command bars provide flight control computer guidance instructions. The magenta flight director command bars are a V-shaped cue symbol or cross pointers that are directed to move horizontally and vertically around the apex of the black stationary aircraft symbol. Selection of the command bars option is by pressing the REF button on the DCP. This provides a vertical menu on the left side of the PFD, with three pages of menus. Rotating the MENU/DAT knob scrolls through the various options and on the third page, the VBAR or XPNTR is selected by toggling the PUSH/SELECT button in the MENU/DATA knob on the DCP.

MULTIFUNCTION DISPLAYS (MFDs)

DESCRIPTION

The left and right multifunction displays (MFDs) are located in the center of the instrument panel. During normal operation, the top half of the left MFD displays EICAS data, including engine indications, full time system indications, and CAS messages. The top half of the right MFD displays the summary page, or the electronic checklist. For maintenance actions, the top half of the right MFD can also display maintenance diagnostic system information. The lower half of both the left and right MFDs can display synoptic or navigation information. The MFDs are controlled using the MFD control panel.

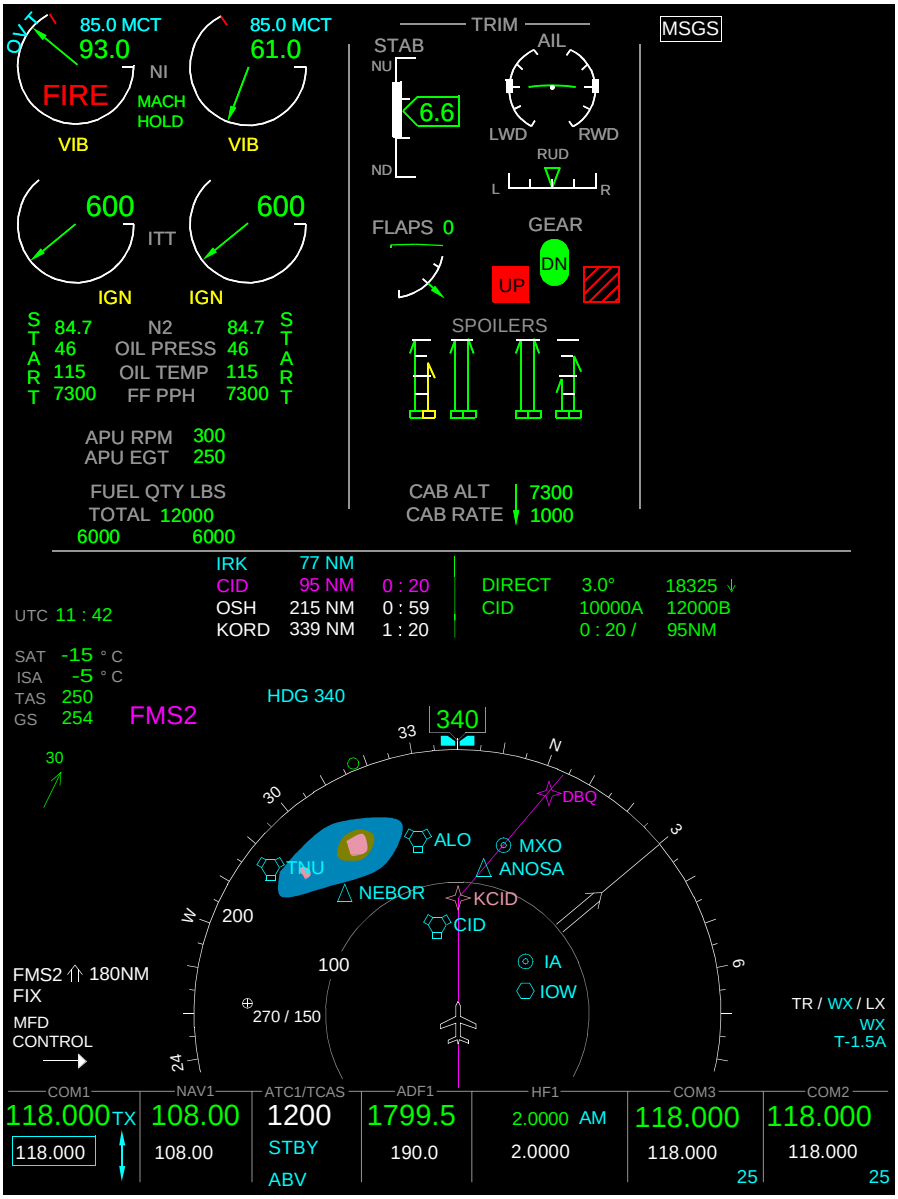

CFO1101002_005

MULTIFUNCTION DISPLAYS (MFDs) (Cont)

COMPONENTS AND OPERATION

MFD CONTROL PANEL

The MFD control panel is located on the center pedestal. The position of the L/R toggle switch determines which MFD will be controlled when button selections are made. The CCP controls CAS paging, electronic checklist functions, navigation displays, and synoptic displays.

CFO1101002_009

The following is a brief description of the MFD controls:

CAS

Pressing the CAS button will alternately page the CAS list out of view, or re-display the CAS list. Messages, except for warnings (Red), may be hidden by paging through all existing messages to a blank page. New messages will then appear on this blank page. All messages can be retrieved by subsequently pressing the CAS button on the MFD control panel.

CKLST

The CKLST switch is used to present or remove a checklist display on the MFD.

SKIP

The SKIP switch is used to skip checklist items on the display.

FRMT

The FRMT switch is used to select the MFD format (PPOS, Plan, and TCAS modes).

TFC

The TFC switch is used to select TCAS overlays on the MFD.

TR/WX

The TR/WX switch is used to select terrain, weather and lightning overlays on the MFD.

ENTER

The ENTER switch is associated with the joystick and enters the PPOS waypoint or selects the current menu item in the top half of the MFD.

SUMRY

The SUMRY switch is used to display the EICAS summary display on the MFD.

(Continued)

MULTIFUNCTION DISPLAYS (MFD) (Cont)

The following is a brief description of the MFD controls:

A/ICE

The A/ICE button is used to display the Anti-Ice synoptic page.

ECS

The ECS button is used to display the Environmental Control System synoptic page.

ELEC

The ELEC button is used to display the Electrical synoptic page.

FLT

The FLT button is used to display the Flight Controls synoptic page.

FUEL

The FUEL button is used to display the Fuel synoptic page.

HYD

The HYD button is used to display the Hydraulic synoptic page.

MFD CONTROL PANEL (Optional)

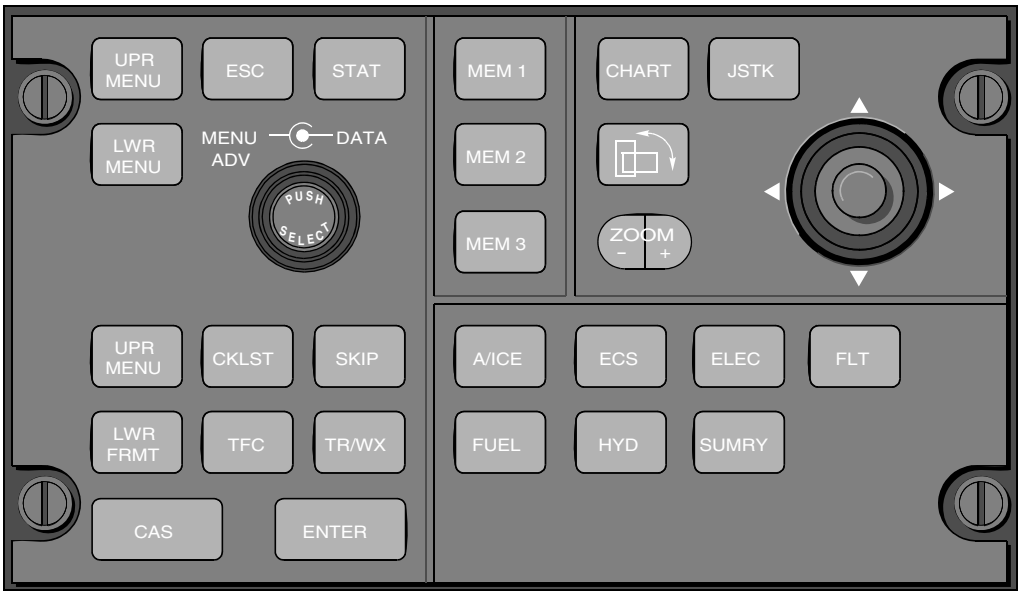

MENU ADV

Turn the MENU ADV knob to position the menu cursor around the desired shortcut, menu item, or alphanumeric entry field. Clockwise rotation of the knob moves the cursor down the page. Counterclockwise rotation moves the cursor up the page.

UPR MENU

The UPR MENU button is used to present or remove an upper menu. The content depends on the format.

ESC

Each push of the ESC button moves up one level through the menu tree until the top level is reached on the display.

(Continued)

MULTIFUNCTION DISPLAYS (MFD) (Cont)

STATUS

The STAT button is used to show lesser used MFD formats. The Status Menu is displayed when a Status Format Window is selected on the MFD and the UPR or LWR MENU button is pushed. The STAT menu includes the following formats:

- Database Effectivity
- Chart Subscription
- File Server Configuration

Each of the formats listed on the Status Menu provides a means to navigate to and use that format. Once the Status Menu is displayed, the MFD MENU ADV knob to move the focus indicator and press the PUSH SELECT button to select a full format presenting for display. Each time the STAT Menu is displayed, the focus indicator defaults to the top of the available format list.

LWR MENU

The LWR MENU button is used present or remove a lower menu. The content depends on the format.

DATA

When the data entry mode is active, rotate the DATA knob clockwise to move forward through the characters and counter-clockwise to move backwards through the characters. With a chart in view, rotate the DATA knob to cycle through the list of linked charts associated with the airport identified by the displayed chart.

PUSH SELECT

Push the PUSH SELECT button to select the item highlighted by the menu cursor.

UPR FRMT

The UPR FRMT button is used to select the MFD upper format (Summary, GWX if installed and OFF).

CKLST

The CKLST button is used to present or remove a checklist display on the MFD.

SKIP

The SKIP button is used to skip checklist items on the display.

LWR FRMT

The LWR FRMT button is used to select the MFD lower format (PPOS, PLAN, optional 3D PLAN, optional GWX and TCAS modes).

TFC

The TFC button is used to select TCAS overlays on the MFD.

TR/WX

The TR/WX button is used to select terrain, weather and lightning overlays on the MFD.

CAS

Pressing the CAS button will alternately page the CAS list out of view, or re-display the CAS list. Messages, except for warnings (Red), may be hidden by paging through all existing messages to a blank page. New messages will then appear on this blank page. All messages can be retrieved by subsequently pressing the CAS button on the MFD control.

(Continued)

MULTIFUNCTION DISPLAY (MFD) (Cont)

MFD CONTROL PANEL (Cont)

ENTER

The ENTER button works in conjunction with the joystick, but may not follow the JSTK button annunciation. When a Checklist page is displayed on the upper MFD, the ENTER button selects the current menu item highlighted by the cursor. When the PPOS, PLAN, or 3D map is active, the ENTER button enters the geographical coordinates of the cursor position, which is controlled by the joystick. To use the ENTER key with the joystick on the lower MFD, the electronic checklist or MDC Diagnostic page has to be deselected.

MEM1, MEM2, MEM3

Three quick access buttons located on the MFD controls used to store, then recall display format configurations for the same side MFD. Only combinations of split display formats, such as Checklist and PPOS Map, are stored. The full display formats (such as E-Charts) and FMS Text Only are accessed with dedicated controls.

Each of the three quick access buttons (MEM1, MEM2, and MEM3) on the MFD control allows the system to store the current values/states of MFD display parameters. To store the current MFD values/states, push any of the three MEM buttons for more than 3 seconds. The upper format, lower format, TERR, Radar (RDF)/Lightning (LX) overlay state, and TFC overlay state are stored. The messages that follow are available for display on the MFD when a store is requested:

- STORE FAULT is displayed when a fault is detected that prevents the system from storing the current MFD values/states.
- STORE is displayed when a MEM button is pushed for more than 3 seconds. This message indicates to the pilot that the button should be released to complete the STORE action.
- STORE COMPLETE is displayed when a MEM button is released and the current MFD display parameters have successfully been stored.

A recall is requested when one of the MEM buttons on the MFD control is pushed and released (in less than 3 seconds). When a set of formats are recalled using the MEM buttons, any full formats that are currently in view are replaced with the appropriate split view (upper and lower formats). The messages that follow are available for display on the MFD when a recall is requested:

- RECALL COMPLETE shows on the MFD when the recall action is complete.
- RECALL FAULT shows on the MFD when the system attempts to recall a set of MFD display parameters and cannot be achieved due to a fault.

CHART

Push the CHART button on the MFD control to show the last E-chart in view.

JSTK

The joystick control operates in both the upper and lower MFD window formats. A press of the JSTK pushbutton will change the window in which the joystick is currently operating and is indicated by the JOYSTICK annunciation arrow.

ROTATE

When a new chart is selected, the orientation is set to the default orientation determined by the Jeppesen database. The first push of the orientation button (located below the CHART button on the MFD control) rotates the chart 90 degrees. The second push rotates the chart back to its original orientation.

ZOOM

When a new chart is selected, the chart is initially scaled such that the width of the chart fills the display. When the chart is rotated to landscape, the chart is scaled again to allow the height of the chart to fill the display window. Operate the joystick to move the pan/zoom window to the area of the chart to be viewed with the zoom. The ZOOM feature is operated by a rocker switch with + and - markings. Pushing the + expands the view, pushing the - returns the chart to normal scaling.

(Continued)

MULTIFUNCTION DISPLAY (MFD) (Cont)

MFD CONTROL PANEL (Cont)

Joystick

With full scaling on, operate the joystick to move the pan/zoom window to the area of the chart to be enlarged. When zoomed in, operate the joystick to bring the area into view. With PPOS or PLAN, operate the joystick to create a user way-point.

A/ICE

The A/ICE button is used to display the Anti-Ice synoptic page.

ECS

The ECS button is used to display the Environmental Control System synoptic page.

ELEC

The ELEC button is used to display the Electrical synoptic page.

FLT

The FLT button is used to display the Flight Controls synoptic page.

FUEL

The FUEL button is used to display the Fuel synoptic page.

HYD

The HYD button is used to display the Hydraulic synoptic page.

SUMRY

The SUMRY button is used to display the EICAS summary display on the MFD.

3D Map Display (Optional)

The optional 3D Map Format is an advanced FMS feature that provides lateral, vertical and performance predicted flight plan information in a single combined three-dimensional (3D) format on the MFD. The 3D presentation depicts the flight plan and predicted vertical trajectory of the aircraft so the pilot can interpret the current and future aircraft situation. The display is referenced to true North and the waypoints are drawn at their actual latitude and longitude. The CCP Joystick, SHLDR, SIDE, and PLAN are used to control the presentation. The Joystick is used to rotate the display clockwise, counterclockwise, and vertical viewing angles from 90° to 0°. Refer to the Rockwell-Collins Pro Line 21 Avionics System Operator’s Guide for a more detailed description.

AUTO

When AUTO view is on, the MFD will automatically rotate the view to maintain a consistent viewing angle as the inbound course changes. When flying a curved flight leg or holding pattern, the viewing angle is the inbound course relative to the abeam point angle.

PLAN

When the PLAN switch is pushed, the display will give a vertical view of the inbound course.

SHLDR

When the SHLDR view is displayed, the viewing angle is 22° lateral and 75° vertical, relative to the inbound course.

SIDE

Selecting SIDE view on the 3D display will provide the pilot with 90° lateral and 90° vertical viewing angles, relative to the inbound course.

DISPLAY CONTROL PANEL (DCP)

DESCRIPTION

The display control panel (DCP) controls the information displayed on the PFD and controls the radio functions on the MFD.

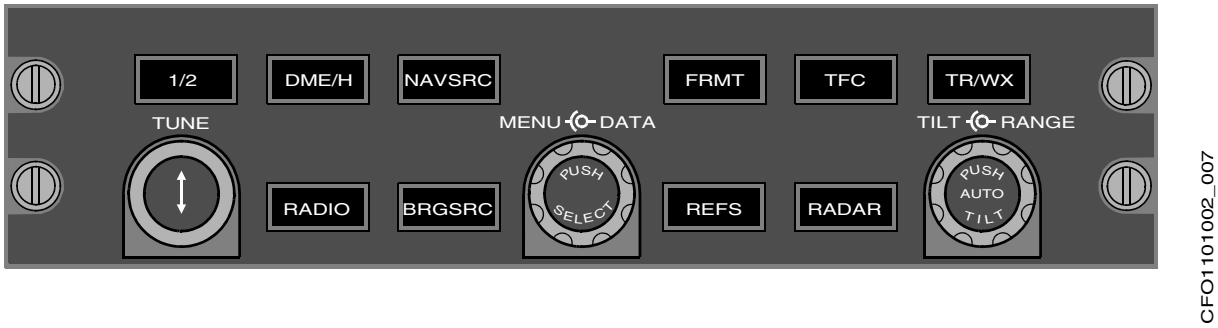

COMPONENTS AND OPERATION

The following is a brief description of the DCP control knobs, switches, and push buttons:

1/2

The 1/2 button selects and deselects the cross-side radio menu on the MFD. When a radio submenu is in view, the equivalent cross-side radio submenu is selected/deselected, when the RADIO button is pushed.

DME/H (DME HOLD)

The DME H button selects and deselects the DME hold function. When DME hold is selected, the DME holds the current NAV frequency while allowing the VOR radio to be independently tuned.

NAVSRC (NAVIGATION SOURCE)

The NAV SRC button enables the display of a list of NAV sources on the PFD with the next NAV Source selected. Repeated pushes of the NAV SRC button select the next listed NAV source as the new active NAV source. The NAV source list automatically times out.

FRMT (FORMAT)

The FRMT button directly selects the current PFD display format between present position (PPOS) and compass rose (ROSE).

TFC (TRAFFIC)

The TCAS is overlaid on the PFDs compass rose or map mode display by momentarily depressing the DCP TFC button. When there is not an active RA or TA, the range is the last active TCAS range A second momentary press of the TFC button removes the TCAS overlay. Continuously pressing TFC for more than 1 second selects the compass rose/TCAS format with the range set to the default 10 mi full range. Radar or terrain overlays, if previously displayed, are removed.

TR/WX (TERRAIN/WEATHER/LIGHTING)

The TR/WX button is a multiple mode selection button that selects and deselects the display of terrain, weather, and lightning (if installed) on the PFD. The first push of the TR/WX button selects a new state in the TR/WX list. The PFD automatically changes the range to an appropriate range if required. Pushing the TR/WX button again moves the cursor to the next available state. If the TAWS declares a terrain awareness warning or caution, pressing the TR/WX button causes an immediate response, regardless of the current format. The first momentary press of the TR/WX button selects terrain for display at its default 10 nm range and PPOS format.

TUNE

The tune knob is a rotary control used for MFD radio tuning. The larger and smaller knobs change the most significant and least significant digits of the frequency respectively. The up down arrow button in the center of the TUNE knob swaps the recall and the active frequencies.

DISPLAY CONTROL PANEL (DCP) (Cont)

RADIO

Pressing the RADIO button selects and deselects, on the MFD, the tuning control sub-menu of the radio associated with the current position of the tuning control. Pressing the RADIO button when another menu is displayed closes the menu and returns the tune box to its home position.

BRGSRC (BEARING SOURCE)

The BRG SRC button displays a menu of Bearing pointer sources on the PFD with the current Bearing pointer source highlighted. The Menu knob and Data knob and Push Select are used to select and deselect the Bearing pointers.

MENU/DATA/PUSH SELECT

The MENU knob is a rotary control used to move a cyan selection box, to allow activation of various display items on the PFD and MFD. The DATA knob is a rotary control used to change the value in the selection box.

The PUSH SELECT button located in the center of the MENU/DATA knob makes the value entered with DATA knob, the active display value or change the state of the item in the selection box.

REFS (REFERENCE)

The selected V-speed references are displayed on the airspeed display. V_1, V_R, V_2, V_T, V_{GA}, and V_{REF} are initialized to default values but deselected, which the pilot may change as required.

The REFS push button located on the DCP is used to select the desired reference menu. Repetitive pushes of the REFS button toggle through the three pages of the REFS menu.

RADAR

The RADAR button selects and deselects the radar control menu on the PFD. The radar control menu provides mode, ground clutter suppression, gain, sector scan, and target.

TILT-RANGE/PUSH AUTO TILT

The RANGE knob is a rotary knob with a function to control the decrease or increase of the PFD and MFD Nav display range until the minimum or maximum range is reached.

The TILT knob is a rotary control to select the radar antenna tilt range (-15 to +15 degrees).

The PUSH AUTO TILT button located in the center of the RANGE/TILT knob selects and deselects automatic tilt control.

DISPLAY CONTROL PANEL WARNING FLAG

A display control panel (DCP) failure results in the display of an amber boxed DCP flag. This flag will appear on the PFD and MFD displays.

REVERSION SWITCH PANEL

DESCRIPTION

The reversion switch panel provides an EFIS system capability for the selection of alternate sources of sensor data, radio tuning, and the selection of reversionary PFD modes.

STANDARD

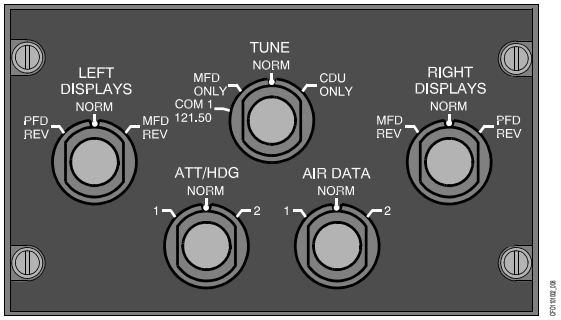

OPTIONAL

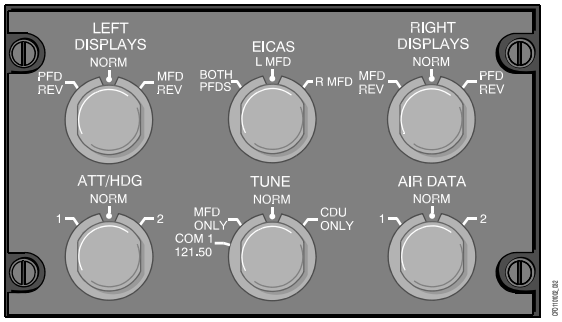

COMPONENTS AND OPERATION

The following is a brief description of the reversion switch panel switches:

LEFT DISPLAYS

The left display reversion switch is a three-position rotary switch, dedicated to enable the reversion of the left MFD/PFD displays.

Position — PFD REV

L-PFD displays compressed format. L-MFD is shut down.

Position — NORM

L-PFD format is normal. L-MFD format is normal.

Position — MFD REV

L-PFD is shut down. L-MFD displays compressed PFD format.

EICAS (OPTIONAL)

The EICAS rotary switch is used to ensure that engine and CAS information are always available to the crew. The switch controls the display of EICAS information on either MFD or both PFDs.

Position — BOTH PFDS

Selects the display configured as a PFD to present EICAS information in a compressed format.

Position — L MFD

Selects the left MFD into a presentation that includes EICAS.

Position — R MFD

The R MFD position selects the right MFD into a presentation that includes EICAS.

When the EICAS switch is set to either the L MFD or R MFD position and the selected MFD fails, EICAS information automatically displays on the cross-side MFD. When either MFD is off, it is recommended that the EICAS switch is set to BOTH PFDS, otherwise EICAS is not displayed.

REVERSION SWITCH PANEL (Cont)

RIGHT DISPLAYS

The right display reversion switch is a three position rotary switch, dedicated to enable the reversion of the right MFD/PFD displays.

Position — MFD REV

R-MFD displays compressed PFD format. R-PFD is shut down.

Position — NORM

R-MFD format is normal. R-PFD is normal.

Position — PFD REV

R-MFD is shut down. R-PFD displays compressed format.

ATTITUDE/HEADING

The attitude/heading reversion switch is a three-position rotary switch.

Position — 1.

All displays present AHRS 1 data.

Position — NORM

The displays present onside AHRS (pilot-1, copilot-2).

Position — 2.

All displays present AHRS 2 data.

AIR DATA

The air data reversion switch is a three-position rotary switch.

Position — 1.

All displays present ADC 1 data.

Position — NORM.

The displays present onside ADC data (pilot-1, copilot-2).

Position — 2.

All displays present ADC 2 data.

TUNE

The tune switch is a four-position rotary switch.

Position — COM 1 121.50

L-VHF com tuned to 121.50 MHz emergency frequency

Position — MFD ONLY

Tuning of the radios by the CDU is disabled, tuning enabled only by MFD.

Position — NORM

Tuning is normal.

Position — CDU ONLY

Tuning of the radios by the MFD is disabled. Tuning is enabled only by CDU.

STANDBY INSTRUMENT

DESCRIPTION

The self-contained standby indicator supplies the pilots with backup attitude, barometric altitude and airspeed indications. The standby instrument receives information from the standby pitot static system.

COMPONENTS AND OPERATION

STANDBY INDICATOR

The indicator supplies the flight crew with displays of aircraft speed, attitude, slip/skid, and glideslope/localizer data as long as 28 vdc power is available.

The localizer and glideslope data come from the VHF navigation receiver 1. The localizer and glideslope pointers and scales are not in view until an ILS frequency is selected.

If the localizer data becomes invalid, a red LOC or GS flag is visible and the pointer, and scale are removed from sight.

ALIGNING FLAG

When the standby instrument is first energized, an ALIGNING flag is visible. From initial application of the 28vdc power, the display requires a maximum of 90 seconds to stabilize, providing aircraft attitude is less than 5°. After aligning, the flag is no longer visible.

STANDBY INSTRUMENT FUNCTIONS

The standby instrument is operated as follows:

- Gyro caging (CAGE)
- Baro-settings (STD)
- Dimming adjustment (BRT and DIM)
- A rotary knob (BARO) is provided to enter the barometric pressure correction.

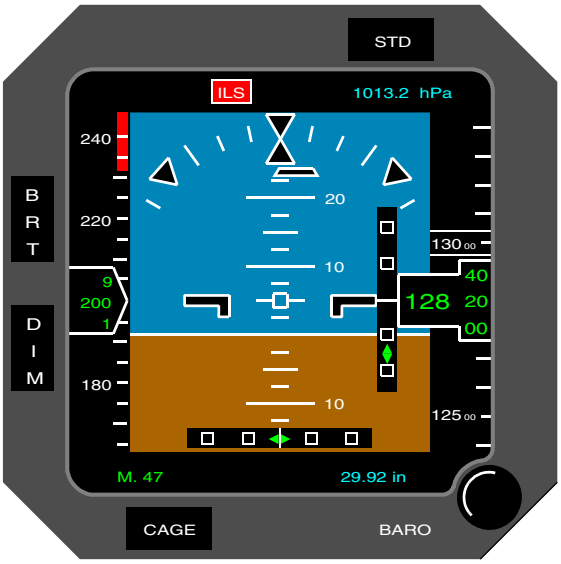

CFO1101002_012

CLOCK/CHRONOMETER

DESCRIPTION

A digital electronic clock/chronometer is installed on the center of the instrument panel just below the standby instrument.

COMPONENTS AND OPERATION

FLIGHT TIME (FLT/RST)

Flight time (FLT) represents the time that the aircraft is “in air” as determined by the status of the in air/on ground discrete input. The FLT starts counting from zero (00:00) when the on-ground/in-air input transitions from ground (on-ground) to open (in-air). The FLT stops counting when the on-ground/in-air input transitions from open (in-air) to ground (on-ground). The FLT resets to 00:00 by pressing the FLT RST switch for a period of 2 or more seconds.

CHRONOGRAPH (CHR)

The chronograph (CHR) begins counting upon depression of the CHR switch. The first switch actuation starts the CHR from zero (00:00). Pressing the switch again stops the CHR timer. Pressing the switch a third time deletes the display and resets the CHR timer.

GPS/MAN MODE

GPS

The chronometer uses external GPS time when the user has selected GPS mode. GPS mode is indicated by an illuminated “GPS” indication on the LCD display.

MAN

The chronometer uses a highly accurate internal time base when the user has selected manual mode. Manual mode is indicated by the absence of the “GPS” indication on the LCD display.

MODE

The mode push button provides two functions. Pressing the mode button will toggle between the UTC (zulu time), LOC (local time) and date displays. By pressing and holding the mode button for more than two seconds, the chronometer will enter the UTC, LOC and date mode.

STANDBY COMPASS

DESCRIPTION

The standby compass supplies the flight crew with the magnetic heading data. This system is in constant operation and is used as an auxiliary display.

COMPONENT AND OPERATION

The standby compass is installed in a bracket on the center post of the windshield, above the flight guidance panel. The compass is aligned with the aircraft longitudinal axis.

The standby compass is a self-contained unit that has a transparent and molded bowl and is filled with silicon fluid. In the fluid is a sphere with a compass dial. Silicone fluid is used to insure free and smooth movement in order to provide an accurate indication. Metal bellows in the compass let the fluid volume expand and contract to changes in temperature and altitude.

The standby compass is lighted and uses a special non-magnetic bulb. The light unit is powered by 5 vdc from the integral light controller.

The compass dial shows markings for the four cardinal heading (N, E, S, W) and has numerals every 30°, with bars every 10°. The last numeral is not shown (for example “24” means “240”). Heading of the aircraft is read against the vertical lubber line.

To operate correctly, the compass needs installation adjustments and also corrections for heading indication errors caused by magnetic interference from the aircraft electrical and avionics system. During the adjustment procedure, the heading reference is supplied by the attitude and heading references system (AHRS).

The standby compass is adjusted in the vertical axis with two adjustment screws that attach the compass to the mounting bracket through two extended holes. At the top of the compass there is an index error adjustment scale. The center major index mark on this scale is used as a reference point during the adjustment procedures.

The standby compass has also two compensators (B and C) installed at the top area of the compass. They are used to adjust the readings for the magnetic interferences.

COMPASS CORRECTION CARD

The standby compass system includes a compass correction card installed on a bracket above the standby compass. The compass correction card has a STEER row used to write the corrected heading for each of the cardinal headings and for the 30° increments.

STANDBY COMPASS (Cont)

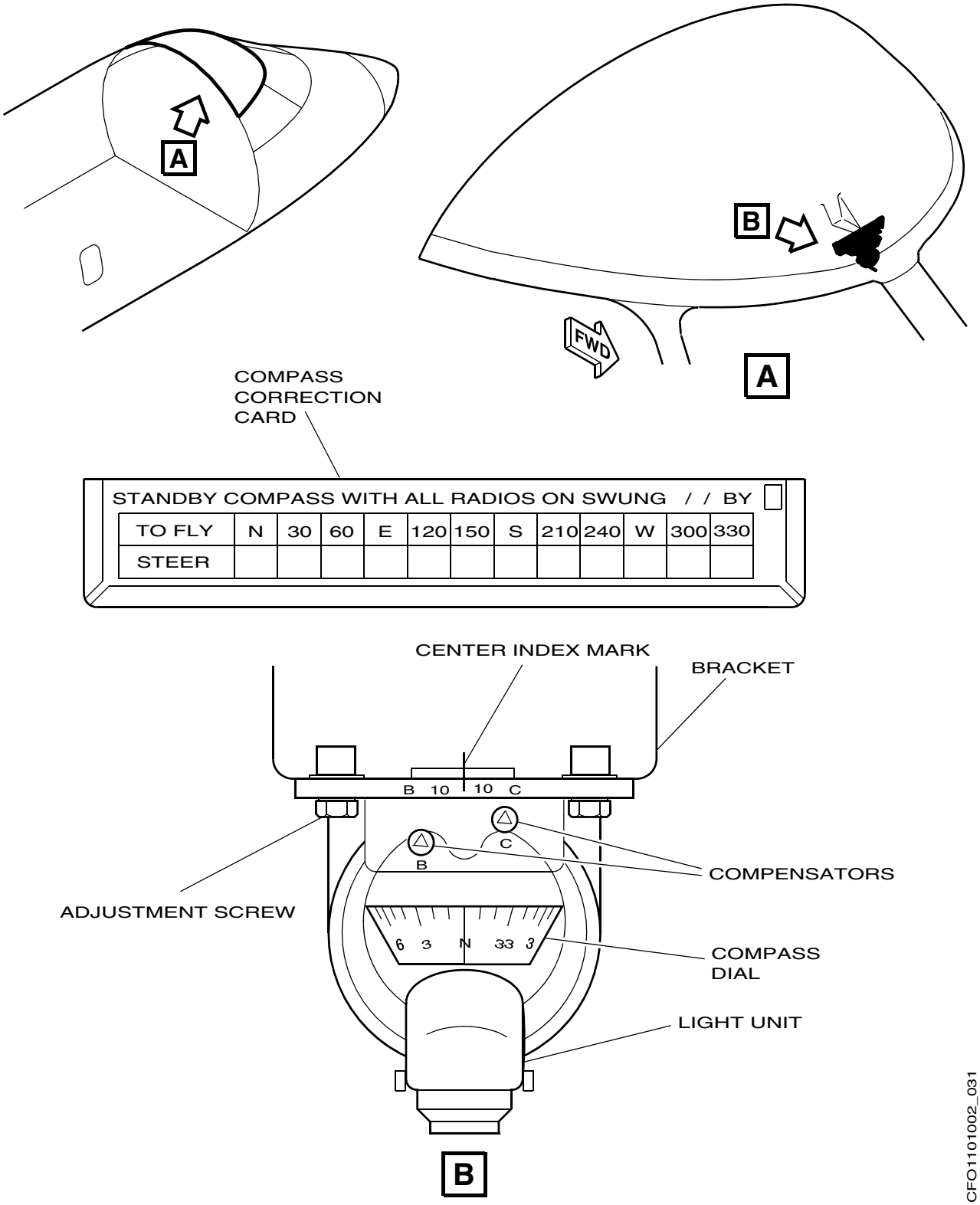

CONTROLS AND INDICATIONS

PRIMARY FLIGHT DISPLAY (PFD)

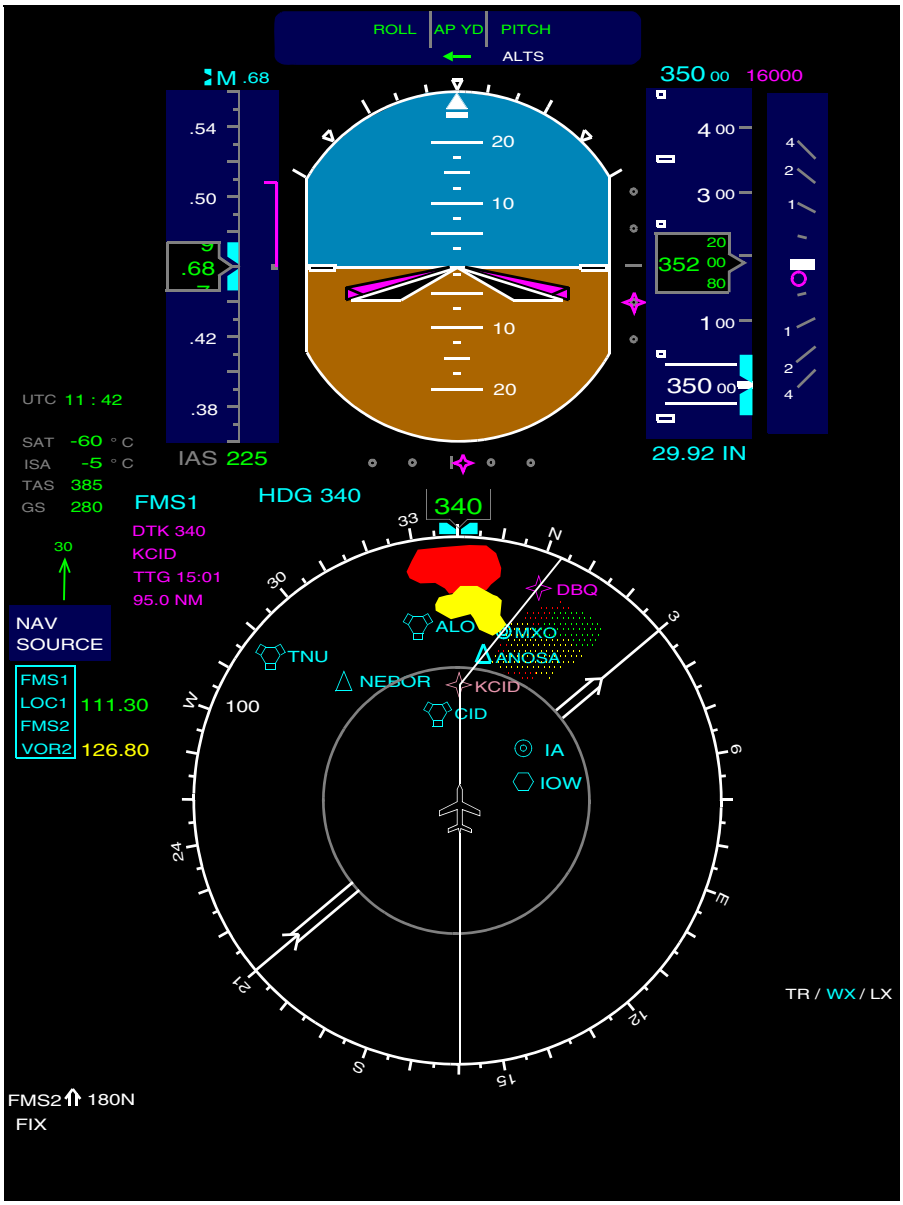

CFO1101002_022

CONTROLS AND INDICATIONS (Cont)

MULTIFUNCTION DISPLAYS (MFD)

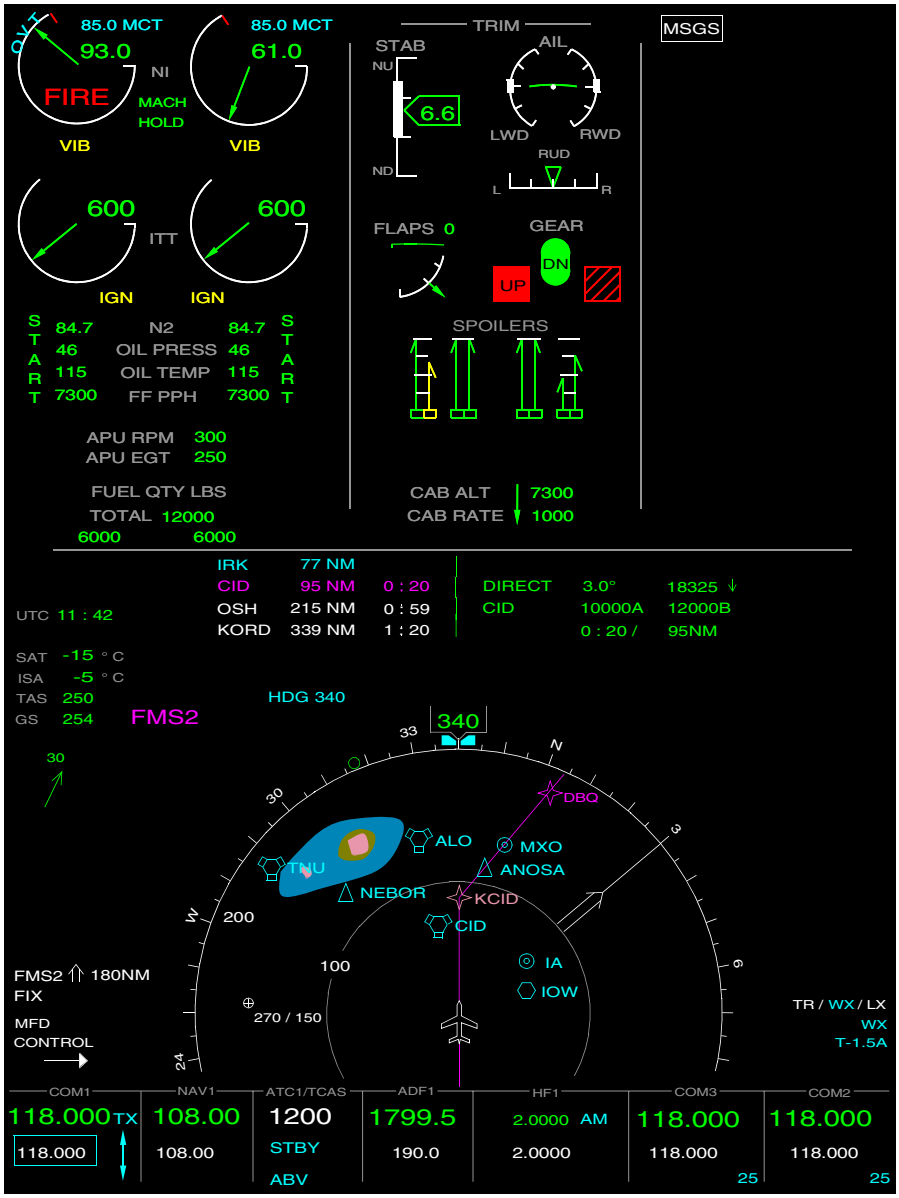

CFO1101002_005

CONTROLS AND INDICATIONS (Cont)

MFD CONTROL PANEL (MCP)

STANDARD

OPTIONAL

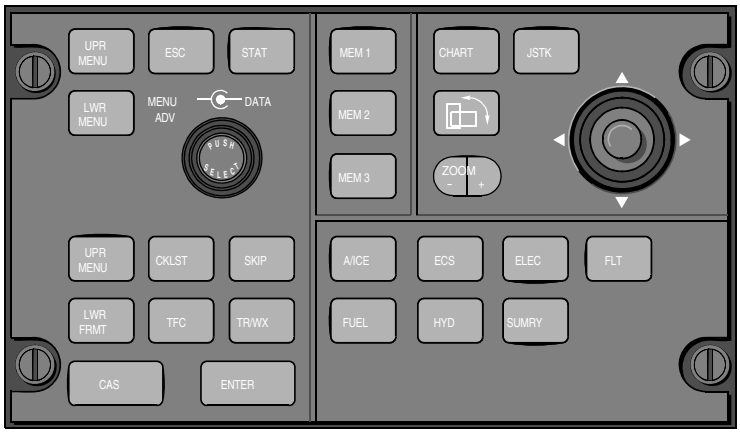

DISPLAY CONTROL PANEL (DCP)

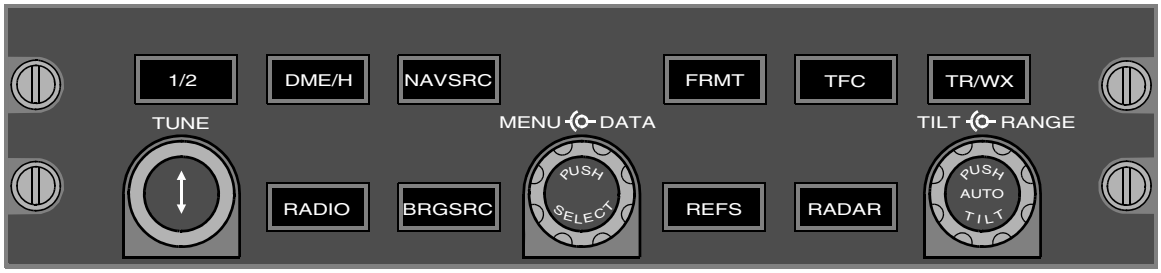

CONTROLS AND INDICATIONS (Cont)

REVERSION SWITCH PANEL

STANDARD

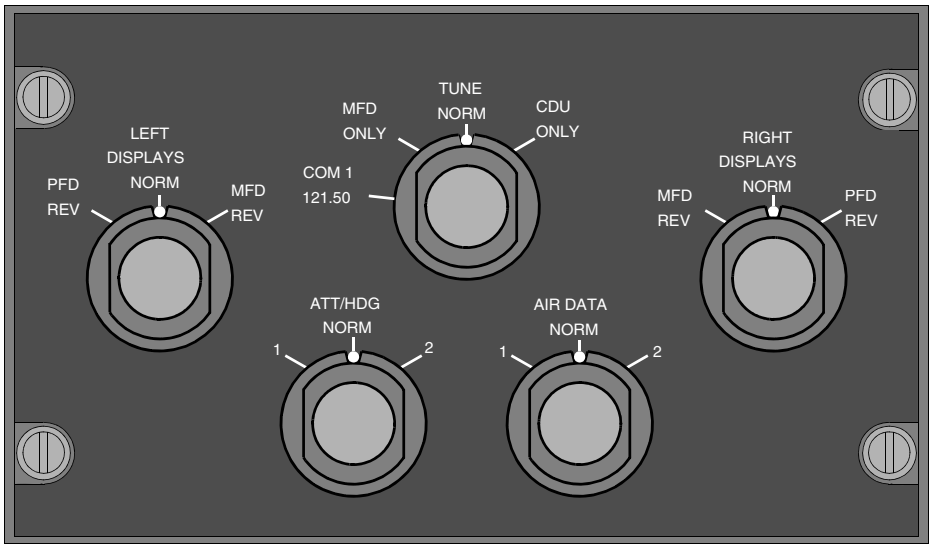

CFO1101002_008

OPTIONAL

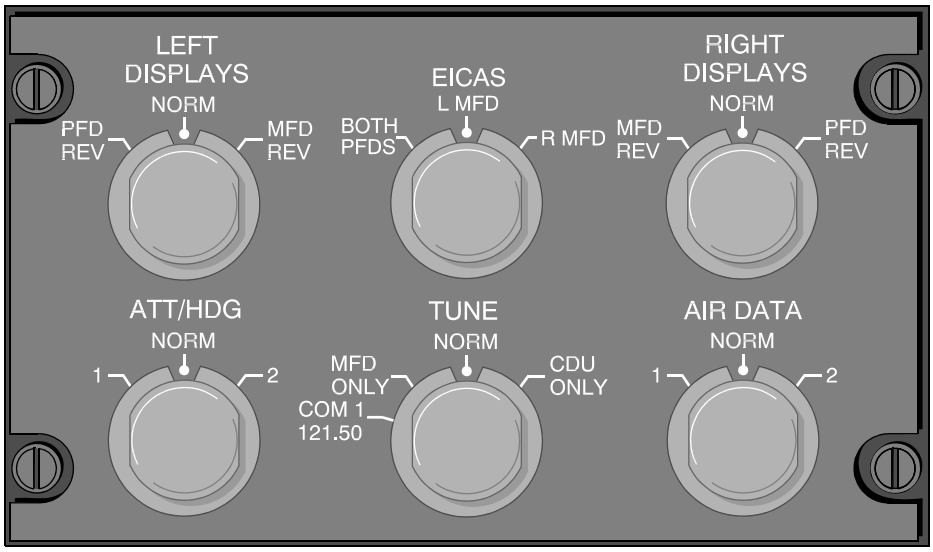

CFO1101002_032

STANDBY INSTRUMENT

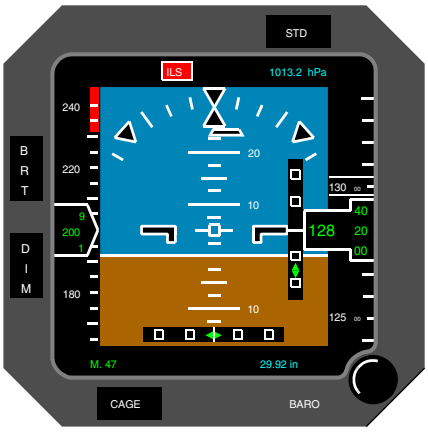

CFO1101002_012

MULTI-FUNCTION/PRIMARY FLIGHT DISPLAY VISUAL ANNUNCIATIONS

If MFD or PFD data is invalid or missing, the following annunciations will be displayed on the MFD or PFD. A brief explanation of each message is provided.

MESSAGE	INHIBITS	MEANING	AURAL WARNING
AOA		A red, boxed, AOA flag shows to the right of the vertical speed scale when no valid AOA data is available. The flag flashes for five seconds, then remains steady	
ALT		Indicates an invalid altitude source. Crosscheck standby instrument altitude to validate instruments	
AP		Indicates a monitored autopilot disconnect	
ATT		Indicates an invalid attitude source and illuminates in the center of the attitude sphere. Most likely cause is an AHRS fault or failure	
FD		Indicates a fault in the flight guidance computer	
FMS 1 FMS 2		Indicates that data from the active nav source is missing or invalid	
LOC 1 LOC 2		Indicates that data from the active nav source is missing or invalid	
VOR 1 VOR 2		Indicates that data from the active nav source is missing or invalid	
HDG		Indicates an invalid heading source and illuminates in the center of the PFD heading display. Most likely cause is an AHRS failure	
IAS		Indicates an invalid air data source and illuminates in the center of the airspeed tape	
MACH		Indicates an invalid air data source and illuminates in the center of the airspeed tape	
RA		Indicates an unreliable radar altitude	
VNV		Indicates when VNAV data from the FMS is missing or invalid	
VS		Indicates in place of the vertical speed scale when vertical speed data from the air data computer is missing or invalid	

EICAS MESSAGES

The flight instruments system messages are shown on the EICAS. In the table below, the EFIS messages and inhibits are listed. A brief explanation of each message is provided.

MESSAGE	INHIBITS	MEANING	AURAL WARNING
AIR DATA 1 (2) FAULT	TO/LAND	The angle of attack input to the ADC has failed. The affected altitude may indicate up to 150 ft low	
EFIS COMPARATOR INOP	TO/LAND	The EFIS comparator is unable to compare one or more of the following parameters: altitude, airspeed, roll attitude, pitch attitude, heading, radio altitude, flight director, localizer or glideslope	
EFIS MISCOMPARE		There is a mismatch between the onside and cross-side data. Accompanied by a PFD annunciation ALT, IAS, ROL, PIT, HDG, LOC, GS, RA or FD	
L IAPS FAIL R IAPS FAIL	TO/LAND	The respective integrated processing system has failed	
PFD X-TALK FAIL	TO/LAND	Communication between the PFDs has failed. REFs menu pages 1, 2 and 3 are not synchro-nized. The EFIS comparator will be inoperative and is unable to compare one or more of the following parameters: altitude, airspeed, roll attitude, pitch attitude, heading, radio altitude, flight director, localizer or glideslope	
CAS MISCOMPARE		There has been a miscompare of Warning, Caution, Advisory, Status, or Aurals for greater than 20 seconds. All current CAS messages will be displayed and aurals sounded	
DCU FAN FAIL	TO/LAND	The avionics data concentrator unit fan has failed	
DCU FAULT	TO/LAND	Channel A or B in the data concentrator unit has failed, the yaw damper may fail. The rudder travel limiter monitoring may be inoperative.	
IAPS FAN FAULT	TO/LAND	The IAPS is indicating an over temperature condition or fan failure. Opening avionics rack doors and/or lowering cabin and cockpit temperatures may aid in cooling	
MFD X-TALK FAIL	TO/LAND	Communication between the MFDs has failed, and cross side tuning will not be available	
RDC FAULT	TO/LAND	Channel A or B of the remote data concentrator has failed with no loss of functionality	

INTRODUCTION

The Collins Pro Line 21 with Integrated Flight Information System (IFIS) for the Bombardier Challenger 300 is a Multi-function Display (MFD) upgrade that adds Electronic Charts (E-Charts), Graphical Weather (GWX), and Enhanced Map Data features to the existing MFD displays. The IFIS is made up of one or two (optionally) File Server Units (FSU), two Multifunction Controls and two MFDs. The FSU provides the processing and storage for all IFIS functions including E-Charts, Enhanced Maps, and GWX.

INTEGRATED FLIGHT INFORMATION SYSTEM (IFIS) BLOCK DIAGRAM

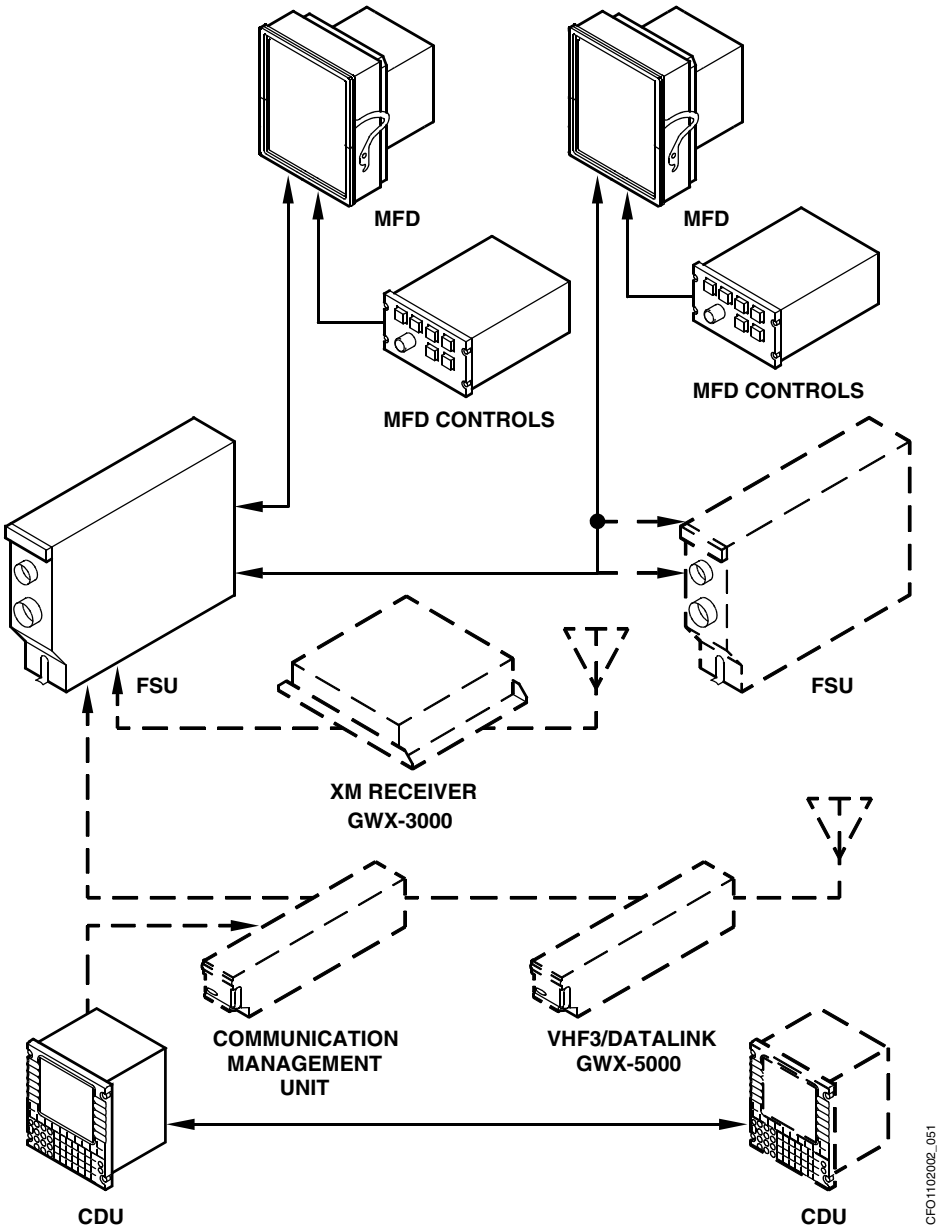

ELECTRONIC CHARTS (OPTIONAL)

MFD E-CHARTS

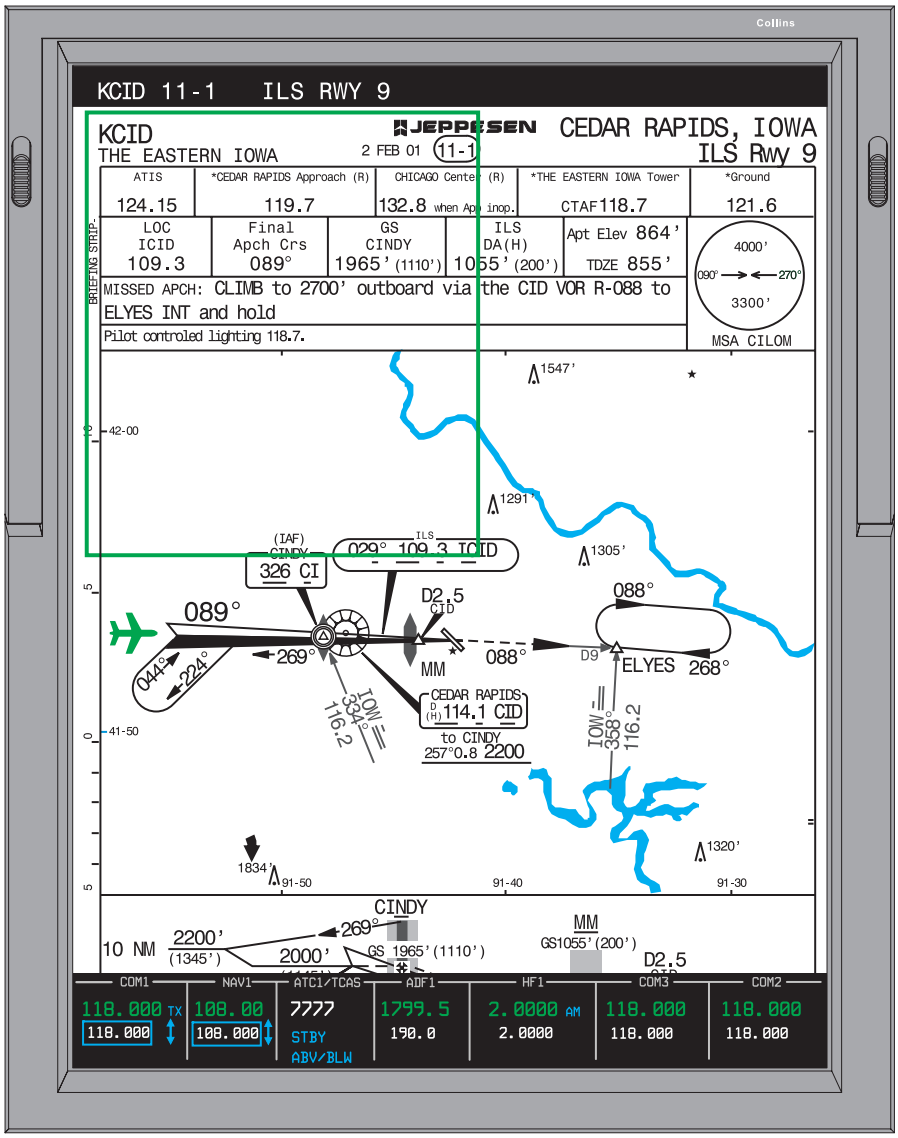

The optional electronic chart (E-Chart) format provides the ability to display an electronic version of a conventional paper instrument chart on the MFD. The E-Charts are selected by the FMS when a flight plan is entered, or they may be selected manually by the pilot. Loss of the on-side FMS data is evident by the unavailability of an automatic fill-in of origin, destination and alternate airport on the E-Chart selection menu. Selecting the off-side FMS as the NAV source can restore the automatic fill-in of the menu.

MFD controls are used to select a chart for display, pan around the chart, zoom in or out on the chart, and also change the orientation of the chart.

When aircraft position is available, a moving aircraft symbol is displayed on E-Charts that are geographically referenced. A crossed-out aircraft symbol is displayed above the chart to indicate when the aircraft position cannot be displayed on the chart. The symbol is displayed in yellow when a geographically-referenced chart is in view and GPS present position data is not available. The symbol is displayed as a green aircraft with a white circle/slash when the chart in view is not geographically-referenced. The moving aircraft symbol displays the current aircraft position latitude and longitude as determined by the same side Global Positioning System (GPS).

(Continued)

ELECTRONIC CHARTS (OPTIONAL) (Cont)

GEO-REFERENCED
NO GPS PPOS DATA

NOT GEO-REFERENCED

The nose of the aircraft symbol is oriented toward the aircraft true heading. When the same side GPS data is absent or invalid, the opposite side GPS is used. The databases associated with E-charts must be loaded into the File Server Unit (FSU) before the system is functional.

Early/late cycle chart messages are displayed in the chart status field to the right of the chart name. The message displayed will be one of the following in order of priority:

- OUT OF DATE
- CHECK DATE

The CHECK DATE message may appear for a short period of time while the GPS tries to acquire satellites. If satellites are not in view (i.e., while the aircraft is in a hanger), the CHECK DATE message may persist and the system will be unable to automatically check for database effectivity.

When a new chart is selected, the orientation is set to default (portrait or landscape) as determined from the Jeppesen database. The first push of the orientation button, located below the CHART button on the MFD control panel rotates the chart 90°. The second push rotates the chart back to its original orientation.

When a new chart is selected, the chart is initially scaled such that the width of the chart fills the display. Operate the joystick to move the pan/zoom window to the area of the chart to be viewed. The zoom feature is operated by a rocker switch with + and - markings. Pushing the + expands the view, pushing the - returns the chart to the normal scaling.

When zoomed in, use the joystick to move the desired area of the chart into view on the MFD. Moving the joystick in the horizontal moves the pan/zoom window horizontally. Moving the joystick in the vertical axis moves the pan/zoom window vertically.

The following fault messages may be displayed on the MFD when an E-chart is in view:

- OUT OF DATE
- CHECK DATE
- CHART FAULT

The menus are divided into the following areas:

- Chart Main Index
- Chart Type Menu
- Chart List.

ELECTRONIC CHARTS (OPTIONAL) (Cont)

CHART MAIN INDEX

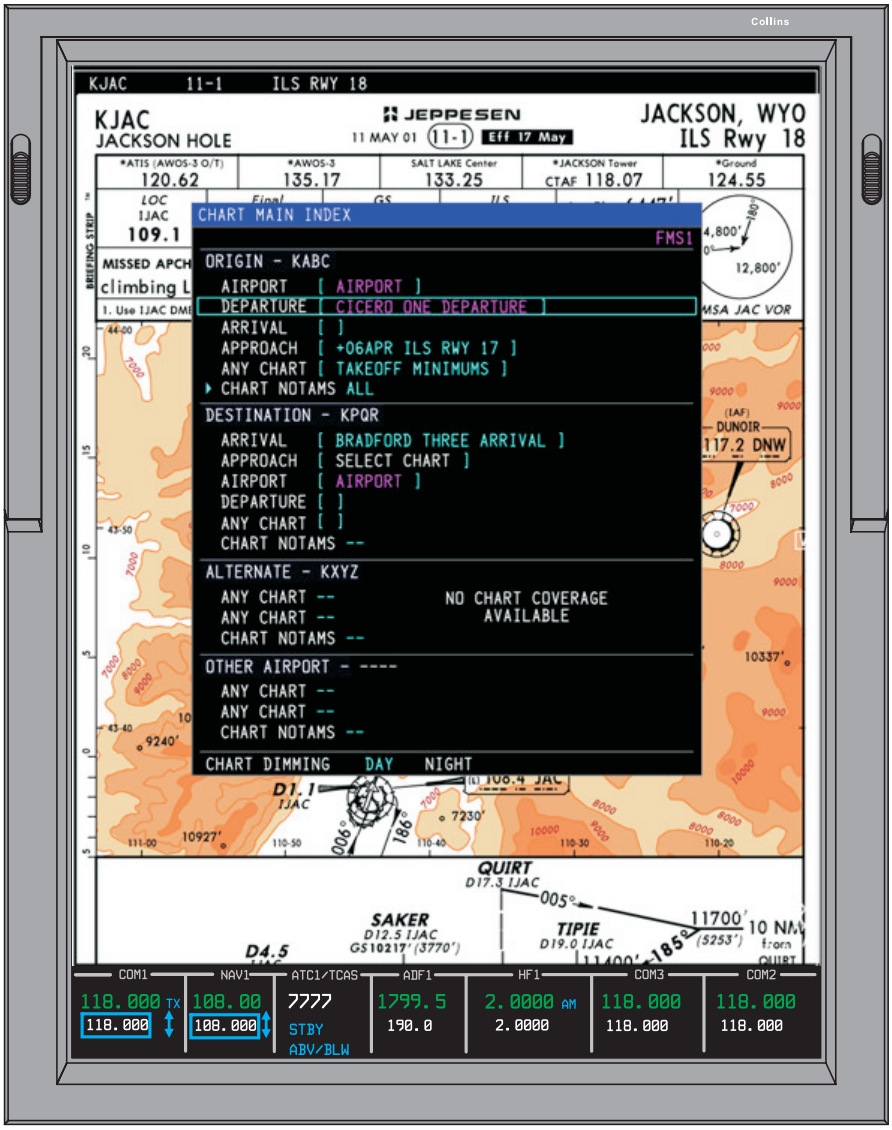

The Chart Main Index shows the list of shortcuts to the charts needed for the instrument procedures associated with the origin, destination, and alternate airport. Select one of the shortcuts to display the associated chart. The origin, destination, and alternate airport entries are supplied by the FMS when a flight plan is entered. The Other Airport entry is always entered by the pilot on this menu. To display the Chart Main Index, do either of the following steps:

1. With an E-Chart displayed, push the UPR or LWR MENU button on the MFD control.
2. If the Chart Type, Chart List, or NOTAM menu is in view, push the ESC button on the MFD control.

(Continued)

ELECTRONIC CHARTS (OPTIONAL) (Cont)

OTHER AIRPORT

To search for any other airport not listed on the Chart Main Index, position the menu cursor around the OTHER AIRPORT field.

1. Turn the MENU ADV knob on the MFD control to position the menu cursor around the OTHER AIRPORT field.
2. Push the PUSH SELECT button to activate the text entry cursor and to position the cursor around the first character of the entry field.
3. Turn the DATA knob on the MFD control to change the character. Rotate clockwise to advance the character field. Counterclockwise to decrease the character field.
4. Turn the MENU ADV knob to move the cursor to the next character field. Clockwise to move the cursor to the next character on the right. Counterclockwise to move the cursor to the left.Repeat the steps 3 and 4 to enter the four letter ICAO airport identifier.
5. Do either of the following steps to end the data entry mode:
   a. Push the PUSH SELECT button on the MFD control to finish entering the airport ID and to have the information processed.
   b. Push the ESC button to cancel data entry mode and to restore the previous value.

DISPLAY SELECTED CHART

1. With the Chart Main Index in view, turn the MENU ADV knob to position the menu cursor around the desired shortcut control.
2. Push the PUSH SELECT button momentarily.

SHORTCUT CONTROLS

Shortcut controls are displayed below the origin, destination, alternate, and other airport fields/airport IDs on the Chart Main Index. The shortcut controls identify the selected chart and provide a quick means of selecting the indicated chart.

CHANGE SHORTCUT

The change shortcut action allows the pilot to change an existing shortcut or fill a blank shortcut. A submenu is displayed when a change shortcut action is activated. The submenu contains a list of shortcut items that can be selected. Submenus may also be accessed from this menu.

1. Turn the MENU ADV knob to position the menu cursor around the desired shortcut.
2. If the shortcut text field does not contain a shortcut, push and release the PUSH SELECT button. If the shortcut text field contains a shortcut, push and hold the PUSH SELECT button for more than 1 second.

The change shortcut action is completed when a shortcut item is selected from one of the submenus. When the change shortcut action is completed, the submenus are closed and the selected shortcut item shows in the shortcut text field.

CANCEL CHANGE SHORTCUT

The change shortcut action may be canceled. When the change shortcut action is canceled, the last selected shortcut item shows in the shortcut text field, or the shortcut text field is blank if no shortcut item had been previously selected.

Select one of the following steps to cancel the Change Shortcut:

1. Push the ESC button to navigate back to the previous menu.
2. Push the MENU button to close all menus.
3. Make another control selection (removes the current chart format).

SET DAY OR NIGHT DIMMING

1. Turn the MENU ADV knob on the MFD control to position the menu cursor around the CHART DIMMING line item.
2. Turn the DATA knob on the MFD control.

EXIT CHART MAIN INDEX

1. Push the UPR or LWR MENU or ESC button on the MFD control to exit the Chart Main Index and show the E-Chart that was previously in view.

ELECTRONIC CHARTS (OPTIONAL) (Cont)

To display a chart manually, follow either the Chart List Off or the Chart List On checklist.

CHART LIST OFF

1. Push the CHART button on the MFD control to show the last displayed chart.
2. Turn the DATA knob on the MFD control to cycle through the list of linked charts associated with the airport identified on the displayed chart.

CHART LIST ON

1. Push the UPR or LWR MENU button on the MFD control to show the Chart Main Index.
2. Turn the MENU ADV knob to position the menu cursor around the desired chart.

Push the PUSH SELECT button to select the chart for display.

ELECTRONIC CHARTS (OPTIONAL) (Cont)

CHART TYPE MENU

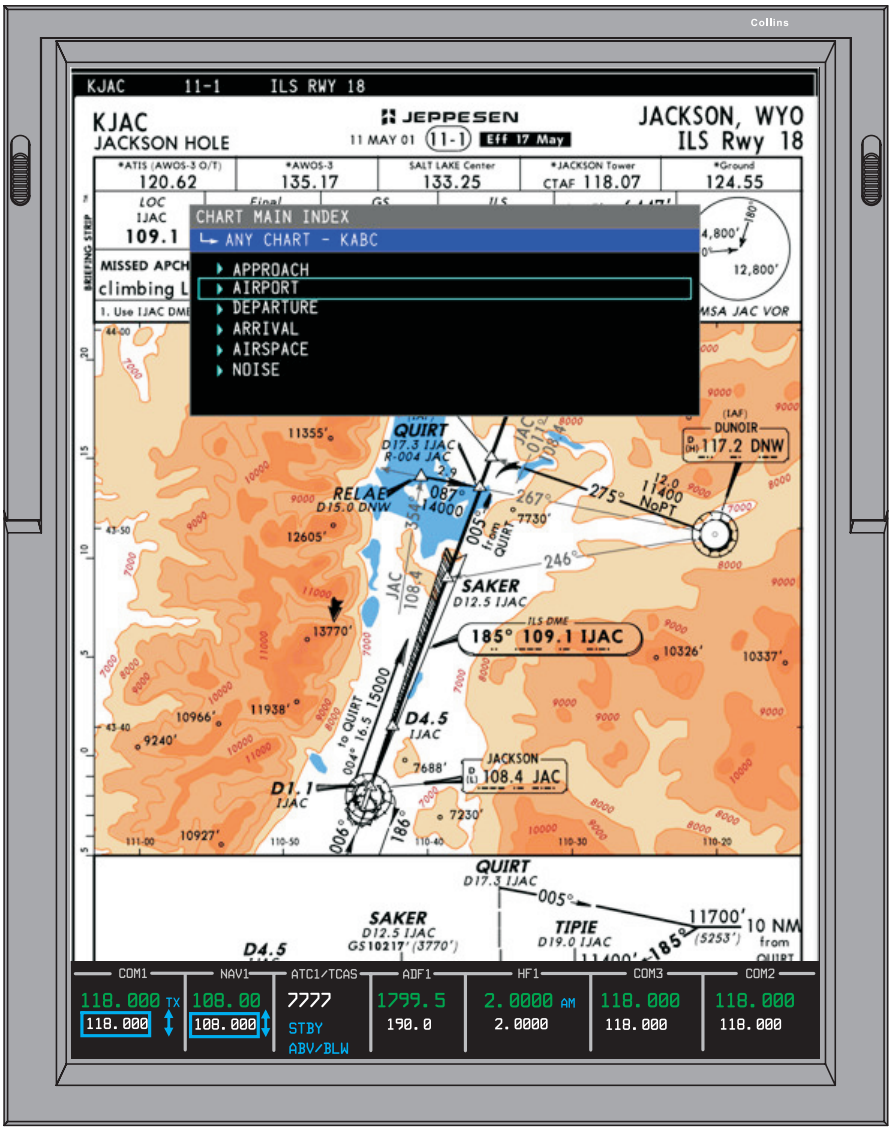

The Chart Type menu is accessed via the ANY CHART selection on the Chart Main Index. The Chart Type menu shows a list of the chart types available for the selected airport.The possible selections are as follows:

- Approach
- Airport
- Departure
- Arrival
- Airspace
- Noise

SELECT CHART TYPE

1. Turn the MENU ADV knob on the MFD control to position the menu cursor around the desired chart type. The available chart types are Approach, Airport, Departure, Airspace, Arrival, and Noise.
2. Push the PUSH SELECT button on the MFD control to select the chart type.

(Continued)

ELECTRONIC CHARTS (OPTIONAL) (Cont)

EXIT CHART TYPE

To exit the chart type menu, do either of the following steps:

1. Push the UPR or LWR MENU button on the MFD control to show the chart that was previously in view.
2. Push the ESC button on the MFD control to show the Chart Main Index.

CHART LIST

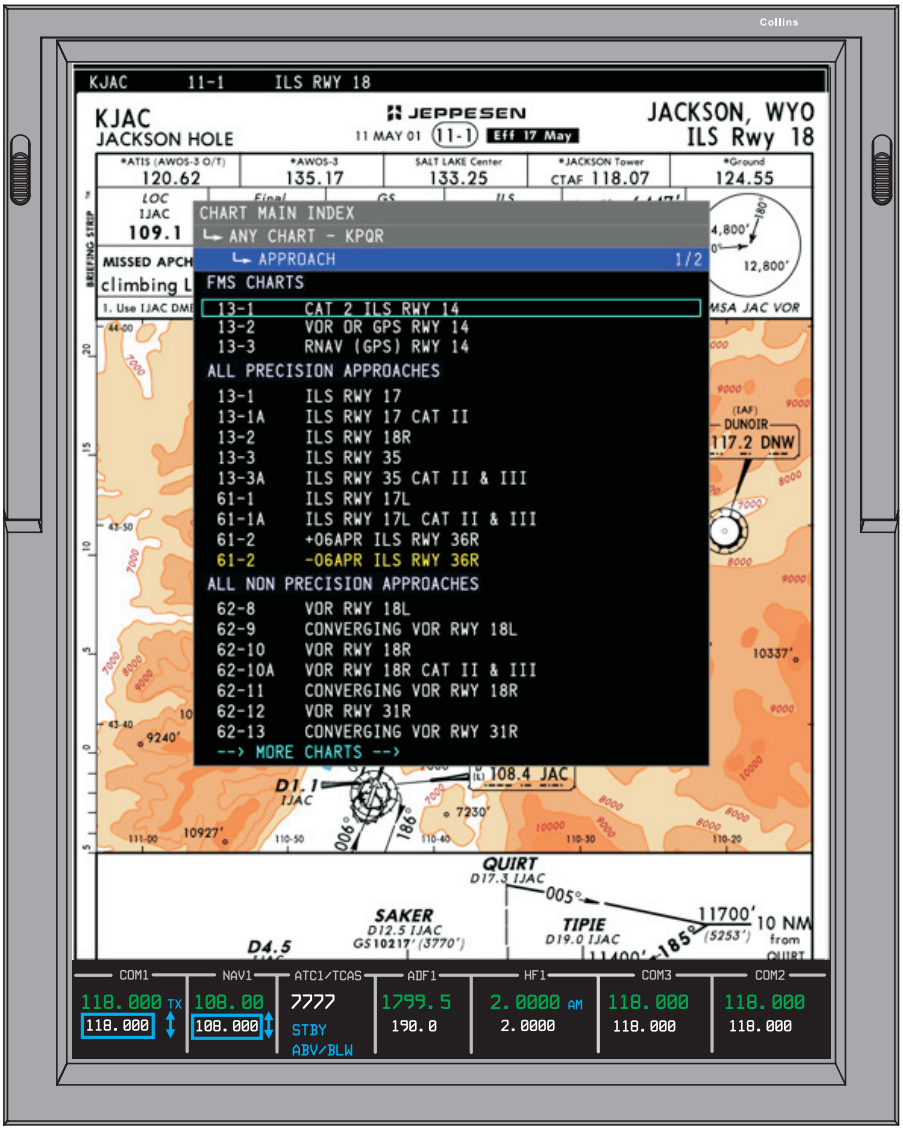

The Chart List is accessed via the Display Chart, Chart Main Index or Chart Type menus. The Chart List shows a list of charts of the selected type (i.e. approach) for the selected airport. When a chart is selected, the associated shortcut on the Chart Main index is updated to the new selection. Jeppesen allows for charts to be updated midway through the effective dates of a database. Under these conditions, the database will contain additional charts that become effective on a given date. A chart in the list is displayed in white if the effectivity date indicates that it is a current chart. An item in the list is displayed in yellow when its effectivity date indicates that it is not current. The switch over time for Jeppesen E-charts is 09:01 UTC. When the current UTC is earlier than 09:01 of the chart begin date, or later than 09:01 of the chart end date, the chart is considered noncurrent. A chart is considered not current when one of the following occurs:

- There is a new chart and its effectivity date has not yet occurred.
- The chart is to be deleted and its effectivity date has passed
- The chart is the early cycle of a mid-cycle revision and the current date/time is the late cycle of the database.

(Continued)

ELECTRONIC CHARTS (OPTIONAL) (Cont)

The chart is the late cycle of a mid-cycle revision and the current date/time is the early cycle of the database.Select an item from the list and the Chart List menu will be displayed. The Chart List menu shows a list of the charts that are available of the selected type (i.e. Approach) for the selected airport.

1. Turn the MENU ADV knob on the MFD control to position the menu cursor around the ANY CHART shortcut for the desired ORIGIN, DESTINATION, ALTERNATE, or OTHER AIRPORT.
2. Push and hold the PUSH SELECT button on the MFD control to select the Chart Type menu.

VIA DISPLAY CHART

A chart must be displayed on the MFD.

1. With an E-chart in view, push the PUSH SELECT button on the MFD control to display the Chart List.

VIA CHART MAIN INDEX

The Chart Main Index should be displayed on the MFD

1. Turn the MENU ADV knob on the MFD control to position the menu cursor around the desired chart type (i.e. Departure) for the origin or destination airport.
2. Push and hold the PUSH SELECT button on the MFD control.

VIA CHART TYPE MENU

The Chart Type menu should be displayed on the MFD.

1. Turn the MENU ADV knob on the MFD control to position the menu cursor around the desired chart type (i.e. Departure).
2. Push the PUSH SELECT button on the MFD control.

SELECT A CHART FROM THE CHART LIST

Selecting a chart displays the chart on the MFD and updates the associated shortcut control on the Chart Main Index.

1. Turn the MENU ADV knob on the MFD control to position the menu cursor around the desired chart.
2. Push the PUSH SELECT button on the MFD control to select the chart.

EXIT CHART LIST

1. Push the UPR or LWR MENU or ESC button on the MFD control to exit the Chart List and show the chart previously in view.

ELECTRONIC CHARTS (OPTIONAL) (Cont)

CHART NOTAMS MENU DISPLAY

(Continued)

ELECTRONIC CHARTS (OPTIONAL) (Cont)

CHART NOTAMS MENU

The NOTAMS menu is accessed from the Chart Main Index. The CHART NOTAMS menu displays the NOTAMS available for the selected airport. The page is broken into two fields, the NOTAM summary and NOTAM details. When more than one NOTAM is available for the selected airport, the selected NOTAM and total number of NOTAMs show in the summary field. The selected NOTAM readout is also a data entry field that allows the user to select another NOTAM for viewing. The NOTAM type, effectivity, begin date and end date is displayed in the summary field.

When there are temporary changes to narrate or terminal charts, these changes are included in Jeppesen char NOTAMS. The chart NOTAMS are sometimes used for last minute changes that missed the cutoff dates. These NOTAMS are usually produced every two weeks. It is important to note that the Chart NOTAMS only highlight changes to the Jeppesen charts and do not substitute for the NOTAMS issued by the FAA.

New NOTAMS can be issued at any time by the FAA. These new NOTAMS may not be in the database installed in the FSU until the next database update. Prior to departure, always ensure the latest NOTAMS are available either by requesting them using the onboard datalink or as hard copy.

When more than one NOTAM is available for the selected airport, the number of available NOTAMS is displayed next to NOTAM legend. The first number is the selected NOTAM and the second number is the total number of NOTAMs for this airport. The NOTAMs are listed in the order that follows:

1. By type: Terminal NOTAMs first, then General.
2. By effectivity: Permanent NOTAMS first, then Temporary.

Follow the steps below to access the CHART NOTAMS shortcut:

1. When the Chart Main Index is displayed, turn the MENU ADV knob on the MFD control to position the menu cursor around the CHART NOTAMS shortcut for the desired airport (i.e. origin, destination, alternate, or other airport).
2. Push the PUSH SELECT button on the MFD control.

SELECT A NOTAM

1. Turn the DATA knob on the MFD control to select the desired NOTAM.
2. If the NOTAM exceeds the available space in the NOTAM Details field, the NOTAM shows over multiple pages. To page up or down:
   a. Turn the MENU ADV knob on the MFD control to position the cursor window around the NOTAM page number.
   b. Turn the DATA knob clockwise to increase the page number; counterclockwise to decrease the page number.

EXIT NOTAMS PAGE

1. To exit from the NOTAMS page, use one of the following steps:
   a. Push the ESC button on the MFD control to exit the NOTAM page and show the Chart Main Index.
   b. Push the UPR or LWR MENU button on the MFD control to exit the NOTAM page and show the Display Chart format.

GRAPHICAL WEATHER (OPTIONAL)

The Challenger 300 may be equipped with either the optional GWX-5000 or GWX-3000 Graphical Weather system. Weather images for the GWX-5000 are uplinked via a VHF datalink system from the Information Service Provider (Universal Weather). Weather images for the GWX-3000 are provided via a satellite Information Service Provider (XM Satellite Weather Service).

To determine which version of Graphical Weather is installed, Push the STAT button on the MFD Control panel to display the STATUS page on the MFD. Push the UPR or LWR MENU on the MFD control and select FILE SERVER CONFIGURATION from the list of menus to display the FSU CONFIGURATION. The XM weather installation is designated GWX-3000 and Universal Weather GWX-5000.

GRAPHICAL WEATHER (GWX-5000)

The GWX-5000 function allows the pilot to view graphical weather images one at a time on the MFD. New and saved GWX images are requested by the pilot via controls on the MFD control panel. The GWX image can be a forecast or observation image. Forecast images include WINDS ALOFT, ICING, and TURBULENCE. Observation images include NEXRAD, TOPS/MOVEMENT, and Weather (WX) depiction. Each datalinked GWX image is paired with a corresponding geopolitical background image. A title/time banner is displayed for each GWX image. The NEXRAD precipitation image is the only image available as an overlay on the Plan Map format.

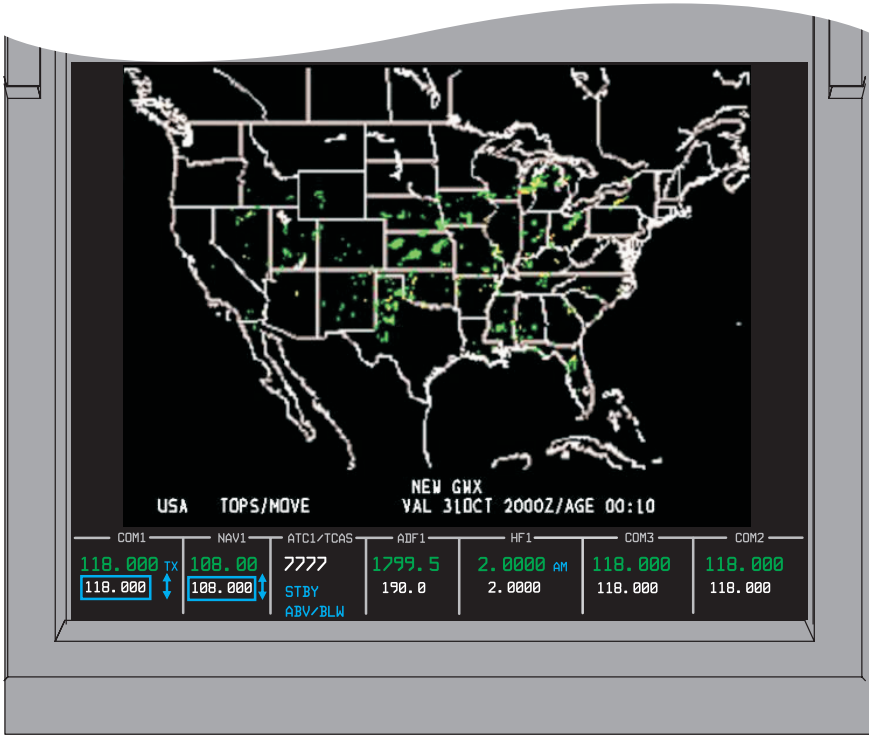

Occasionally, the National Weather Service incorrectly identifies test data that exhibits unrealistic weather patterns. Examples are:

1. Pie-slice shaped pattern.
2. Circle-shaped pattern.
3. Bulls-eye shaped pattern.

When an image of this nature is encountered and you suspect the data is in error, wait until the next image update cycle, request a new image, and verify the test pattern is removed.

GRAPHICAL WEATHER (OPTIONAL) (Cont)

GWX IMAGE LIST

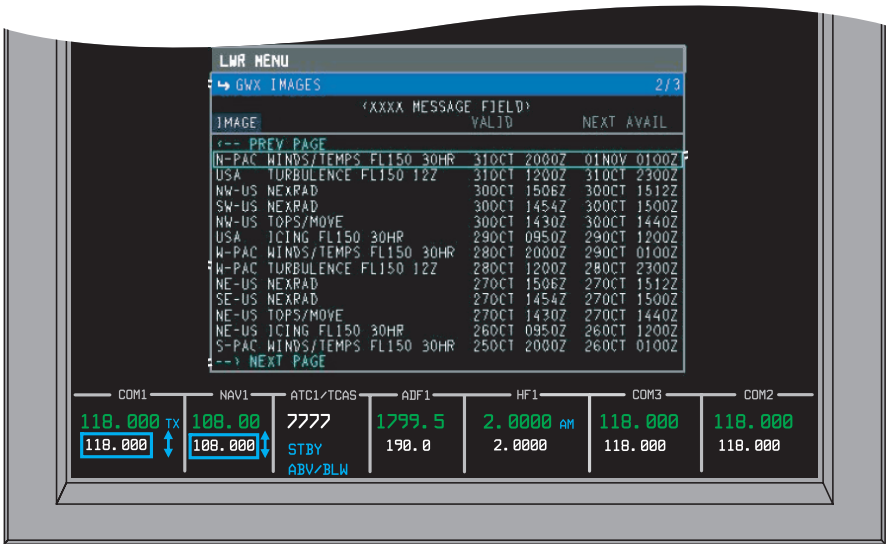

The select GWX image function allows the pilot to select from a list of available images to be displayed on the MFD. The image can be displayed by selecting either the UPR or LWR FMT button. The GWX format must be selected on the MFD first. After selecting GWX format the following images will be available:

- NEXRAD
- TOPS/MOVEMENT
- WINDS ALOFT
- ICING
- WX DEPICTION
- TURBULENCE

The following messages may be displayed on the MFD when the GWX format is active:

- GWX FAULT
- SUBSCRIPTION EXPIRED
- NOT RECEIVING DATA
- SIGMET OVERLAY INCOMPLETE - CHECK TEXT

DISPLAY LAST GWX IMAGE

The display last GWX image function allows the pilot to select the GWX display format with the last viewed GWX image displayed on the MFD.

The display last GWX image function steps are as follows:

1. Push the UPR or LWR FRMT button on the MFD control to display the lower display FORMAT list.
2. Push the UPR or LWR FRMT button as necessary to cycle the display to the next available format until GWX is selected. The GWX image displayed on the MFD is the last viewed GWX image.

New graphical weather images can be added to the list via the CDU. When the system receives a new image, the text message NEW GWX is displayed on the MFD. The message is cleared by entry into the image list. The newest image to be received is displayed at the top of the list. The CDU also displays the message RCVD just beside the requested image. As long as images in the entry list have not been viewed, the message RCVD continues to be displayed on the CDU.

(Continued)

GRAPHICAL WEATHER (OPTIONAL) (Cont)

SELECT NEW GWX IMAGE

A new GWX image function steps are as follows:

1. Push the UPR or LWR FRMT button on the MFD control to select the upper or lower display FORMAT list.
2. Push the UPR or LWR FRMT button as necessary to cycle the display to the next available format until GWX is selected. The GWX image displayed on the MFD is the last displayed GWX image.
3. Push the UPR or LWR MENU button on the MFD control to display the list of available GWX images.
4. Turn the MENU ADV knob on the MFD control to position the menu cursor around the desired list item. Turning the knob clockwise moves the cursor down the page; counterclockwise moves the cursor up the page.
   a. If needed, turn the MENU ADV knob on the MFD control to position the menu cursor around the NEXT PAGE or PREVIOUS PAGE control.
   b. Push the PUSH SELECT button on the MFD control to display the next or previous page with the list of available images.
   c. Push the PUSH SELECT button the MFD control to select the highlighted list item.

For each GWX image on the list, a region abbreviation, name of the image, date, month and time of the image is displayed. The date, month, and time of the next available image for each image is also displayed. New graphical weather images can be added to the list via the CDU REQ GWX page. The newest image to be received is displayed at the top of the list. The list holds a maximum of 50 items. The oldest item is removed from the list as new items are added.

The GWX region name and region abbreviations are as follows:

GWX Abbreviation	Region Description
AFR	Africa
AUS	Australia
EUR	Europe
INDIA	India
N-AM	North America
N-ATL	North Atlantic
N-PAC	North Pacific
S-AM	South America
S-PAC	South Pacific
W-PAC	West Pacific
UK	United Kingdom
NC-US	North Central United States
NE-US	Northeast United States
NW-US	Northwest United States
SC-US	South Central United States
SE-US	Southeast United States
SW-US	Souththwest United States
USA	United States

Each datalinked GWX image is paired with a corresponding geopolitical background image. The geopolitical background images shows geographic and political borders. The borders are displayed in white with a black background.

(Continued)

GRAPHICAL WEATHER (OPTIONAL) (Cont)

New images are available according to the schedule listed below:

Image Type	Schedule
NEXRAD	Every 6 minutes.
Echo/Tops Movement	Every 30 minutes (Typically at 10 and 40 minutes past the hour).
WX Depiction	Every 60 minutes (Typically at 20 minutes after the hour).
Winds Aloft	0Z, 6Z, 12Z, 18Z, 30 hr, 36 hr, 42 hr, 48 hr, 72 hr.
Turbulence	0Z, 6Z, 12Z, 18Z, 30 hr, 36 hr, 42 hr, 48 hr, 72 hr.
Icing	0Z, 6Z, 12Z, 18Z, 30 hr, 36 hr, 42 hr, 48 hr, 72 hr.

The Zulu (Z) forecast times refer to that time in the future for weather forecasts. Therefore, if the current time is 15Z, an 18Z is for 18Z today and a 12Z forecast is for 12Z tomorrow. The hr forecast times refer to the number of hours since the last model run for weather forecasts. The model runs are completed at 0Z and 12Z each day. Therefore, if the current time is 15Z, a 30 hr forecast is for 18Z tomorrow (i.e. 30 hour from the last model run, which is 12Z today).

NEXRAD IMAGE

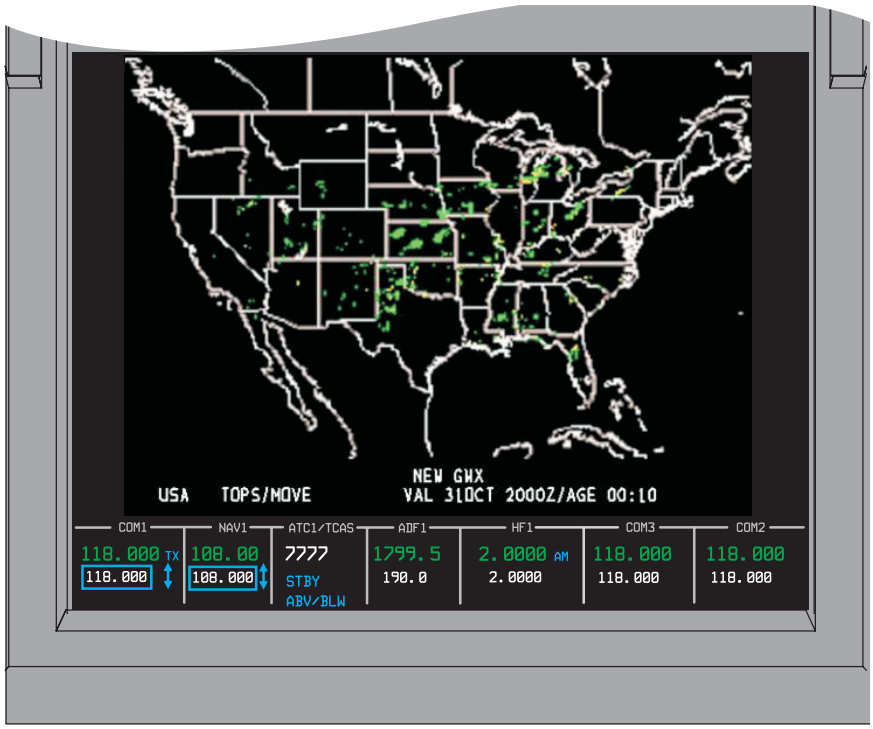

A NEXRAD image is in view on the lower or upper display area of the MFD when selected from the GWX image list and the GWX format is active. The intensity of snow and rain are displayed using the same color coding. The following table lists the colors used on NEXRAD images to represent areas of precipitation and the relative intensity:

Precipitation Intensity	Color
20 ≤ dBZ < 30	Green
30 ≤ dBZ < 40	Yellow
dBZ ≥ 40	Red

GRAPHICAL WEATHER (OPTIONAL) (Cont)

TOPS/MOVEMENT IMAGE

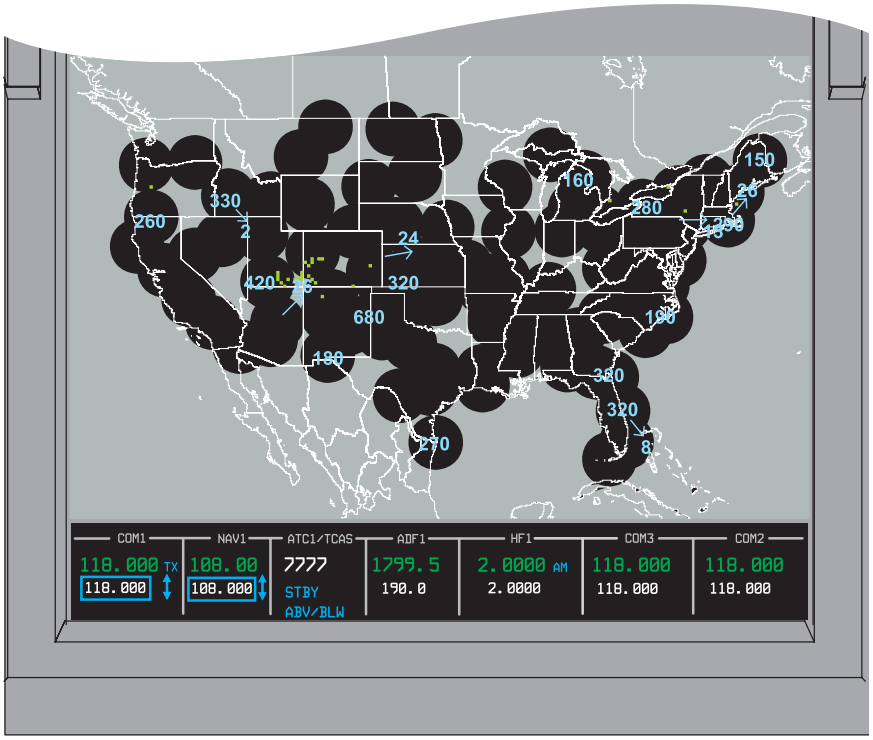

A TOPS/MOVEMENT image is displayed on the lower display area of the MFD when selected from the GWX image list and the GWX format is active.

Precipitation symbology, echo tops, and cell movement information is displayed on TOPS/MOVEMENT images. Echo tops and cell movement is shown for major storm cells. The altitude of the radar tops in hundreds of feet is shown in blue centered over the storm cell. When more than one storm type is indicated for a single storm cell, only the most severe type is displayed. For storm cells with measurable ground speed, a track arrow is drawn from the center point of the storm cell out in the direction of the true track of the cell. A ground speed readout in knots is displayed at the end of the track arrow.

Occasionally, the National Weather Service incorrectly identifies test data that exhibits unrealistic weather patterns. Examples are donut-shaped patterns, pie-sliced shaped pattern, circle-shaped pattern, and bull-eye shaped pattern. when an image of this nature is encountered and you suspect the data is in error, wait until the next image update cycle, request a new image, and verify the test pattern is removed.

350

ALTITUDE ONLY

350

8

ALTITUDE TRUE TRACK SPEED IN KTS.

The following table lists the colors used on TOPS/MOVEMENTS images to represent areas of precipitation and the relative intensity:

Precipitation Intensity	Color
20 ≤ dBZ < 30	Green
30 ≤ dBZ < 40	Yellow
dBZ ≥ 40	Red

GRAPHICAL WEATHER (OPTIONAL) (Cont)

WX DEPICTION IMAGE

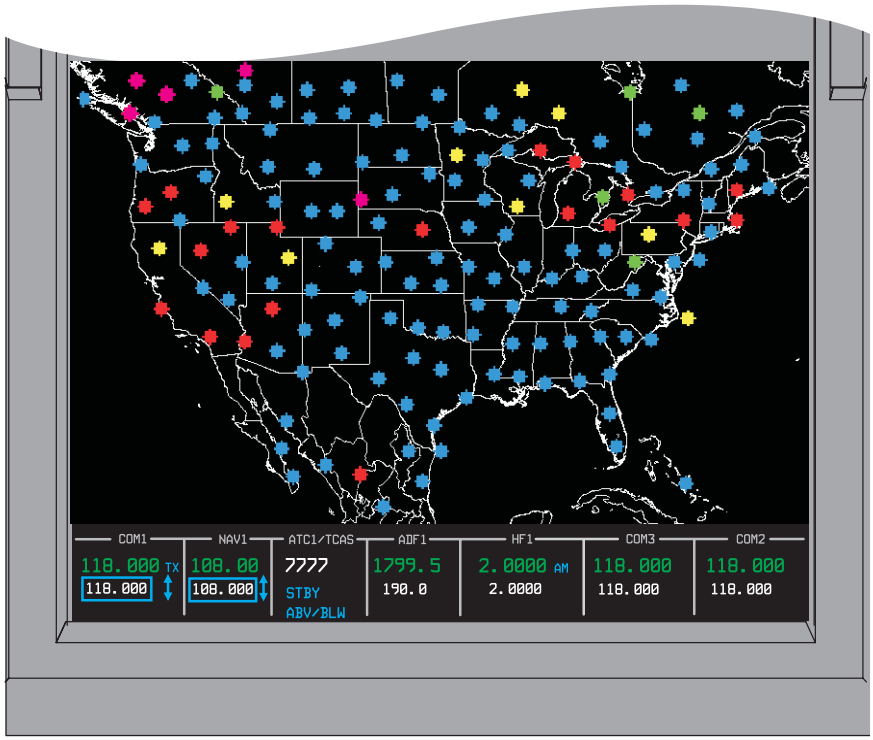

A WX DEPICTION image is in view on the lower display area of the MFD when selected from the GWX image list and the GWX format is active. The WX DEPICTION chart displays forecast visibility and ceiling conditions for the selected region. The following table lists the categorical outlook definitions used by Universal Weather:

Flight Rule Condition	Definition
VFR	Ceiling > 3000 ft and Visibility > 5 statute miles (8.05 km)
Marginal VFR	Ceiling ≤ 3000 ft and Visibility ≤ 5 statute miles (8.05 km)
IFR	Ceiling < 1000 ft and Visibility < 5 statute miles (4.83 km)
Low IFR	Ceiling < 500 ft and Visibility < 1 statute miles (1.61 km)

WX DEPICTION is based on a finite number of reporting stations. For finer weather detail, refer to other sources such as NEXRAD OR TAF reports. The following table list the colors used on WX DEPICTION images:

Precipitation Intensity	Color
VFR	Sky Blue
Marginal VFR	Green
IFR	Yellow
Low IFR	Red

GRAPHICAL WEATHER (OPTIONAL) (Cont)

WINDS/TEMPS IMAGE

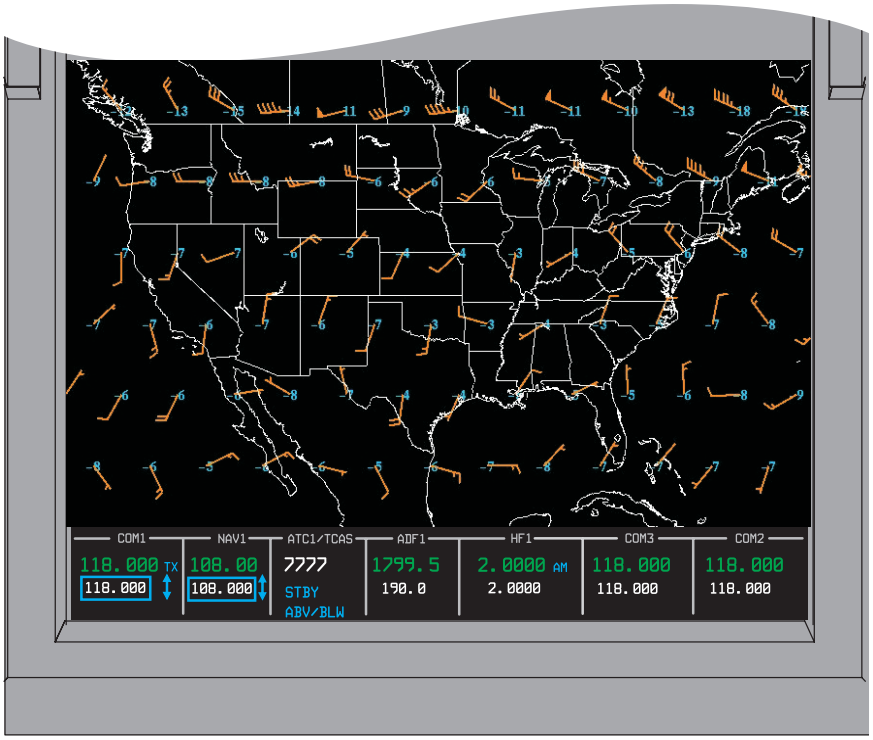

The WINDS ALOFT chart depicts forecast wind direction, wind speed and temperature at a specified altitude. Wind speed is indicated with the use of pennants and barbs on an arrow. The pennants represent 50 knots, barbs represent 10 knobs, and half barbs represent 5 knots. The total wind speed is obtained by the summation of all the pennants and barbs on the arrow. The head points to the wind direction. The temperatures are depicted next to the grid points in degrees Celsius. Missing wind is represented as M.

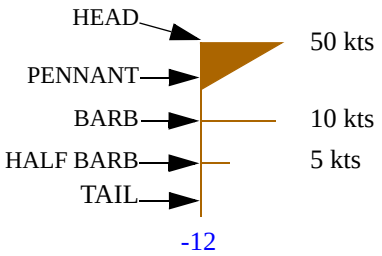

GRAPHICAL WEATHER (OPTIONAL) (Cont)

TURBULENCE IMAGE

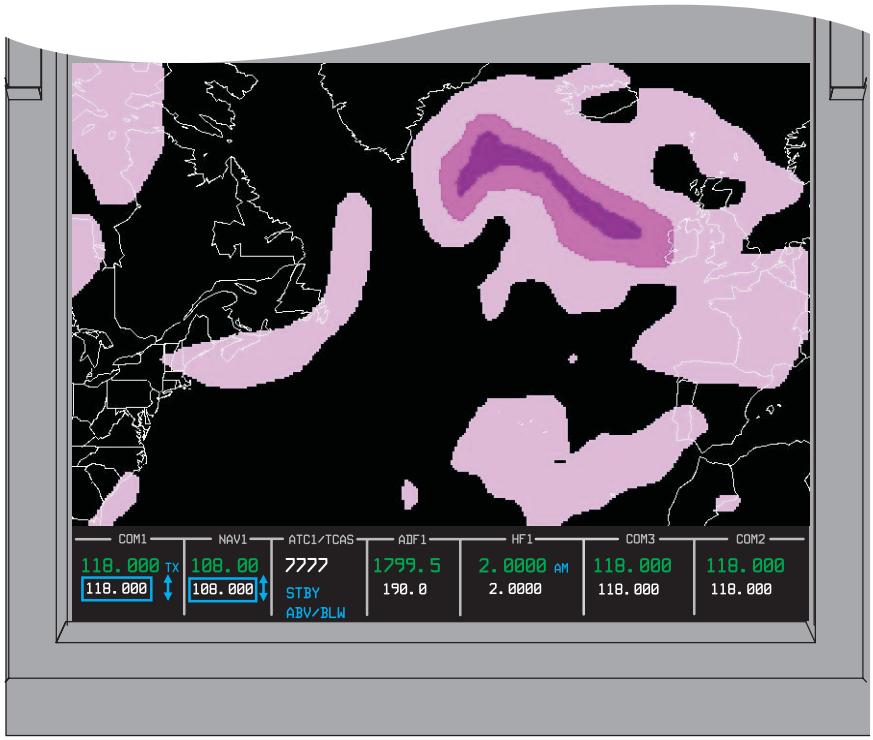

A TURBULENCE image is in view on the lower or upper display area of the MFD when selected from the GWX image list and the GWX format is active. the specified altitudes available for turbulence images (x 1000 ft) are: 5, 10, 18, 25, 30, 34, 39, 45, and 53. The following table lists the colors used on TURBULENCE images to represent areas of likely turbulence:

Turbulence Probability	Color
Low probability	Light Magneta
Moderate probability	Medium Magenta
High probability	Dark Magenta

GRAPHICAL WEATHER (OPTIONAL) (Cont)

ICING IMAGE

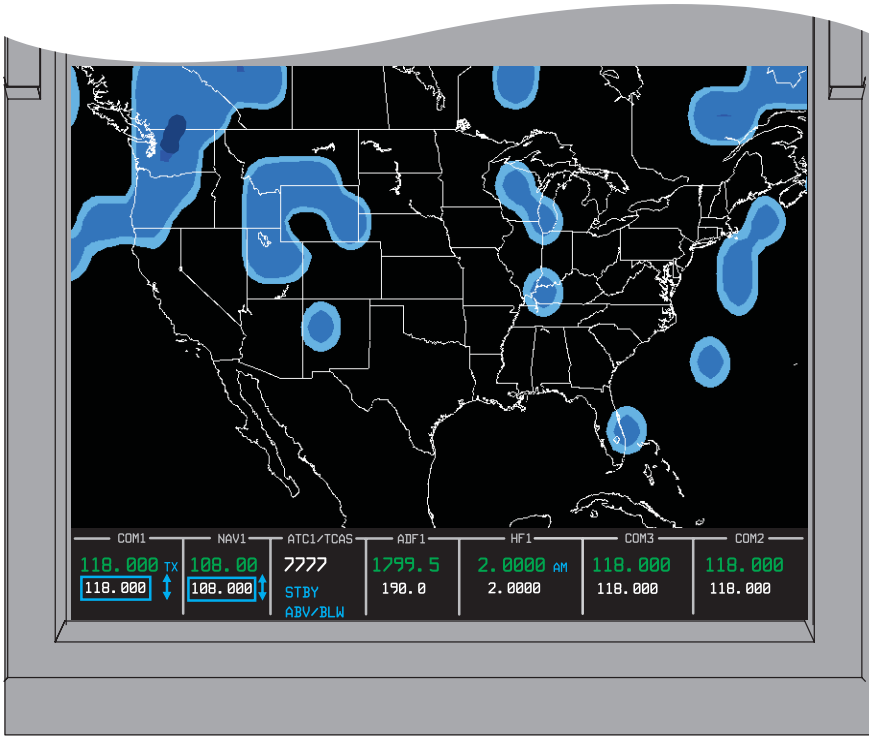

An icing image is in view on the lower or upper display area of the MFD when selected from the GWX image list and the GWX format is active. The specified altitudes available for icing images (x 1000 ft) are: 0, 5, 10, 18, 24, and 30.

Icing Potential	Color
Trace rime	Light Blue
Trace clear - light rime or clear	Medium Blue
Light or greater mixed ice	Dark Blue

GRAPHICAL WEATHER (OPTIONAL) (Cont)

GRAPHICAL WEATHER (GWX-3000)

The Graphical Weather (GWX-3000) function allows the pilot to view GWX images or reports on the MFD. Weather reports include SIGMET and AIRMET advisories and METARs. Terminal Area Forecast (TAF) are also available. Observation images include NEXRAD and Echo Tops. Selection of the desired images is via the GRAPHICAL WEATHER menu. Graphical images are for the whole of the contiguous United States only. GWX is for informational purposes only. By its very nature, GWX is delayed from real time weather conditions.

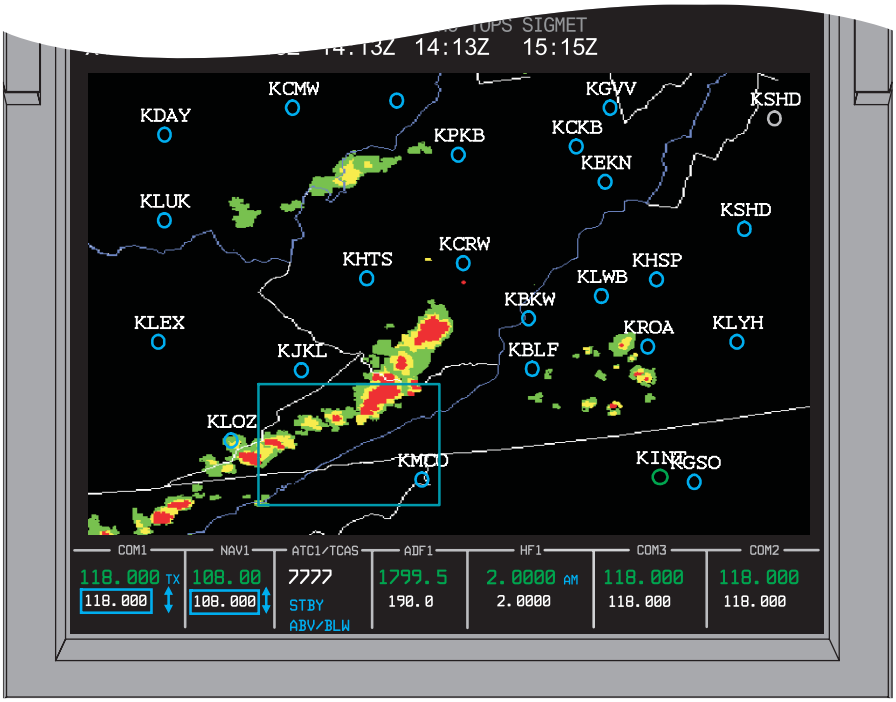

Weather products are transmitted by the satellite on the intervals listed in the following table:

Product	Transmission Interval	Typical Information Update Intervals
NEXRAD	5 minutes	5 minutes
METAR	12 minutes	On the hour ± 10 minutes unless special announcements
ECHO TOPS	90 seconds	30 minutes
SIGMETs	12 minutes	As weather changes
AIRMETs	12 minutes	As weather changes
TAF	12 minutes	Every 6 hours: (0Z, 6Z, 12Z, 18Z) unless amended

The following tables list the colors used on NEXRAD images to represent the regions and relative intensity:

Mixed Precipitation Intensity	Color
10 dBZ < 30	Light Magenta
30 dBZ < 40	Medium Magenta
dBZ 40	Dark Magenta

Snow Intensity	Color
10 dBZ < 30	Light Blue
30 dBZ < 40	Medium Blue
dBZ 40	Dark Blue

Rain Intensity	Color
20 dBZ < 30	Green
30 dBZ < 40	Yellow
dBZ 40	Red

GRAPHICAL WEATHER (OPTIONAL) (Cont)

GRAPHICAL WEATHER MENU

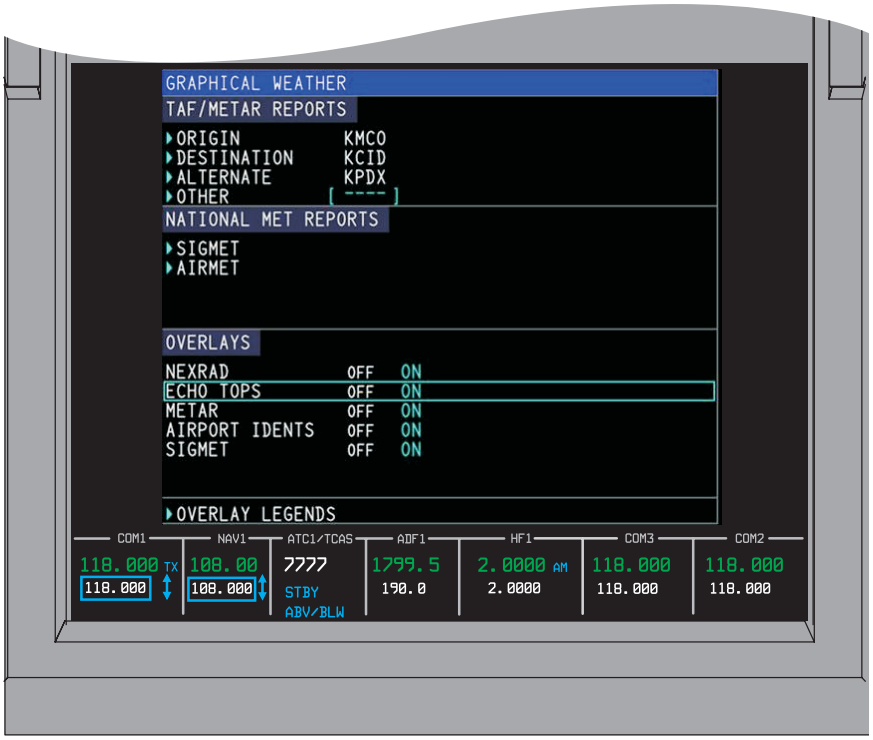

The GRAPHICAL WEATHER menu provides controls for selection of textual weather reports, forecasts, and selection of graphical image overlays which are displayed on the MFD. The following selections may be made from the GRAPHICAL WEATHER menu:

TAF/METAR REPORTS

The TAF/METAR REPORTS menu provides selections for the ORIGIN, DESTINATION, ALTERNATE, and OTHER airports. When an airport is selected, a list of the three most recent METAR reports available is displayed on the first page, in order of most recent to oldest. The second page displays the current TAF report available for that airport.

NATIONAL MET REPORTS

The NATIONAL MET REPORTS menu provides selections to display SIGMET and AIRMET reports for the whole of the contiguous United States. When a report type is selected, the appropriate reports page is displayed. Each SIGMET and AIRMET is in view on a separate page. SIGMETs are listed alphabetical by identifier, and AIRMETs are listed in the order received.

OVERLAYS

When the GWX format is selected, the OVERLAYS menu will display a list of overlays that may be displayed on the MFD.

OVERLAY LEGENDS

The OVERLAY LEGENDS page displays all the symbology used on the overlays to assist the operator with interpreting the information display on the overlay.

GRAPHICAL WEATHER (OPTIONAL) (Cont)

SELECT GWX IMAGE OVERLAY

The GWX MENU displays a list of overlays (NEXRAD, Echo Tops, METARS, Airport Idents and SIGMETS) that are available for display on the MFD when the GWX format is selected.

Follow the steps below to select a GWX image overlay:

1. Turn the MENU ADV knob to position the cursor around the desired overlay selection under the OVERLAYS menu list.
   a. To view the overview legends, turn the MENU ADV knob to the OVERLAY LEGENDS selection item.
   b. Push the PUSH SELECT button to display the OVERLAY LEGENDS page on the MFD. That page displays all the symbology used on the overlays to assist the pilot with interpreting the information shown on the overlay.
   c. To exit the OVERLAY LEGENDS page, push the ESC button on the MFD Control panel.
2. With the cursor positioned on the overlay selection, push the PUSH SELECT button on the MFD Control panel to turn the selected overlay ON or OFF.

TAF/METAR REPORTS

METAR REPORTS PAGE

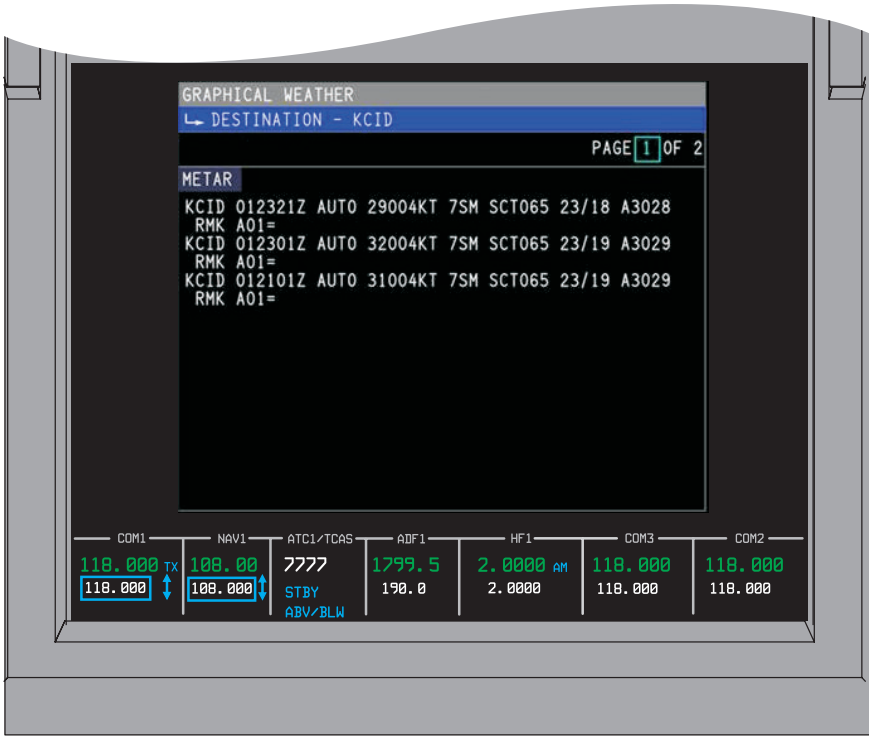

SELECT TAF/METAR REPORT

The GWX MENU displays TAF/METAR REPORTS menu selections for the ORIGIN, DESTINATION, ALTERNATE and OTHER airports. When an airport is selected, a list of TAF and METGAR reports available for that airport is displayed, listed in order of the most recent to oldest. The selected TAF or METAR report is displayed on a submenu page of the MFD.

The airport IDs are supplied by the FMS and are based on the active flight plan. The identifier of the OTHER airport is displayed as dashed to indicate an airport may be entered by the pilot.

To select a TAF/METAR report follow the steps below:

1. Turn the MENU ADV knob to position the cursor around the airport selection under the TAF/METAR REPORTS menu title for the desired report.
2. Push the PUSH SELECT button on the MFD Control to display the appropriate airport page with the list of METAR reports for that airport.
3. Turn the DATA knob on the MFD Control panel to select the TAF reports page with the current TAF for that airport.

TAF/METAR REPORTS (Cont)

TAF REPORTS PAGE

SELECT SIGMET/AIRMET REPORT

The GWX MENU displays NATIONAL MET REPORT menu selections for SIGMET and AIRMET reports. When a report type is selected, a list of either SIGMET or AIRMET reports will be displayed. SIGMET reports are listed in alphabetical order by identifier. AIRMET reports are listed in the order they are received. Selecting a SIGMET or AIRMET displays that report on a submenu page of the MFD. A maximum of 50 active SIGMET reports and 75 active AIRMET reports can be presented.

To select a SIGMET/AIRMET report follow the steps below:

1. Turn the MENU ADV knob to position the cursor around either the SIGMET or AIRMET selection under the NATIONAL MET REPORTS menu listing.
2. Push the PUSH SELECT button on the MFD Control panel to display the appropriate reports page.
3. When more than one SIGMET or AIRMET report is available, turn the DATA knob to view all reports. Each turn of the DATA knob selects the next report page.

SIGMET/AIRMET REPORTS

SIGMET/AIRMET REPORTS PAGE

The SIGMET/AIRMET Reports page title is either SIGMET or AIRMET, depending on the selection made on the GRAPHICAL WEATHER menu page. When there are multiple reports available, additional pages are available to display the SIGMETs or AIRMETs.

When graphical SIGMET data is available, the message NO GRAPHICAL SIGMET appears in the upper right corner of the SIGMET Report page.

A maximum of 50 active SIGMET reports and 75 active AIRMET reports can be presented.

OVERLAYS

GWX OVERLAYS MENU

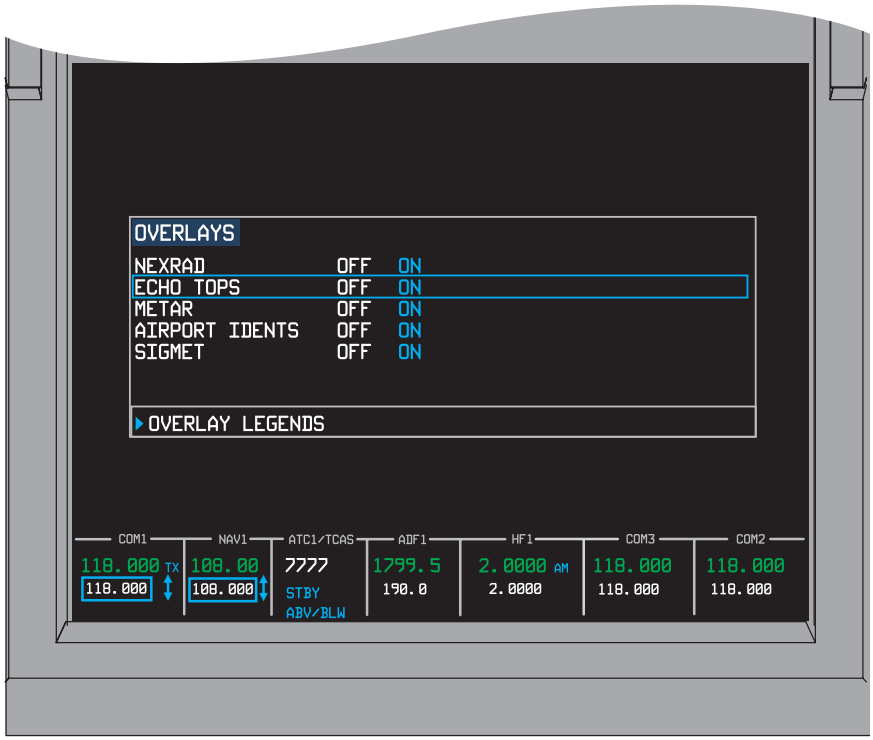

The Overlays Menu is used to control the various layers of information displayed on the GWX format.

The GWX Overlays Menu is selected from the Graphical Weather Menu with controls on the MFD Control. The GWX Overlays Menu is used to control the following:

- NEXRAD
- Echo Tops
- METARS
- Airport Idents
- SIGMETs

Once an overlay is selected for display it remains on until selected OFF.

OVERLAYS (Cont)

OVERLAY LEGENDS

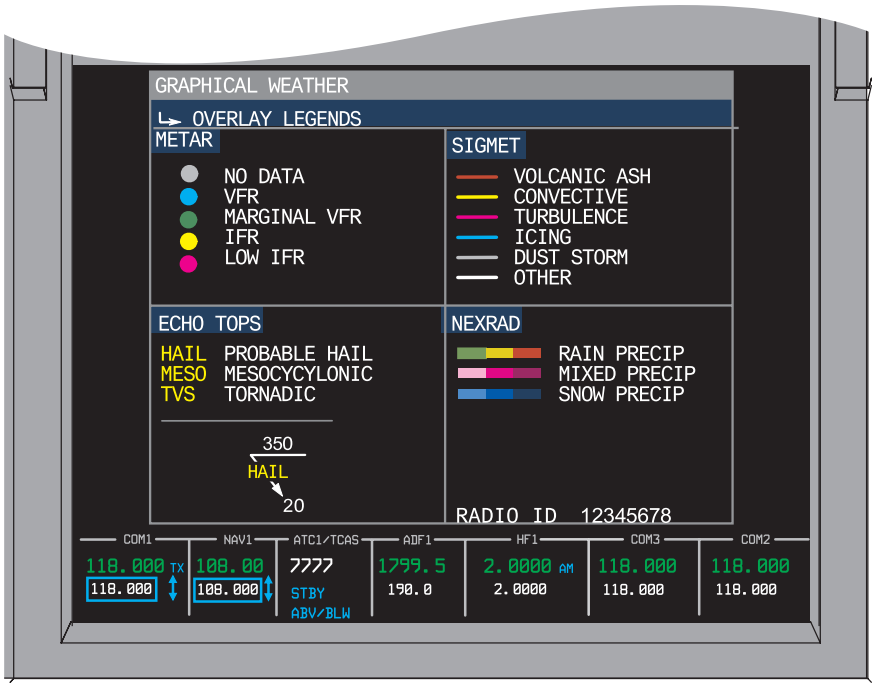

The OVERLAY LEGENDS page displays all the symbology used in the graphical weather overlays.

OVERLAYS (Cont)

METAR OVERLAY

When METAR is selected from the OVERLAYS menu and the GWX format is selected, the graphical METAR image is displayed on the MFD .

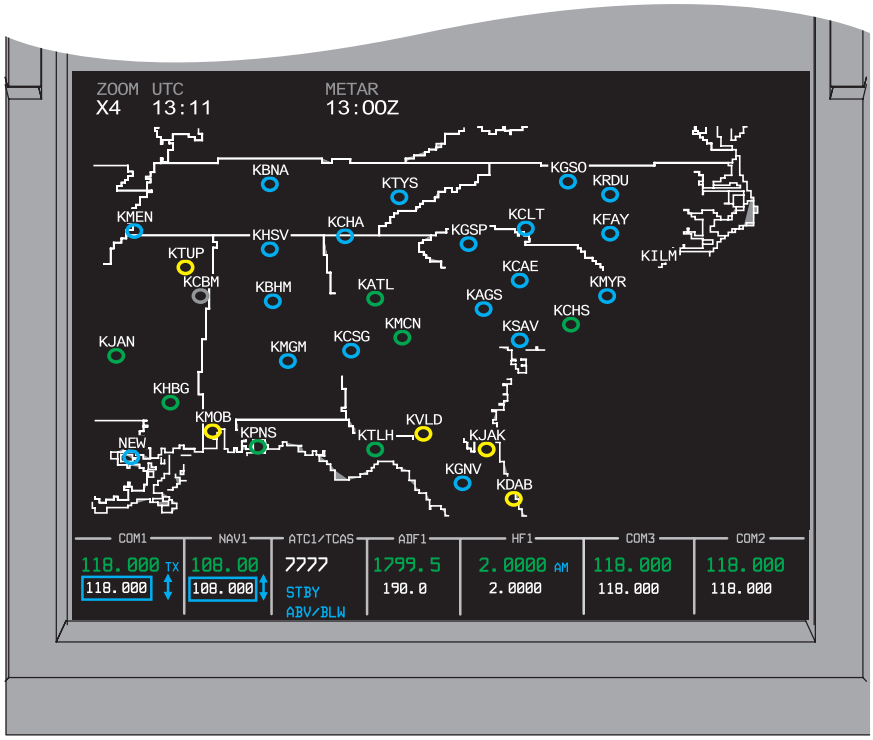

The METAR overlay consists of flight rule icons that are colored according to the IMC Flight Rules data received from the datalink for the associated airport. When no data is received or the received data is corrupted or cannot be interpreted, a gray circle is displayed for the associated airport. To reduce display clutter, the number of displayed icons is filtered based on on the selected zoom level. The table following table lists the categorical outlooks as defined by the FAA:

Flight Rule Condition	Definition
VFR	Ceiling > 3000 ft and Visibility > 5 Statute miles
Marginal VFR	1000 ≤ Ceiling ≤ 3000 ft and/or 3 ≤ Visibility ≤ 5 miles
IFR	500 ≤ Ceiling < 1000 ft and/or 1 ≤ Visibility < 3 miles
Low IFR	Ceiling < 500 ft and/or Visibility < 1 mile

OVERLAYS (Cont)

AIRPORT IDENTS OVERLAY

When AIRPORT ICONS is selected ON from the OVERLAYS menu and the GWX format is selected, the airport icons are displayed.

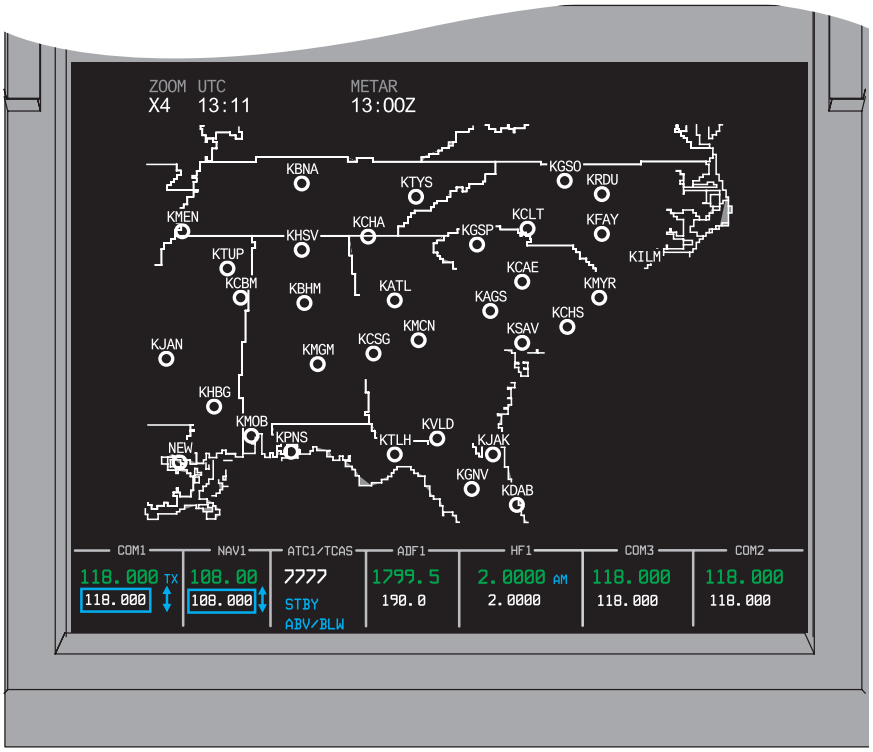

The AIRPORT ICONS depicts airports and reporting stations that are within the currently displayed image. The AIRPORT ICONS consist of a small circle with the ICAO identifier for the airport above the circle.

OVERLAYS (Cont)

SIGMET OVERLAY

When SIGMET is selected from the OVERLAYS menu, and the GWX format is selected the graphical SIGMET images are displayed on the MFD.

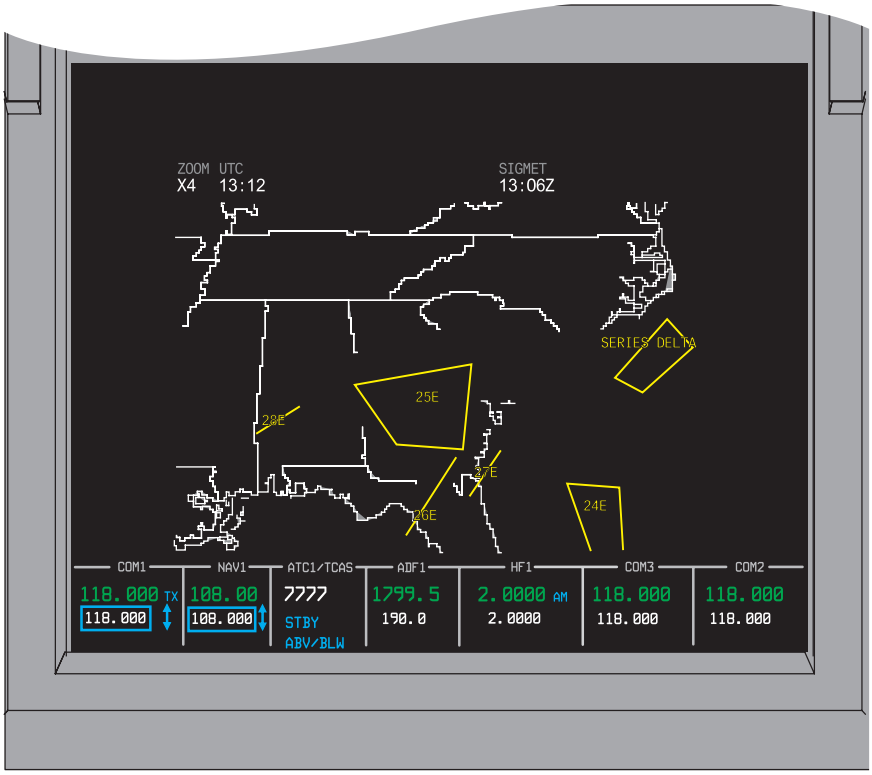

The SIGMET consists of a point, line, or unfilled polygon that defines the geographic extent of the report and its identifier. The following illustration displays the SIGMET condition and the associated color.

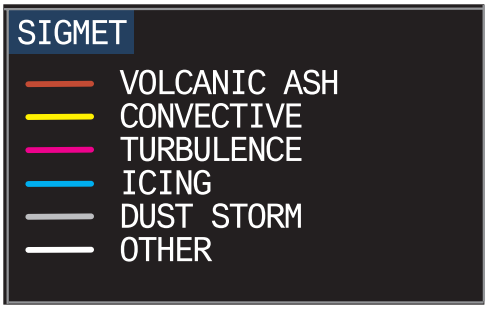

DATABASE FUNCTIONS

STATUS PAGE

The STAT button on the MFD Control is used to display a menu of lesser used menus. They are displayed when a Status Format Window is selected. The STAT menu includes the following formats:

- Database Effectivity
- Chart Subscription (Example shown above)
- File Server Configuration

DATABASE FUNCTIONS (Cont)

DATABASE EFFECTIVITY PAGE

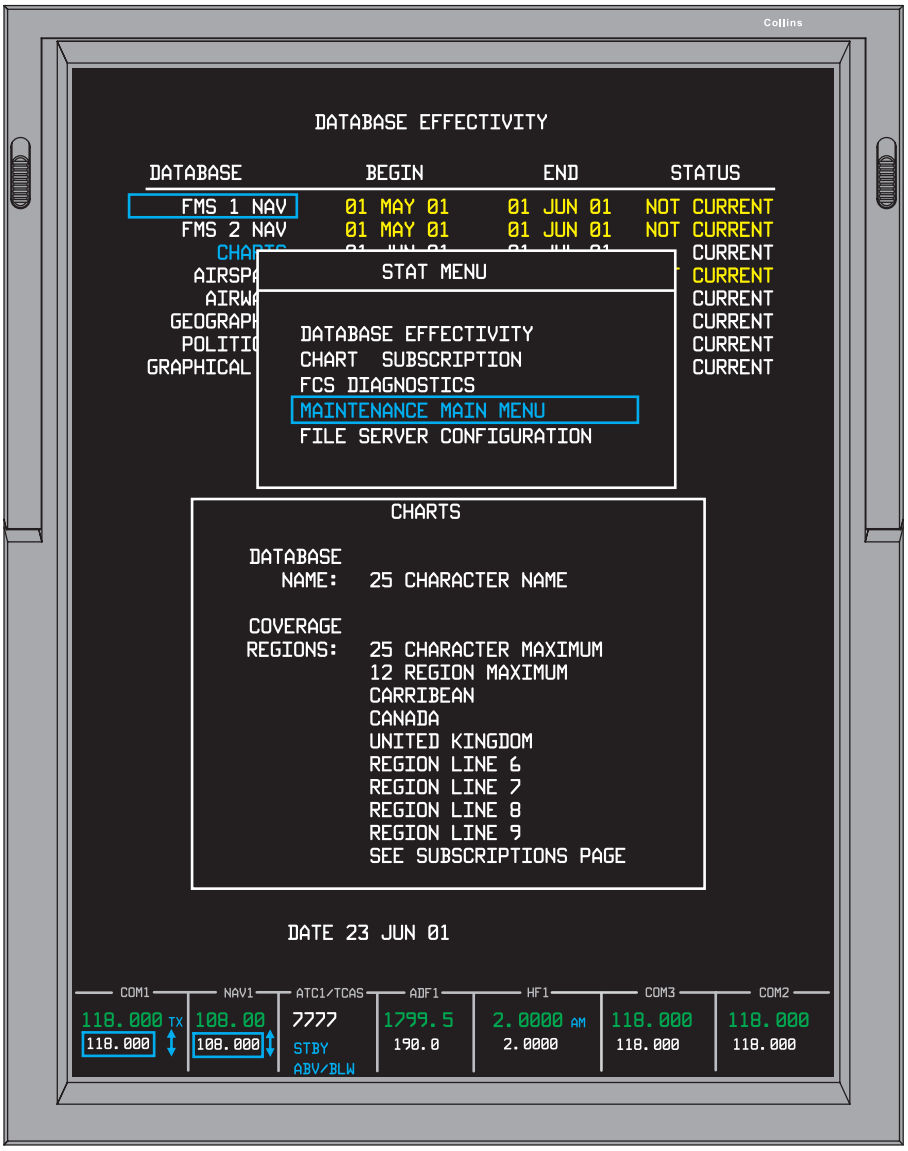

The Database Effectivity page provides the aircraft operator with a means to assess the current state of the installed data bases. A list of the installed databases is displayed and includes the name, begin date, an end date, and status (current or not current) for enabled databases. The Database Effectivity page is selected from the STAT format menu when the MFD is in a STAT window configuration.

If in a Dual FSU configuration, the MFD displays database information from the same side FSU. The left MFD displays data from the left FSU and the right MFD displays data from the right FSU.

DATABASE FUNCTIONS (Cont)

CHART SUBSCRIPTION PAGE

The Chart Subscription Page allows the pilot or maintenance personnel to enter information to change the chart region coverage of the database. The Chart Subscription page contains a subscription number data entry field, a list of enabled regions, and an add regions data entry field. Regions are added to the list by entering temporary access codes. Both the subscription number and access codes are obtained from Jeppesen. The Chart Subscription page can only be modified on the ground.

DATABASE FUNCTIONS (Cont)

FILE SERVER CONFIGURATION PAGE

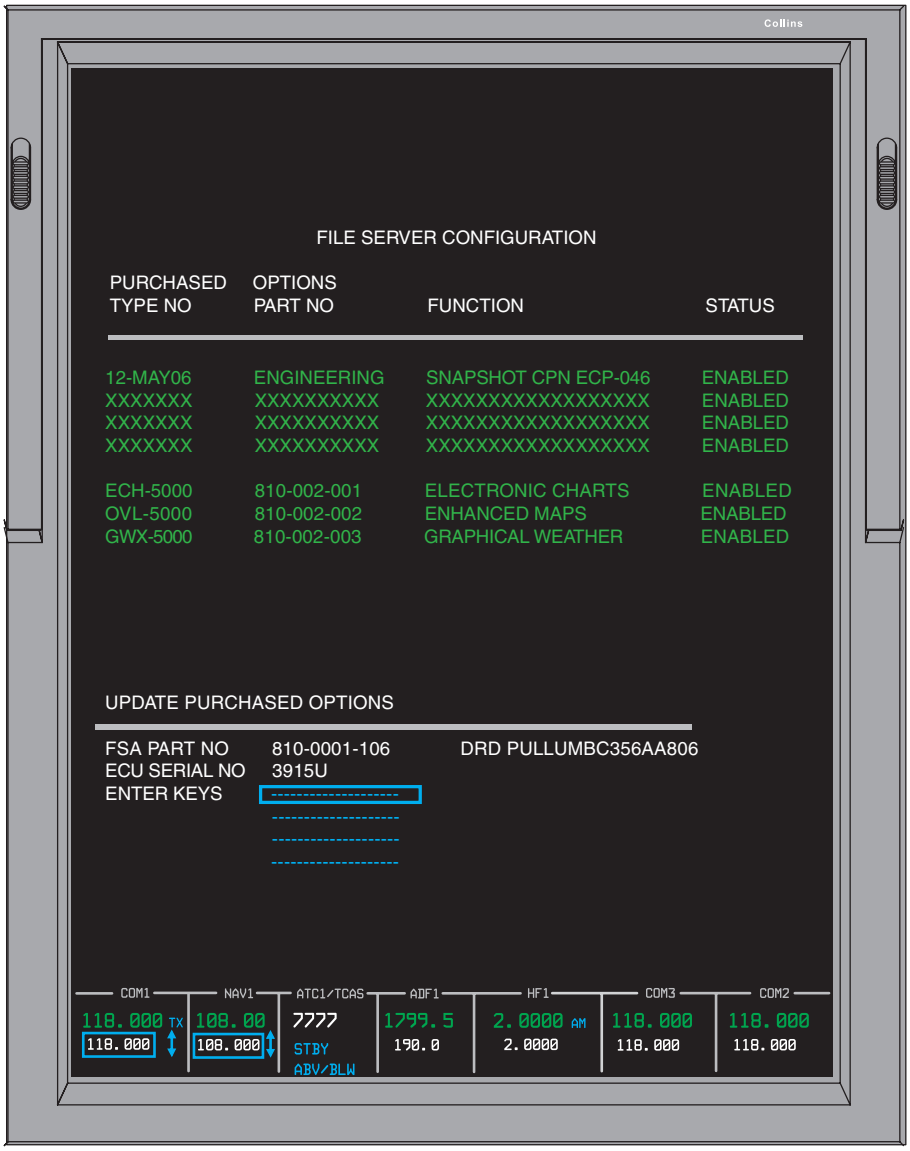

When the File Server Configuration menu is selected, the File Configuration Page is displayed. The Purchased Type Number, Options Part number, Function and Status of installed software is displayed. Part numbers and access codes (provided by Rockwell Collins Inc.) are entered on this page to load optional software.

Table of Contents

Introduction 12-01-01
Fuel Tank System 12-01-02
Description 12-01-02
Fuel Tank Capacities 12-01-02
Components and Operation 12-01-03
Tank Construction 12-03-03
Water Drain Valves 12-01-04
Flapper Check Valves 12-01-05
Vent System 12-01-05
Fuel Distribution 12-01-05
Description 12-01-05
Engine Fuel Feed 12-01-05
APU Fuel Feed 12-01-05
Electric Fuel Pumps 12-01-05
Components and Operation 12-01-05
Fuel Computer 12-01-05
Motive Flow 12-01-05
Scavenge Ejector 12-01-05
Collector Tank 12-01-06
Main Ejector 12-01-06
Fuel System Controls 12-01-06
Engine Fuel Shutoff Valve (SOV) 12-01-06
Fuel Heater/Oil Cooler 12-01-06
Fuel Filter 12-01-06
APU Fuel Shutoff Valve (SOV) 12-01-07
Refueling/Defueling 12-01-07
Description 12-01-07
Components and Operation 12-01-07
Fuel Computer 12-01-07
Pressure Fueling 12-01-07
Grounding Receptacles 12-01-08
System Test 12-01-08
High-Level Sensors 12-01-08
Refuel/Defuel Single Point Adapter 12-01-08
Gravity Refueling 12-01-08
Fuel Indication and Control 12-01-09
Description 12-01-09
Components and Operation 12-01-09
Fuel Quantity Probes 12-01-09
Fuel Temperature Probe 12-01-09
Fuel Level Sensors 12-01-09
Fuel Quantity Gaging Computer 12-01-09
Refuel/Defuel Control Panel 12-01-09
Fuel Quantity Gaging 12-01-10
Description 12-01-10
Components and Operation 12-01-10
Fuel Computer 12-01-10
Controls and Indication 12-01-10
Description 12-01-10
Fuel Control Panel 12-01-10
Fuel Display 12-01-11
Fuel Temperature Readouts 12-01-11
Fuel Quantity Indications 12-01-11
Fuel Synoptic Page 12-01-12
EICAS Messages 12-01-13

INTRODUCTION

The fuel tanks are located in the left and right wings and supply fuel to the engines and APU. Tanks can be refueled through a single-point adapter or manually by overwing refueling. The fuel computer controls automatic refueling, powered cross-flow, fuel transfer, measurement of fuel quantity and temperature. Fuel system data is presented on the EICAS and synoptic pages.

FUEL TANK SYSTEM

DESCRIPTION

The Challenger 300 stores fuel in the left and right wing tanks. The tanks are sealed with a fuel resistant sealant.

The tanks provide single-point and overwing refueling capability and provisions for removing condensation from the tanks through underwing water drains. Low drag NACA vent scoops provide static venting of the tanks. Fuel quantity and temperature measurement probes in the tanks provide indications for the EICAS.

All fuel supplied to the engines flows through the collector tanks. The left and right collector tanks are located inside each wing tank at the rear and inboard of the wing. Each collector tank is replenished by gravity through flapper check valves installed on the division between the collector and the wing tanks and by a scavenge ejector when the engines are operating. The right side backup DC fuel pump takes fuel from the right collector tank and delivers it to the APU.

FUEL TANK CAPACITIES

Maximum usable fuel loads are given in the tables below.

Pressure Refuel		
Fuel Tank	**Fuel Mass †**	
Right	7075 lb	3210 kg
Left	7075 lb	3210 kg
Left & Right	14 150 lb	6420 kg
† Based on a fuel density of 6.75 lb/USG (0.809 kg/litre), rounded to the nearest 5 lb or 5 kg. Fuel Mass is provided for reference only and should not be considered limiting.		

Gravity Refuel (Airplane Level)		
Fuel Tank	**Fuel Mass †**	
Right	6500 lb	2950 kg
Left	6500 lb	2950 kg
Left & Right	13 000 lb	5900 kg
† Based on a fuel density of 6.75 lb/USG (0.809 kg/litre), rounded to the nearest 50 lb or 25 kg. Fuel Mass is provided for reference only and should not be considered limiting.		

FUEL TANK SYSTEM (Cont)

COMPONENTS AND OPERATIONS

TANK CONSTRUCTION

The wing tanks are integral type fuel tanks that use a wet wing design and are sealed with a fuel resistant sealant.

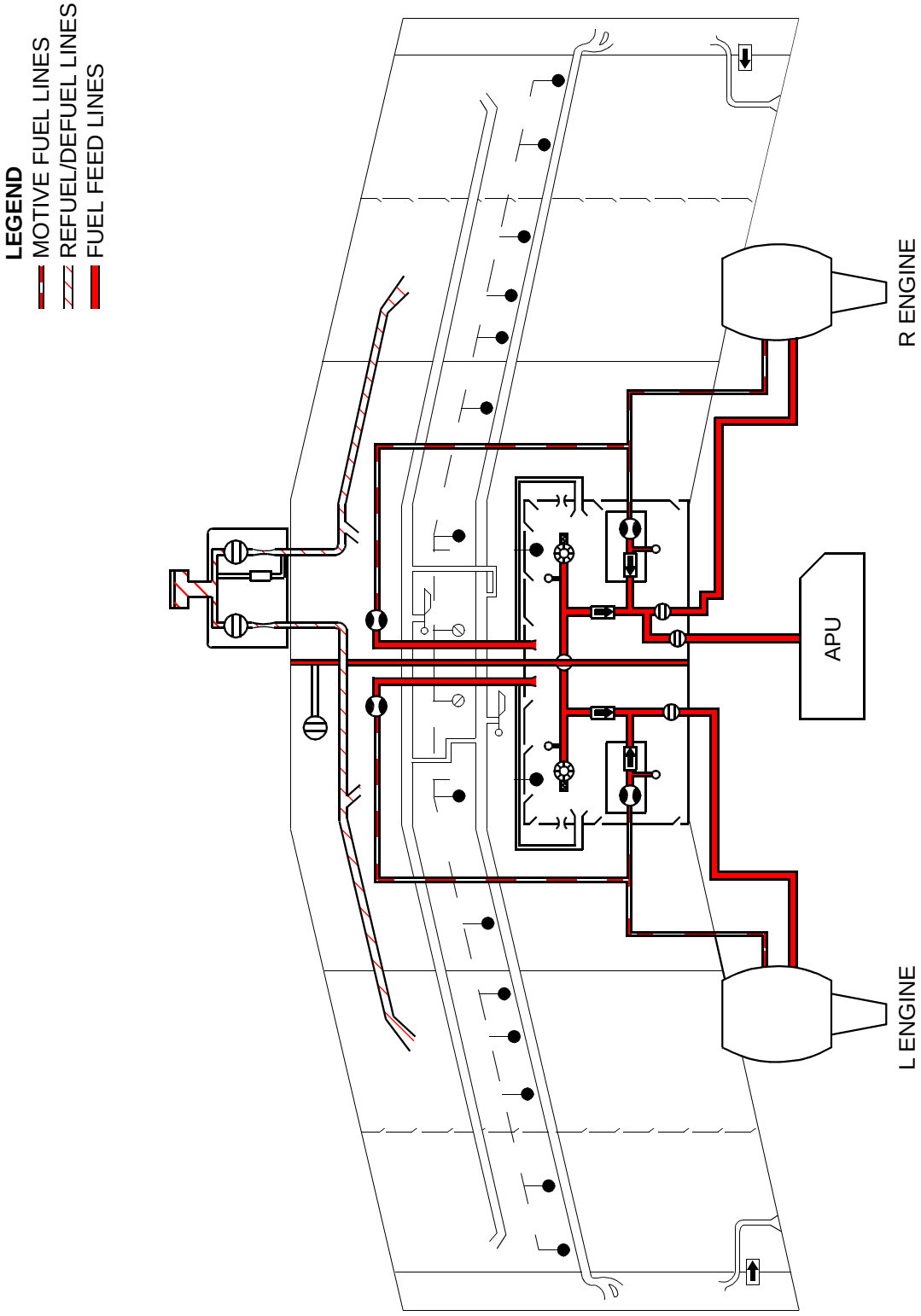

FUEL TANK SYSTEM (Cont)

WATER DRAIN VALVES

There are three water drain valves in each wing. One for the collector tank, one for the wing tank, and one for the surge tank, which is located in the outboard area of each wing. They are used to drain water and contaminates that collect in the fuel tanks and to complete the removal of remaining fuel during defueling. If contamination is suspected all tanks should be drained until the fuel is clear of water or other contaminates.

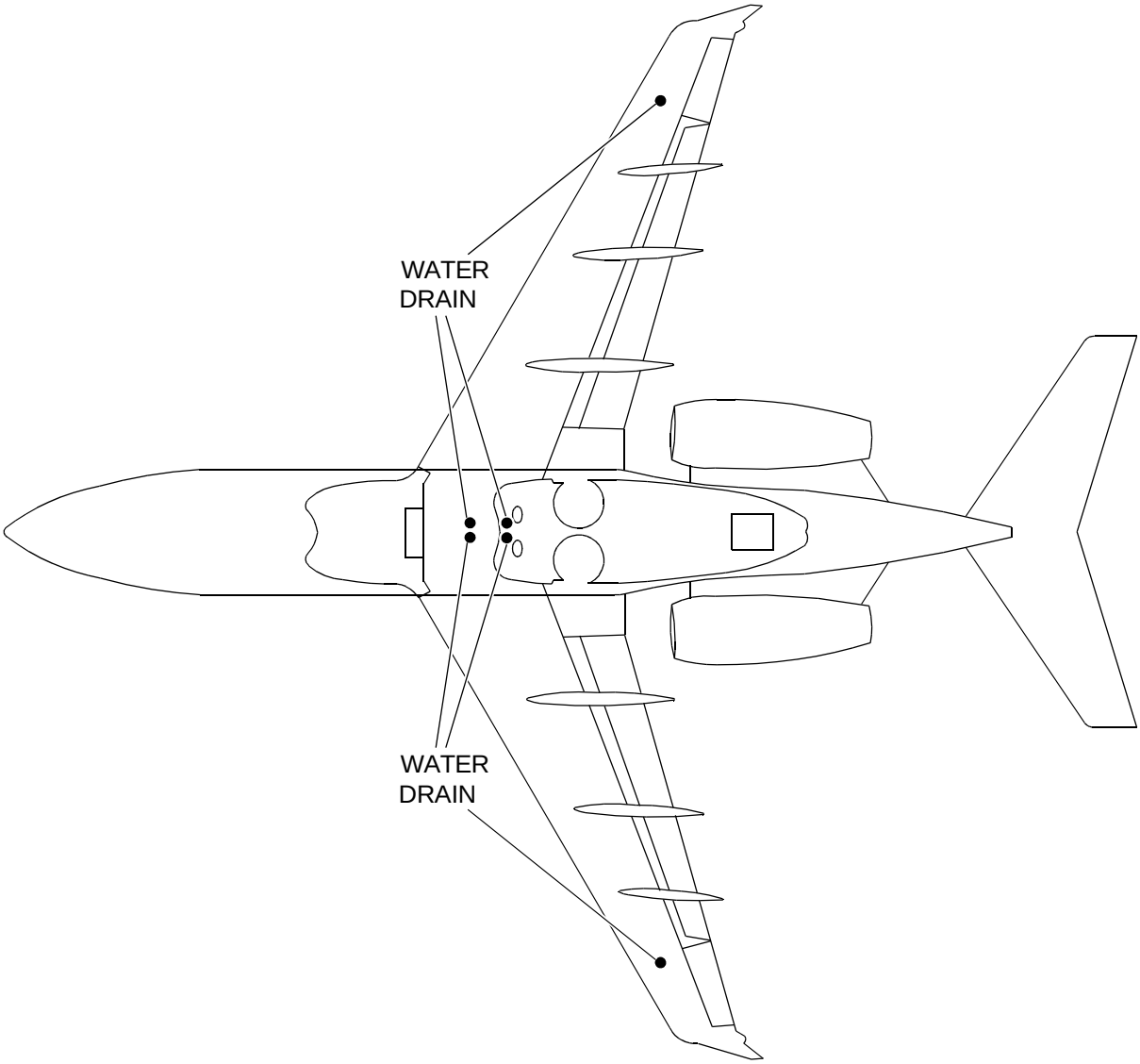

CFO1201002_006

FUEL TANK SYSTEM (Cont)

FLAPPER CHECK VALVES

Each wing tank incorporates flapper check valves that are attached to the internal wing ribs. These valves prevent outward flow of the fuel during wing low maneuvers.

VENT SYSTEM

The tanks are vented through interconnecting vent lines to NACA scoops (low drag vents) located on the lower surface of the wing trailing edges (one per wing).

During operations on the ground and in flight, the NACA scoops provide static ventilation of the tanks and relieve air pressure differential caused by the refueling process, thermal expansion of the fuel, or altitude variation in flight.

Surge bays located outboard of both wing tanks provide additional expansion volume for the vent system to prevent fuel spillage. Each surge bay holds 53.6 lbs of fuel and flapper valves are located between the surge bays and tanks to prevent outward flow of fuel from the tanks.

FUEL DISTRIBUTION

DESCRIPTION

There are two separate fuel distribution systems. One feeds the left engine, and the other feeds the right engine and APU.

ENGINE FUEL FEED

The primary fuel feed to each engine is independently provided from its respective tank. The feed line is pressurized by means of an ejector taking its motive flow from the high pressure stage of the engine fuel system. This high pressure fuel is delivered to the ejector nozzle. The same high pressure source is also used to drive the scavenge ejector. The primary ejector is totally self energized by its respective engine and is not reliant on any other power source for its control or operation. Proper operation of the primary feed ejector is signaled by a pressure switch located at the ejector outlet.

APU FUEL FEED

The APU fuel feed is established from the right collector tank to the APU by the right main ejector or by the right DC fuel pump if the ejector pressure is low. This system includes an APU shutoff valve.

ELECTRIC FUEL PUMPS

The electric fuel pumps provide fuel pressure to the engines when the main ejector pumps cannot, such as during engine start and main ejector pump failure. The electric fuel pumps also provide fuel pressure to transfer fuel from one wing tank to the other.

COMPONENTS AND OPERATION

FUEL COMPUTER

A dual-channel fuel system computer calculates the onboard fuel quantity and controls the refueling. One channel controls one side and the other channel controls the opposite side. If the onside channel fails, the other channel automatically assumes control. Each channel receives signals from the probes and aircraft attitude information from the AHRS.

The computer calculates the fuel quantity as weight in each tank. The computer uses the following information: fuel density, fuel probes readings, aircraft attitude and accelerations, and WOW signal.

MOTIVE FLOW

The ejectors operate by using motive flow pressure from the engine-driven pump. As high-pressure motive flow passes through the venturi of the ejectors, fluid velocity is increased and low pressure is created. The suction caused by the low pressure moves the fuel out of the tank.

SCAVENGE EJECTOR

The scavenge ejectors are operated by motive flow created by the high-pressure output of the engine-driven fuel pumps. The two ejectors are located at the lowest inboard point of each wing tank. The ejectors transfer fuel from the wing tanks to the collector tanks.

FUEL DISTRIBUTION (Cont)

COLLECTOR TANK

All fuel consumed by the engines comes from the collector tanks. The collector tanks are located in the aft section of each wing tank. Fuel from the wings flows into the left and right collector tanks from the associated wing tank through the flapper check valves. When operating, scavenge ejectors also remove fuel from the wing tanks and delivers the fuel to the associated collector tank.

MAIN EJECTOR

Two main ejectors are operated by motive flow created by the high-pressure output of the engine-driven fuel pumps. Each ejector pump takes fuel from its associated collector tank and delivers the fuel to the engine. The main ejectors are installed on the bottom of the collector tanks.

FUEL SYSTEM CONTROLS

The fuel system controls are as follows:

- L PUMP and R PUMP standby boost pump rotary switch (OFF, AUTO, ON)
- XFER SWITCH
- GRAVITY XFLOW switch
- L (R) ENG FIRE switches

In order to provide pressure during engine start or in the event of feed ejector failure, a standby boost pump is fitted in parallel with each feed ejector. When the engine RUN switch is selected ON and the respective standby boost pump is armed, it will be commanded ON as long as the feed ejector does not deliver sufficient pressure to the dedicated engine. For added safety, when sufficient pressure is achieved at the primary ejector outlet, a time delay will command the boost pump to remain ON for an additional 10 seconds.

The standby boost pumps are also used for lateral balance of the fuel load by pumping fuel from one wing to the other. If lateral imbalance of fuel loads occur (e.g. after engine failure), fuel can be pumped from wing to wing by means of the standby boost pumps which are interconnected by a transfer valve. The transfer valve is closed in order to isolate left and right engine feed systems from each other except when restoring balance. Transfer is achieved by opening the transfer valve and then switching on the standby boost pump. Fuel will be pumped from the wing through the transfer valve and the inactive standby boost pump into the other wing to restore fuel balance.

A secondary means of balancing fuel completely independent of the pumped system is provided by a gravity crossflow system that provides a direct flow path between the wings and is controlled by the opening and closing of a gravity crossflow shutoff valve. While the gravity transfer shutoff valve is opened, aircraft maneuvering (steady heading sideslip) may be required to achieve transfer of fuel if the initial imbalance is minimal. Aircraft maneuvering is not required when the imbalance between the two tanks is large.

Whether performing balancing by means of the standby boost pumps or by gravity, the action is controlled manually by the pilot while visually monitoring the fuel contents and messages on the EICAS.

An independent operated fuel shutoff valve for each engine feed is located forward of the engine rotor burst areas. In the event of an engine fire the valves are closed by the activation of L (R) ENG FIRE switches. on the center pedestal. They can be subsequently reopened if required by depressing the switches once more.

ENGINE FUEL SHUTOFF VALVE (SOV)

The engine fuel shutoff valves are located on the aft spar of the wing box in the main landing gear bay and are controlled by the L (R) ENG FIRE switches on the ENGINE control panel located on the center pedestal. The engine fuel shutoff valves are electrically operated valves that stop the flow of fuel to the engines.

FUEL HEATER/OIL COOLER

The fuel heater/oil cooler (FHOC) is located in the engine accessory gear box. The engine FHOC purpose is to heat the fuel sufficiently to prevent ice formation in the engine fuel system, while maintaining the engine oil temperature within limits.

FUEL FILTER

The fuel filter assembly is mounted just aft of the oil tank on the engine. The filters are monitored for contamination by an impending bypass switch. If the fuel pressure parameters are exceeded, a signal is sent to the EICAS.

FUEL DISTRIBUTION (Cont)

APU FUEL SHUTOFF VALVE (SOV)

The APU fuel feed SOV is an electrically operated shutoff valve. In case of an APU fire, pushing the APU FIRE switch on the ENGINE control panel, located on the center pedestal, closes the SOV. During normal operations, the SOV is automatically controlled.

REFUELING/DEFUELING

DESCRIPTION

Refueling can be accomplished using either pressure or gravity refueling procedures. Pressure refueling is preferred, while overwing gravity refueling is only used when single-point refueling capabilities do not exist.

Suction defueling of the fuel tanks is accomplished by applying suction to the single-point refuel/defuel adapter with the refuel/defuel control panel configured for defueling. Defueling of the aircraft is not a pilot function and is carried out only by maintenance personnel.

COMPONENTS AND OPERATION

FUEL COMPUTER

The dual-channel fuel system computer monitors and controls the refueling process. Each channel receives signals from the fuel system and aircraft attitude information from the AHRS. The computer uses the information to calculate the fuel weight.

PRESSURE FUELING

The refuel/defuel control panel controls all the refueling and defueling operations. It tests the integrity of the fuel system components and displays individual fuel tank quantities. The refuel/defuel control panel is located in the right wing root leading-edge fairing.

REFUELING AUTO MODE

In the AUTO MODE, the refueling personnel preselect the total fuel quantity through the INC/DEC switch. When the desired quantity is set, use the ON/OFF toggle switch to start refueling. The fuel system computer automatically directs the preselected quantity of fuel and is dispensed at 368.5 lbs per minute at 55 psi. When the desired quantity is reached, refueling will automatically stop. Reposition the ON/OFF toggle switch to OFF.

REFUELING MANUAL MODE

The manual mode allows refueling personnel to direct fuel to a specific tank by selecting the appropriate shutoff valve open or closed.

REFUELING/DEFUELING (Cont)

GROUNDING RECEPTACLES

Receptacles for grounding the aircraft to the refueling equipment are provided as follows:

- Adjacent to each gravity filler port
- Adjacent to the pressure refueling coupling
- Nose gear stud

SYSTEM TEST

The automatic pressure refueling, manual pressure refueling and automatic defueling procedures can be used after satisfactory tests on the refuel/defuel system. The tests are to verify that all panel lamps operate correctly, the SOVs operate correctly in manual and automatic modes.

Test the panel lamps with the following procedures:

- Select power switch ON
- Push Lamp Test button and verify all panel indication lamps illuminate
- Connect fuel nozzle to the refuel/defuel adapter to supply fuel pressure
- Select TEST position on the fuel selector switch
    - Verify H. LEVEL DETECTOR, SOV CL and OP lamps illuminate
- Select OFF position on the fuel selector switch
    - Verify that only the SOV OP lamps illuminate

Test the SOV operation with the following procedures:

- Select FUEL AUTO position with the fuel selector switch and the two SOV toggle switches OFF
    - Verify SOV indication lamps are off
- Select FUEL AUTO position with the fuel selector switch and the two SOV toggle switches ON
    - Verify SOV indication lamps illuminate OP
- Select TEST position with the fuel selector switch and the two SOV toggle switches ON
    - Verify SOV lamps illuminate CL

HIGH-LEVEL SENSORS

The high-level sensors provide the fuel computer with a tank full signal, and provides for a 3% expansion space. When the high-level sensor signals the computer a full condition during refueling operations, the computer closes the respective refuel shutoff valve.

REFUEL/DEFUEL SINGLE-POINT ADAPTER

The refuel/defuel single-point adapter lets the operator connect the refueling nozzle to the aircraft to refuel or defuel. The adapter is installed in the right fuselage fairing just forward of the right wing.

GRAVITY REFUELING

Gravity refueling is accomplished only in exceptional circumstances. The refueling process is done through the filler ports located on the upper wing surfaces. Due to the shallow depth of the wing at the location of the filler cap, a protective plate is provided in the tank in order to avoid damage to the bottom skin by the refueling nozzle.

The gravity filler port and cap for each wing tank is located approximately mid-wing.

WARNING: Gravity filler caps for the wing tanks are located below the maximum pressure refueling level. Never remove the gravity filler caps if the wing tanks are full or fuel quantity is unknown.

FUEL INDICATION AND CONTROL

DESCRIPTION

The fuel indication and control system provides fuel quantity indication and control of refuel and defuel functions. The system consists of the fuel quantity gaging computer, fuel quantity probes, fuel temperature probes, fuel level sensors, and the refuel/defuel panel.

COMPONENTS AND OPERATION

FUEL QUANTITY PROBES

Nine fuel quantity probes are distributed throughout each wing tank. The probes provide fuel level indications to the fuel quantity gaging computer.

FUEL TEMPERATURE PROBE

The fuel temperature probe is located in the right wing tank and provides temperature information to the fuel indicating system.

FUEL LEVEL SENSORS

A tank full fuel level sensor is located at the top of each tank. This sensor provides a cutoff signal to the refuel valve when the tank is full.

FUEL QUANTITY GAGING COMPUTER

The fuel quantity gaging computer provides the following functions:

- Fuel quantity probe, fuel density probe, fuel level, fuel temperature, and sensor signal processing. The fuel computer uses weight-off-wheels indications and pitch and roll attitude from the AHRS to correct the fuel quantity probe data and display accurate fuel quantity information on the EFIS.
- Failure monitoring and indication to EICAS and the maintenance diagnostic computer.
- Automatic control of refueling and defueling when selected.
- Engine oil level indication to the refuel/defuel panel.

REFUEL/DEFUEL CONTROL PANEL

Pressure refueling and suction defueling can be conducted using the single-point fuel port and the refuel/defuel panel, both located in the right wing root leading-edge fairing. The controls allow the required total fuel load to be preselected and automatically controlled by the fuel system computer. Alternatively, the quantity of fuel loaded into the aircraft can be manually controlled from the refuel panel. A high-level sensor is provided in each tank to prevent the tanks from being overfilled if the automatic or manual refuel control fails. For testing the operation of the refuel shutoff valve, a control allows high-level sensor operation to be simulated electrically and checks the refuel valves closure.

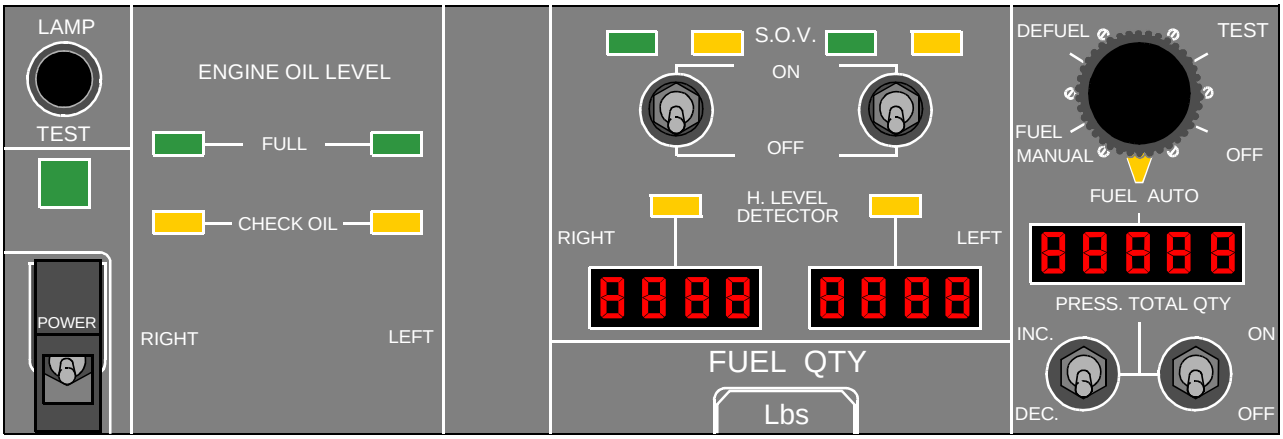

FUEL INDICATION AND CONTROL (Cont)

FUEL QUANTITY GAGING

DESCRIPTION

Fuel quantities are displayed in lbs or kg on the EICAS and FUEL synoptic displays.

COMPONENTS AND OPERATION

FUEL COMPUTER

The dual-channel fuel system automatically calculates the quantity of fuel in the wing tanks. Each channel receives signals from the fuel system and aircraft attitude information from the AHRS. The computer uses the information to calculate the fuel weight in each tank.

CONTROLS AND INDICATION

DESCRIPTION

The FUEL control panel provides control and system indications for the fuel system. The panel controls the boost pumps and provides manual control and indications of the gravity and powered crossflow system.

Fuel system information is presented on the EICAS and FUEL synoptic pages. Fuel temperature is displayed in degrees celsius and quantity is displayed in pounds or kilograms.

The refuel/defuel control panel controls all of the refueling and defueling operations. It tests the integrity of the components of the fuel system and displays individual fuel tank quantities.

FUEL CONTROL PANEL

L (R) PUMP, GRAVITY XFLOW, and XFER are selected on the FUEL control panel.

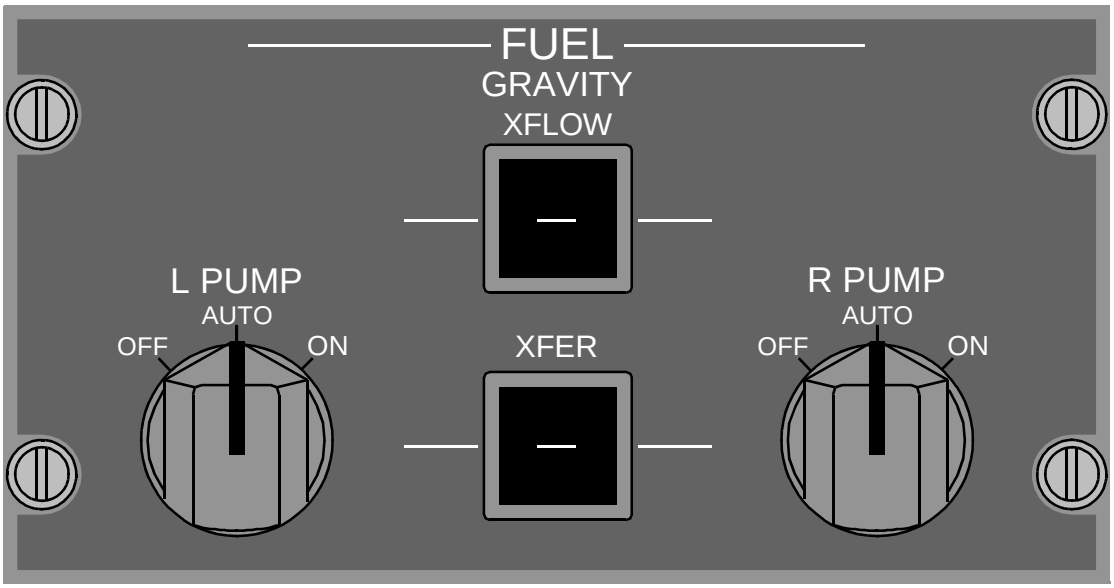

CFO1201002_004

CONTROLS AND INDICATION (Cont)

FUEL DISPLAY

The fuel display synoptic page presents digital indications of fuel flow and quantity.

Fuel flow is indicated in either pounds per hour (PPH) or in kilograms per hour (KPH). Magenta dashes will be displayed if the input value is invalid.

Fuel tank quantity for the left and right fuel tanks are presented in pounds or kilograms.

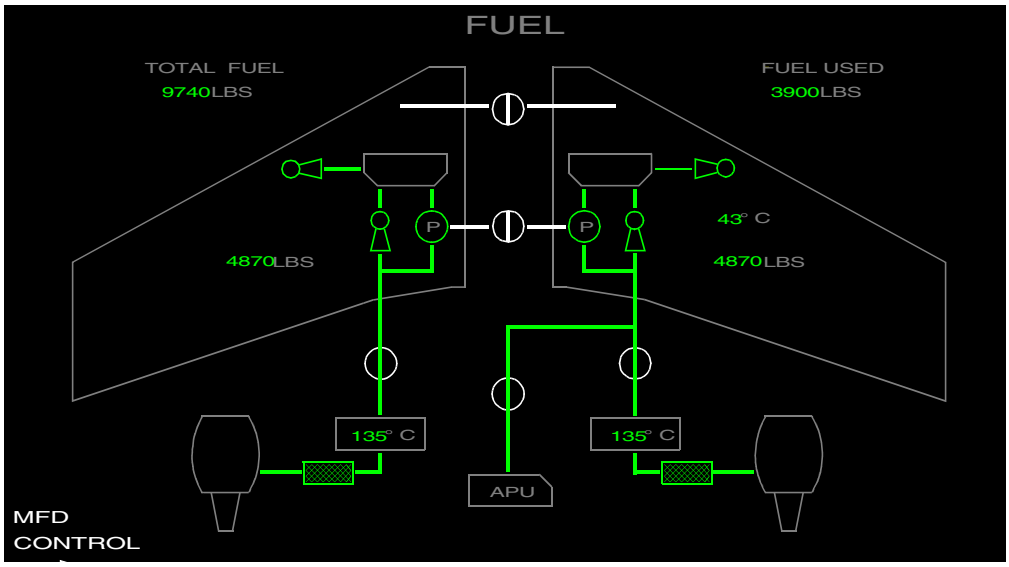

FUEL TEMPERATURE READOUTS

Bulk fuel temperature readout indicates the temperature of the fuel in the right wing. Green readouts indicate temperatures above -38.3 °C (-36.9 °F), while a WING FUEL TEMP LOW(C) CAS message indicates -38.2 °C (-36.7 °F) or below.

FUEL QUANTITY INDICATIONS

TOTAL FUEL

Green digits indicate total fuel quantity over 600 lb (272 kg) and each wing over 300 lb (136 kg).

LEFT OR RIGHT WING TANKS

Amber digits and a FUEL IMBALANCE (C) CAS message will illuminate if the following conditions exist:

- 250 lb (113 kg) or more with a total fuel weight of more than 13 700 lb (6214 kg)
- 315 lb (143 kg) or more with a total fuel weight between 13 700 (6214 kg) and 10 000 lb (4536 kg)
- 450 lb (204 kg) or more with a total fuel weight between 10 000 lb (4536 kg) and 4700 lb (2132 kg)
- 600 lb (272 kg) or more with a total fuel weight of less than 4700 lb (2132 kg)

FUEL USED

This indication shows the amount of fuel used since the counter was reset. The reset is carried out automatically on powerup by the FADEC. Magenta dashes indicate the input data is invalid.

CONTROLS AND INDICATION (Cont)

FUEL SYNOPTIC PAGE

The EICAS synoptic page displays a pictorial view of the system operation.

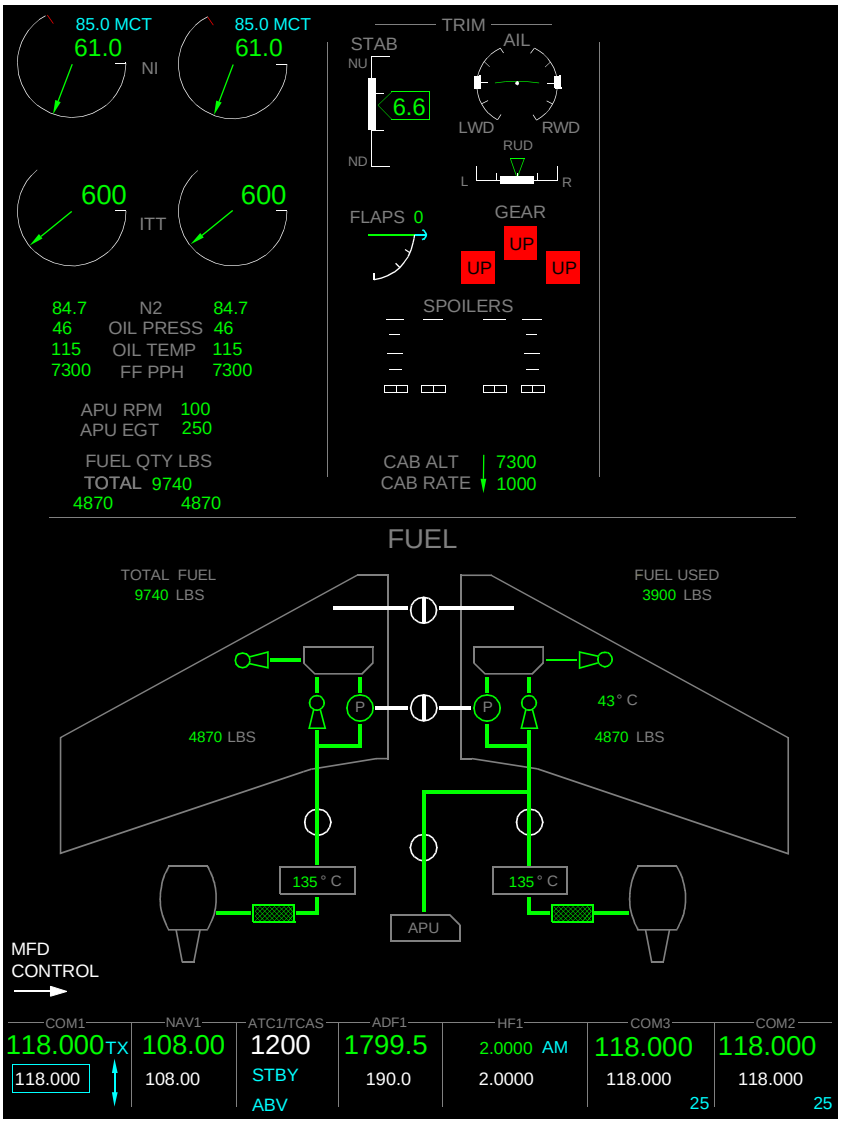

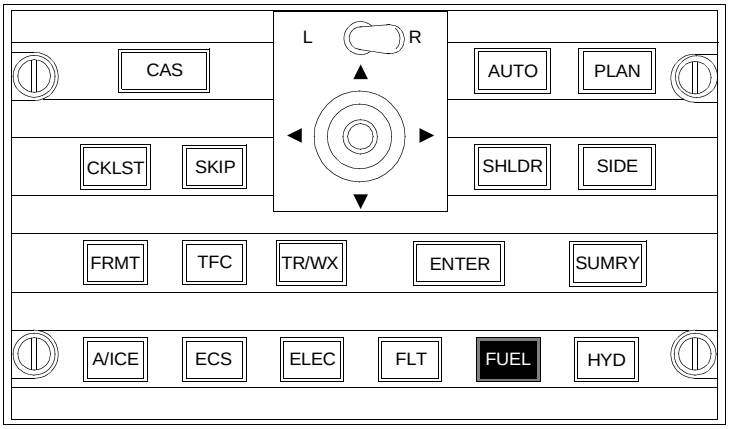

CFO0305002_013

EICAS MESSGAES

The fuel system messages are shown on the EICAS. In the table below, the fuel system messages and inhibits are listed. A brief explanation of each messages is provided.

MESSAGE	INHIBITS	MEANING	AURAL WARNING
L (R) ENG FUEL SOV FAIL	TO/LAND	The respective engine fuel shutoff valve has failed to close when commanded	
L (R) FUEL COLLECTOR LOW	TO	The fuel collector tank quantity is less than 200 pounds	
L (R) FUEL EJECTOR FAIL	TO/LAND	The affected ejector pump has failed to provide sufficient pressure.	
FUEL IMBALANCE	TO/LAND	The wing fuel imbalance is greater than: - 250 lb (113 kg) with a total fuel weight of more than 13 700 lb (6214 kg) - 315 lb (143 kg) with a total fuel weight between 13 700 lb (6214 kg) - 450 lb (204 kg) with a total fuel weight between 10 000 lb (4536 kg) - 600 lb (272 kg) with a total fuel weight of less than 4700 lb (2132kg)	
L (R) FUEL PRESSURE LOW		The engine fuel pressure is below 6 psig	
L (R) FUEL PUMP FAIL	TO/LAND	The respective electric fuel pump has failed	
FUEL QUANTITY FAIL	TO/LAND	Both channels of the fuel quantity gauging computer have failed. fuel quantities will be indicated as magenta dashes on the EICAS	
FUEL QUANTIT Y LOW		Total fuel quantity is 300 lb (136 kg) or less in either wing, when the aircraft is in unaccelerated level flight	
WING FUEL TEMP LOW	TO/LAND	Fuel temperature in the wing is below -38 °C (-36 °F)	
L (R) FUEL EJECTOR FAIL	TO/LAND	The affected ejector pump has failed to provide sufficient pressure. The electric fuel pump should automatically turn on to provide sufficient fuel pressure.	
FUEL GRAV XFLOW FAIL	TO/LAND	The wing fuel gravity crossflow valve is not fully opened or closed as commanded	
L (R) FUEL PUMP ON		The respective electric fuel pump has been automatically turned on	

EICAS MESSAGES (Cont)

MESSAGE	INHIBITS	MEANING	AURAL WARNING
FUEL QUANTITY FAULT	TO/LAND	The left or right channel has detected a fault or loss of temperature compensation	
FUEL XFER FAIL	TO/LAND	The fuel transfer valve has failed	
L (R) ENG FUEL SOV CLOSED		Respective engine fuel shutoff valve is closed	
FUEL BALANCED	TO/LAND	The fuel is balanced within 100 lb with the FUEL XFER valve open	
FUEL GRAV XFLOW OPEN		Wing fuel gravity crossflow valve is open	
L (R) FUEL PUMP OFF		The respective fuel pump is OFF	
L (R) FUEL PUMP ON		The respective fuel pump is ON	
FUEL XFER OPEN		The fuel transfer valve is open	

Table of Contents

Introduction 13-01-01
Left and Right Hydraulic System 13-01-01
Description 13-01-02
Components and Operation 13-01-03
Engine-Driven Pumps 13-01-03
DC Motor-Driven Pump 13-01-03
Hydraulic Shutoff Valve 13-01-03
Hydraulic Reservoir 13-01-03
Ecology Bottle 13-01-04
Unloading of Hydraulic Pump for Inflight Restarts 13-01-04
Left and Right Hydraulic System Cooling 13-01-04
Hydraulic Reservoir Quantity Percentages 13-01-04
Left Hydraulic System Schematic 13-01-05
Right Hydraulic System Schematic 13-01-06
Auxiliary Hydraulic System 13-01-07
Description 13-01-07
Components and Operation 13-01-07
Auxiliary DC Motor-Driven Pump 13-01-07
Auxiliary Hydraulic System Accumulators and Reservoir 13-01-07
Auxiliary System Switching Valve 13-01-07
Auxiliary System Pressure Filter 13-01-07
Power Transfer Unit 13-01-08
Description 13-01-08
Components and Operation 13-01-08
Hydraulic Servicing 13-01-08
Description 13-01-08
Hydraulic Servicing Panel 13-01-09
Auxiliary Accumulator Servicing 13-01-10
Auxiliary Hydraulic System Schematic 13-01-11
Controls and Indications 13-01-12
Description 13-01-12
Hydraulic Control Panel 13-01-12
Hydraulic Synoptic Page 13-01-13
EICAS Messages 13-01-14

INTRODUCTION

The Challenger 300 has a left and right hydraulic system that are independent from each other, and an auxiliary system that is tied to the right hydraulic system. The left, right, and auxiliary systems are controlled from the HYDRAULICS panel, located immediately to the right of the throttle quadrant on the center pedestal. The hydraulic systems normally operates at 3000 psi and uses Fire Resistant Phosphate Ester based MIL-H-5440 Type II fluid. The left and right hydraulic systems are both powered by Engine-Driven Pumps (EDPs) which are backed up by a DC Motor-driven Pumps (DCMPs). The left and right hydraulic systems DCMPs are powered by the electrical DC bus supplied by the generator on the engine opposite the engine which drives the EDP. Thus, hydraulic power is provided for the left and right systems after any single engine failure. After the loss of the left and right hydraulic systems, the lower rudder PCU will be powered by the AUX hydraulic system.

The L DCMP is powered by the R MAIN DC bus. There is no battery backup for the R MAIN DC bus. If the right DC generator fails, the R MAIN DC bus can be powered by the L DC generator or the APU.

The R DCMP is powered by the L ESS bus. The bus can be powered by the right dc generator or the APU if the left DC generator fails. If no generators are operational, the R DCMP will only automatically start if the pilot selects the flaps to a non-zero position. If only one generator is operational on the airplane, then only one of the L or R DCMPs is operational, (one DCMP is load shed from the good hydraulic system with the R DCMP taking priority over the left DCMP if both EDPs are failed). AUX DCMP is not load shed for single generator operation.

The AUX DCMP is powered by the L ESS bus. There is battery backup for this bus, but the battery size is limited and only powers this DCMP for the last few minutes of flight. The L ESS bus can be powered by the R DC generator or the APU if the L DC generator fails.

In case of total generator failure, the pilot can select the AUX DCMP off until just prior to landing to conserve battery power. The elevators will be in manual reversion, and the rudder will also be in manual reversion if the auxiliary hydraulic system fails. In addition, roll assist with roll spoilers will be lost. The ailerons are strictly manually controlled through cables and pulleys. Due to the loss of flaps, thrust reversers, and lift dumping devices, the aircraft landing distances will be significantly increased.

LEFT AND RIGHT HYDRAULIC SYSTEM

DESCRIPTION

The major components of the left and right hydraulic system are: Engine-Driven Pumps (EDPs), DC Motor Pumps (DC-MPs), Firewall Shutoff Valves (SOVs), control valves, fluid reservoirs, and sensors for monitoring and control for each system. The left and right hydraulic systems each have separate fuel/hydraulic fluid heat exchangers in their respective wing fuel tank. With the exception of the EDPs, and heat exchangers, the major components are located in the aft equipment compartment. The EDPs are mounted on the engine accessory gearboxes.

LEFT HYDRAULIC SYSTEM:	RIGHT HYDRAULIC SYSTEM:	AUX HYDRAULIC SYSTEM:
Multi-functional spoilers (inboard)	Multi-functional spoilers (outboard)	Lower Rudder PCU
Ground spoilers (inboard)	Ground spoilers (outboard)	
Rudder (upper PCU)	Rudder (lower PCU)	
Left thrust reverser	Right thrust reverser	
Inboard brakes, emergency	Outboard brakes	
Nose wheel steering actuator	Main landing gear assist actuators	
Elevator (inboard PCUs)	Elevator (outboard PCUs)	
Alternate FLAPS	Normal FLAPS supply	
Landing Gear	Power transfer unit	

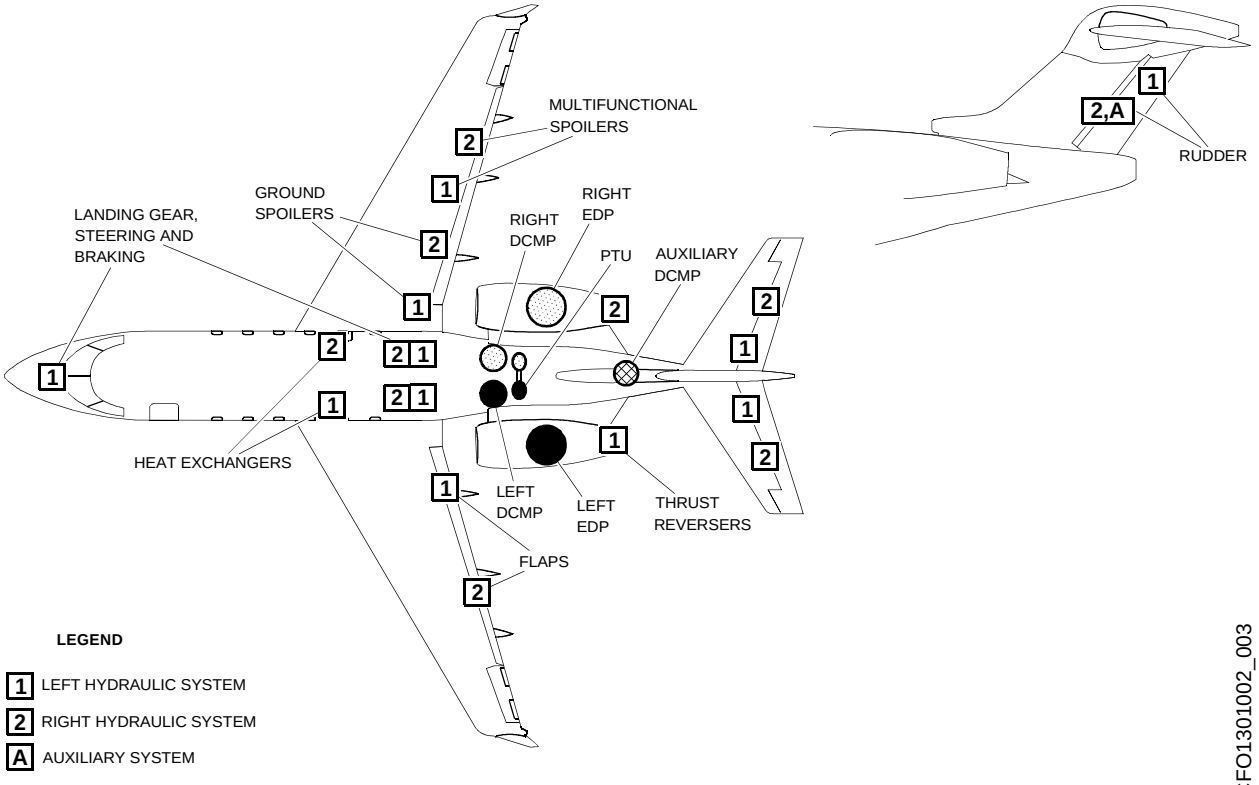

CFO1301002_003

LEFT AND RIGHT HYDRAULIC SYSTEM (Cont)

COMPONENTS AND OPERATION

ENGINE-DRIVEN PUMPS

The left and right hydraulic systems are each powered by an Engine Driven Pump (EDP). It is flange-mounted to the engine gearbox and driven through a splined input shaft. The pumps are a variable-delivery, piston type, that maintain a nominal system pressure of 3000 psi. The EDPs operate any time the engines are turning. Pressure switches located in the pump outflow lines provide low-pressure indications to the flight crew. The discharge, suction and case drains ports of the pump include quick-disconnect fittings and are connected directly to the aircraft systems through hoses. The case drain port is located on the top side of the pump near the mounting flange for maximum case drain cooling of pump components. This location also assures bleeding of air after installation of a new pump. The pump incorporates a solenoid isolation/actuation valve to reduce discharge pressure and torque when energized. During an engine windmill restart, the solenoid will be activated by the FADEC to depressurize the pump.The left EDP flow and left DCMP flow combines in the left filter manifold. The right EDP flow and right DCMP flow combines in the right filter manifold. The hydraulic fluid is never mixed between the left and right systems.

DC MOTOR-DRIVEN PUMP

The left and right hydraulic systems each have one DC Motor-driven Pump (DCMP). The primary purpose of the DCMPs is to pressurize the hydraulic systems during an engine or EDP failure. The DCMP serves also the ground maintenance operation purposes. The DCMP contains a DC electric motor which is attached to a variable-delivery hydraulic pump. The DC motor operates the pump, which can change the volume of fluid flow to maintain the necessary system pressure. The left and right hydraulic system DCMPs are installed on their respective side of the aft equipment compartment.

Electrical power is supplied by the DC bus through an electrical connector on the DCMP. The generator of the right engine supplies power to the left DCMP. The generator of the left engine supplies power to the right DCMP.

The left and right DCMPs are each controlled by a three-position switch. The switch positions are OFF, AUTO, and ON. The OFF and ON allow manual operation. The AUTO position is the normal position for flight. In this position, the DCMPs will be off with flaps up, and on with flaps set at 10° or greater. In addition, if low hydraulic system pressure is detected, the DCMP will automatically turn on.

HYDRAULIC SHUTOFF VALVE

Each of the left and right hydraulic systems contain a firewall shutoff valve (SOV) placed in the EDP suction line outside of the pylon area. In the case of engine fire, this valve can be closed to stop hydraulic fluid from reaching the engine area. Both SOVs are located inside the aft equipment compartment forward of the hatch opening. The valves are normally in the open position, however, pressing the L (R) SOV push button on the HYDRAULIC control panel or the L (R) ENG FIRE push button on the ENGINE control panel closes the corresponding hydraulic shutoff valve. Control logic also closes the valve automatically when the system fluid temperature exceeds 275 °F. When a firewall SOV is operated, the DCMPs are the only hydraulic pressure source available for the left or right hydraulic systems.

HYDRAULIC RESERVOIR

Each of the hydraulic systems contains a reservoir for the storage of hydraulic fluid. The reservoir provides the necessary fluid volume demanded by the hydraulic system, including pressurization of the pump inlet. Changes in the fluid volume due to thermal expansion/contraction, system leakage and differential area of the user actuators have been taken into account in sizing and volume of each reservoir. The left and right hydraulic system reservoirs are installed on their respective sides in the aft equipment compartment. The fluid volume of the left hydraulic reservoir is 13 quarts (12.3 liters). The fluid volume of the right hydraulic reservoir is 9.1 quarts (8.6 liters). Each reservoir has a bleed/relief valve, visual quantity indicator, suction shutoff valve, and ports for installation of the temperature switch and temperature transducer. There is also a check valve installed in the fluid return port.

The bleed valve is accessible to maintenance personnel and is manually opened by depressing a lever. When released, the lever automatically returns to the closed position. The location of the valve at the high point of the reservoir, as well as the routing of the internal porting to the valve, assures that air in the fluid will migrate to the outlet and be released when the valve is opened. Flow from the valve is routed to the ecology bottle.

LEFT AND RIGHT HYDRAULIC SYSTEM (Cont)

The visual quantity indicator is a gauge that shows the hydraulic fluid level in the reservoir. The gauge has marks from zero to 100% in increments of 10%. The indicator senses the position of the low-pressure piston as a measure of the remaining fluid volume. The quantity indicator also sends an electrical output signal to the Remote Data Concentrator (RDC), which shows fluid quantity on the hydraulic synoptic page, and on the copilot's MFD hydraulic summary page.

The suction shutoff valve is installed in the pump suction port of the reservoir. This shutoff valve is closed by the reservoir piston when the fluid level is almost empty. This prevents fuel from being pumped into the hydraulic system if there is a break in a hydraulic line inside the fuel tank.

ECOLOGY BOTTLE

The left and right hydraulic systems each contain an ecology bottle installed in the lower part of the rear fuselage. The ecology bottles collect hydraulic fluid leakage from the DCMP shaft seals, PTU seal drain port, and the reservoir bleed/relief valves. The bottles are transparent in order to see the level of the hydraulic fluid inside.

UNLOADING OF HYDRAULIC PUMP FOR INFLIGHT AIRSTARTS

The engine driven pump incorporates a depressurization circuit to unload the pump and reduce the input torque required during engine relights. Also when the reservoir fluid temperature reaches 275 °F, the PSEU will command the FADEC to depressurize the engine driven pump. The DCMP will also automatically continue providing hydraulic pressure to other systems after the EDP stops functioning. No action is required of the flight crew, as the above procedures are automatic.

LEFT AND RIGHT HYDRAULIC SYSTEM COOLING

The left and right hydraulic systems require cooling due to heat generated by the EDPs and other heat sources within the engine nacelle. The left and right hydraulic systems have a fuel/hydraulic heat exchanger in each wing tank.

A thermostatically controlled bypass valve is installed between the heat exchanger inlet and outlet line on each hydraulic system. The valve controls the flow of pump case drain fluid to the heat exchanger as a function of fluid temperature. It also acts as a thermal bypass valve if pressure drop through the heat exchanger becomes excessive.

At fluid temperatures above 125 °F the valve is in the full open mode and routes all incoming fluid through the heat exchanger to provide cooling. Below 125 °F the valve is in the bypass mode and routes all incoming fluid around the heat exchanger and directly to the reservoir. If 275 °F is detected for more than 3 seconds, the SOV will close and a L (R) HYD TEMP HIGH (C) CAS message will be illuminated.

HYDRAULIC RESERVOIR QUANTITY PERCENTAGES

The hydraulic reservoir quantity percentages are displayed in 2% increments on the Summary page and Hydraulic Synoptic page. When the quantity levels are within normal range (as shown in the table below), the quantity percentages will be displayed in green. When the hydraulic systems levels are above or below normal, the percentages will be displayed in white. Approximately 25% of the fluid is in the landing gear hydraulic lines and actuators when the gear is down, so quantity percentages will show lower but usually stay in the normal range. When the gear is retracted, the fluid level percentages will climb but still stay in the normal range. If the system percentage is less than the normal lower level, it will display the percentage in white and it should be serviced prior to flight. If the left system has been over serviced, it may port excess fluid through the left system reservoir relief valve when the landing gear is retracted. There are no CAS messages associated with percentages that are above or below normal levels.

	LEFT SYSTEM	RIGHT SYSTEM	AUXILIARY SYSTEM
NORMAL UPPER LEVEL PERCENTAGES	85%	85%	85%
NORMAL LOWER LEVEL PERCENTAGES	30%	40%	20%

LEFT AND RIGHT HYDRAULIC SYSTEM (Cont)

LEFT HYDRAULIC SYSTEM SCHEMATIC

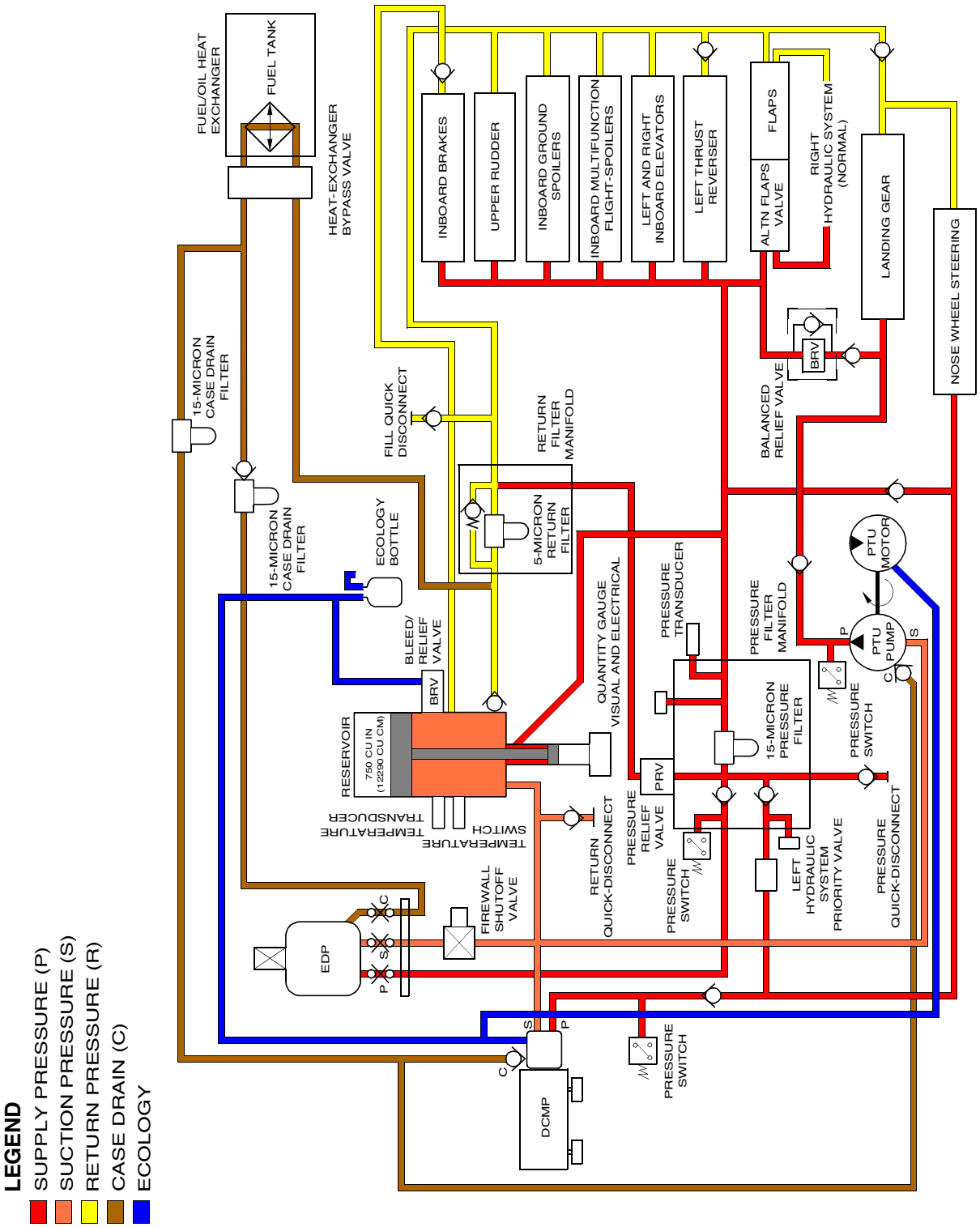

LEFT AND RIGHT HYDRAULIC SYSTEM (Cont)

RIGHT HYDRAULIC SYSTEM SCHEMATIC

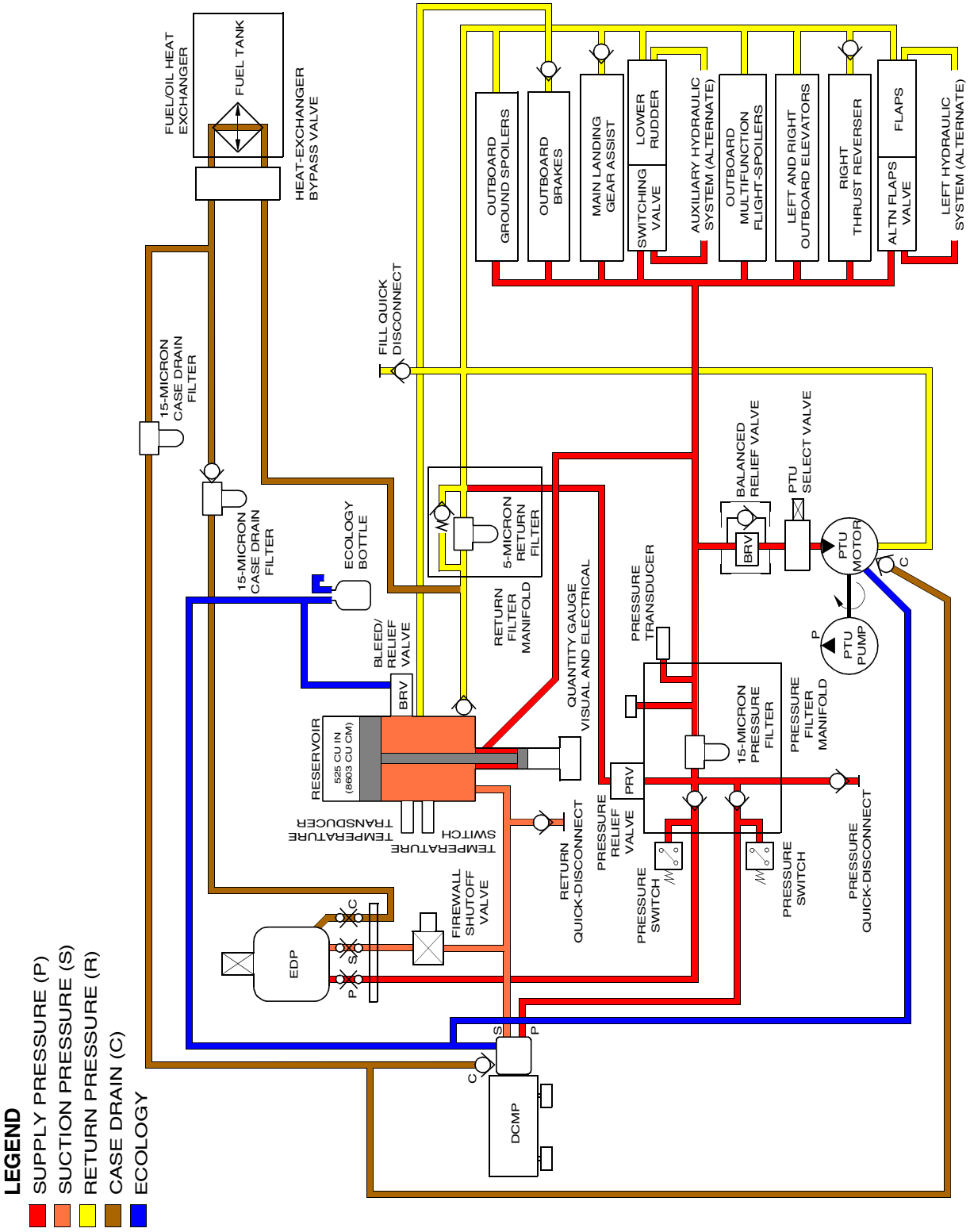

AUXILIARY HYDRAULIC SYSTEM

DESCRIPTION

The purpose of the auxiliary hydraulic system is to provide hydraulic pressure to the lower rudder PCU as a result of the right hydraulic system failure. The auxiliary hydraulic system includes a DCMP, a reservoir, and an accumulator, all located aft of the engine rotor burst zone. The right hydraulic system normally powers the lower rudder PCU. During a loss of right system pressure, a hydraulic switching valve allows the auxiliary system to provide pressure to the lower rudder PCU. The left or right hydraulic system may be activated without the system already being pressurized. However, the auxiliary system has an intensifier pressurized by the right hydraulic system. During the preflight check, select R PUMP ON before selecting AUX PUMP to AUTO to prevent cavitation.

The auxiliary hydraulic system pressure is generated by a constant displacement DCMP. The pump is controlled by a two position AUX PUMP switch. The OFF position disables the pump. In the AUTO position, a pressure switch allows the pump to activate as needed.

COMPONENTS AND OPERATION

AUXILIARY DC MOTOR-DRIVEN PUMP

The auxiliary DCMP function is to maintain fluid pressure on the auxiliary system accumulator. When the system pressure decreases to 2500 psi, an external pressure switch turns on the pump until pressure has reached 3350 psi. At that time, the pressure switch deactivates, commanding the pump off.

AUXILIARY HYDRAULIC SYSTEM ACCUMULATORS AND RESERVOIR

The auxiliary system accumulator has a nominal gas volume for 50 cubic inches of dry nitrogen, to satisfy the instantaneous demands of the hydraulic pressure and dampen out pressure surges with in the system. The pre-charge pressure versus temperature is set so that when the accumulator is discharged, the accumulator will still have sufficient oil for a smooth continuous operation of the lower rudder as the pump comes on line at approximately 2500 psi.

The auxiliary system uses an intensifier to augment the inlet pressure to the auxiliary DCMP to prevent pump cavitation. The intensifier is a simple spring-loaded piston that transmits pressure from the RH system to the pressure side of the auxiliary system reservoir. The DC pumps will come on prior to the engines starting and supply the intensifier with pressure. The AUX DCMP will come on if the AUX DCMP is selected to AUTO, there is power to the aircraft, and the aux system accumulator pressure is low. Once the AUX DCMP pressurizes, it is self-priming and its operation is independent of the RH system.

AUXILIARY SYSTEM SWITCHING VALVE

The function of the auxiliary system switching valve is to transmit right hand system pressure to the lower rudder PCU under normal operating conditions. With loss of RH hydraulic system pressure, the switching valve shuttles and applies Auxiliary System pressure to the lower rudder PCU. The valve shuttles strictly in accordance with the RH System pressure and does not rely on any software or electrical interface to function.

AUXILIARY SYSTEM PRESSURE FILTER

The aux system contains a pressure filter. This assembly filters the supply pressure fluid coming in from the DCMP. It is made up of a filter element and a bowl, a differential pressure indicator, and an automatic shutoff device. The filter is a non-bypassing design. The flow through the assembly is blocked when the bowl is removed. A filter element is provided which removes 100% of all contaminants larger than 15 microns and is a non-cleanable type. The auxiliary system pressure filter and the case drain filter element used on the filter manifolds of the left and right systems are identical, and interchangeable.

POWER TRANSFER UNIT

DESCRIPTION

The Power Transfer Unit (PTU) consists of a hydraulic motor coupled mechanically through a drive shaft to a hydraulic pump. When the PTU selector valve is energized, the hydraulic motor is driven by pressure from the right hydraulic system. The pump side of the PTU is connected to the left system and is dedicated to operation of the landing gear. The PTU also provides pressurization for the left hydraulic system reservoir.

When the PTU selector valve is energized, the hydraulic motor is driven by pressure from the right hydraulic system. The PTU is connected to the left hydraulic system and is dedicated to retracting and extending the landing gear. The PTU is used for gear operation when the left EDP system or left engine is not operational. Should the left engine fail during takeoff, gear retraction time will be excessively slow using the DCMP, however, with the PTU engaged gear retraction time will be normal. A priority valve is placed upstream of the PTU to protect the right system pressure from being pulled down to unacceptable levels due to excessive flow demand from the PTU.

COMPONENTS AND OPERATION

The PTU is controlled by a three-position switch. The switch positions are OFF, AUTO, and ON. In the OFF and ON positions, the PTU valve is manually closed or open.

In the AUTO mode:

- the PTU will only start when the left engine or the left EDP is inoperative or failed
- the right EDP is producing pressure
- the gear is not in its commanded position
- and the aircraft is in the air.

The PTU will allow the gear to operate at its normal rate with only a slight increase in transit time due to delays associated with the PTU solenoid being commanded on, solenoid energizing, and the PTU coming up to speed.

If the PTU, is selected to AUTO and does not produce hydraulic pressure within 15 seconds, it will be latched OFF to minimize the load placed on the right hydraulic system. The latch will only be reset if AUTO mode is de-selected by the cockpit crew or power is removed from the Proximity Sensor Electronics Unit (PSEU).

The PTU can also be manually selected ON by the cockpit crew. If only the right DCMP is operational, the landing gear may be extended using the main landing gear assist system rather than using the PTU in the left system.

HYDRAULIC SERVICING

DESCRIPTION

The left and right hydraulic systems each have ground service quick-disconnects for ground fill, pressure and return fluid circuits. These are used for ground maintenance tasks such as system bleeding, flushing, draining and ground pressurization. The auxiliary system filler has a quick-disconnect to add hydraulic fluid to the auxiliary reservoir. The quick disconnects are installed on panels near the system access doors.

HYDRAULIC SERVICING (Cont)

HYDRAULIC SERVICING PANEL

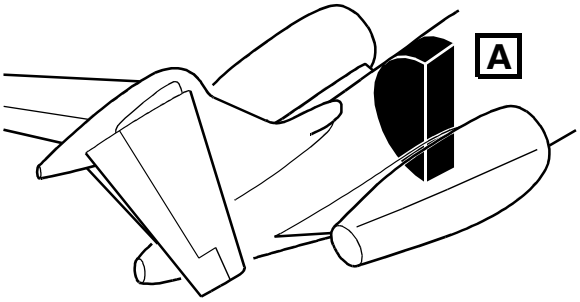

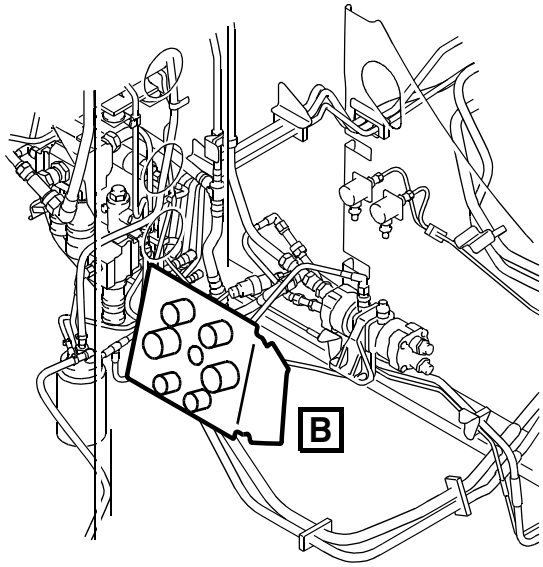

A

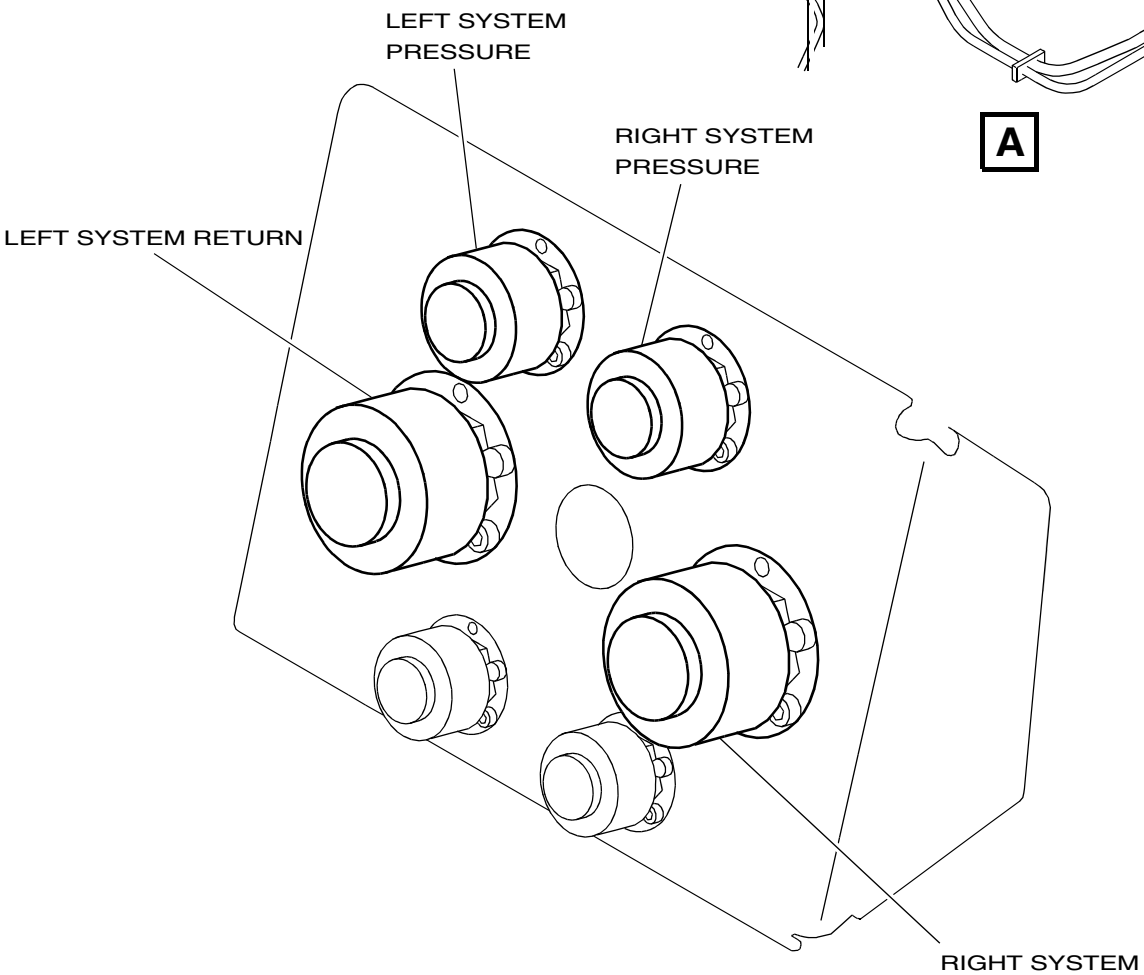

HYDRAULIC SERVICING PANEL

B

CFO1301002_007

HYDRAULIC SERVICING (Cont)

AUXILIARY ACCUMULATOR SERVICING

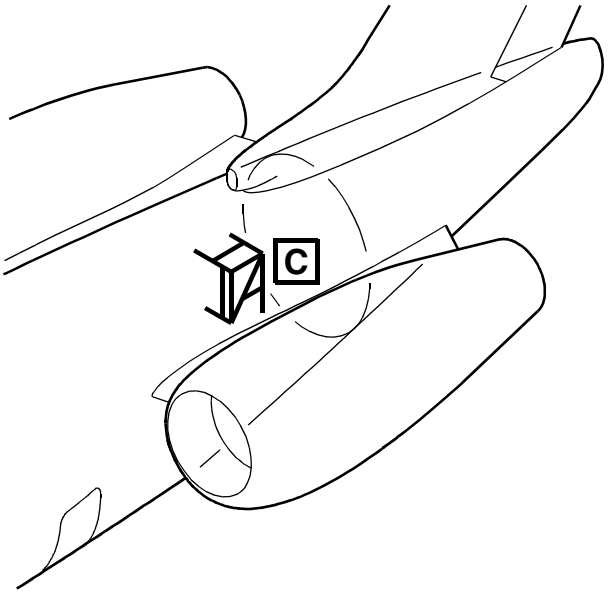

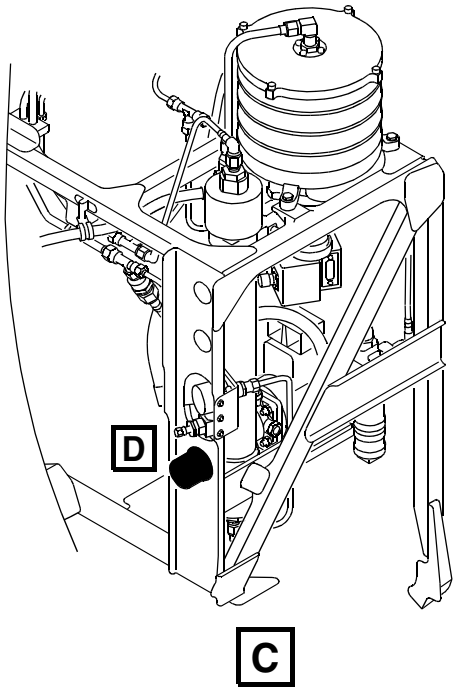

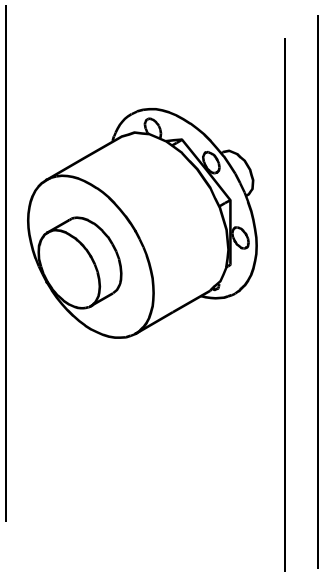

AUXILLARY ACCUMULATOR SERVICING

D

CFO1301002_008

AUXILIARY HYDRAULIC SYSTEM SCHEMATIC

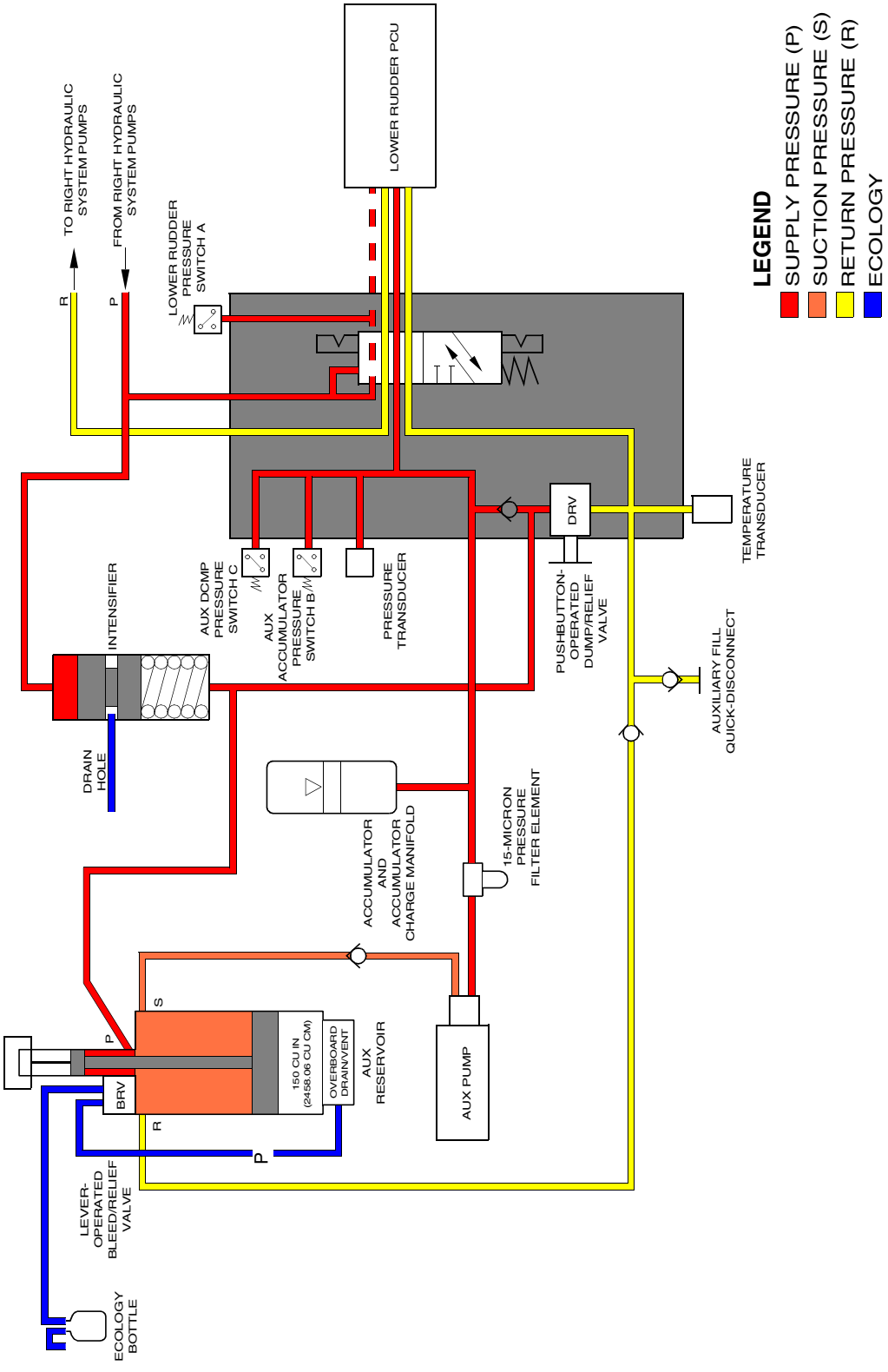

CONTROLS AND INDICATIONS

DESCRIPTION

The hydraulic control panel is located immediately to the right of the throttle quadrant on the center pedestal. From the hydraulic control panel the electric hydraulic pumps, shutoff and selector valves, and power transfer unit can be manually operated. The Engine Indicating and Crew Alerting System (EICAS) monitors and displays the hydraulic system information.

HYDRAULIC CONTROL PANEL

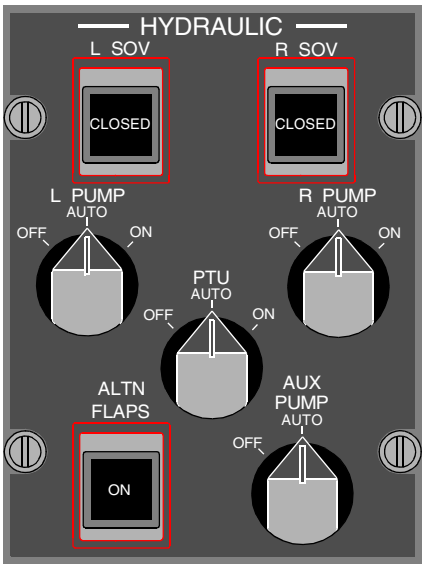

CFO1301002_006

CONTROLS AND INDICATIONS (Cont)

HYDRAULIC SYNOPTIC PAGE

The hydraulic system operation is monitored and status displayed on the hydraulic synoptic page.

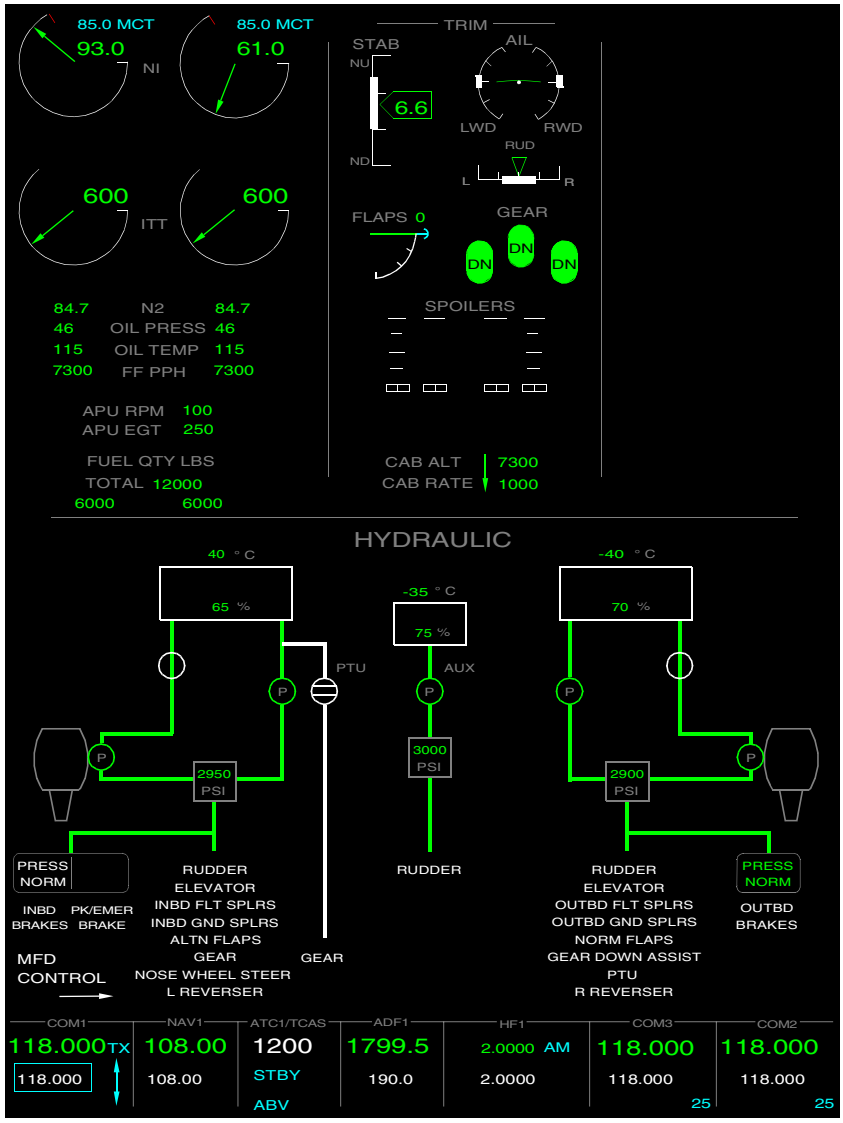

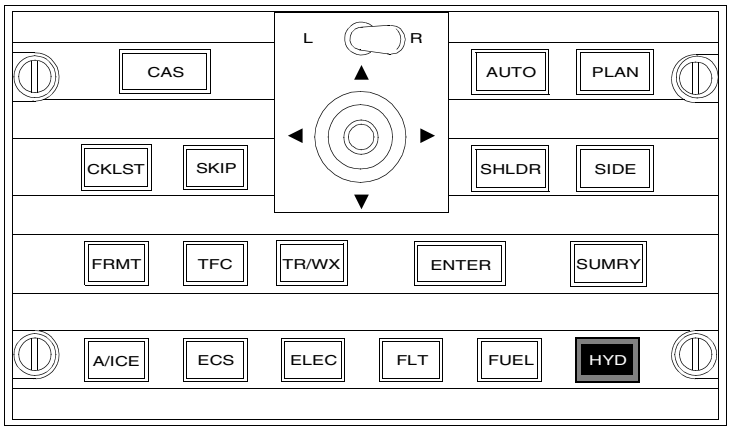

CFO0305002_014

EICAS MESSAGES

The hydraulic system messages are shown on the EICAS. In the table below, the hydraulic system messages and inhibits are listed. A brief explanation of each message is provided.

MESSAGE	INHIBITS	MEANING	AURAL WARNING
HYD PRESS LOW		The left and right hydraulic pressures are less than 1800 psi	
AUX HYD TEMP HIGH	TO/LAND	The auxiliary hydraulic fluid system temperature is greater than 135 °C	
L (R) HYD PRESS LOW	TO/LAND	The affected hydraulic system pressure is less than 1800 psi	
HYD PTU FAIL	TO/LAND	The power transfer unit is not producing pressure when it should be	
L (R) HYD SOV FAIL	TO/LAND	The respective hydraulic shutoff valve did not close when one of the following occurred: - The respective ENG FIRE switch was pressed - The respective HYDRAULIC SOV switch was selected CLOSED - The automatic overtemp closure was commanded Or the respective hydraulic SOV is CLOSED when it should be Open	
L (R) HYD TEMP HIGH	TO/LAND	The respective hydraulic system temperature is above 100 °C	
AUX HYD SYS FAIL	TO/LAND	The auxiliary hydraulic pump is not producing pressure when it should	
AUX HYD PUMP FAIL ON	TO/LAND	The auxiliary hydraulic pump is running continuously	
L (R) HYD DC PUMP FAIL	TO/LAND	The respective hydraulic pump is not producing pressure when it should	
L (R) HYD ENG PUMP FAIL	TO/LAND	The respective hydraulic pump is not producing pressure when it should	
HYD PUMP NOT AUTO		At least one of HYDRAULIC PUMP (L,R, PTU, or AUX) switch is not in the AUTO position	
L (R) HYD SOV CLOSED		The respective hydraulic shutoff valve is closed	

Table of Contents

Introduction 14-01-01
Ice Detection System 14-01-02
Description 14-01-02
Components and Operation 14-01-02
Wing Anti-Ice System 14-01-03
Description 14-01-03
Components and Operation 14-01-03
Integrated Air System Controller (IASC) 14-01-03
Bleed Leak Detection System 14-01-03
Wing Temperature Sensors 14-01-03
Wing Anti-Icing Valves 14-01-04
Wing Anti-Ice Ducts 14-01-04
Wing Overheat 14-01-04
Wing Isolation Valve 14-01-04
Wing Anti-Ice System Schematic 14-01-05
Engine Anti-Ice 14-01-06
Description 14-01-06
Components and Operation 14-01-06
Nacelle Anti-Icing Valves 14-01-06
Engine Nacelle Ducting 14-01-06
T_2 Sensor 14-01-06
Engine Spinner 14-01-06
Air Data and Sensors Anti-Ice 14-01-07
Description 14-01-07
Components and Operation 14-01-07
Pitot Static Probes 14-01-07
Standby Pitot Probe 14-01-07
Standby Static Ports 14-01-07
Angle-of-Attack Vanes (AOA) 14-01-07
Total Air Temperature Probe (TAT) 14-01-07
Windshield Ice and Rain Protection 14-01-08
Description 14-01-08
Components and Operation 14-01-08
Windshield and Side Window Heating 14-01-08
Control Switches and Function 14-01-08
Controls and Indications 14-01-09
Description 14-01-09
Anti-Ice Control Panel 14-01-09
Anti-Ice Synoptic Page 14-01-10
EICAS Messages 14-01-11

INTRODUCTION

The wing leading edges and the engine intake cowls are heated using engine bleed air. The windshields, windows and the air data probes are heated using electrical power. Anti-icing of the aircraft tail surface is not required.

Two ice detectors provide indication to the flight crew of icing conditions.

The anti-ice protection system (AIPS) is controlled by the integrated air system controllers (IASC) with indications displayed on the EICAS. The ANTI ICE synoptic display provides an overview of status of the pneumatically operated anti-icing systems.

ICE DETECTION SYSTEM

DESCRIPTION

The Challenger 300 has two ice detectors, one on each side of the fuselage just above the nose landing gear doors. Each detector is supplied with 28 VDC and continuously monitors internal circuits and components for failure conditions.

COMPONENTS AND OPERATION

The ice detector uses a vibrating probe to detect the presence of icing conditions. Two detectors provide system redundancy; only one signal is needed to generate an EICAS message.

The ice detector probes vibrates at high frequency. As the ice detector enters an icing environment, ice collects on the sensing probe causing the frequency of the sensing probe to decrease. At the same time the ice detector de-ices the unit strut and probe through internal thermal heaters. Shedding the ice on the probe returns the vibration frequency of the probe to a non-icing value that allows the detection system to reassess if ice is accumulating. When the ice is removed, the heaters are de-energized. As ice builds again on the probe, the heater are reenergized and the process is repeated.

When ice is detected the following will occur:

- An amber ice icon is displayed on the PFD if the anti-ice systems are off
- An ICE DETECTED (C) CAS message is displayed if the anti-ice systems are off
- An ICE DETECTED (A) CAS is displayed if the anti-ice systems are on

A caution ICE DETECTOR FAIL is displayed on the EICAS when both ice detectors have failed. An advisory ICE DETECTOR FAULT is displayed on the EICAS when one of the ice detectors is failed.

Each ice detector is provided with a power on test capability as well as a continuous built in and pilot initiated test capability. To initiate a test of the system, select ICE DET on the SYSTEMS TEST panel and push the test switch. During the test sequence, an internal check of the electronics, probe heater, and CAS messages will be performed.

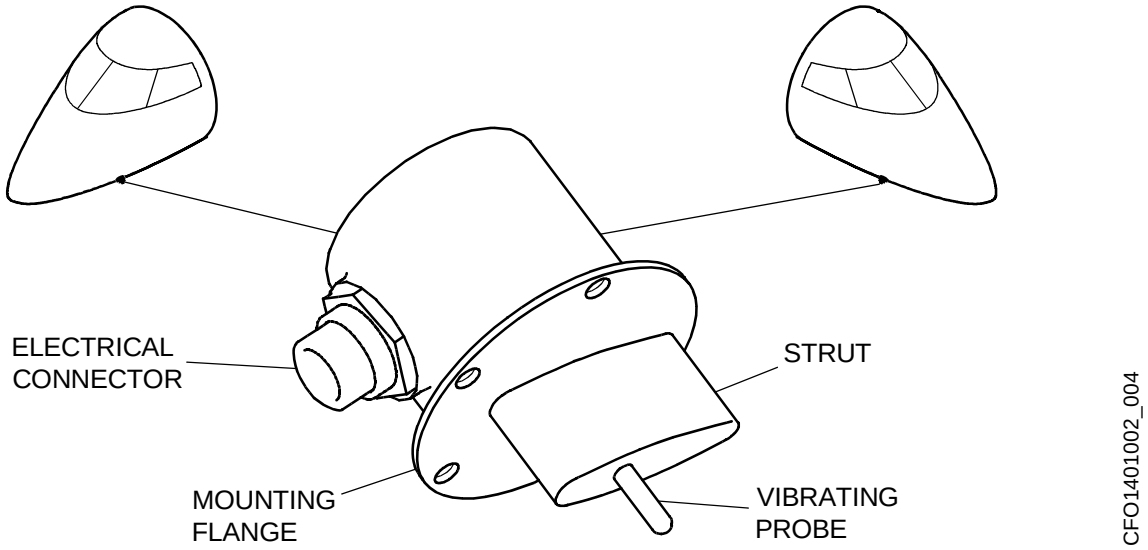

WING ANTI-ICE SYSTEM

DESCRIPTION

The wing anti-icing system heats the leading edge of the wing by heating the surfaces with high-pressure bleed-air from the engines. The left and right wings are normally heated with bleed-air from the respective engine, however the capability exists to provide bleed-air from either engine to both wings.

A WING push button switch, located on the ANTI-ICE control panel, is used to operate the wing anti-ice system. The WING SOURCE rotary switch on the ANTI-ICE control panel allows the pilot to select FROM L, NORM, or FROM R as the source of anti-icing bleed-air.

The anti-ice ducting is continuously monitored for bleed-air leakage.

COMPONENTS AND OPERATION

INTEGRATED AIR SYSTEM CONTROLLER (IASC)

Two dual-channel integrated air system controller (IASC) controls the operation of the wing anti-ice and leak detection systems.

Each IASC receives data from dual temperature sensors located in the inboard and outboard section of each leading edge. The IASC uses the sensor data to independently control the amount of bleed-air supplied to each wing to ensure that the leading edges are maintained in the correct temperature range.

BLEED LEAK DETECTION SYSTEM

To detect hot air leaks from the bleed system, the anti-ice ducts are monitored by the leak detection loops. The bleed leak detection system protects components and structure against over heating and fire hazards. Ducting is divided into four distinctive zones of dual loops. The four zones are divided as follows:

- Right pylon dual loops: includes the powerplant interface to the right intermediate pressure valve (IPV) and right high pressure valve (HPV)
- Left pylon dual loops: includes the powerplant interface to the left (IPV) and left (HPV)
- Right anti-ice ducting dual loops: includes all the ducting downstream of the right HPV to the end of the right wing bleed-air tubing
- Left anti-ice ducting dual loops: includes all the ducting downstream of the left HPV to the end of the left wing bleed-air tubing

When a leak is detected in the pylon zone (upstream of the HPV), a L (R) PYLON BLEED LEAK (W) message is displayed on the EICAS. The pilot must reduce the corresponding engine throttle and if the leak persists, shut down the corresponding engine.

When a leak is detected downstream of the HPV, a WING ANTI-ICE LEAK (W) CAS message is illuminated and the IASC will automatically close both wing anti-ice valves to isolate the failure and stop the leakage. If the leak stops after the automatic shutdown, the warning message will be replaced by a L (R) WING ANTI-ICE FAIL (C) CAS message. The pilot should then complete the shutdown of the wing anti-ice system

WING TEMPERATURE SENSORS

Dual temperature sensors provide feedback temperature data to the integrated air system controller (IASC). Two dual-temperature sensors are installed in the outboard section of each wing and two in the inboard section. Channel B of each IASC receives data from one sensor at each of the four wing positions.

Each outboard sensor monitors the leading edge of its associated wing for insufficient temperature. A L (R) WING ANTI-ICE FAIL (C) message will illuminate if there is insufficient heat.

The inboard sensor supplies the temperature data used to modulate the wing anti-icing valves. The sensor also monitors the wing for overheat and will display L (R) WING OVHT (W) CAS message if the condition exists.

WING ANTI-ICE SYSTEM (Cont)

WING ANTI-ICING VALVES

The left and right wing anti-icing valves are installed on the bleed-air manifold in the aft equipment bay.

When the WING switch is selected to ON, the wing anti-icing valves modulate as a function of the wing temperature.

The valves are spring-loaded to the closed position. The valve will close when:

- Bleed-air supply pressure is removed
- Loss of electrical power at the valve
- Anti-ice duct failure is detected by the IASC
- Anti-ice system is operated in either FROM L or FROM R mode

The high pressure valves limit the high stage engine bleed pressure to 36 ±3 psi. If a valve fails and pressure exceeds 46 psi, a caution (L) R WING A/I PRESS HI CAS message is displayed.

WING ANTI-ICE DUCTS

The aft equipment bay and center fuselage anti-icing ducts provide bleed-air to the wing anti-icing ducts. The hot air enters the wing via the piccolo tube in the leading edges.

In the wing leading edges, dual sensing loops and dual temperature sensors are used to detect the failure of a wing anti-ice duct (piccolo tube) or duct connector. The detectors can discriminate between overheat condition caused by a leaking duct and the normal temperatures associated with wing anti-icing. The wing anti-icing piccolo ducts uniformly spray hot bleed-air onto the inner surfaces of the leading edges.

The bleed-air used to anti-ice the leading edges is dissipated to the atmosphere through vent holes located on the bottom side of the wing surface.

WING OVERHEAT

When the anti-icing system overheats, a L (R) WING OVERHEAT (W) CAS illuminates, and the pilot shuts off the wing anti-ice system, selects FROM L or FROM R and selects the system ON. Bleed flow is modulated by the sensor on the same side as the bleed source when FROM L or FROM R is selected.

On the ANTI-ICE synoptic page, the overheated leading edge will be identified in red.

WING ISOLATION VALVE

A crossbleed duct bridges the two anti-ice lines and contains the wing isolation valve.When opened, bleed air can be supplied to the wings by one engine. This function is automatic in case of engine failure. In normal operation, the isolation valve is closed.

The wing isolation valve is pneumatically actuated and electrically controlled. The valve is controlled from the ANTI-ICE control panel. When FROM L is selected at the WING SOURCE rotary switch, the right wing anti-ice and high pressure valves are closed and the crossbleed valve opens to permit bleed-air from the left engine to anti-ice both wings.

When the FROM R is selected, the left wing anti-ice and high pressure valves are closed and the crossbleed valve opens allowing bleed-air from the right engine to anti-ice both wings.

WING ANTI-ICE SYSTEM (Cont)

WING ANTI-ICE SYSTEM SCHEMATIC

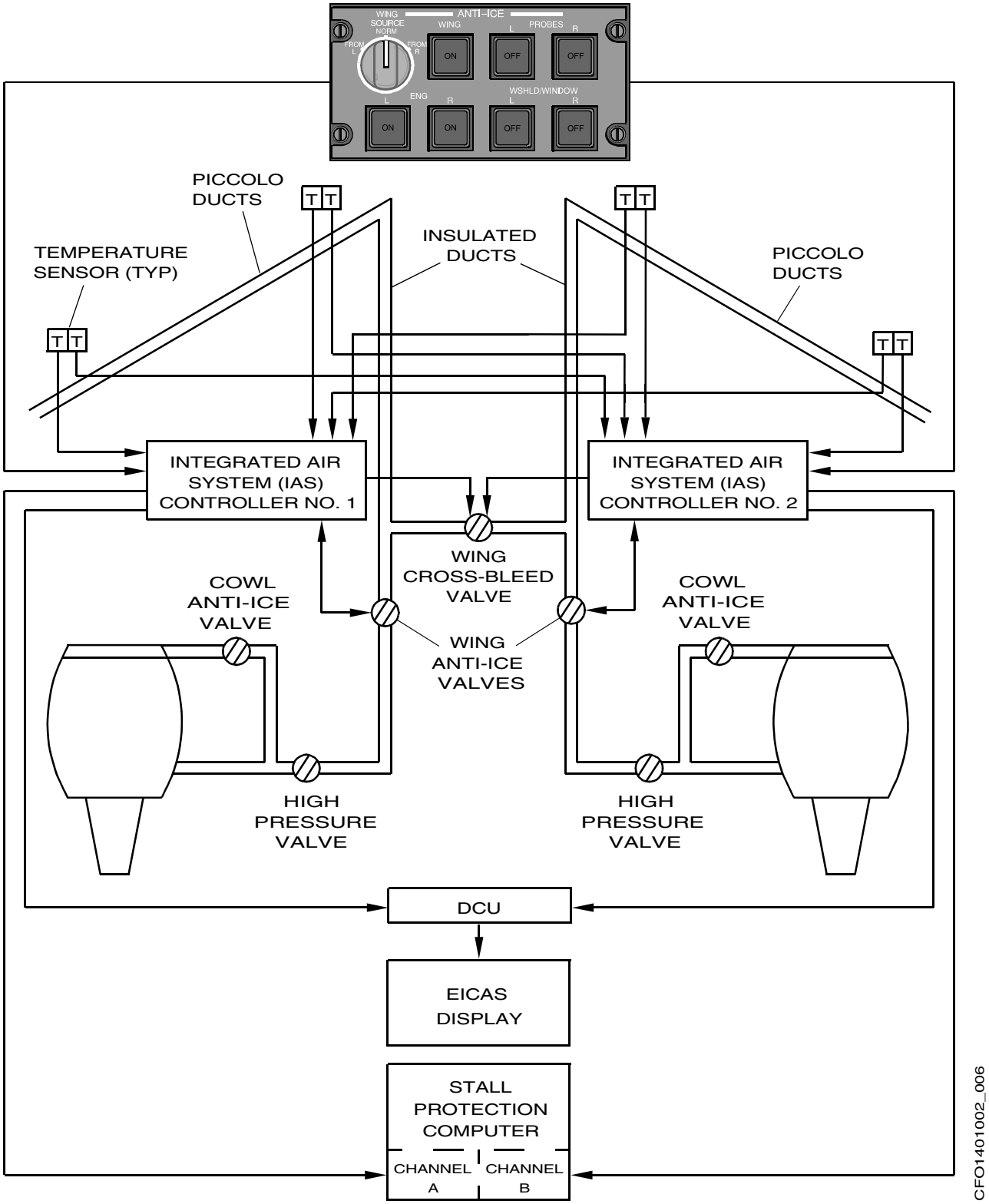

ENGINE ANTI-ICE

DESCRIPTION

Each of the engine nacelle inlets are anti-iced with engine bleed-air. The left and right engine anti-icing systems are controlled by L (R) ENG switches on the ANTI-ICE control panel located on the center pedestal.

COMPONENTS AND OPERATION

NACELLE ANTI-ICING VALVES

Nacelle anti-icing valves are located on top of each engine downstream of the high pressure duct. The valves are electrically operated and pneumatically controlled and incorporates a fail safe open feature.

ENGINE NACELLE DUCTING

Hot bleed-air is directed to and then sprayed by a piccolo tube onto the inner surface of the nacelle leading edge. The air is then discharged overboard through an exhaust duct located at the bottom of the nacelle inlet.

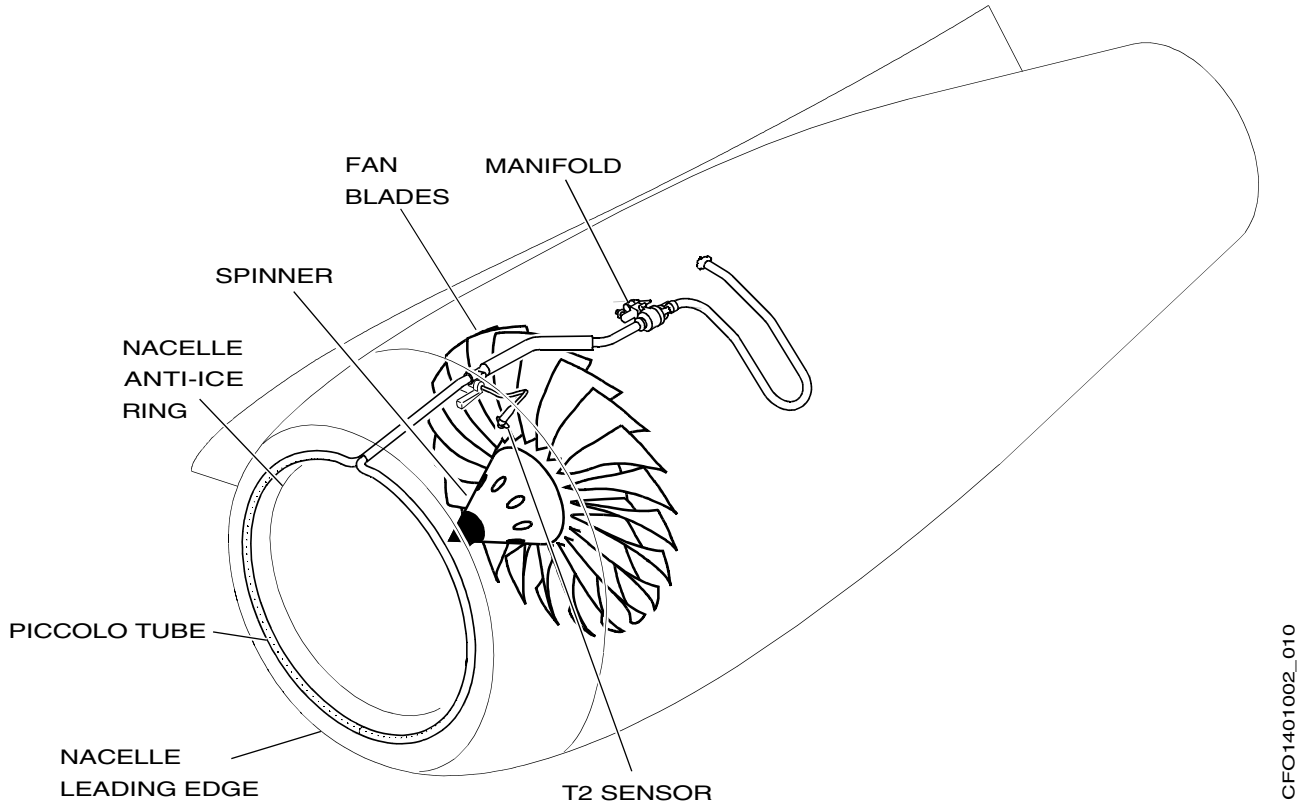

T2 SENSOR

A T2 sensor is installed in the inlet housing of each engine and senses the engine inlet total-air temperature. The T2 sensor supplies the inlet total-air temperature to each of the electronic control units (ECU).

The in-control ECU uses the engine inlet total-air temperature for power control. The sensor contains two resistance temperature devices and a heat device for anti-ice. The anti-ice function is controlled from the L or R ENG switches on the ANTI-ICE panel.

ENGINE SPINNER

The engine spinner is a two-piece, aluminum forging with a conical shape to provide a surface that sheds ice in icing conditions and operates without the need for anti-icing heat.

AIR DATA AND SENSORS ANTI-ICE

DESCRIPTION

The air data probes and sensors are located on either side of the aircraft nose and are electrically heated to prevent ice formation. Separate air data sensor heat controllers provide control and monitoring of the probe heaters.

L (R) PROBES switches are provided on the ANTI-ICE control panel. When selected On, the following probes and sensors are heated:

- Left and right standby static port
- Left and right AOA sensor
- Left and right pitot-static probe
- TAT probe
- Standby pitot probe

Failure of a probe heater will signal the DCU to display the appropriate EICAS message.

COMPONENTS AND OPERATION

PITOT STATIC PROBES

There are two pitot static masts, one on either side of the nose. The pitot static mast consists of a head and mounting base. The mast has two heaters, one in the head and the other in the base.

STANDBY PITOT PROBE

There is one standby pitot probe on the left side of the nose.

STANDBY STATIC PORTS

One flush standby static port located in each side of the aircraft.

ANGLE-OF-ATTACK VANES (AOA)

Angle-of-attack vanes are located on each side of the aircraft under the side windows and behind the pitot tubes. The AOA vanes are heated when activated by the PROBES switch.

TOTAL AIR TEMPERATURE PROBE (TAT)

One total air temperature sensor is located in the right side of the aircraft. The TAT heater operates in flight only.

WINDSHIELD ICE AND RAIN PROTECTION

DESCRIPTION

The windshield and side window heating system includes two windshields and two side windows that contain embedded heater elements and sensor elements. The windshield and windows are treated with a rain resistant coating

COMPONENTS AND OPERATION

WINDSHIELD AND SIDE WINDOW HEATING

The windshield heater elements are segmented into three sections, and allow for concentration of heating in a smaller area of the windshield in order to allow visibility in severe icing conditions. The side window heater elements have no segmentation. Flight in super-cooled large droplet icing (SLD) conditions may, but not necessarily be indicated by ice accretion on side windows. Temperature controllers, one for each windshield and window, monitor the electrical resistance of the temperature sensors that are embedded in the glass. The temperature controllers cycle power on and off to maintain a predetermined glass surface temperature.

CONTROL SWITCHES AND FUNCTION

Switches located on the ANTI-ICE panel control windshield and window heat. The L WSHLD/WINDOW switch controls the left windshield and left window. The R WSHLD/WINDOW switch controls the right windshield and right window.

Overheat protection circuits for each windshield or window remove power from the affected surface during an overheat condition. Selecting the L (R) WSHLD/WINDOW off de-energizes the applicable windshield and window and resets the temperature controller.

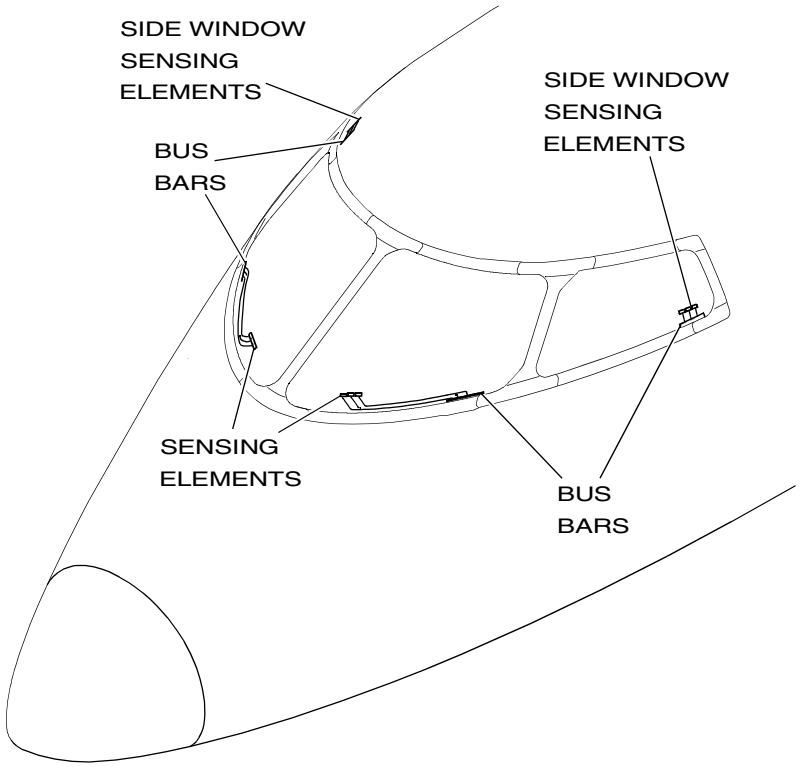

CFO14001002_007

CONTROLS AND INDICATIONS

DESCRIPTION

The ANTI-ICE control panel located on the center pedestal is used to operate the anti-ice systems.

Anti-ice system operation and fault presentation is provided on the ANTI-ICE synoptic display. The ANTI-ICE synoptic display monitors the pneumatically-operated anti-icing and ice detection systems.

ANTI-ICE CONTROL PANEL

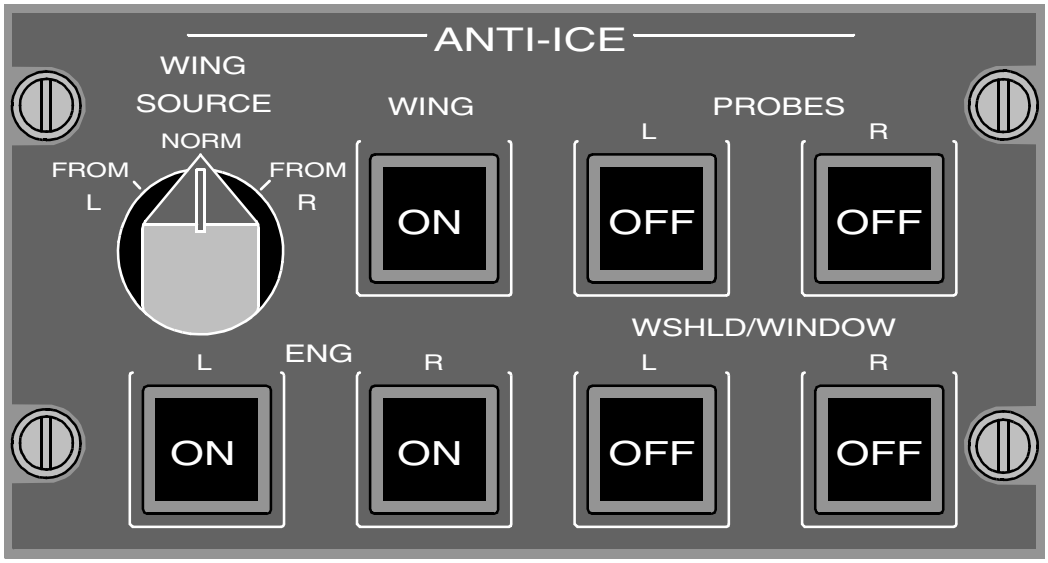

CONTROLS AND INDICATIONS (Cont)

ANTI-ICE SYNOPTIC PAGE

The ANTI-ICE synoptic page is used to monitor the pneumatically operated anti-icing and ice detection systems.

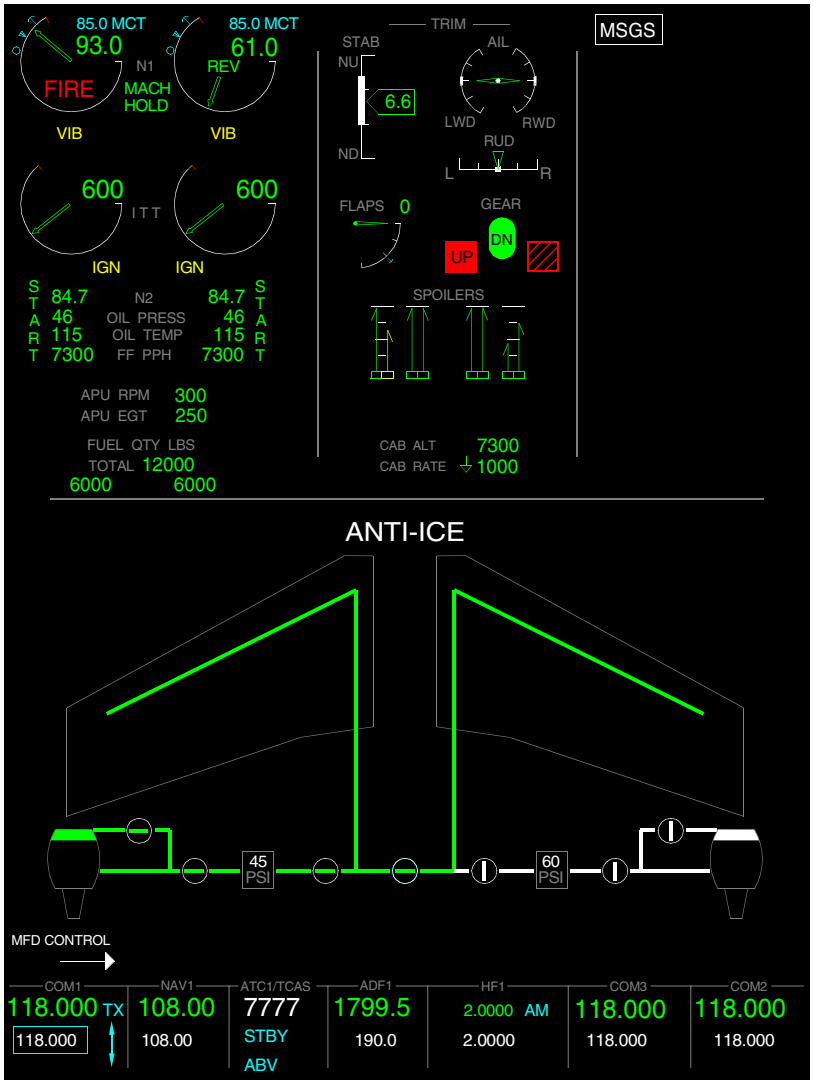

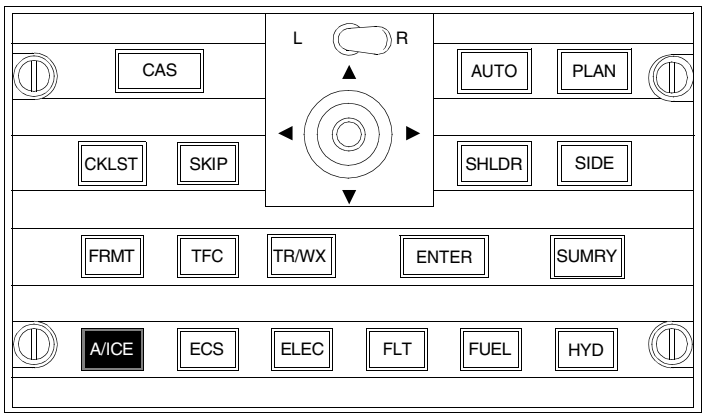

CFO0305002_009

EICAS MESSAGES

The ice and rain protection system messages are shown on the EICAS. In the table below, the ice and rain protection system messages are listed. A brief explanation of each message is provided.

MESSAGE	INHIBITS	MEANING	AURAL WARNING
WING ANTI-ICE LEAK		A leak has been detected along the wing anti-ice ducting	
L (R) WING OVERHEAT		A wing anti-ice overheat condition exists in the indicated wing	
L (R) ENG ANTI-ICE FAIL	TO	Bleed air pressure to the respective nacelle is too low for effective anti-icing, or the electrically heated T_2 heater has failed when the respective L or R ENG switch is ON	
ICE DETECTED	TO/LAND	Ice has been detected, and both the engine and wing anti-ice systems are not selected on	
ICE DETECTOR FAIL	TO/LAND	Both ice detectors have failed	
L (R) PITOT HEAT FAIL	TO/LAND	The respective pitot mast or base heater has failed	
L (R) PROBE HEAT OFF	TO/LAND	Probe heat is off	
STBY PITOT HEAT FAIL	TO/LAND	The standby pitot heater has failed	
STBY STAT HEAT FAIL	TO/LAND	The respective standby static heater has failed	
L (R) WING A/I LOW TEMP	TO/LAND	Indicates that the respective wing has an anti-ice low temperature condition	
L (R) WING ANTI-ICE FAIL	TO/LAND	The respective anti-ice system has failed	
WINDOW HEAT FAIL	TO/LAND	The respective window heat has failed and the temperature is too low or too high. A failure may also be indicated by the formation of condensation (fog) on the window	
WING ANTI-ICE FAULT	TO/LAND	Both outboard wing leading-edge sensors have failed	
WING A/ICE LOOP FAIL	TO	Both detection loops failed. This is only checked during power up self-test	
L (R) WING A/I PRESS HI	TO/LAND	High pressure has been sensed in the wing anti-ice system	

EICAS MESSAGES (Cont)

MESSAGE	INHIBITS	MEANING	AURAL WARNING
L (R) WSHLD HEAT FAIL	TO/LAND	The respective window heat has failed, and the temperature is too low or too high. a failure may also be indicated by the formation of ice or condensation (fog) on the windshield	
L (R) AOA CASE HEAT FAIL	TO/LAND	The respective angle-of-attack case heater has failed	
L (R) ENG A/ICE FAIL ON	TO/LAND	The respective engine nacelle anti-ice has failed ON. If the T2 probe heater has failed on, an amber "T2" icon will be displayed on the anti-ice synoptic. If engine anti-ice bleed air has failed on, a green flow line will be displayed downstream of the failed anti-ice valve on the synoptic	
ICE DETECTED	TO/LAND	Ice has been detected and the engine and wing anti-ice systems are selected on	
ICE DETECTOR FAULT	TO/LAND	One ice detector has failed; the other should continue to operate normally	
L (R) PROBE HT CTRL FAIL	TO/LAND	The respective probe heat controller has failed. The probe heat will fail ON	
TAT HEAT FAIL	TO/LAND	The total air temperature probe heater has failed	
WING SOURCE XBLEED	TO/LAND	Wing crossbleed valve is open	
WING ANTI-ICE FAULT	TO/LAND	One channel has failed on the outboard wing leading-edge sensor. The wing anti-ice should work normally	
L (R) ENGINE ANTI-ICE ON		The respective (or both) ENG ANTI-ICE switch(es) is/are ON	
ENGINE ANTI-ICE ON		The respective (or both) ENG ANTI-ICE switch(es) is/are ON	
PROBE HEAT TEST OK		The pilot initiated probe heat test has passed.	
WING ANTI-ICE ON		The WING ANTI-ICE switch is selected ON	
WING/ENG ANTI-ICE ON		The wing and both engine anti-ice systems are ON	
WING SOURCE XBLEED		Either FROM L or FROM R has been selected on the ANTI-ICE WING SOURCE switch	

EICAS MESSAGES (Cont)

MESSAGE	INHIBITS	MEANING	AURAL WARNING
L (R) AOA CASE HEAT FAIL	TO/LAND	The respective angle-of-attack case heater has failed	
L (R) ENG A/ICE FAIL ON	TO/LAND	The respective engine nacelle anti-ice has failed ON. If the T2 probe heater has failed on, an amber "T2" icon will be displayed on the anti-ice synoptic. If engine anti-ice bleed air has failed on, a green flow line will be displayed downstream of the failed anti-ice valve on the synoptic	
ICE DETECTED	TO/LAND	Ice has been detected and the engine and wing anti-ice systems are selected on	
ICE DETECTOR FAULT	TO/LAND	One ice detector has failed; the other should continue to operate normally	
L (R) PROBE HT CTRL FAIL	TO/LAND	The respective probe heat controller has failed. The probe heat will fail ON	
TAT HEAT FAIL	TO/LAND	The total air temperature probe heater has failed	
WING SOURCE XBLEED		Wing xbleed valve open	
WING ANTI-ICE FAULT	TO/LAND	One channel has failed on the outboard wing leading-edge sensor. The wing anti-ice should work normally	
L (R) ENGINE ANTI-ICE ON		The respective (or both) ENG ANTI-ICE switch(es) is/are ON	
ENGINE ANTI-ICE ON		The respective (or both) ENG ANTI-ICE switch(es) is/are ON	
PROBE HEAT TEST OK		The pilot initiated probe heat test has passed.	
WING ANTI-ICE ON		The WING ANTI-ICE switch is selected ON	
WING/ENG ANTI-ICE ON		The wing and both engine anti-ice systems are ON	
WING SOURCE XBLEED		Either FROM L or FROM R has been selected on the ANTI-ICE WING SOURCE switch	

Table of Contents

Introduction 15-01-01
Proximity Sensing System 15-01-02
Description 15-01-02
Components and Operation 15-01-02
Landing Gear Position and Warning System 15-01-02
Landing Gear 15-01-03
Main Landing Gear 15-01-03
Description 15-01-03
Components and Operation 15-01-03
Main Gear Door 15-01-03
Main Wheel Bins 15-01-03
Main Landing Gear Uplocks and Downlocks 15-01-03
Main Gear Downlock Safety Pins 15-01-05
Nose Landing Gear 15-01-06
Nose Doors 15-01-06
Nose Gear Downlock Safety Pin 15-01-08
Normal Extension and Retraction 15-01-09
Gear Extension 15-01-09
Gear Retraction 15-01-09
Manual Release System (MRS) 15-01-10
Tires and Brakes 15-01-11
Description 15-01-11
Components and Operation 15-01-11
Park/Emer Brake 15-01-12
Brake Control System 15-01-13
Main and Park/Emer Brake Accumulators 15-01-14
Anti-Skid 15-01-15
Description 15-01-15
Nosewheel Steering 15-01-15
Description 15-01-15
Components and Operation 15-01-15
Steering Control Unit 15-01-15
Steering Control System 15-01-16
Landing Gear Indications 15-01-17
Controls and Indications 15-01-18
Description 15-01-18
Landing Gear (Up) 15-01-19
Landing Gear (Down) 15-01-20
NWS Switch 15-01-21
Nosewheel Steering Tiller 15-01-21
Landing Gear Indication 15-01-21
EICAS Messages 15-01-22

INTRODUCTION

The landing gear system for the Challenger 300 is arranged in a retractable tricycle configuration consisting of two main landing gear assemblies and a steerable nose landing gear assembly. Each landing gear assembly has twin wheels and tires.

Normal extension and retraction of the landing gear is powered by the aircraft's left hydraulic system. The Manual Release System (MRS) is used to deploy the landing gear, if normal extension of the landing gear is inoperative. Landing gear position monitoring is a provided by the Proximity Sensor System (PSS) and displayed through a combination of EICAS messages and aural alerts.

Each of the main landing gear is equipped with self-adjusting multidisc carbon brakes. The left hydraulic system powers the brakes of the inboard wheels, the right hydraulic system powers the brakes of the outboard wheels. Anti-skid control and locked-wheel protection is provided. The PARK/EMER BRAKE operates both the inboard and outboard brakes, however, anti-skid is not available when utilizing emergency brakes.

Associated subsystems include:

- Main Landing Gear and Doors
- Nose Landing Gear and Doors
- Gear Extension and Retraction System
- Manual Release System
- Steering Control System
- Proximity Sensing System
- EICAS Messages and Audio Alerts
- Brake System

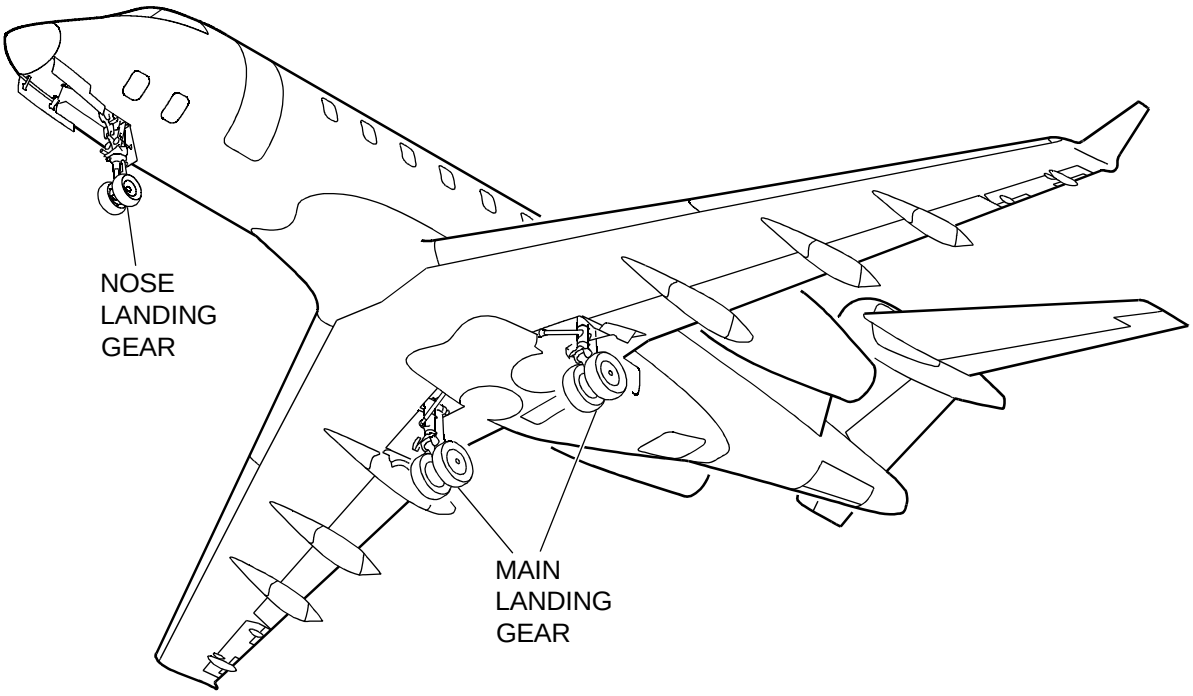

CFO1501002_026

PROXIMITY SENSING SYSTEM

DESCRIPTION

The Proximity Sensing System (PSS) consists of the Proximity Sensing Electronic Unit (PSEU) and proximity sensors. The PSS sequences the landing gear operation. It also monitors the aircraft doors, thrust levers, and spoiler position.

COMPONENTS AND OPERATION

The PSEU receives data from the LANDING GEAR selector handle and various proximity sensors.The PSEU processes the information to sequence the landing gear and program other aircraft configurations for flight and ground operations. The PSEU also monitors the position of the landing gear, uplocks, and downlocks. It also electrically controls the hydraulic selector valves during normal landing gear extension and retraction. After takeoff, the PSEU disables the normal brakes and nose wheel steering systems. At touchdown, it re-arms the systems for use during the landing roll and taxi.

The sensors measure the physical relationship between two aircraft components. If the components are close, the sensors provide a “near” signal. If the components are separated, a “far” signal is generated. The PSEU processes this information to command landing gear and other aircraft systems operation.

NOTE: Dual proximity sensors, installed on each of the landing gear, supply the PSEU with weight-on-wheels (WOW) information. The dual main landing gear WOW sensors and dual nose landing gear WOW sensors provide redundancy if a failure of any one WOW proximity sensor fails.

LANDING GEAR POSITION AND WARNING SYSTEM

The status of the landing gear is determined by the PSEU using inputs from various proximity sensors. The resulting output is sent to the EICAS which monitors the condition and position display of each item.

A GEAR DISAGREE caution message is posted if any of the following conditions occur:

- Any one gear remains in-transit for more than 28 seconds
- The position of at least one gear does not agree with landing gear control lever except during normal transit
- The landing gear control handle is left in the up position during manual extension

The gear down, in-transit, and disagree conditions are displayed as long as the condition exists. The gear and flaps display is removed from the primary page 30 seconds after the flaps are retracted and the gear is up.

The AURAL — GEAR is non-mutable if the following conditions are met:

- Any of the gear not down and locked AND
- Radio Altimeter valid and Radio Altimeter < 500 feet AND
- Left and Right Thrust Levers < 26° Thrust Lever Angle OR
- Flaps $\geq$ 27°.

If the radio altimeter is inoperative, the “GEAR” voice warning is a mutable condition. The logic resulting in a “GEAR” voice warning when the radio altimeter is inoperative is:

- Any gear not down and locked AND
- Radio Altimeter invalid AND
- Left and Right Thrust Levers < 26° Thrust Lever Angle AND
- Altitude < 15 000 feet OR
- Airspeed < 170 KIAS AND Flaps < 3°, OR
- Airspeed < 160 KIAS with Flaps < 13°, OR
- Airspeed < 155 KIAS with Flaps > 13°.

Both the mutable and the non-mutable voice warnings are accompanied by the GEAR (W) CAS message and the affected gear icon(s) turning red. These visual cues will remain and can not be suppressed as long as the conditions triggering the original warning persist, regardless of whether valid muting command has been applied. When permitted, muting of the voice warning is accomplished by pressing the Master Warning/Master Caution switch on the glareshield. The warning automatically resets in the event that the condition no longer exists. The warning will become active again on a subsequent landing attempt if the logic conditions are met.
The logic driving the mutable and non-mutable warnings are designed to ensure adequate time to either lock the gear down or perform a go-around.

PROXIMITY SENSING SYSTEM (Cont)

LANDING GEAR POSITION AND WARNING SYSTEM (Cont)

The PSEU monitors all gear functions. Any deviation from the selected gear configuration or failure of the uplocks or downlocks is annunciated on the EICAS in the form of visual and aural messages

LANDING GEAR

MAIN LANDING GEAR

DESCRIPTION

The Main Landing Gear (MLG) consists of two shock strut type, trailing link assemblies. The MLG retracts toward the centerline of the fuselage. The MLG is hydraulically actuated by the left hydraulic system and electrically controlled by the PSS.

The MLG are hydraulically retracted into the MLG bay, located in the wing underside, by a side brace actuator. This actuator is a hydraulic piston-cylinder actuator with an internal segmented down locking mechanism. Each gear is held in the up lock position with a MLG Uplock Assembly.

COMPONENTS AND OPERATION

Each main landing gear assembly consists of:

- Main Landing Door Mechanism
- Main Fitting
- Side Brace Actuator Assembly
- Nitrogen gas/oil filled Shock Strut
- Trailing Arm Assembly
- Axle with Carbon Brake Assemblies
- Dual Wheels
- Uplock Mechanism
- Extension and Retraction actuator
- Auxiliary Extend Assembly
- Electrical Harnesses and Hydraulic Dressings

MAIN GEAR DOOR

The main gear door is mechanically linked to the main landing gear assembly and moves with the gear during extension and retraction. Each main gear door is attached to the wing structure with two hinges. The main door structure is made from a clad-aluminum alloy sheet. A nylon door brush is installed on the bottom edge of the door to create a seal between the tire and fuselage.

MAIN WHEEL BINS

Each main gear assembly retracts inward into wheel bins that are recessed into the main landing gear bay. The wheel bins isolate the wheels from the main landing gear bays and prevent tire-thrown debris from damaging the equipment located within the main landing gear bay. Each wheel bin contains a single loop overheat detection wire to provide a CAS warning should a wheel overheat. The bins can be removed to allow maintenance personnel access to the main landing gear bay.

MAIN LANDING GEAR UPLOCKS AND DOWNLOCKS

The main landing gear is held in the up-and-locked position by mechanical uplocks. With the gear extended, locking mechanisms in the side-brace keeps lock the gear in the down position. On the ground, locking pins can be inserted into the side strut actuator.

LANDING GEAR (Cont)

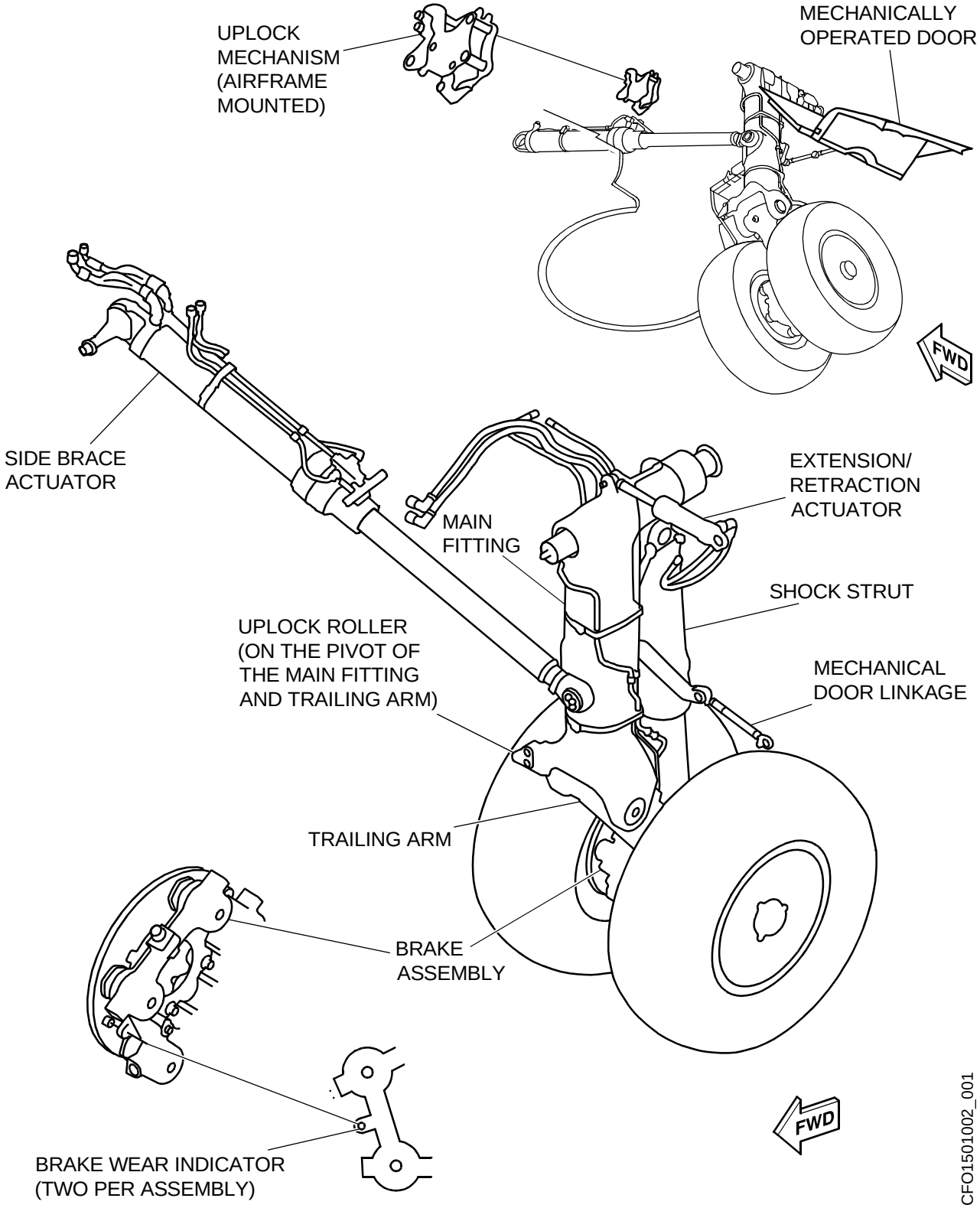

LANDING GEAR (Cont)

MAIN GEAR DOWNLOCK SAFETY PINS

A downlock safety pin at the end of the side brace assembly, secures each of the main landing gear in position while on the ground.

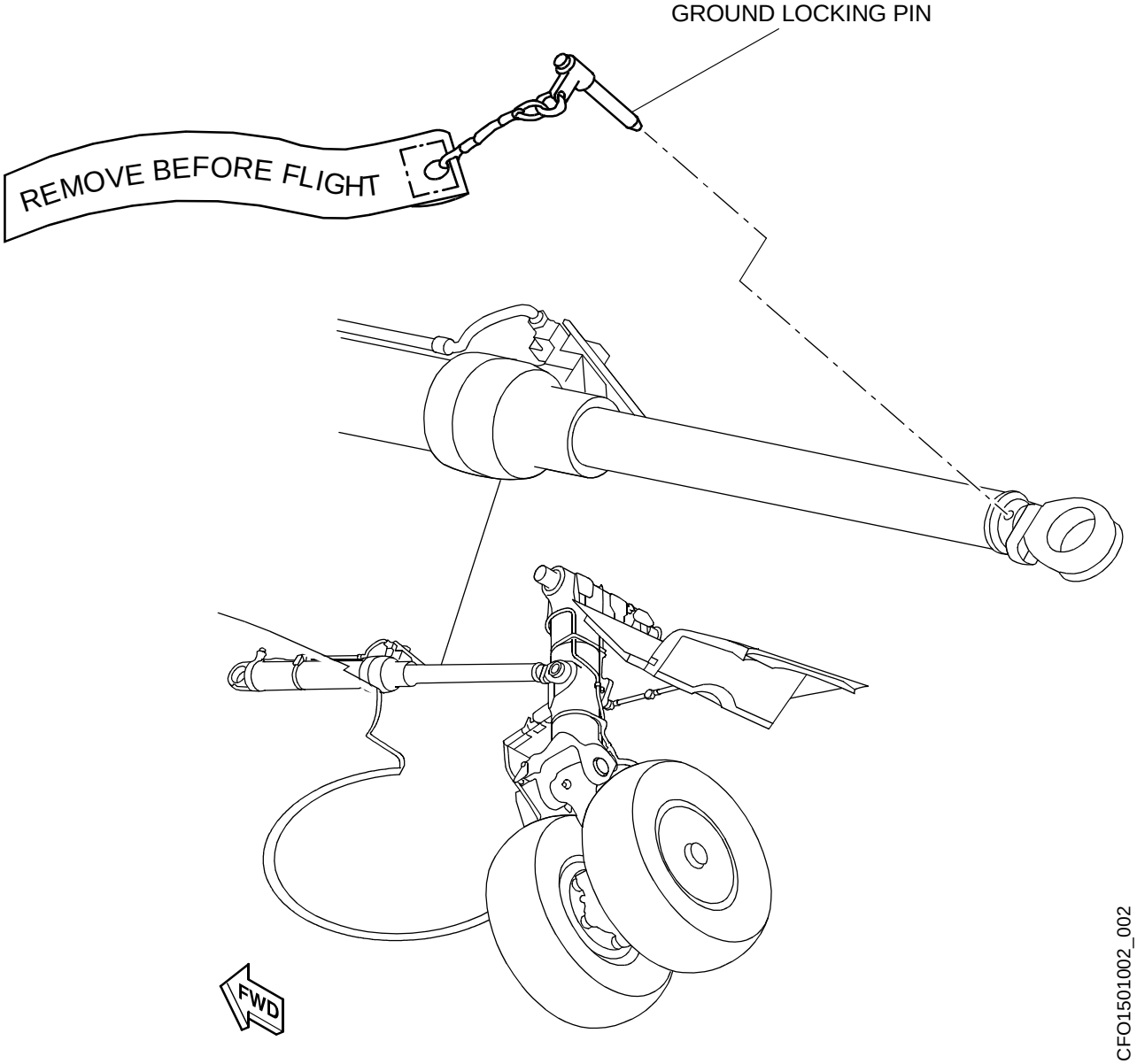

LANDING GEAR (Cont)

NOSE LANDING GEAR

The Nose Landing Gear (NLG) consists of a twin wheel forward retracting, cantilever shock strut, and folding drag strut that incorporates a mechanical downlock.

The major sub-assemblies of the NLG are shock strut, retraction actuator, wheel and tire, drag brace and harness assemblies, hydraulic hoses and taxi/landing lights.

The nose landing gear is actuated by the left hydraulic system and electrically controlled by the proximity sensor system (PSS) which includes the proximity sensor electronic unit (PSEU) and control handle. Normal operation of the landing gear extension and retraction system is initiated by selecting the desired landing gear position, UP or DOWN, using the landing gear control handle mounted on the main instrument panel.

In flight, the nose gear is electronically centered by the steering control unit (SCU), and mechanically centered by centering cams as the oleo extends with the assistance of the nitrogen filled strut and under the weight of the springs and wheel assemblies.

A spring-operated external lock mechanism on the drag brace mechanically locks the nose gear in the extended position. A NLG ground locking pin can be inserted into the upper drag brace sub-assembly to prevent inadvertent unlocking while the aircraft is on the ground.

The NLG also contains the steering manifold assembly and steering actuator which provides steering and castering functions for the NLG during ground maneuvers.

With the torque link attached, the gear can only be rotated 120° in either direction. Attempting to rotate beyond this causes a switch to trip, resulting in a NWS LIMIT EXCEEDED (C) CAS message and potential structural damage. In addition to the cockpit indication, the feedback mechanism also incorporates indicator pins at approximately ±123° of steering angle. If the steering angle exceeds this value during towing while the torque links are connected, these pins are designed to yield to indicate the need to inspect the feedback links and surrounding area as detailed in the AMM for possible damage.

For special hangar operations, the torque links may be disconnected to allow towing at any angle provided the NLG shock strut extension exceeds 3.50 inches of chrome showing.

NOSE DOORS

The nose gear doors give aerodynamic smoothness to the fuselage when the nose landing gear is retracted in the wheel well.

The aft door is mechanically attached to the landing gear assembly and provides partial enclosure of the gear. Two control rods attach the aft door to the nose gear shock strut. A hinge attaches the aft door to the aircraft structure.

The forward doors attach with hinges to the left and right sides of the wheel well and are mechanically linked and operated by the nose gear system. There are two forward-door mechanisms. Each of these mechanisms has a link which operates a bell crank and a control rod. When the nose gear is retracted, the mechanisms pull the two forward doors to the fully closed position.

When the nose gear is down, the forward doors and aft door will remain open.

LANDING GEAR (Cont)

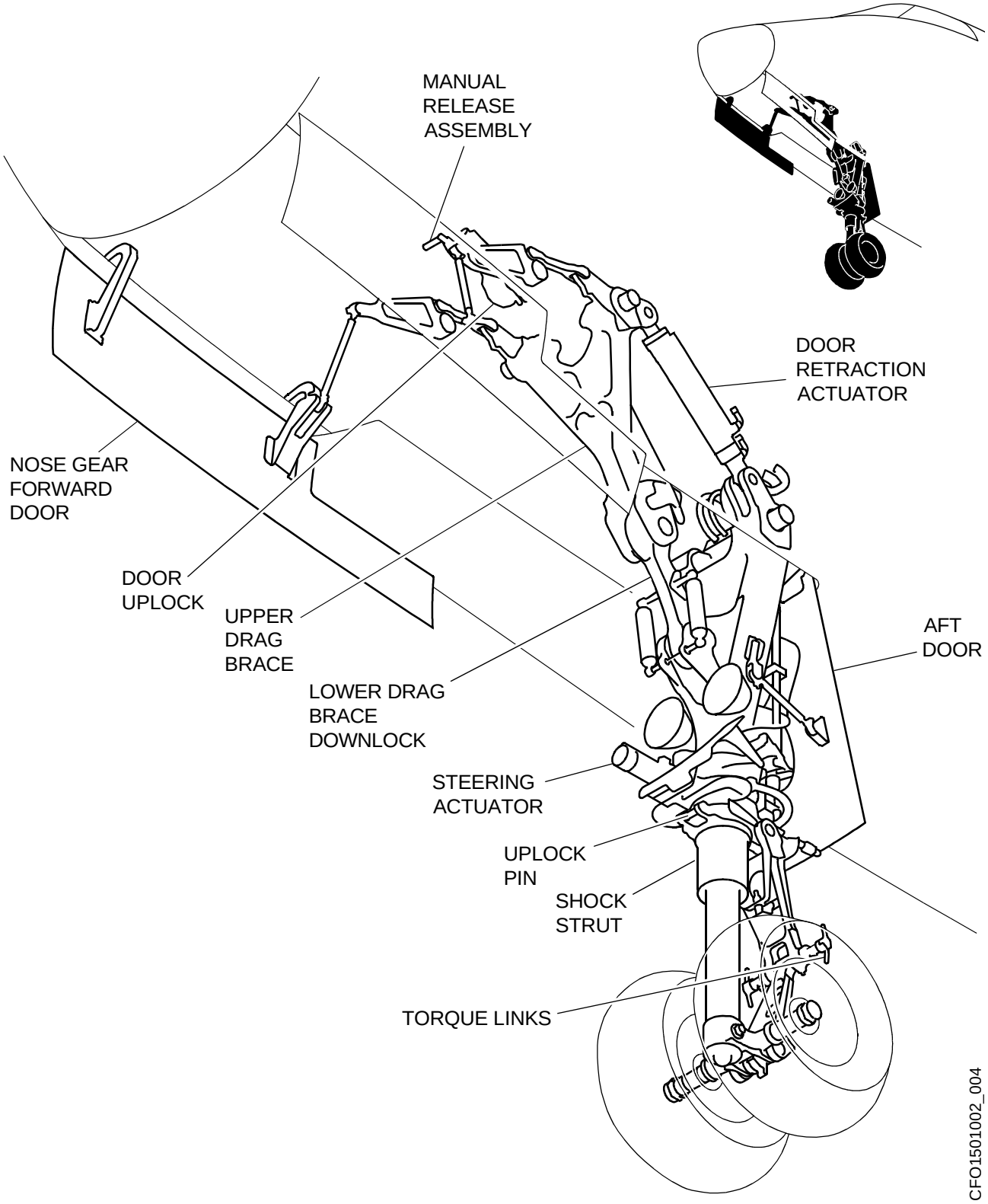

LANDING GEAR (Cont)

NOSE GEAR DOWNLOCK SAFETY PIN

A downlock safety pin, within the drag brace assembly, secures the nose landing gear in position while on ground.

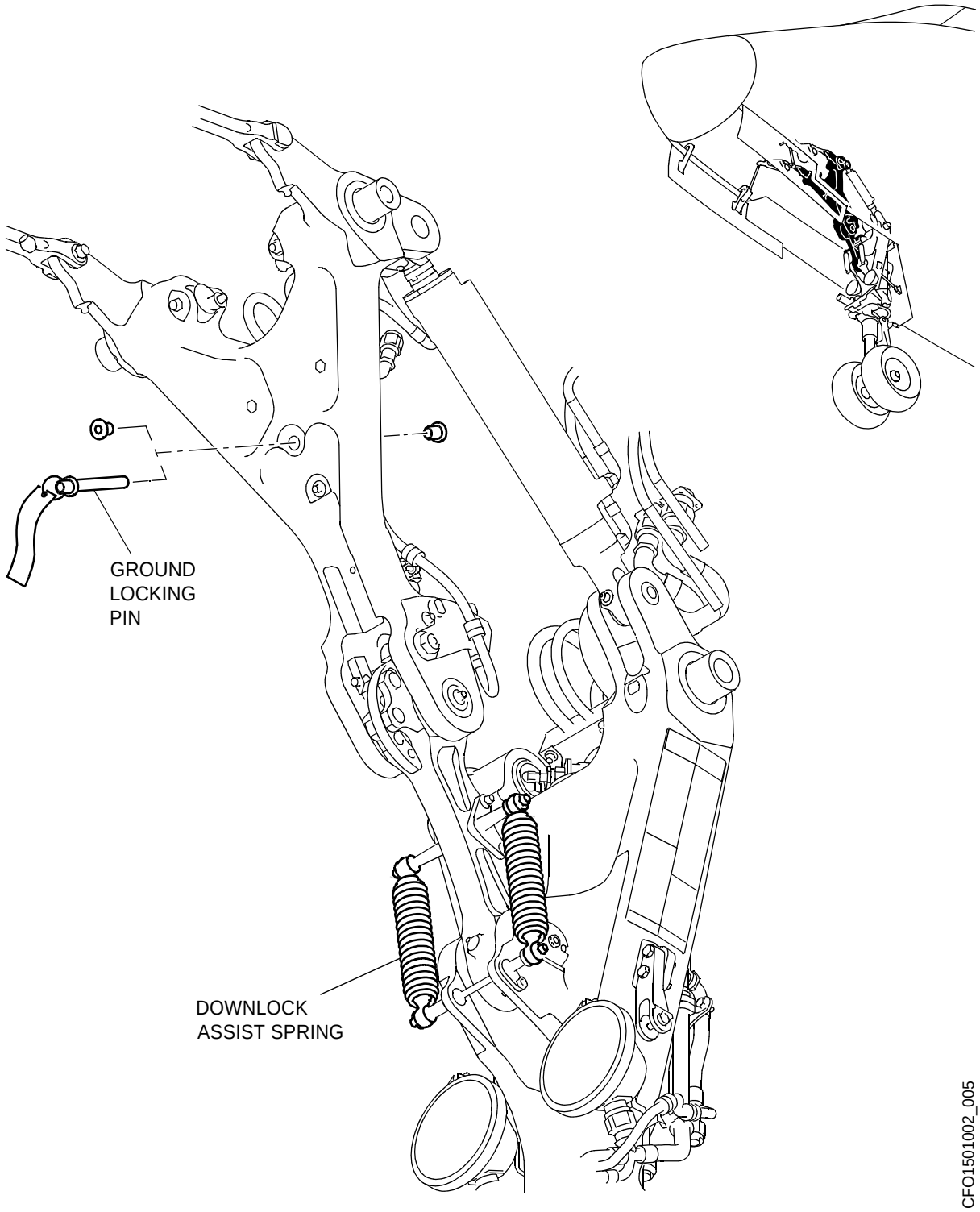

LANDING GEAR (CONT)

NORMAL EXTENSION AND RETRACTION

Normal retraction and extension of the landing gear is initiated by selecting the landing gear switch UP or DN. The retraction or extension signal is sent to the PSS which monitors various landing gear proximity sensors and weight on wheels (WOW) inputs. If the correct parameters are met, the proximity system electronic unit (PSEU) energizes the selector valve to retract or extend the landing gear using the left hydraulic system.

GEAR EXTENSION

During gear extension, the NLG extends rearward and the MLG extends outward.

When the landing gear switch is manually selected to the DN position, the PSEU commands and monitors the following events:

- Landing gear selector valve is energized to direct hydraulic fluid to release the MLG uplocks and the nose over-center mechanism, extending the landing gear
- NLG and MLG downlocks are hydraulically and mechanically engaged to secure the landing gear in the extended position.

GEAR RETRACTION

During retraction, the nose gear retracts forward and the main gear retracts inward.

During landing gear retraction (no WOW signal), the PSEU commands and monitors the following events:

- Landing gear selector valve is energized to direct hydraulic fluid to release the respective downlocks and retract the NLG and MLG. The brake control unit (BCU) commands a brake pressure of 350 psi for four seconds during gear retraction to ensure the main wheels have stopped spinning as they enter the MLG bay.
- When the gear is fully up, uplocks for the MLG are engaged mechanically. The uplock mechanism consists of a housing bolted to the airframe structure containing a latch lever and hook that engages a roller attached to the steering cuff of the landing gear. The hook holds the NLG in the retracted position.
- A restrictor is located in the aft of the NLG wheel well. This restrictor is installed in the up hydraulic line. When the landing gear selector handle is selected UP, this restrictor will decrease hydraulic fluid flow which decreases the retraction speed and allows the NLG to retract smoothly and with less noise.

LANDING GEAR (Cont)

MANUAL RELEASE SYSTEM (MRS)

Should a failure occur with the landing gear control circuitry or the left hydraulic system, the manual release system is available to the crew as an alternate means to extend the landing gear. Upon release from the uplock, the nose landing gear will fully extend with the aid of gravity and spring forces, while the auxiliary extend actuators assist in the extension of the main landing gear.

The handle is located near the rear of the center pedestal on the copilot's side. When the manual release handle is operated by the aircrew, cable movement is transmitted through the main quadrant, by a closed loop cable assembly to the main landing gear quadrant, and MLG valve assemblies. The displacement of the spools on the two dump valves blocks the supply of hydraulic pressure and connects the downstream landing gear components via the return lines to the left hydraulic system reservoir and bypasses the landing gear actuators. The MLG quadrant operates the MLG uplock manual release levers via tension cables. Displacement of the uplocks releases the MLGs for gravity extension.

The manual selector valve, when activated by the MLG quadrant, admits pressure from the right hydraulic system (supported by an accumulator) to both auxiliary extend actuators to assist the main landing gear into downlock. The mechanical locks in the side brace actuator then engage and lock the gear down. During normal operation, the auxiliary extend actuators are bypassed to the right hydraulic system return and the piston moves freely as the landing gear extend and retract.

Manual release handle movement is transmitted from the main quadrant to the manual release lever on the NLG uplock. The uplock releases and the NLG extends to the down and locked position.

By moving the manual release handle to the stowed position the landing gear extension and retraction system is reset for normal operation. However, landing gear retraction will only be initiated when the landing gear handle is moved to the UP position. After an actual gear failure situation, the manual release handle should be stowed only after landing and the gear pins are installed.

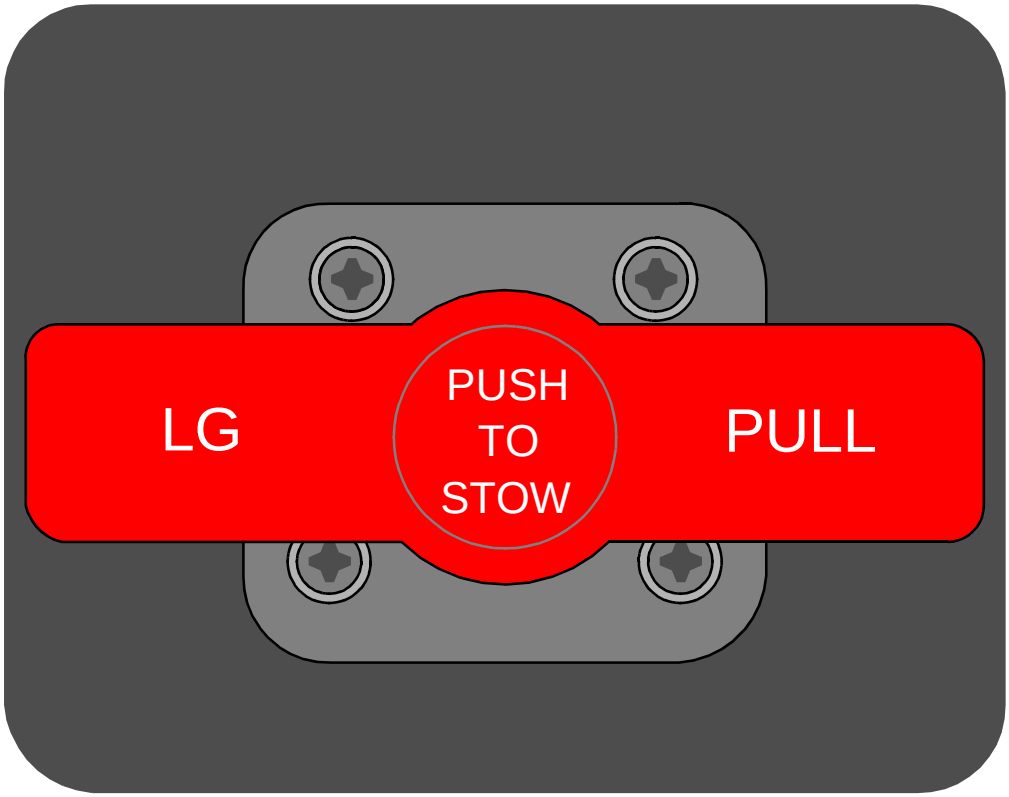

CFO1501002_017

TIRES AND BRAKES

DESCRIPTION

The Challenger 300 uses dual wheel assemblies and brakes on each main landing gear. The speed limit of all tires is 182 kt.

The nose gear has two wheels and uses chine tires to eject the ground water away from the aircraft engines.

To prevent tire burst, each main wheel has four heat sensitive fusible plugs. They melt when heat buildup in the wheel/tire assembly exceeds a preset value, permitting the tire to deflate safely.

The PARK/EMER BRAKE handle, located on center pedestal, is controlled from within the flight compartment. Anti-skid is not available when utilizing emergency brakes.

Wheel and brake overheat protection is provided by the MLG bay overheat detection system and indicated by CAS messages.

COMPONENTS AND OPERATION

Each wheel of the main landing gear is equipped with self-adjusting multidisc carbon brakes that provide stable braking control under all operating conditions.

The brake control system is partitioned into two separate braking channels. One channel controls the braking and anti-skid operation for the inboard wheels while the second controls the outboard wheels. Each braking channel is powered by an independent hydraulic system and an independent electrical power source. The brake control system provides brake pressure application, antiskid protection, touchdown protection, locked wheel crossover protection, gear retract braking and pressure control functions.

The system is armed when the landing gear is selected down or when ground mode is detected, by energizing the inboard and outboard shutoff valves, permitting hydraulic pressure to reach the inboard and outboard brake control valves. Ground mode is established by confirmation of either left or right weight on wheels inputs from the proximity sensors that indicates ground for more than 5 seconds or when wheel spin-up of greater than 50 kts is achieved. Full braking authority and differential braking is available to both the pilot and copilot. The brake control unit (BCU) uses the greater input of the two for the pedal brake command. The system provides low initial pressure gain to provide suitable pedal force to brake torque characteristics for adequate directional control during taxi.

Each braked wheel is fitted with a wheel speed transducer. The BCU monitors the wheel speed transducers to provide independent ant-skid protection down to 10 kts to each of the main wheels and to determine wheel speed thresholds for spin-up override and locked wheel crossover protection. The BCU also uses the wheel speed transducers to provide wheel speed outputs for spoiler and thrust reverser deployment.

The BCU commands a brake pressure of 350 psi for 4 seconds during gear retraction to ensure the main wheels have stopped spinning as they enter the main landing gear bay.

The shutoff valves hydraulically disarm the BCS by removing hydraulic pressure to the brake control valves during flight when the following requirements have been met:

- Weight-off -wheel on both main landing gears
- Landing gear handle is up
- Wheel speeds and velocity reference equal zero

Two brake wear indicator pins installed on each brake assembly provide a visual indication of brake wear. Before conducting the visual indication of the brake wear indicator pins, the parking brake must be set. Service the brakes when the end of the wear indicator pin is flush with the top of the indicator housing.

NOTE: The brake wear indicator pins must be checked with the brakes applied and the left and right hydraulic systems pressurized.

TIRES AND BRAKES (Cont)

PARK/EMER BRAKE

The aircraft is equipped with an emergency/parking brake system for parking or braking the aircraft when the normal brakes are inoperative. The PARK/EMER BRAKE handle, when set will prevent the aircraft from rolling.

The emergency/parking brake control system is a hydro-mechanical system controlled by the PARK/EMER BRAKE handle mounted on the cockpit center pedestal. The PARK/EMER BRAKE handle increases brake pressure when pulled up and decreases brake pressure when allowed to return down. The park brake function is initiated by pulling the handle up until it latches. The handle is released from this position by pulling up, pushing and holding the button on the end, and allowing the handle to retract down.

The emergency/parking brake valve meters hydraulic system pressure to all four main wheel brakes as commanded by the flight crew through the handle. Hydraulic pressure from the emergency/parking brake valve is connected to each of the main wheel brakes by shuttle valves. Differential braking is not possible with PARK/EMER BRAKE handle, and does not provide anti-skid protection.

To prevent hydraulic fluid migration from the right system to the left system, setting and releasing the PARK/EMER BRAKE must be done in a specific sequence. If the toe brake pedals are depressed prior to setting the PARK/EMER brake, then the toe brake pedals should be depressed again prior to releasing the PARK/EMER BRAKE. If this sequence is not followed, eventually the left hydraulic system will become over-full and the right hydraulic system will be low. The reason for this is that if the toe brake pedals are depressed and then the PARK/EMER BRAKE is set, hydraulic fluid from the right system is used to pressurize the outboard brakes. If the toe brakes are released and then the PARK/EMER BRAKE is released, the trapped hydraulic fluid will return to the left hydraulic system.

The accumulator in the left hydraulic system allows extended parking, or at least six emergency brake pressure applications. Accumulator pressure information is provided to the flight crew by a pressure transducer.

The EICAS indicates normal parking brake engagement or any fault detected in the form of a visual/or aural message.

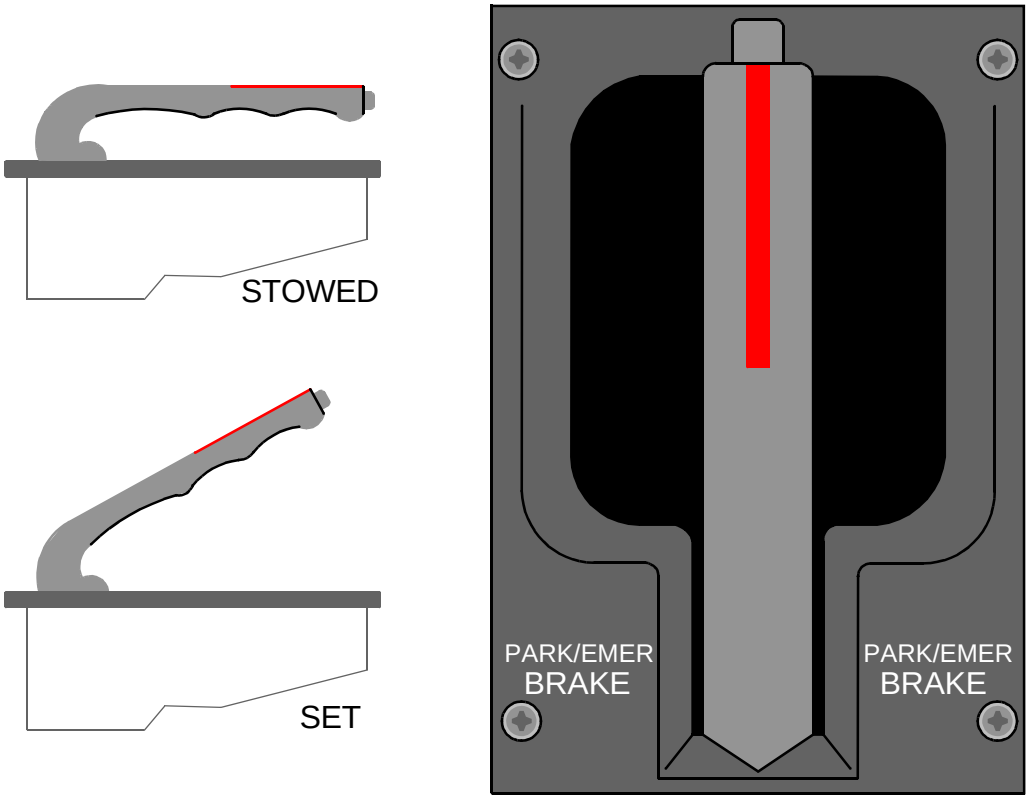

CFO1501002_019

TIRES AND BRAKES (Cont)

BRAKE CONTROL SYSTEM

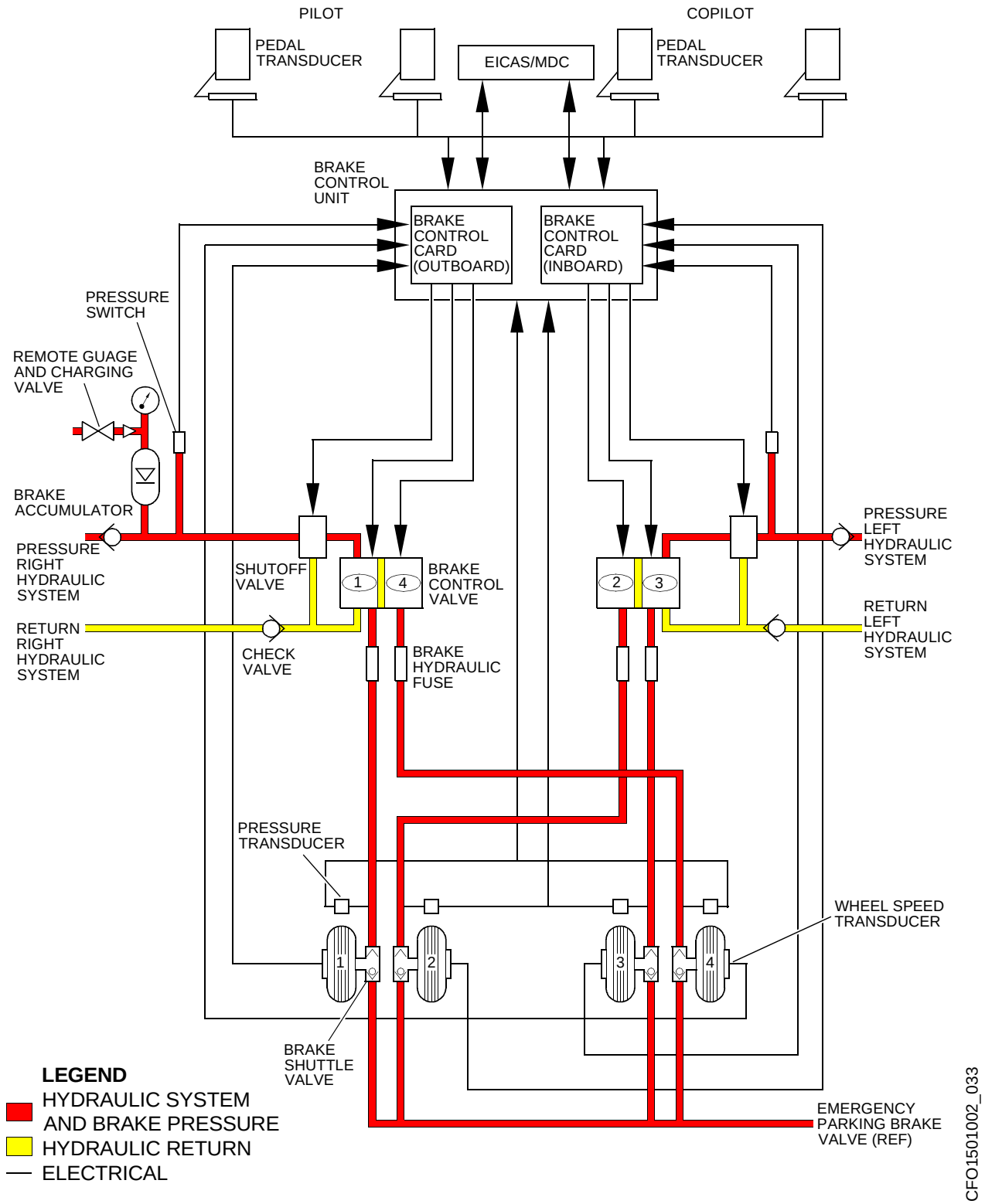

TIRES AND BRAKES (Cont)

MAIN AND PARK/EMER BRAKE ACCUMULATORS

The main and park/emergency brake accumulators are located on the aft side of the underwing fairing support frame. The parking/emergency brake accumulator is connected to a gauge and charge valve that is located in the rear fuselage battery compartment.

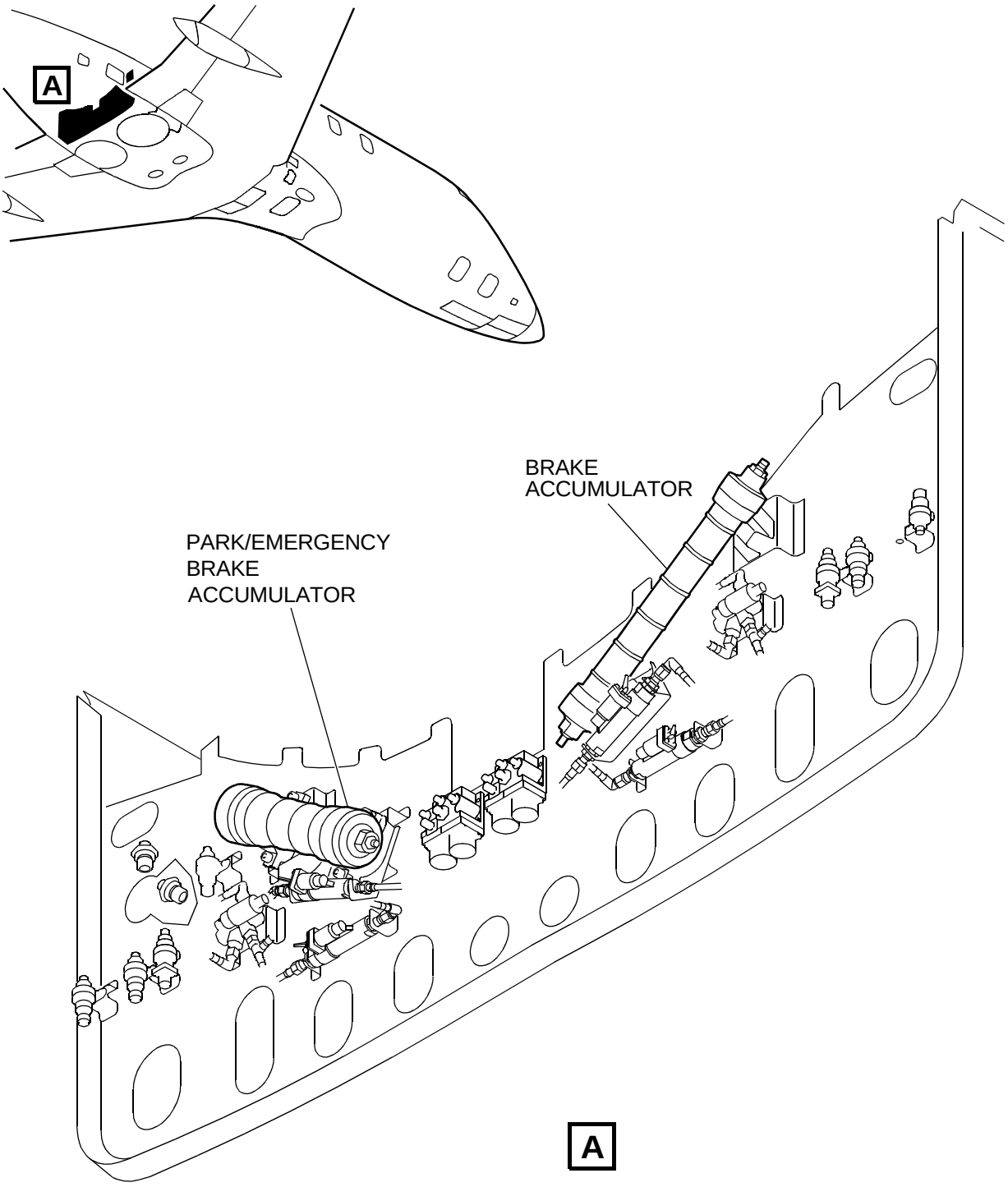

CFO1501002_029

TIRES AND BRAKES (Cont)

ANTI-SKID

DESCRIPTION

The anti-skid function controls brake pressure to prevent skids.The brake control unit provides antiskid protection down to 10 kts to each of the main wheels. Rotation speed of each wheel and its rate of deceleration are sensed by the wheel speed transducers and this data is transmitted to the brake control unit. The brake control unit modulates the hydraulic pressure at the brake to prevent wheel lockup.

The system prevents lockup by comparing the speed of each wheel installed on the same landing gear assembly. It also compares the speed between each wheel of the same brake system, outboard or inboard. For example, if the right inboard wheel rotates at a significantly slower speed than the left inboard, the brake control unit releases the brake on the slower turning wheel. When both paired wheels return to the same speed, the brake control unit reapplies brake pressure.

NOSEWHEEL STEERING

DESCRIPTION

The nosewheel steering is designed to provide safe and reliable directional control of the aircraft during all phases of taxi, takeoff and landing. The nosewheel steering provides electrically controlled and hydraulically powered actuation of the nose landing gear steering actuator mounted on the nose gear assembly. When the nosewheel steering is not armed, or under failure conditions, the system continues to provide effective damping to ensure dynamic stability of the nose landing gear.

The Nosewheel Steering System (NWS) is armed by selecting the NWS switch on. The NWS switch is located on the LANDING GEAR control panel and is illuminated when it is in the OFF position. Steering commands are input to the steering control unit (SCU) through the pilot handwheel (full authority, ±65° at the nose wheel) and/or through the rudder pedals (limited authority, ±7° at the nose wheel). Position feedback is provided to the SCU from a position transducer on the NLG. There is no mechanical connection between the flight deck controls and the steering actuators. Nosewheel steering commands are transmitted electronically using “steer-by-wire” technology.

COMPONENTS AND OPERATION

STEERING CONTROL UNIT

The steering control unit (SCU) controls the electro-hydraulic steering valve to port hydraulic fluid to either end of the steering actuator to turn the nose gear. Hydraulic pressure will move the rack, which in turn engages and rotates the pinion gear on the steering cuff. Mechanical torque links transmit the movement of the steering cuff to the nose landing gear axle. Nosewheel feedback is sent to the SCU from transducers mounted on the steering actuator. The SCU continuously monitors the NWS. Fault detection results in steering system shutdown. Any faults detected are annunciated as CAS messages. When the steering system is shutdown or disarmed, the SCU reverts the nosewheel steering to free-castering mode.

WARNING: - Prior to taxi, ensure that the nosewheel assembly is clear of personnel and towing equipment before selecting the nosewheel steering to the on position.

The system is operable when:

- Left hydraulic system is pressurized
- Nose landing gear is down
- The locked and a weight-on-wheels signal is present
- NWS selected on

STEERING CONTROL SYSTEM

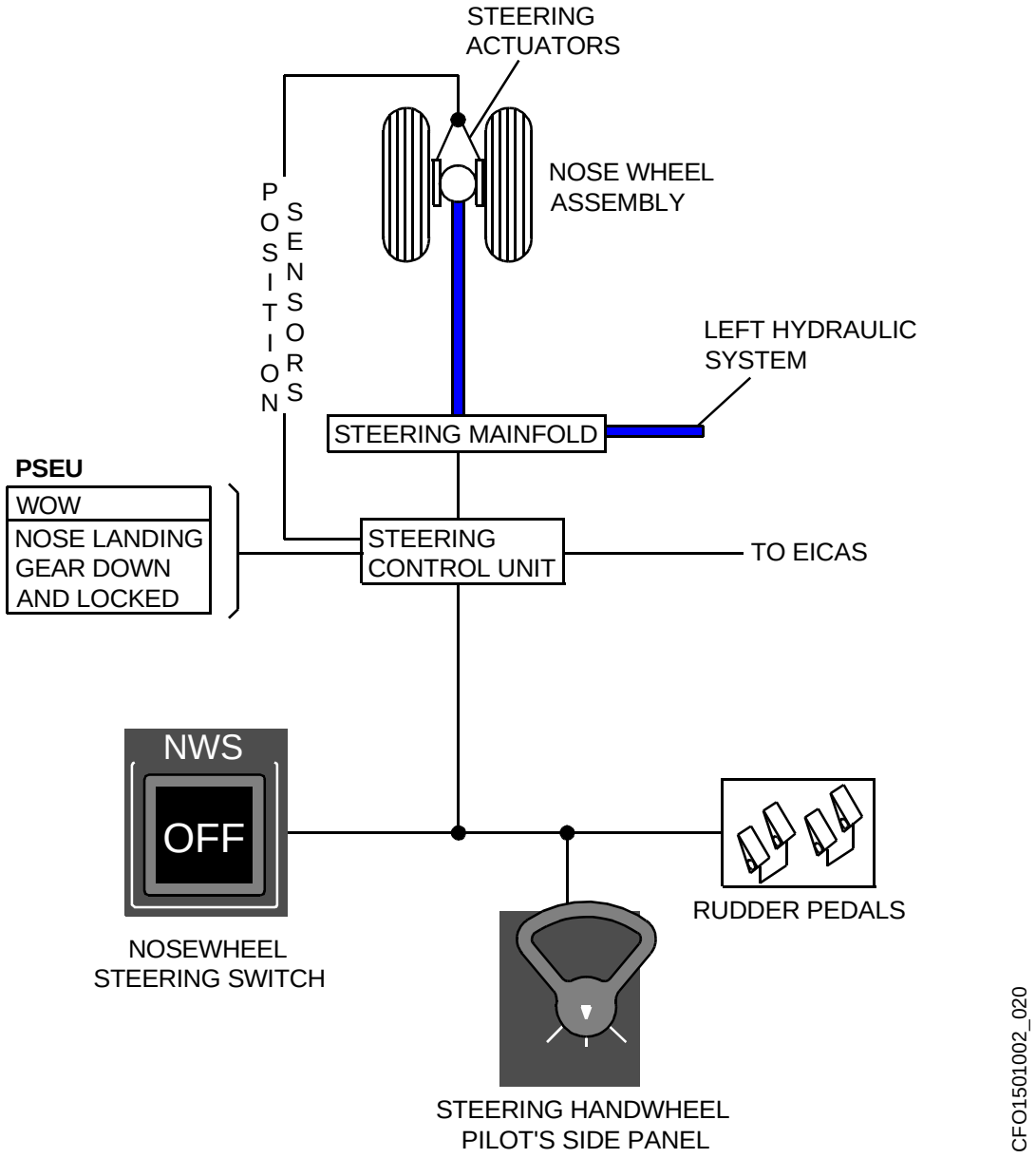

LANDING GEAR INDICATIONS

The EICAS landing gear indications provide the pilots increased situational awareness regarding the position and condition of the landing gear.

LANDING GEAR DOWNLOCKED "SAFE":

ONE OF THE TWO REDUNDANT DOWNLOCK SENSORS DETECTS THAT THE GEAR IS DOWN AND LOCKED

LANDING GEAR UP:

UPLOCK SENSOR DETECTS GEAR UP AND BOTH DOWNLOCK SENSORS DETECT GEAR NOT DOWNLOCKED

GEAR UP AND NO GEAR WARNING AND EITHER NO GEAR DISAGREE OR GEAR DISAGREE WITH HANDLE UP

GEAR UP AND NO GEAR WARNING AND GEAR DISAGREE AND GEAR HANDLE NOT UP

GEAR UP AND GEAR WARNING

LANDING GEAR IN TRANSIT:

UPLOCK AND DOWNLOCK SENSORS DETECT GEAR IS NOT LOCKED

GEAR IN TRANSIT AND NO GEAR DISAGREE AND NO GEAR WARNING

GEAR IN TRANSIT AND GEAR DISAGREE AND NO GEAR WARNING

GEAR IN TRANSIT AND GEAR WARNING

DATA FROM BOTH PSS SUBSYSTEMS NOT AVAILABLE OR INVALID

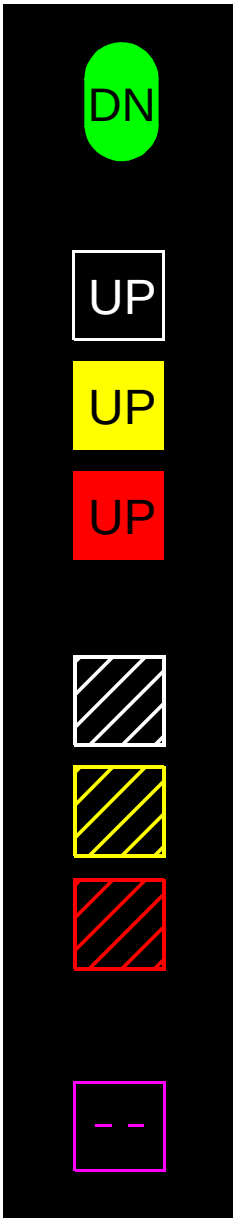

CFO1501002_021

CONTROLS AND INDICATIONS

DESCRIPTION

Flight deck controls activate normal gear extension and retraction, emergency extension, nosewheel steering, and warning horn mute.

The EICAS presents indications of landing gear operation.

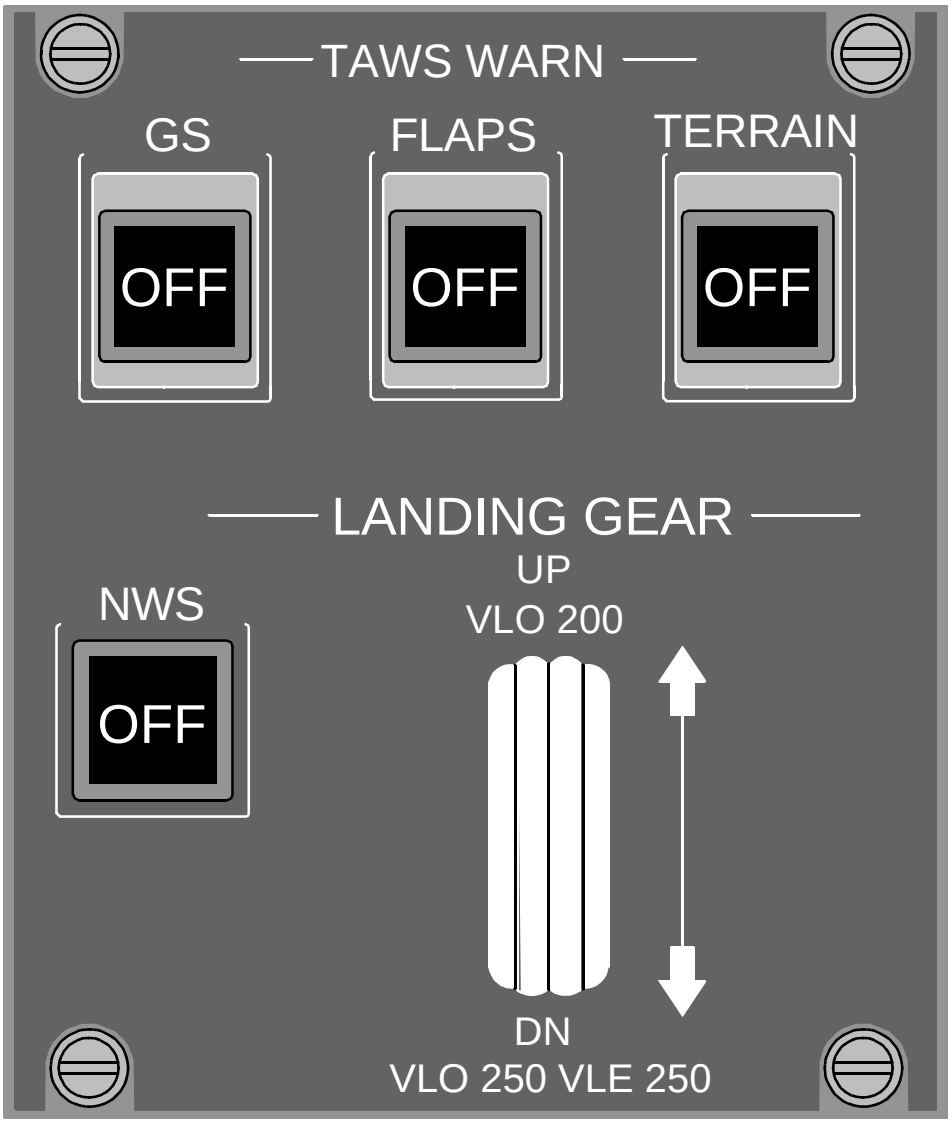

CFO1501002_007

CONTROLS AND INDICATIONS (Cont)

LANDING GEAR (UP)

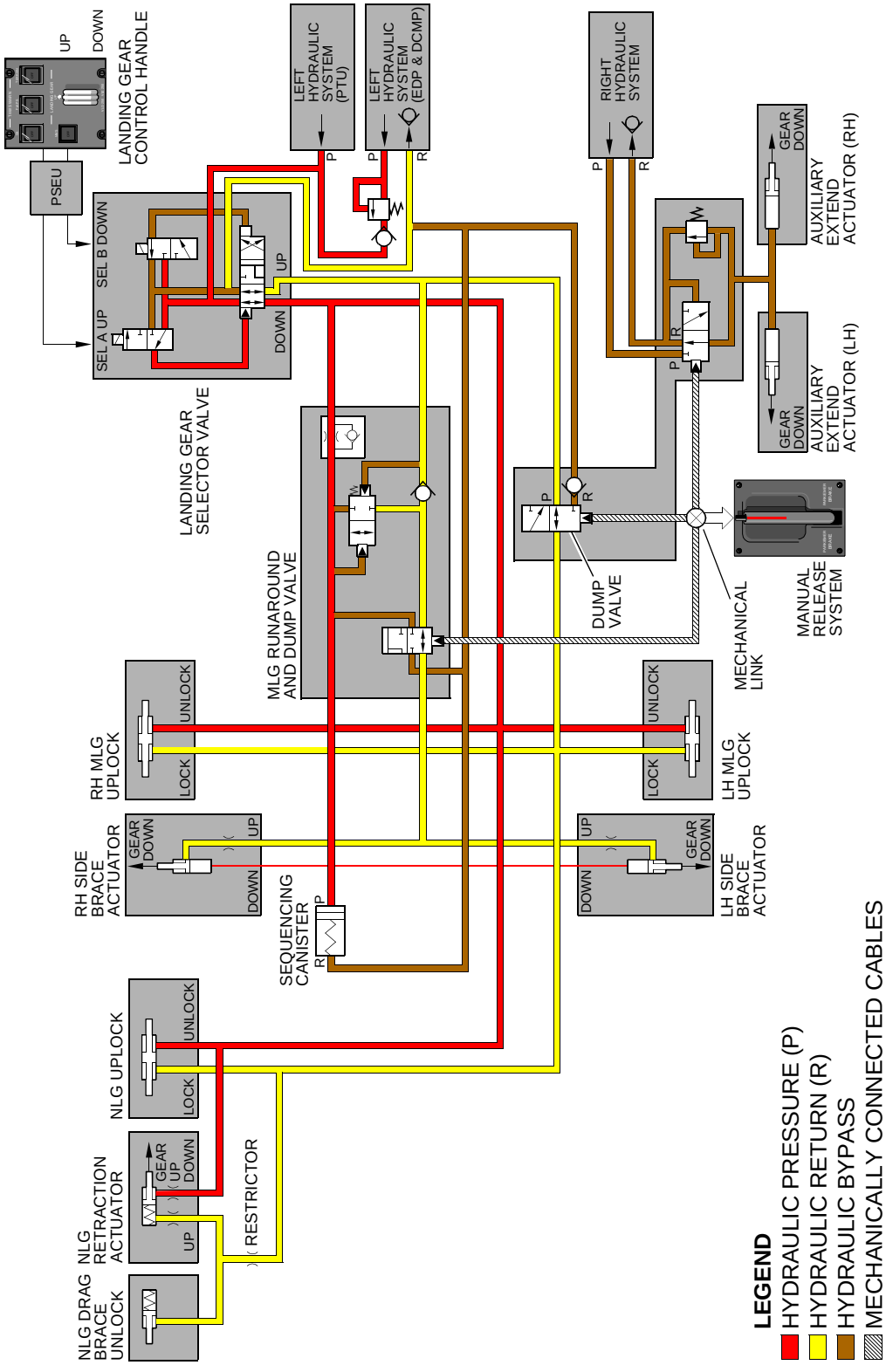

CONTROLS AND INDICATIONS (Cont)

LANDING GEAR (DOWN)

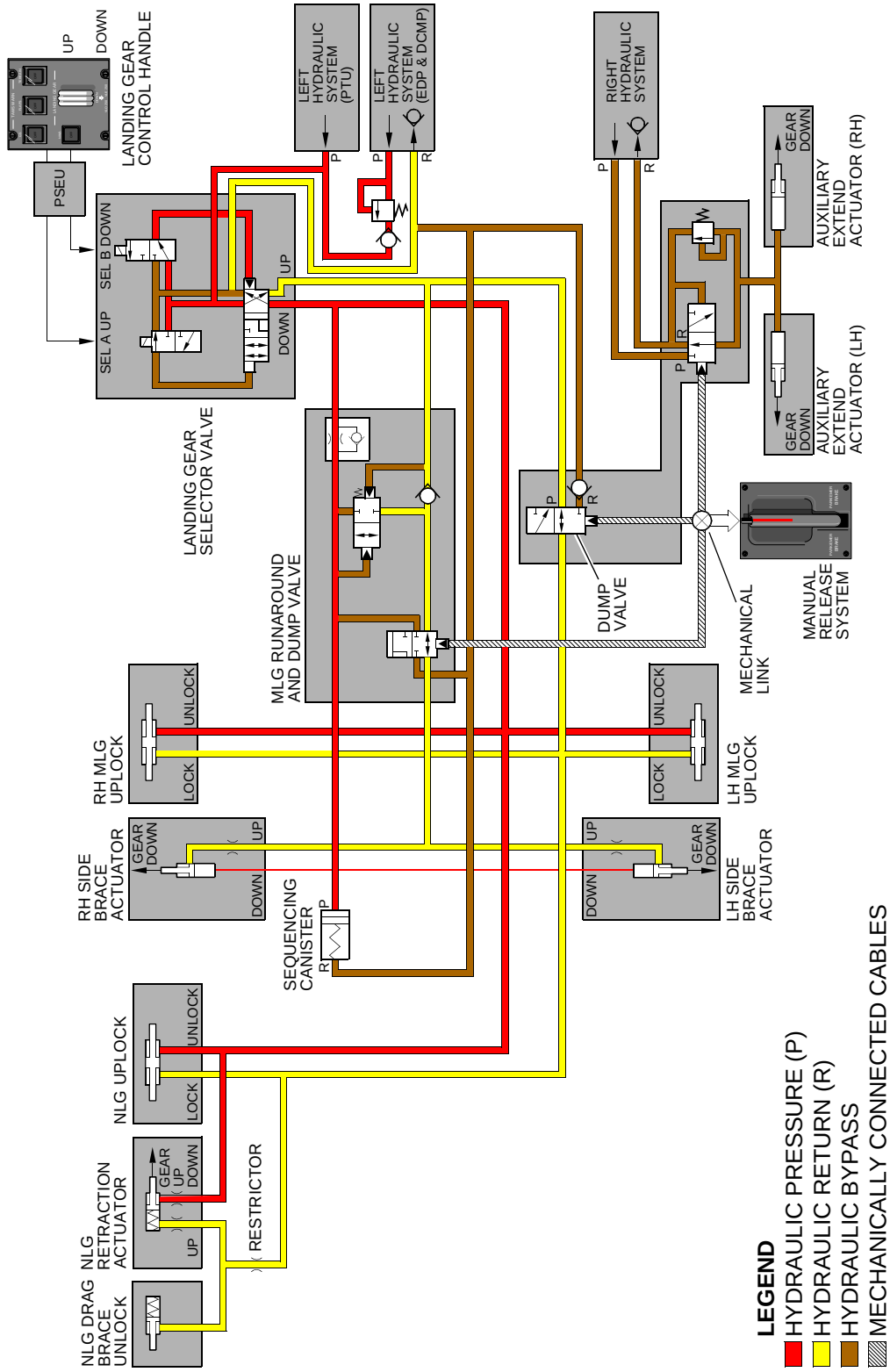

CONTROLS AND INDICATIONS (Cont)

NWS SWITCH

NOSEWHEEL STEERING TILLER

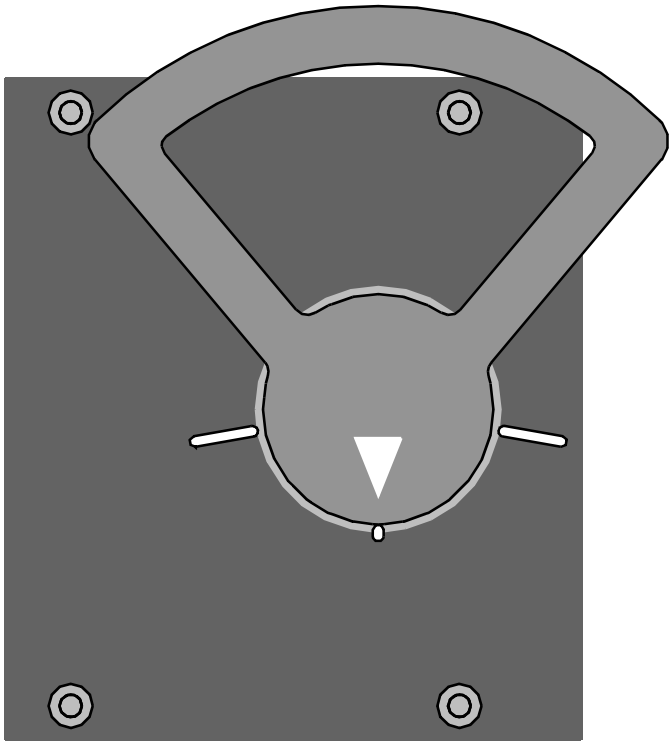

CFO1501002_025

LANDING GEAR INDICATION

In flight, landing gear position indication is provided on the EICAS.

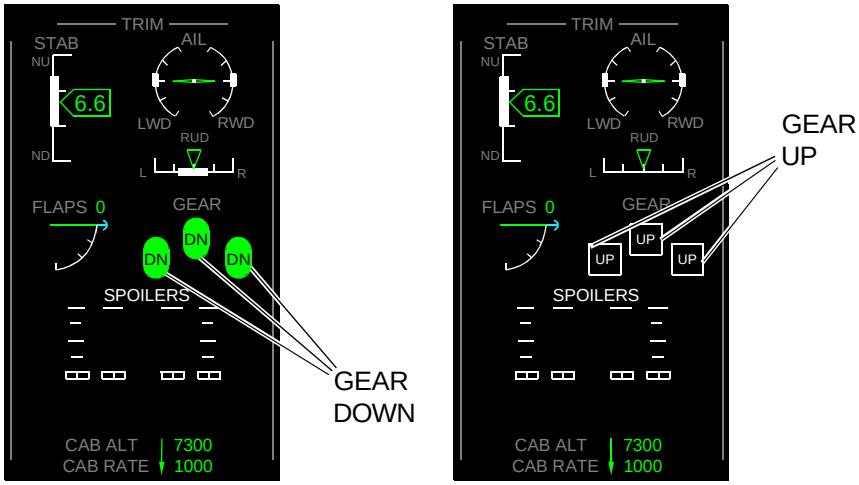

CFO1501002_006

EICAS MESSAGES

The landing gear system messages are shown on the EICAS. In the table below, the landing gear system messages, inhibits and aural warnings are listed. A brief explanation of each message is provided.

MESSAGE	INHIBITS	MEANING	AURAL WARNING
GEAR		The GEAR CAS will be accompanied by a gear icon on the MFD for each gear that is not down and locked	"Gear"
GEAR BAY OVHT	TO/LAND	An overheat condition has been detected in the main landing gear bays	
NORM BRAKES FAIL	TO	The NORM BRAKES FAIL CAS indicates that all normal brakes have failed.	"Normal brakes fail"
BRAKE FAULT	TO	One or both pairs (inboard and/or outboard) of the brake pressure transducers has failed	
CPLT BRAKE FAULT	TO	One or more of the copilot's brake pedal sensors (LVDTs) has failed	
GEAR DISAGREE		This indicates that the landing gear position and the LANDING GEAR switch position do not match after the 28 second delay	
GEAR SYS FAIL	TO	This indicates a complete failure of the gear control or the loss of the ARINC 429 signal from both channels. There is a potential for the loss of gear, door and/or spoiler indications	
L (R) INBD BRAKE FAIL	TO	The respective (left or right but not both) inboard normal system brake has failed	
INBD BRAKE PRESS LO	TO	The INBD brake accumulator pressure is less than 1400 psi	
INBD BRAKES FAIL	TO	Both inboard normal system brakes failed	
NOSE GEAR DOOR	TO/LAND	The nose gear doors are not closed and the nose gear is up	
NWS FAIL		The nose wheel steering system has failed. In the event the nose wheel steering system malfunctions, internal monitors should disconnect the system allowing the nose wheels to castor	
NWS LIMIT EXCEEDED		The nose wheel steering turning limit has been exceeded. There may be damage to the NLG feedback link	
L (R) OUTBD BRAKE FAIL	TO	The respective (left or right but not both) outboard normal system brake has failed	

EICAS MESSAGES (Cont)

MESSAGE	INHIBITS	MEANING	AURAL WARNING
OUTBD BRAKE PRESS LO	TO	The OUTBD brake accumulator pressure is less than 1400 psi	
OUTBD BRAKES FAIL	TO	Left and right outboard normal system brakes have failed	
PARK/EMER BRAKE ON	TO	Park brake pressure is sensed with weight-off-wheels. Do not cycle handle more than one time	
PK/EMER BRK PRESS LO	TO	The INBD brake accumulator pressure is too low for full PARK/EMER brake performance (below 1200 psi). Normal brakes should function properly	
PLT BRAKE FAULT	TO	One or more of the pilot's brake pedal sensors (LVDTs) has failed	
WOW FAIL	TO	One or more of the following conditions exist: - Failures have been detected in two or more Weight On Wheels (WOW) sensors - Any disagreement or hardware failure of one or more WOW outputs associated with a critical function	
BRAKE FAULT	TO/LAND	A minor brake system fault has occurred that does not affect brake performance. A subsequent brake failure could cause uncommanded braking	
NWS FAULT	TO/LAND	The nose wheel steering selector valve is open. The system will operate normally	
PROX SYS FAULT	TO/LAND	This indicates a failure in the proximity sensor channel or the loss of the signal from one of the channels	
NWS OFF		The nose wheel steering has been selected OFF	
PARK/EMER BRAKE ON		Park brake pressure is sensed while on the ground	

Table of Contents

Introduction 16-00-01
Aircraft Lighting 16-01-01
Introduction 16-01-01
Flight Compartment Lighting 16-01-01
Description 16-01-01
Components and Operation 16-01-01
Cockpit Lighting 16-01-01
Left Cockpit Lights Panel 16-01-03
Right Cockpit Lights Panel 16-01-04
Standby Instrument Lighting 16-01-05
Chart Holder and Map/Reading Lights 16-01-06
Flashlights 16-01-06
Emergency Lighting 16-01-07
Description 16-01-07
Components and Operation 16-01-07
External Lights 16-01-08
Components and Operation 16-01-08
Entrance and Cabin Lighting 16-01-09
Components and Operation 16-01-09
Airstair Lighting 16-01-10
Cargo and Service Compartments Lighting 16-01-11
Components and Operation 16-01-11
External Aircraft Lighting 16-01-12
EICAS Messages 16-01-13

AIRCRAFT LIGHTING

INTRODUCTION

The Challenger 300 lighting system provides interior and exterior illumination of the aircraft. In addition, lights provide information and guidance to passengers in normal and emergency situations.

The lighting systems includes:

- Flight compartment lighting
- Emergency lighting
- Passenger compartment lighting
- Service compartment lighting
- Entrance lighting
- External lighting

The flight compartment and external lighting is selected from the lighting control panels located on the center pedestal and along the flight crew side panels.

Passenger compartment lighting consist of indirect LED lighting and adjustable reading lights placed in the overhead passenger service unit (PSU).

Emergency lights are controlled from the flight deck. When armed, they illuminate automatically when R MAIN BUS power has been lost (total loss of generated electrical power). Emergency lighting is provided to the emergency power supply units and are designed to last a minimum of ten minutes at critical ambient conditions, such as low temperature.

EICAS messages display the status of the emergency lights and passenger signs.

FLIGHT COMPARTMENT LIGHTING

DESCRIPTION

The cockpit lighting provides illumination of all control panels and instruments installed in the flight compartment that are not otherwise illuminated by their own integral lighting system or display. They include the following:

- Cockpit Dome Light
- Cockpit Stowage Light
- Flight Crew Reading Lights
- Integral Lighting System

COMPONENTS AND OPERATION

COCKPIT LIGHTING

The cockpit dome light sub-system consists of one light unit. The cockpit dome light is mounted in the overhead fascia panel of the cockpit for general illumination of the cockpit and the cockpit entrance area.

One cockpit stowage light is used to illuminate the cockpit stowage box, and it is mounted on the aft end of the center pedestal. The switch for this light is activated by the stowage door, so that the light illuminates only when the door is open.

Two flight crew reading lights are provided to illuminate the pilot and copilot's lap area. They are recessed in the headliner on each side of the cockpit, to avoid head impact to the pilots.The light can be rotated up to $\pm$ 30°. It includes a built-in shutter with an ON/OFF position and continuous light intensity adjustment from bright to dim.

The integral lighting system is divided into four control zones as follows:

- Zone 1 - Pilot panel and part of glareshield
- Zone 2 - Center pedestal
- Zone 3 - Copilot panel and part of the glareshield
- Zone 4 - Circuit breaker panels

A brief explanation of the panels, locations, and the zones they control follows:

FLIGHT COMPARTMENT LIGHTING (Cont)

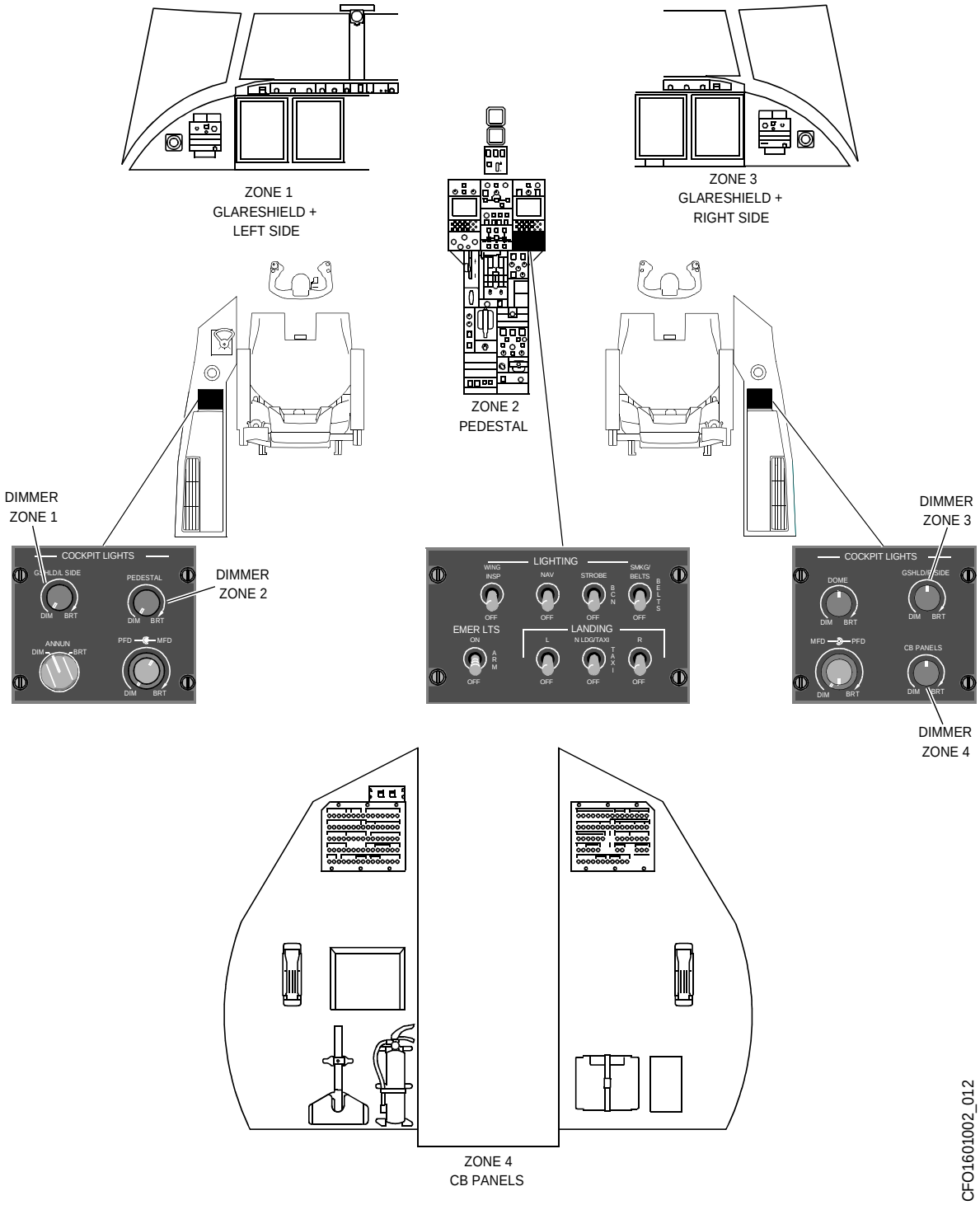

FLIGHT COMPARTMENT LIGHTING (Cont)

LEFT COCKPIT LIGHTS PANEL

The left COCKPIT LIGHTS panel is powered by 28 vdc.

A description of each of the potentiometer controls located on the left COCKPIT LIGHTS panel is as follows:

GSHLD/L SIDE

Dimming the fluorescent light beneath the left side of the glareshield is controlled via this potentiometer.

PEDESTAL

This potentiometer controls the lighting intensity of equipment installed in the pedestal. The FMS display intensity is regulated by the dim button on the FMS control panel.

ANNUN

This push button switch controls the brightness of the other switches from DIM to BRT as well as off.

PFD/MFD

Display units have internal lighting, and the intensity is controlled through the PFD/MFD potentiometer.

FLIGHT COMPARTMENT LIGHTING (Cont)

RIGHT COCKPIT LIGHTS PANEL

The right COCKPIT LIGHTS panel is powered by 28 vdc.

Following is a description of each of the potentiometer controls located on the right COCKPIT LIGHTS panel.

DOME

The center overhead dome light is controlled by the DOME potentiometer. The pilot dome light can also be turned on with the COCKPIT light switch on the main entryway control panel when the cabin door is open and the DOME control is off. When the cabin door is closed, cockpit overhead light control from the main entryway control panel is disabled. The dome light is powered by the right main bus and is protected by the DOME circuit breaker within the CABIN group on the copilot circuit breaker panel. When the pilot dome light is controlled via the main entryway switch, it receives power from the airplane hot bus system.

GSHLD/R SIDE

Dimming the right hand side panel and the copilot DCP is controlled via this potentiometer.

MFD — PFD

Display units have internal lighting, and the intensity is controlled by the MFD/PFD potentiometer.

CB PANELS

This potentiometer controls the intensity of lighting to the pilot and copilot circuit breaker panels.

FLIGHT COMPARTMENT LIGHTING (Cont)

STANDBY INSTRUMENT LIGHTING

The standby instrument lights are designed to supply lighting to the three standby instruments. When left main bus power to the cockpit lights is lost, power to the standby lights is automatically switched to the right essential bus.

These standby instruments are as follows:

- Standby compass
- Standby instrument
- Clock

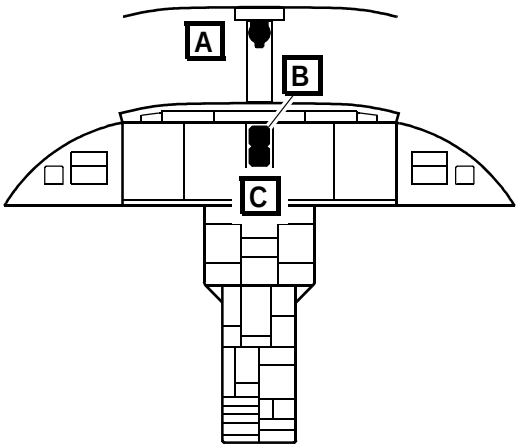

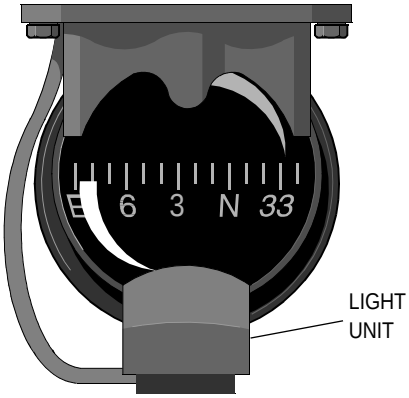

STANDBY COMPASS

A

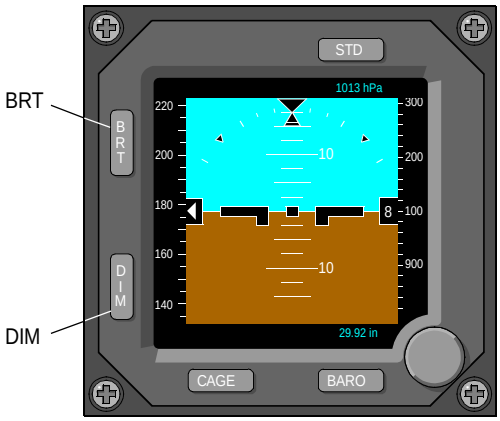

STANDBY INSTRUMENT

B

CLOCK

C

CFO1601002_023

FLIGHT COMPARTMENT LIGHTING (Cont)

CHART HOLDER AND MAP/READING LIGHTS

Chart holders are mounted on the control yokes, and the lights are integral to the chart holders.There are overhead lights that shine downward onto the crew lap area for map/reading lighting.

Individually controlled reading lights are installed in the overhead panel. Light intensity is adjusted by a dimmer knob above each unit.

FLASHLIGHTS

Flashlights are installed in holders behind the pilot's and copilot's seats, below the circuit breaker panels. Flashlights are also located in the lavatory area of the cabin.

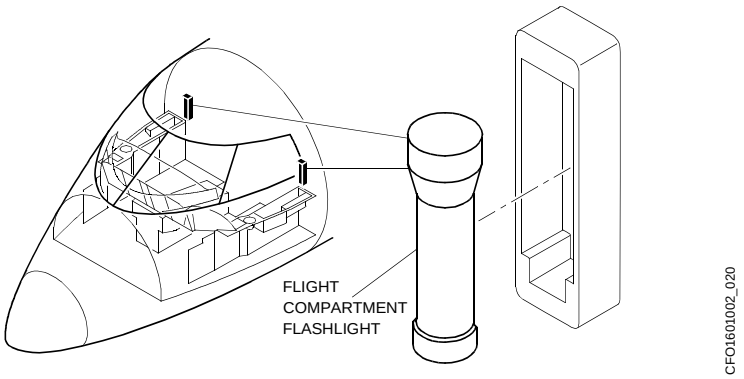

EMERGENCY LIGHTING

DESCRIPTION

Emergency lighting contributes to the safe exit of passengers during an emergency. The emergency lighting system consists of the following:

- Exit signs
- Ceiling emergency floodlights
- Floor emergency floodlights
- Exterior emergency lights

COMPONENTS AND OPERATION

Emergency lights are powered by two independent rechargeable battery packs that provide 15 minutes of power. The lights are controlled by a switch on the LIGHTING control panel. During an emergency, exterior emergency lights will provide illumination of the aircraft's immediate area. When the battery switch is ON and the EMER LTS switch is OFF, an EMER LIGHTS OFF (C) message is displayed. When the EMER LTS switch is selected to ON, the emergency lights illuminate and the amber EMER LIGHTS ON (C) message is displayed. When the switch is in the ARM position and the 28 VDC R MAIN BUS power is lost, all interior and exterior emergency lights illuminate automatically.

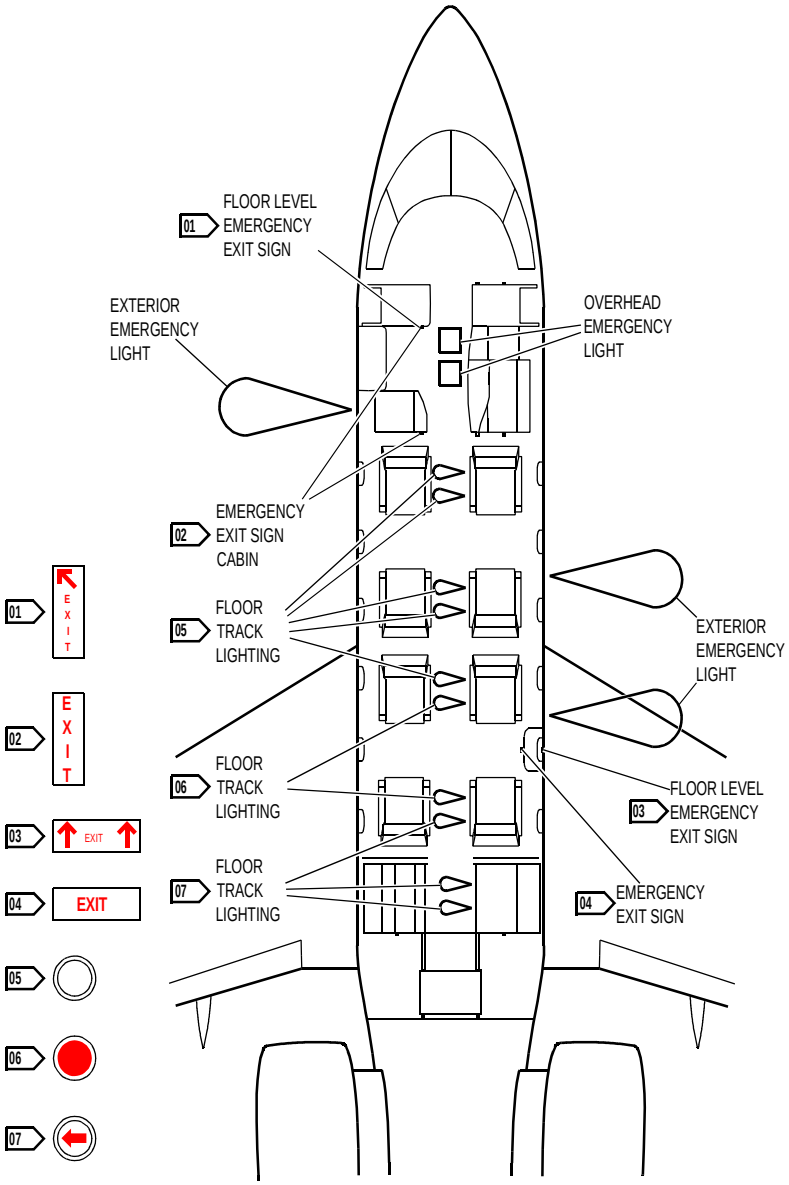

CFO1601002_022

EXTERNAL LIGHTS

The following external lights make the aircraft visible to other aircraft and controllers:

- Anti-collision strobe lights
- Wing tip anti-collision strobe lights (optional)
- Logo lights (optional)
- Navigation lights
- Rotating beacons

COMPONENTS AND OPERATION

The wing inspection lights are mounted on the either side of the fuselage to visually inspect the wing for ice formation.

The navigation lights allow visual tracking as well as orientation or position of an airplane relative to an observer. The wing tip navigation lights utilize a dual light system for increased dispatch reliability. This consists of a primary, and secondary unit under the same lens in each wing tip. If the primary navigation light fails, the secondary light will illuminate when the NAV switch located on the right secondary power center (right avionics rack circuit breaker panel) is selected. The tail navigation light also utilizes a dual light system. These consists of two identical high intensity halogen lamp in each unit. The upper unit is used as the secondary and the lower unit is used as the primary tail navigation light.The NAV switch controls the navigation lights and is located on the LIGHTING panel. Optional logo lights are mounted on the top rear of the engine pylons and are powered from the RH Aux bus. The NAV light switch is replaced with a three position switch to include the logo light option.

The strobe/beacon lights are supplied with power from a dedicated power supply. The color of the strobe/beacon light system can be selected white or red. The red light system will generally be used for ground operations since it minimizes the unfavorable effects on vision of the crew or on personnel outside the aircraft during ground handling. The light emission of the red light is reduced and cannot be used as a backup anti-collision light. The shape of the strobe/beacon lights minimizes aerodynamic drag. The STROBE BCN switch controls the red beacon lights, white anti-collision strobe lights and the optional wing anti-collision strobe lights. The flight data recorder (FDR) is activated as soon as the STROBE BCN switch is selected to either position.

The nose gear landing light is designed to illuminate the ground reference during the final approach, during takeoff and also to illuminate any major obstructions in the approach area or on the runway.

The taxi light, also mounted on the nose gear, is designed to illuminate the ground reference during takeoff and taxi. The N LDG/TAXI switch is a three position switch, with the center position only powering the taxi light. In the N LDG/TAXI position, both lights on the nose gear will illuminate. They are also controlled by the proximity-sensor electronic unit (PSEU) and powered when the landing gear is in the down and locked position.

The two high intensity discharge (HID) landing lights are incorporated in the wing-to body fairing. This system is designed to provide sufficient illumination for night landing and recognition and also to ensure that no objectionable glare is visible to the pilots. The L and R LANDING switches, located on the LIGHTING control panel, activates the left and/or right HID landing lights respectfully.

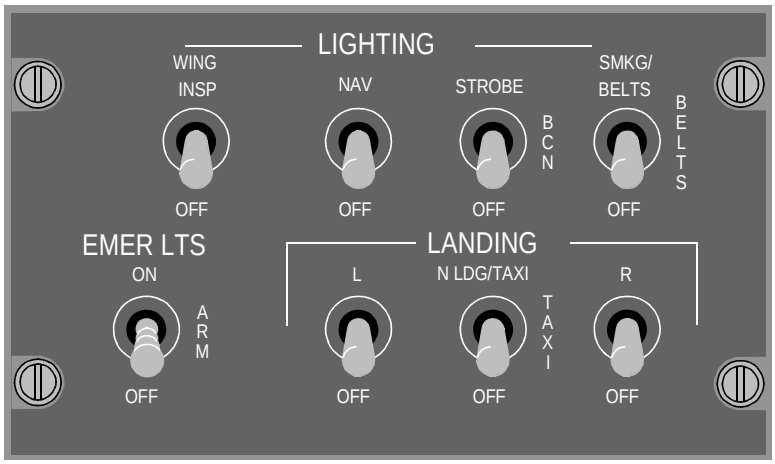

CFO1601002_011

ENTRANCE AND CABIN LIGHTING

COMPONENTS AND OPERATION

The stair lighting system contains seven stair lights. The stair lights contain four light-emitting diodes (LEDs) each and they receive 28 vdc electrical power from the L BATT BUS. The lights are controlled ON and OFF by the STAIR LIGHTS switch located on the wardrobe bulkhead aft of the passenger door. The lights are also controlled by a microswitch in the door frame that turn off the lights when the passenger door is in the closed and locked position.

Cabin lighting (except entry/exit lighting) is powered by the LEFT and RIGHT MAIN busses. Primary cabin lighting control is through the main entryway control panel which is located on the left storage cabinet, aft of the cabin door. An optional CABIN LIGHTS control panel is located on the center pedestal in the flight compartment.

Cabin lighting consists of:

CARGO BAY LIGHT

Selection of the cargo bay light is by a switch mounted inside the cargo bay. The switch is automatically switched off when the cargo bay door is closed. The cargo bay light is powered from the hot bus system

ENTRY/EXIT LIGHTS

The cabin entry/exit door light illuminates the passenger door steps. This light is controlled by the ENTRY light switch and is powered by the hot bus, regardless of the BATT switch position.

GALLEY LIGHTS

Fluorescent lighting is provided for the passenger refreshment area.

LAVATORY LIGHTS

Lavatory lights consist of two overhead spotlights (one located above the left cabin stowage area, and one located above the toilet) and wraparound overhead fluorescent lights (covered with lenses). Control of the spotlights is by the lavatory control panel and the main entryway control panel. The fluorescent light is controlled by the LAV LIGHT switch on the main entryway control panel and the LAV LIGHT switch on the lavatory control panel.

OVERHEAD LIGHTS

The overhead lights consist of indirect LED lighting located within the cabin passenger service unit. Covered by lenses, the overhead lights are controlled by the CABIN LIGHT switch on the main entry control panel.

PASSENGER READING TABLE LIGHTS

Reading and table lighting consists of lights installed in the passenger service unit above the seats on each side of the cabin. The seats have one light, while the table lights consist of a two-light assembly installed above each table. Control for the reading lights is by the seat-mounted control units.

SEAT BELTS/NO SMOKING LIGHTS

Control of the SMKG/BELTS is through a switch on the LIGHTING control panel, located on the center pedestal. The three-position switch is labeled OFF, BELTS, SMKG/BELTS.

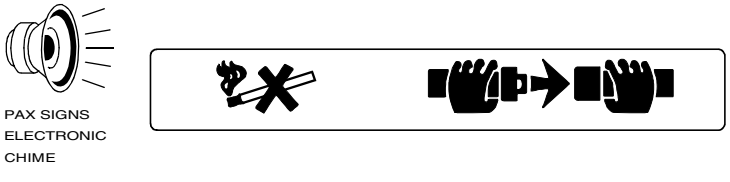

AIRSTAIR LIGHTING

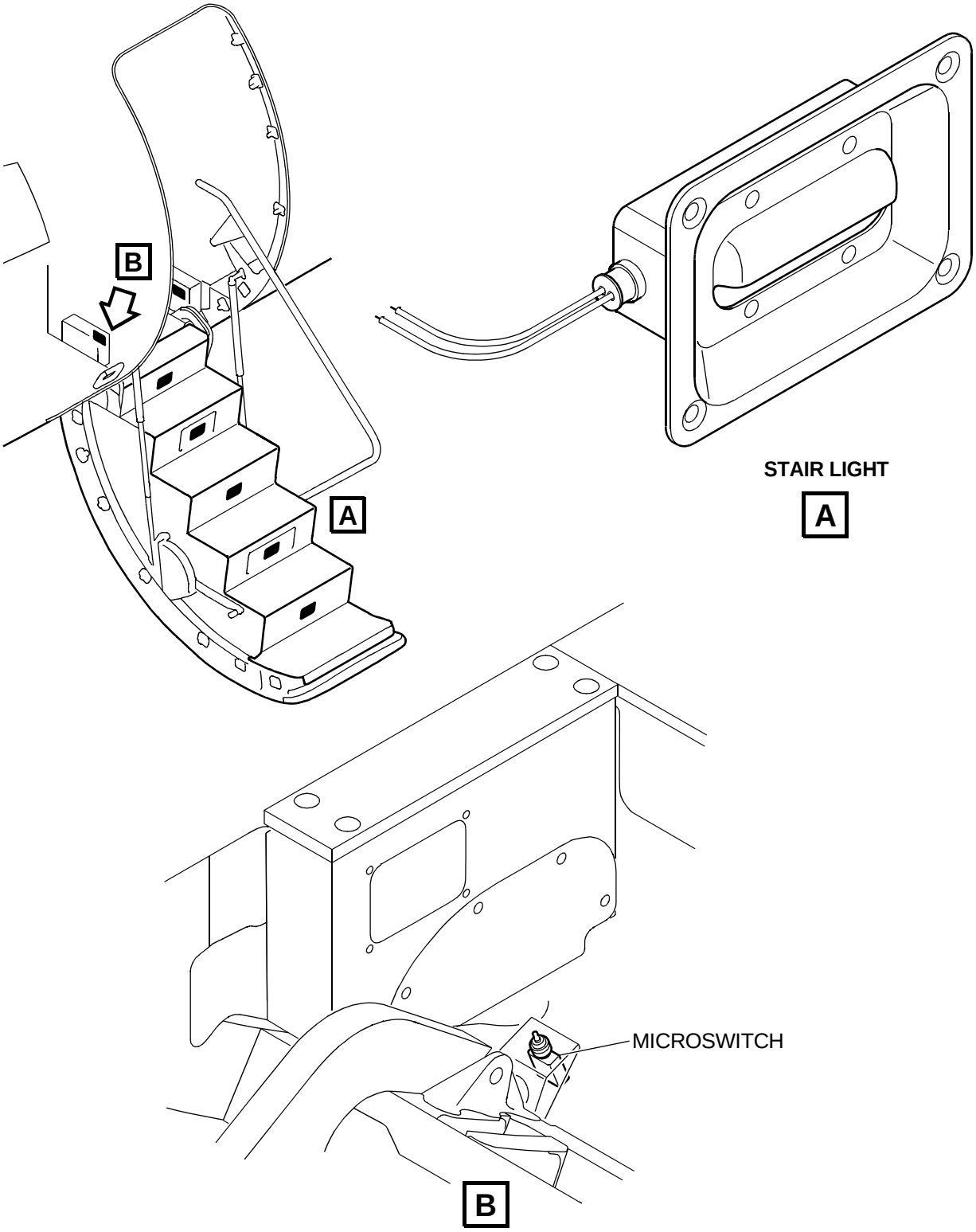

CARGO AND SERVICE COMPARTMENTS LIGHTING

COMPONENTS AND OPERATION

The cargo loading light is used for the area in front of the cargo door.

The service lights provide adequate lighting to the work area of the aircraft for general servicing, maintenance and inspection purposes. Two service lights are installed in the aft compartment to illuminate that area.

The auto shut-off box may be switched on by a single “click” on the push button. After 15 minutes in normal operation the output will automatically flash for a period of 10 seconds, then it will go back to normal operation for approximately 5 minutes. After 20 minutes of total time, the auto shut-off box automatically switches to standby mode. The timing interval can be reset/restarted by pressing the button again while the lights are on. The auto shut-off box may be switched from the normal operation to standby operation via two quick clicks.

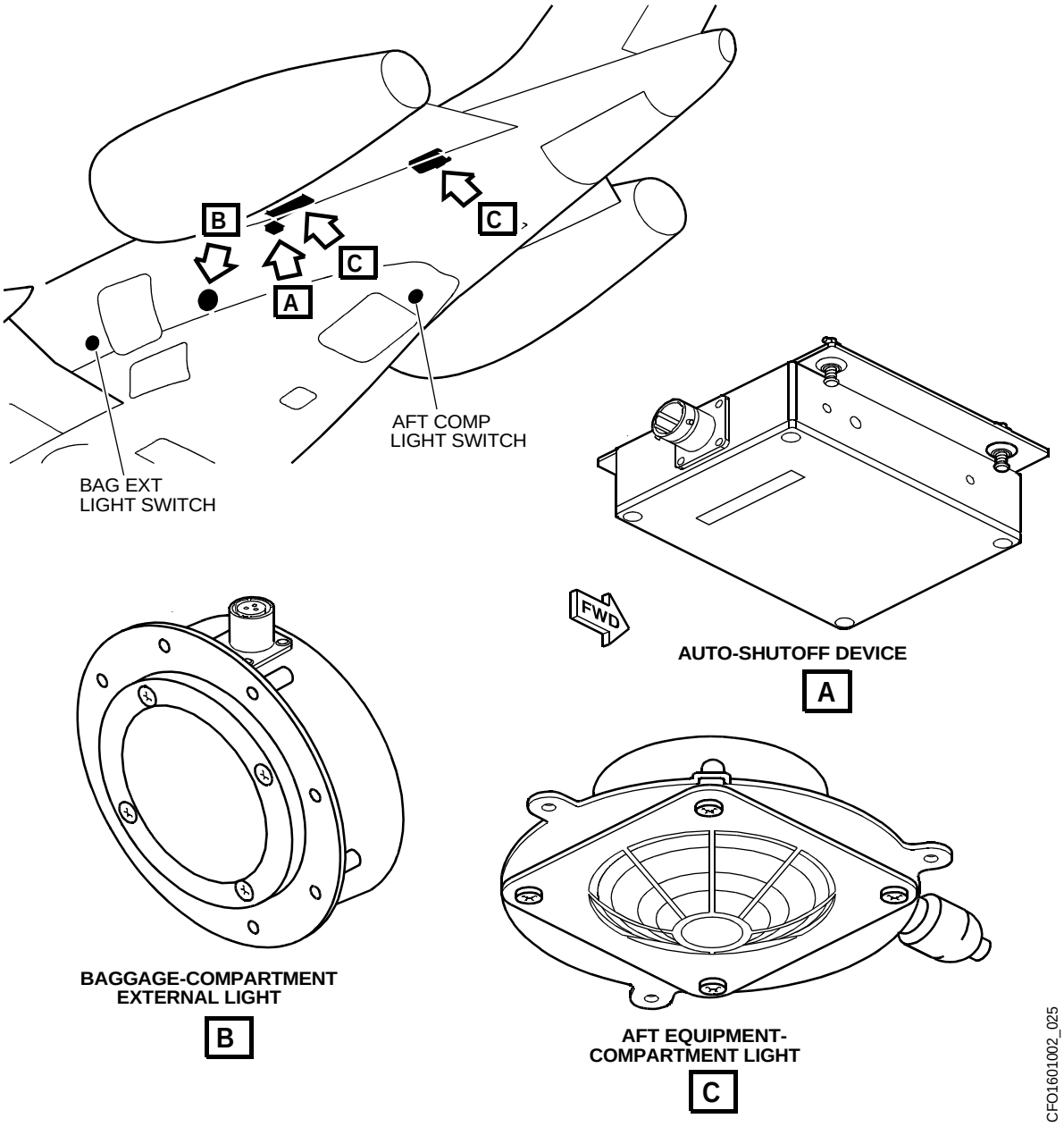

EXTERNAL AIRCRAFT LIGHTING

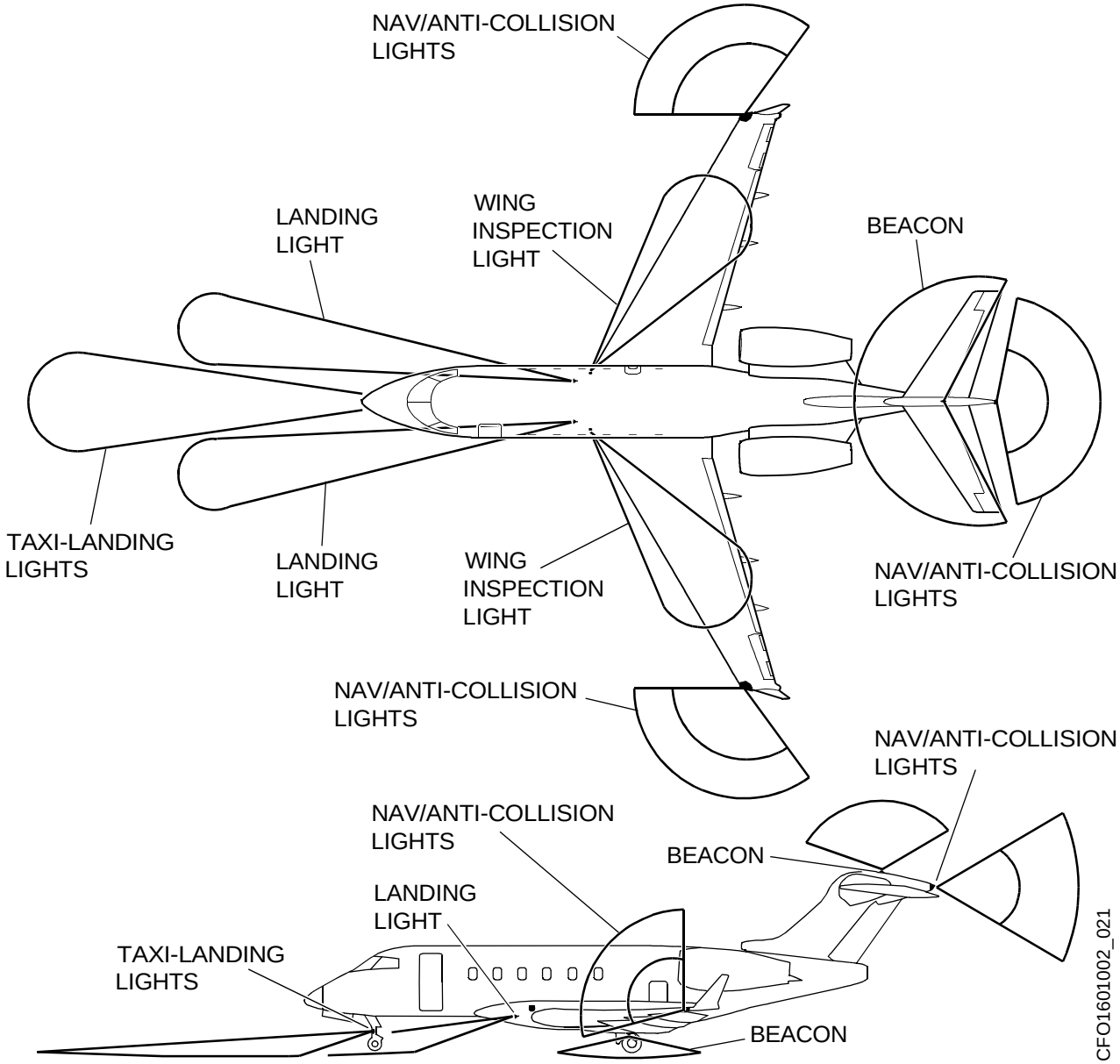

EICAS MESSAGES

Emergency lights and passenger messages are shown on the EICAS primary and status pages. A brief explanation of each message is provided.

MESSAGE	INHIBITS	MEANING	AURAL WARNING
EMER LIGHTS OFF		The cabin emergency lights are off when they should be armed	
EMER LIGHTS ON		The cabin emergency lights are on	

EICAS MESSAGES

Emergency lights and passenger messages are shown on the EICAS primary and status pages. A brief explanation of each message is provided.

MESSAGE	INHIBITS	MEANING	AURAL WARNING
EMER LIGHTS OFF		The cabin emergency lights are off when they should be armed	
EMER LIGHTS ON		The cabin emergency lights are on	

Table of Contents

Introduction 17-01-01
Radio Interface Unit (RIU) 17-01-01
VHF Navigation System 17-01-02
Description 17-01-02
Components and Operation 17-01-02
Integrated Navigation Receivers 17-01-02
Radio Tuning and Operation 17-01-03
Distance Measuring Equipment (DME) 17-01-06
Automatic Direction Finder (ADF) 17-01-06
Description 17-01-06
Mode S Transponder System 17-01-07
Description 17-01-07
Components and Operation 17-01-07
ATC Antennas 17-01-07
Transponder Modes 17-01-07
Traffic Alert and Collision Avoidance System(TCAS) 17-01-08
Description 17-01-08
Components and Operation 17-01-08
TCAS Mode Select 17-01-08
Control Operation 17-01-09
Resolution Advisory 17-01-10
Traffic Advisory 17-01-10
TCAS Voice Related Aural Alerts 17-01-11
PFD TCAS Indications 17-01-12
TCAS Resolution Advisories (RA) Inhibits 17-01-12
Terrain Awareness Warning System (TAWS) 17-01-13
Description 17-01-13
Components and Operation 17-01-13
MFD Control Panel (MCP) 17-01-14
Display Control Panel (DCP) 17-01-14
TAWS WARN Panel 17-01-14
TAWS Modes 17-01-15
Mode 1 17-01-16
Mode 2 17-01-17
Mode 3 17-01-19
Mode 4 17-01-20
Mode 5 17-01-23
Mode 6 17-01-24
Mode 7 17-01-26
Terrain Awareness Alerting 17-01-27
Terrain Clearance Floor (TCF) 17-01-29
Annunciations 17-01-30
Weather Radar 17-01-31
Description 17-01-31
Components and Operation 17-01-31
Weather Radar Operational Modes 17-01-31
Radar Antenna 17-01-32

Table of Contents (Cont)

Flight Management System (FMS) 17-01-33
Description 17-01-33
Components and Operation 17-01-34
Dead Reckoning (DR) 17-01-34
FMS Calculated VSPEEDS 17-01-34
GPS Control 17-01-34
Global Positioning System (GPS) 17-01-34
Predicted RAIM 17-01-35
Required Navigation Performance (RNP) 17-01-35
Satellite Deselect 17-01-35
Controls and Indications 17-01-36
Navigation Components 17-01-36
EICAS Messages 17-01-37

INTRODUCTION

The Radio Navigation System contains the radios and controls used for navigation purposes. Included in these systems are Terrain Awareness Warning System (TAWS), transponder, VHF navigation radios, weather radar, radio interface unit (RIU), displays and controls with FMS, Radio Communication, GPS, and TCAS.

Two separate systems are provided for radio navigation. They are designed and installed so that the failure of one system does not preclude the operation of the other system. Both are connected to the on-side and cross-side cockpit displays and controls.

Equipment, controls and wiring are designed and installed so that the operation of any of the system components will not adversely affect or will not be adversely affected by the simultaneous operation of any other radio or electronic unit or system.

The Challenger 300 is equipped with conventional navigation systems as follows:

- Integrated Navigation Receivers
- Distance Measuring Equipment
- Automatic Direction Finder

RADIO INTERFACE UNIT (RIU)

The left and right Radio Interface Units are located on their respective equipment racks forward of the entry door.The RIUs accommodate data concentration, communications and audio management, and control functions. The RIU provides an interface between the radios and the rest of the aircraft systems and equipment. They receive inputs from TAWS and TCAS and distribute digital audio signals from the audio control panels (ACPs).

VHF NAVIGATION SYSTEM

DESCRIPTION

The standard VHF navigation system includes dual VOR/localizer receivers, dual glideslope receivers, dual marker beacons, single distance measuring receiver (DME), and single automatic direction finder receiver (ADF). A second ADF and a second DME are available as options.

COMPONENTS AND OPERATION

INTEGRATED NAVIGATION RECEIVERS

The basic aircraft is equipped with a NAV-4000 receiver and a NAV-4500 receiver. Aircraft equipped with dual ADFs have two NAV-4000 receivers.

The NAV-4000 receiver is a remote mounted VOR/LOC receiver, glide slope receiver, marker beacon receiver, and ADF receiver in a single unit. The NAV-4500 contains all the features of the NAV-4000 except the ADF module.

Included in the NAV receiver module is the single-channel marker receiver, which operates at a fixed frequency of 75 MHz and has a HI/LO sensitivity control. This marker receiver provides audio and visual marker information for cockpit indications.

The ADF receiver operates in the frequency range of 190 to 1799 kHz and the maritime distress bands of 2088-2094 kHz and 2179-2185 kHz. It can operate as an AM radio receiver and automatic direction finder, with the capability of receiving keyed carrier stations via a beat frequency oscillator (BFO) signal.

VHF NAVIGATION RECEIVERS

Two VHF navigation receivers (NAV 1 and NAV 2) provide VHF omnirange (VOR), localizer (LOC), glideslope (GS) and marker beacon (MKR) signals to the navigation systems and flight crew.

System	Frequency Range	Channel Spacing
VOR	108.00 to 117.9 MHz	50 kHz (160 chan)
LOC	108.10 to 111.95 MHz	50 kHz (40 chan)
GS	329.15 to 335.00 MHz	150 kHz (40 chan)
MKR	75.00 MHz	Preset

Frequency selection is accomplished through the display control panel (DCP) or the control display unit (CDU).

MARKER BEACONS

Marker beacons indications are presented on the PFDs and audibly in the speakers and headsets if selected on during station passing. Two marker beacon antennas are installed on the bottom of the fuselage.

VHF NAVIGATION SYSTEM (Cont)

RADIO TUNING AND OPERATION

MFD TUNING

The multifunction display (MFD) and display control panel (DCP) provide single point control of both the onside and cross-side radios from the pilot's and copilot's position. The radio menu provides a summary of the radios as well as control for each. The RADIO button on the DCP shows the radio menu on the MFD. The MFD sends signals to the aircraft radios to tune frequencies, set operating modes adjusts squelch levels, and selects voice/data modes. The MFD also responds to tune/control commands from the cross-side MFD or the control display unit (CDU). Either acts as the master tuning control.

COM RADIO OPERATION

To tune the radio, execute the steps as follows:

1. Push the RADIO button on the DCP to show the radio menu if another menu/list is active.
2. Push the 1/2 button if necessary to alternately select the side 1 radio menu and the side 2 radios menu.
3. Turn the MENU knob on the DCP to move the selection box on the radio menu to the radio (COM, NAV, ATC/TCAS, etc.) frequency or channel that is to be tuned.
4. Turn the TUNE knob on the DCP to tune the desired frequency or channel.
5. Push the tune knob to acknowledge the new frequency/channel.
6. To change modes, adjust squelch, and other non-tuning functions of a radio:
   - -Turn the MENU knob to move the selection box to the appropriate radio.
   - -Push the RADIO button on the DCP to select the CONTROL menu of the radio.
   - -Turn the MENU knob to move the selection box on the CONTROL menu.
   - -Turn the DATA knob to change the mode or select an option, or push the PUSH SELECT button to step through available options
   - -Push the PUSH SELECT button to step through available options.
7. To exit the CONTROL menu, push the RADIO button. The display returns to the radio menu.

NAV RADIO OPERATION

The radio menu provides basic NAV radio tuning control. The NAV CONTROL menu controls the display for other NAV radio operation. Each NAV radio installed on the aircraft has its own NAV CONTROL menu. The active, recall, and DME frequency displays are identical to the display on the radio menu.

To set the NAV radio, execute the steps as follows:

1. Push the RADIO button on the DCP to show the radio menu on the MFD if another menu/list is active.
2. Turn the MENU knob on the DCP to move the selection box to the NAV radio (NAV1 or NAV2) display on the radio menu.
3. Push the RADIO button on the DCP to show the appropriate NAV CONTROL menu on the MFD.
4. The following operations are performed on the NAV CONTROL menu.
   - -Tune the DME frequency independently from the paired NAV radio frequency.
   - -When the DME hold is on, turn the MENU knob to move the selection box around the DME frequency.
   - -Turn the TUNE knobs to tune the desired DME frequency.

- Select the marker sense mode.
  - -Turn the MENU knob to move the selection box to the MKR SENSE control.
  - -Turn the DATA knob or push the PUSH SELECT button to select marker sense mode LO or HI.
- Select the NAV TEST mode.
  - -Turn the MENU knob to move the selection box to the TEST control.
  - -Turn the DATA knob or push the PUSH SELECT button to select the TEST mode.

VHF NAVIGATION SYSTEM (Cont)

TRANSPONDER/TCAS OPERATION

The radio menu provides basic transponder and TCAS control. The TRANSPONDER/TCAS CONTROL menu provides control display for other transponder and TCAS operations. The active beacon code, TCAS mode, and TCAS altitude limits selection that show on the left of the TRANSPONDER/TCAS CONTROL menu are identical to the TRANSPONDER/TCAS display on the radio menu. Two transponders are installed. The active transponder selection is used to select the desired transponder. When the active transponder is set to ATC 1, the pilot's side transponder is active. When the active transponder is set to ATC 2, the copilot's side transponder is active.

To tune the TRANSPONDER/NAV radio execute the following steps:

1. Push the RADIO button on the DCP to show the radio menu on the MFD if another menu/list is active.
2. Turn the MENU knob on the DCP to move the selection box to the TRANSPONDER/TCAS display on the radio menu.
3. Push the RADIO button on the DCP to show the TRANSPONDER/TCAS CONTROL menu on the MFD.
4. The following operations are performed on the TRANSPONDER/TCAS CONTROL menu:

- Select TCAS traffic altitude mode.
  - -Turn the MENU knob to move the selection box to the TRAFFIC control
  - -Turn the DATA knob or push the PUSH SELECT button to select traffic altitude mode REL (relative) or ABS (absolute)
- Select the active transponder.
  - -Turn the MENU knob to move the selection box to the transponder control
  - -Turn the DATA knob or push the PUSH SELECT button to select ATC 1 or ATC 2 as the active transponder
- Set the Flight ID
  - -Turn the MENU knob to move the selection box to the Flight ID control
  - -Turn the TUNE knobs to set the desired Flight ID characters
- Select the ATC/TCAS TEST mode.
  - -Turn the MENU knob to move the selection box to the TEST control
  - -Turn the DATA knob or push the PUSH SELECT button to select the TEST mode

ADF RADIO OPERATION

The radio menu provides basic ADF radio tuning. The ADF CONTROL menu provides control display for other ADF radio operations. Each ADF radio installed on the aircraft has its own ADF CONTROL menu. If only one ADF radio is installed, it shows on both the on-side and cross-side menus, and will be labeled ADF CONTROL with no numerical designator. The active frequency, recall frequency, and antenna mode that show on he left of the ADF CONTROL menu are identical to the ADF display on the radio menu.

To set the ADF modes execute the following steps:

1. Push the RADIO button on the DCP to show the radio menu on the MFD if another menu/list is active.
2. Turn the menu knob on the DCP to move the selection box to the ADF radio (ADF 1 or ADF 2) display on the radio menu.
3. Push the RADIO button on the DCP to show the ADF CONTROL menu on the MFD.
4. The following operations are performed on the ADF CONTOL menu:

- Select the ADF/ANT mode.
  - -Turn the MENU knob to move the selection box to the MODE control
  - -Turn the DATA knob or push the PUSH SELECT button to select ADF or ANT mode
- Select BFO mode.
  - -Turn the MENU knob to move the selection box to the BFO control
  - -Turn the DATA knob or push the PUSH SELECT button to select ON or OFF for the BFO mode
- Select ADF TEST mode.
  - -Turn the MENU knob to move the selection box to the TEST control
  - -Turn the DATA knob or push the PUSH SELECT button to select the TEST mode

VHF NAVIGATION SYSTEM (Cont)

TUNING REVERSION

Normally, the MFD provides the master tuning control. However, if the MFD fails or is reverted to a compressed PRF format, radio tuning through that MFD is no longer available. Tuning reversion allows the pilot to select either the MFD or the CDU as the master tuning control. When the TUNE knob on the Reversion Selection Panel is set to MFD ONLY or when the TUNE knob is set to CDU ONLY, the CDUs ignore tuning commands from the MFDs and the MFD radio menu is blanked. When the TUNE knob is in the COM 1 121.50 position, tuning is as normal (MFD is the master tuning control), but the COM 1 radio is forced to the emergency 121.50.

1. Turn the TUNE knob on the REVERSION panel to the desired position.
   - The MFD ONLY position selects the MFDs as the only tuning control
   - The CDU ONLY position selects the CDUs as the only tuning control
   - The COM 121.50 position forces the COM1 radio to 121.50, but remains the MFD as the master tuner

CDU TUNING

The CDU provides tuning control of both the on-side and cross-side radios. Data entry to the CDU is made through the scratchpad and the line select keys. Information is entered on the scratchpad, then transferred to the appropriate location with the adjacent line select key. Warning messages show if the information entered is not appropriate for the data field. Access to CDU tuning is via the TUNE page.

To tune the radio using the CDU execute the following steps:

1. Push the TUN key on the CDU to show the TUNE page.
2. To tune a radio directly, do one of the following steps:
   - Enter the frequency into the scratchpad, then push the line select key for the appropriate radio
   - Enter a preset channel number (1 through 20) into the scratchpad, then push the line select key for the appropriate radio
   - NAV radios only: Enter the three letter identifier for the NAVAID, then push the line select key for the appropriate radio (NAV 1 or NAV 2)
3. To show the CONTROL page for a particular radio (to set presets, select modes, etc.), push the line select key for the radio when the scratchpad is empty.
4. To return to the TUNE page from a CONTROL page, push the line select key for the radio or push the TUN key.

VHF NAVIGATION SYSTEM (Cont)

DISTANCE MEASURING EQUIPMENT (DME)

The DME-4000 is a remote mounted, three channel unit designed to provide position navigation information, including distance. In the single DME configuration, channel 1 can be tuned by the pilot, channel 2 by the copilot. Channel 3 is used by the FMS. In the optional dual DME configuration, each pilot has control over channel 1 of the onside DME, while channels 2 and 3 of each DME are used by the onside FMS.

The DME measures line-of-sight distance between the aircraft and selected DME ground stations, calculating the rate of closure and time to reach the selected station.

The DME information is displayed on the pilot's PFD and the backup reversionary navigation display. The DME operates in the frequency range of 962 to 1213 MHz. Most DME channel assignments are paired with VOR or ILS facilities and are selected by inputting the associated VOR or ILS frequency to the DME. The frequency selection is done with the CDU or the DCP in the frequency range of 108.00 to 117.95 MHz. DME frequencies not paired with VOR or ILS facilities are arbitrarily associated with a group of frequencies (133 to 135 MHz in the VHF communications band.

STATION IDENTIFICATION

If a station identifier signal is received, the resulting audio signal is supplied to the audio control unit for selection to the flight compartment speakers or the pilot's and copilot's headsets.

The distance indication is calculated by the DME transceiver and is sent for display to the pilot's and copilot's PFDs and CDUs through the IAPS computer. The distance display is shown in a four-digit field followed by NM. When a no-computed data condition occurs, the distance indication is replaced with dashes. The maximum DME tracking range is 300 NM. Actual range under particular conditions will vary with altitude, terrain features and other factors.

DME HOLD FUNCTION

The DME hold function splits the paired tuning between DME and VHF navigation systems to enable independent operation. The DME hold function holds the DME transceiver to the current VHF navigation frequency and permits the VHF navigation receiver to be independently tuned. When DME hold is on, which is indicated by the DME frequency suffixed with an "H" below the NAV radio frequency on the radio menu or NAV CONTROL menu, turn the MENU knob to move the selection box around the DME frequency. The DME hold function permits the VHF navigation receiver to be independently tuned while the VHF navigation receiver is kept at the current frequency.

This function is selected when the DME H push button on the DCP is pressed. The paired VHF navigation frequency display is activated. If the DME H push button is pressed again, the DME hold function is canceled. The paired VHF navigation frequency display is also removed.

AUTOMATIC DIRECTION FINDER (ADF)

DESCRIPTION

The Automatic Direction Finder (ADF) System is a dual low-frequency radio system. The ADF system is used to indicate the bearing to a selected ground station. The ADF system supplies station identification and voice signals to the audio integrating system. The transmitting stations can be non directional beacons (NDBs) or standard broadcasting stations in the frequency range of 190 to 1799 kHz and maritime distress bands of 2088 to 2094 kHz. The bearing-to-station data is shown on the pilot and copilots' PFDs, and backup reversionary navigation display.

The unit receives unmodulated-voice / tone-modulated carrier or keyed carrier transmissions from Non-Directional Beacons or AM stations, then calculates the station bearing, relative to the nose of the aircraft, as an output.

Using the beat frequency oscillator (BFO) function, the receiver produces a bearing to the station and also produces a 1020 Hz output tone when a carrier is present, in addition to the residual audio/noise from the detected carrier. A data-load option may be included so that the BFO audio output will be "clean", i.e., contain no noise, even under low signal strength conditions.

MODE S TRANSPONDER SYSTEM

DESCRIPTION

The Mode S transponder system consists of two Mode S transponder units. Only one transponder unit is active at any one time, while the other has a standby role. The transponder system supplies ATC, or a traffic alert and collision avoidance system (TCAS) equipped aircraft with aircraft identification and altitude data in response to an interrogation. The transponder used with TCAS is equipped with two paired antennas to transmit and receive interrogations above and below the aircraft without the signal being masked by the airframe.

The transponder will go into ident mode for approximately 18 seconds when the ID function key is pushed and the annunciator illuminates.

COMPONENTS AND OPERATION

ATC ANTENNAS

Each transponder system has two paired antennas. Each system has an upper and lower antenna located on the forward fuselage.

TRANSPONDER MODES

ATC/TCAS mode selection is as follows:

- STBY
- TA/RA
- TA ONLY
- ALT ON
- ALT OFF

Selecting STBY on either MFD causes the TCAS to go to standby mode. At system power up on the ground, the system powers up in standby mode.

TA/RA is the normal TCAS mode. When TA/RA mode is set, the TCAS computer generates intruder traffic symbology and resolution advisory vertical speed fly to commands. The intruder traffic symbology shows on the PFD and/or MFD when selected. RA vertical speed fly to commands show on the PFD vertical speed scale when commanded by the TCAS.

RAs are not displayed when TA ONLY is the active mode. This annunciation is displayed in cyan when TA ONLY mode is selected. This annunciation turns yellow and flashes when a TA is present.

ALT ON mode is used when ATC transponder mode C operation is desired, but TCAS operation is not. The TCAS computer does not show traffic on the displays, does not issue resolution advisories, and the ATC transponder does not reply to other aircraft TCAS interrogations. Mode C is not reported when interrogated by ATC.

ALT OFF mode is used when TCAS and ATC transponder operation is not desired. The TCAS computer does not show traffic on the displays, does not issue resolution advisories, and the ATC transponder does not reply to other aircraft TCAS interrogations. Also, mode C is not reported when interrogated by ATC.

TRAFFIC ALERT AND COLLISION AVOIDANCE SYSTEM (TCAS)

DESCRIPTION

The TCAS II system is an airborne traffic alert and collision avoidance system that interrogates transponders in nearby aircraft and uses computer processing to identify and display potential and predicted collision threats. The system protects a volume of airspace around the TCAS equipped aircraft. The system provides appropriate aural and visual advisories to the flight crew to provide adequate separation when the computer analysis of intruding aircraft transponder replies predicts a penetration of the protected airspace. The TCAS II system provides two types of advisories. A traffic advisory (TA) indicates the relative position of an intruding aircraft that is approximately 35 seconds from the closest point of approach and may, a short time later require a resolution advisory (RA). The TA provides the flight crew with the opportunity to visually acquire the intruding aircraft. An RA will produce a threat resolution in the form of a vertical maneuver that will increase separation when the computer predicts the intruder aircraft is within approximately 25 seconds from the closest point of approach.

The TCAS II system can only generate resolution advisories for intruders equipped with operative Mode C or better transponders, which provide information on the altitude of the intruder. Traffic advisories, which display the relative position of the intruder, can be generated for aircraft with operative transponders. The TCAS II equipment is viewed as a supplement to the pilot, who, with the aid of the ATC system has the primary responsibility for avoiding mid-air collisions. The TCAS II system provides no indication of traffic conflicts with the other aircraft without operative transponders.

COMPONENTS AND OPERATION

The TCAS II system provides the following capabilities:

- Collision avoidance tracking
- Threat detection
- Threat resolution
- Communication and coordination
- Surveillance

TA and RA symbols have priority over any conflicting display space usage and will overwrite any other symbols or characters. The TCAS II has a maximum range of 40 nm and a maximum of 32 intruders can be displayed. Four different TCAS symbols are used on the TCAS page to represent TCAS targets. Indicators that represent the intruder’s vertical speed and relative altitude data accompany each TCAS symbol.

Relative altitude mode is used when the altitude between own aircraft and intruder aircraft is desired. Absolute altitude mode is used when the barometric altitude of the intruder aircraft is desired. The relative (REL) or absolute (ABS) altitude of intruder aircraft is shown below the traffic symbols on the TCAS display. Relative altitude mode is the default mode. Altitude is not shown for intruder aircraft not reporting altitude data. To select REL or ABS, turn the MENU switch to position the selection box around the desired mode.

Arrows are used to indicate the vertical speed of the target aircraft. The arrow indicates that an aircraft is changing altitude at a rate of 500 fpm or greater.

Plus or minus signs along with a number symbolizes the relative altitude of the threat airplane. Plus indicates above and minus indicates below.

TCAS MODE SELECT

Line select buttons on the left and right sides of the TCAS CONTROL page control the following functions:

- MODE (TA, TA/RA, or STBY)
- TRAFFIC (ON/OFF)
- ALT TAG (REL/ABS)
- TEST
- EXT TEST (ON/OFF)
- ALT LIMITS (ABOVE, NORM, BELOW)

TRAFFIC ALERT AND COLLISION AVOIDANCE SYSTEM (TCAS) (Cont)

CONTROL OPERATION

TCAS modes selection and other controls are done using the FMS CDU, MFD radio menus and the DCP.

The radio menu provides basic transponder and TCAS control. The TRANSPONDER/TCAS menu provides control display for other transponder and TCAS operations. The active beacon code, TCAS mode, and TCAS altitude limits selection that show on the left of the TRANSPONDER/TCAS menu are identical to the TRANSPONDER/TCAS display on the radio menu.

MFD controls using the DCP:

1. If the selection box is not displayed on the MFD radio menu, push the RADIO push button on the DCP
2. Turn the MENU knob on the DCP to position the selection box around the desired radio tune frequency/channel/mode display.

When using the active tune method the frequency color changes from green to white. Active tuning is used for transponder beacon code selection. Usually radio control other than frequency/channel tuning is done on the radio's sub menu. Radio control uses the selection box method as follows:

1. Repeat steps 1 and 2 above to position the selection box within the display for the desired radio on the MFD radio menu.
2. Push the RADIO push button and the sub menu for the selected radio will replace the top level menu. (The process of tuning on the MFD radio sub menu is identical to tuning on the MFD radio menu).
3. Turn the MENU knob to position the selection box around the desired radios control.
4. Turn/push the DATA knob on the DCP to select the desired state of the selected control

The selection box returns to its MFD main radio menu home position after 20 seconds of no activity on the sub menu or by again pushing the RADIO (on the DCP) push button again. Pushing a menu push button will replace the sub menu with the top level menu and operate as required for the push button. The selection box is immediately positioned around the tune frequency/channel display on the sub menu and frequency/channel is tuned if the TUNE knob is turned, or the ↕ knob is pushed.

The beacon code entry uses active tuning control operation and any code may be entered between 0000 and 7777. The IDENT switch is located on both control wheels and stays active for approximately 18 seconds when pushed.

The TRANSPONDER/TCAS mode selection and annunciation is on the TRANSPONDER/TCAS radio primary display page on the MFD and on the TRANSPONDER/TCAS control radio submenu. Selections are as follows:

- When using the DATA button the possible mode selections in order of succession are STBY, TA/RA, TA ONLY, ALT ON, ALT OFF. The order reverses if the DATA knob is turned counterclockwise
- When STBY, ALT ON or ALT OFF are selected, a 2 second delay is imposed before transmitting that mode selection to the TCAS. When STBY is selected, a 2 second delay is imposed before transmitting to ATC. The standby command delay prevents transient selection of standby during mode selection
- The transponder reports altitude in TA/RA, TA ONLY and ALT ON modes.
- The TRANSPONDER/TCAS mode selection on the MFD display is replaced with XPDR FAIL if the transponder is failed and the mode is not in STBY
- When ALT OFF is selected, a 2 second delay is imposed before transmitting the mode selection to prevent transient selection during mode selection

The altitude limits selection and annunciation is on the TRANSPONDER/TCAS radio primary display and TRANSPONDER/TCAS radio sub menu. The selections are as follows:

- When using the DATA button the possible selections are ABV, NORM, BLW, and ABV/BLW. The order reverses if the DATA knob is turned counterclockwise
- ABV selects the above altitude limit, BLW selects the below altitude limit. When both are selected, the unrestricted altitude mode is invoked. When NORM is selected, ABV and BLW are deselected
- The altitude limits selection is inoperative if XPDR FAIL is annunciated
- Relative (REL) or absolute (ABS) on the TRANSPONDER/TCAS sub menu is enlarged when selected
- An open diamond symbol represents non-threat traffic that is displayed below the TRAFFIC legend. When OFF is selected, non threat traffic is not displayed. When ON is selected all traffic is displayed
- Transponder selection is on TRANSPONDER/TCAS radio sub menu. When ATC1 or ATC2 is the active transponder, the selected transponder is enlarged

TRAFFIC ALERT AND COLLISION AVOIDANCE SYSTEM (TCAS) (Cont)

- Pressing the TEST button will start a self-test program that will verify proper operation of the TA and RA displays and of the aural advisories. The TEST mode does not affect normal TCAS operation. Should an actual TA or RA occur during TEST sequence, the test is automatically terminated and the advisory is announced and displayed

THREAT LEVELS AND DATA TAGS

The system provides four types of advisories:

- Traffic Advisories (solid amber circle) - Traffic advisories (TA) symbols appear on the MFD, when target(s) is projected to converge with the TCAS equipped airplane in approximately 35 seconds, with the closest point of the approach being inside a minimum vertical separation envelope. Traffic advisories are generated for aircraft with operative Mode S, Mode C, or Mode A transponders. The relative bearing and range of the intruder are displayed

- Resolution Advisory (solid red square) - Resolution advisories (RA) symbols appear on the MFD, when target(s) is predicted to penetrate the protected vertical envelope in approximately 25 seconds. An RA display on the PFD vertical speed indicator (VSI) indicates the vertical rate that must be achieved to maintain safe separation. During an RA, red and green bands overlay the VSI scale. Red band indicates what vertical speed range should be avoided and the green band indicates the vertical speed needed to achieve safe separation. The red band indicates pitch rates that should be avoided and fly the vertical speeds within the green band. RA display can only be issued if an intruder airplane is equipped with a Mode S transponder

- Proximity Traffic (solid cyan color diamond) - Proximity traffic (PROX) symbols appear on the MFD when non-threat airplane(s), which have a flight path that approaches the collision area. The PT symbol is displayed if the target does not qualify for a TA but is currently within ± 6 nm and ± 1200 feet of the TCAS airplane

- Other Traffic (open cyan color diamond) - The other traffic (OT) is in the surveillance area, but is not a collision threat

When altitude data is available, an ALT TAG shows the altitude of each intruder aircraft on the TCAS traffic display. When the altitude of the intruder aircraft is more than that of the interrogation aircraft, ALT TAG shows above the traffic symbol. When the altitude of the intruder aircraft is less than that of the interrogation aircraft, ALT TAG shows below the traffic symbol. If the intruder aircraft altitude changes at a rate of ± 500 ft./min. or more, an arrow after the traffic symbol shows the altitude change direction.

The TCAS system provides no indication of traffic conflicts if the intruder airplane is without an operative transponder.

The TUNE and TCAS CONTROL pages on the CDU are another way to control TCAS mode selection.

RESOLUTION ADVISORY

Resolution advisories (RA) advise the pilot that corrective action is required to avoid an intruder. RAs show on the vertical speed scale to indicate forbidden/acceptable vertical speeds. TCAS overlays are available on both the PFD and MFD. A TCAS only map is available on the MFD. Identical TCAS control selections show on both onside and cross-side MFDs so that either pilot can make TCAS control selections. Also aural alerts will sound over the cockpit audio system.

TRAFFIC ADVISORY

A traffic advisory (TA) is issued when an intruding aircraft penetrating the 35 second TCAS surveillance area and is considered by the TCAS computer to be a possible threat. The traffic advisory provides the flight crew with an opportunity to use the TCAS page on the MFD to assist in visually locating the intruding aircraft.

The following advisories are shown on the PFD and MFD and heard on the speakers:

- Aural advisory TRAFFIC TRAFFIC is sounded
- Amber CAS TRAFFIC is displayed below the VSI scale on the PFD
- Amber TAs are shown on the TCAS page of the MFD as a solid amber circle

TRAFFIC ALERT AND COLLISION AVOIDANCE SYSTEM (TCAS) (Cont)

TCAS VOICE RELATED AURAL ALERTS

VOICE MESSAGE	MEANING
Climb, Climb	Climb at a nominal 1500 fpm
Climb, Crossing Climb	Same as Climb, Climb, aircraft's flight path will cross the flight path of the intruder
Increase Climb	Follows a climb advisory. Climb rate should be increased to the rate on the VSI (nominally 2500 fpm)
Adjust Vertical Speed, Adjust	Reduce vertical speed to speed shown on vertical speed indicator
Descend, Descend NOW	Follows a climb advisory. TCAS indicates that a reversal of vertical speed is needed to provide adequate separation.
Descend Descend	Descend to nominal 1500 fpm
Descend, Crossing, Descend	Same as Descend, Descend, aircraft's flight path will cross the flight path of the intruder
Increase Descent	Follows a descent advisory. Descent rate should be increased to the rate on the VSI (nominally 2500 fpm).
Reduce Descent	Reduce vertical speed to speed shown on vertical speed indicator
Climb, Climb NOW	Follows a descent advisory. TCAS indicates that a reversal of vertical speed is needed to provide adequate separation.
Monitor Vertical Speed	Follow the vertical speed indicator. The present vertical speed of the aircraft is not within the area indicated by the VSI
Clear Of Conflict	Reposition to assigned altitude
Maintain Vertical Speed, Maintain	Maintain climb or descent rate
Maintain Vertical Speed, Crossing Maintain	Maintain climb rate
Traffic, Traffic	Traffic Advisory

TRAFFIC ALERT AND COLLISION AVOIDANCE SYSTEM (TCAS) (Cont)

PFD TCAS INDICATIONS

Resolution Advisories are presented on the PFD.

The word TRAFFIC appears below the altitude strip display on the PFD in the colors indicated below:

- Red TRAFFIC appears for a Resolution Advisory (RA)
- Amber TRAFFIC appears for a Traffic Advisory (TA)
- White TCAS TEST appears when the system is tested
- White TA ONLY appears when RA is inhibited
- White TCAS OFF appears when the system is off

The failure messages appear on the VSI and MFD. They are:

- TCAS RA FAIL
- TCAS FAIL

TCAS RESOLUTION ADVISORIES (RA) INHIBITS

TCAS Resolution Advisories (RA) and some aural alerts are inhibited below certain radio altitudes. Radio altitudes and the associated RA status are as follows:

RADIO ALTITUDE	RESOLUTION ADVISORY (RA) STATUS
Below 900 ft AGL, descending Below 1100 ft climbing	All RA's inhibited. (TA ONLY) and TA Aural message inhibited
Below 1000 ft AGL descending Below 1200 ft climbing	"DESCEND RA" inhibited
Below 1450 ft AGL	"INCREASE DESCENT" inhibited

TERRAIN AWARENESS WARNING SYSTEM (TAWS)

DESCRIPTION

The primary purpose of the terrain awareness warning system (TAWS) is to provide alerts and warnings to avoid controlled flight into terrain (CFIT) and to provide detected windshear warning. The system provides the flight crew with aural alert messages and visual annunciations and displays in the event that the boundaries of any alerting envelopes are exceeded.

The TAWS contains three systems in one line replaceable unit.

- Ground proximity
- Terrain/obstacle awareness
- Windshear systems

The Ground Proximity Warning System (GPWS) produces warnings that require action based on real time input to the GPWS. These warnings help prevent CFIT and are categorized into 5 modes. Each mode has a distinct aural and visual alerts. The GPWS is also capable of providing a sixth mode, which can include altitude related callouts and excessive bank angle callout. The displays provide the PULL UP and GND PROX GPWS annunciations on the PFD.

Mode 7 provides windshear caution or warning alerts if threshold values along the flight path and perpendicular to the flight path are exceeded. The displays provide WINDSHEAR annunciations of the PFD.

The Enhanced Ground Proximity Warning Computer (EGPWC) processes all inputs and provides all aural and visual alerts and warnings.

A warning annunciation indicates a prediction of impact with terrain. All annunciations are displayed on pilot and copilot PFDs.

COMPONENTS AND OPERATION

The MFD control panel provides for the selection of the terrain (TR/WX) display on the respective MFD, while the DCP is used to display TR/WX on the PFD. Graphical terrain data is automatically displayed on the MFD when a terrain hazard is encountered. Each time the TAWS computer commands a terrain popup, the MFD automatically commands terrain overlay to be added to the current format if the onside PFD is not displaying terrain and if the MFD format is compatible with terrain. The PFD commands the normal range to 10 NM. If the current MFD format is incompatible with terrain, the format will be changed to PPOS with TR selected, with a 10nm range. Regardless of the current format, selecting TR/WX will automatically select terrain for display. Similarly, selection of WX or WX/LX automatically deselects terrain.

Terrain range is selectable from the on-side DCP RANGE knob. with selected ranges up to 300 nm. If the display range is at a value greater than 300 nm when the pilot selects terrain, the display range will automatically reduce to 300 nm. On the Challenger 300, range can be selected up to 600 nm when in plan map format. If terrain data has been selected for display, selection of display ranges greater than 300 nm will be inhibited.

The TAWS WARN control panel, located on the center instrument panel, provides for the inhibiting of GS, FLAPS, aural warnings and TERRAIN.

- GS
  - A TAWS GS WARN OFF status message is displayed when the switch is set to OFF. This switch is used by the pilot to mute nuisance “glideslope” warnings. This switch is normally selected when a backcourse approach is conducted
- FLAPS
  - A TAWS FLAPS OFF status message is displayed when the switch is set to OFF. This switch is used by the pilot to mute related GPWS warnings when a landing will be attempted with flaps not at 30 degrees
- TERRAIN
  - A TAWS TERR OFF status message is displayed when the switch is set to OFF. This switch is used by the pilot to deselect the terrain function of the TAWS

TERRAIN AWARENESS WARNING SYSTEM (TAWS) (Cont)

MFD CONTROL PANEL (MCP)

Illustration of the MFD is shown with the optional 3D Map Display switches (refer to Chapter 11-1-24 for further description).

CFO1101002_009

DISPLAY CONTROL PANEL (DCP)

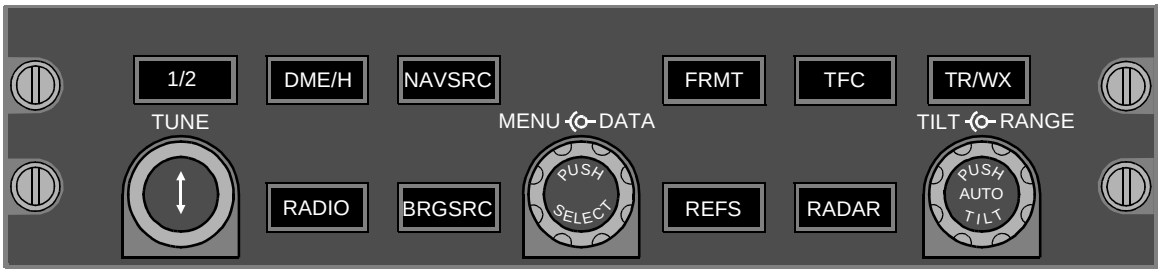

CFO1101002_007

TAWS WARN PANEL

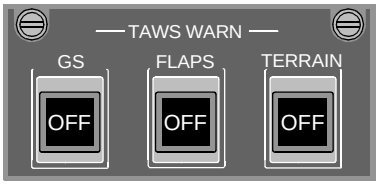

CFO1701002_005

TERRAIN AWARENESS WARNING SYSTEM (TAWS) (Cont)

TAWS MODES

TAWS modes are as follows:

MODE 1

EXCESSIVE DESCENT RATE
"SINKRATE"
"PULL UP!"

MODE 2

EXCESSIVE TERRAIN CLOSURE RATE
"TERRAIN..TERRAIN"
"PULL UP!"

MODE 3

SINK AFTER TAKEOFF
"DON'T SINK!"

MODE 4

TOO CLOSE TO TERRAIN
"TOO LOW-TERRAIN"
"TOO LOW-GEAR"
"TOO LOW-FLAPS"

MODE 5

EXCESSIVE DEVIATION BELOW GLIDESLOPE
"GLIDESLOPE"

MODE 6

EXCESSIVE BANK ANGLE
"BANK ANGLE!"

ALTITUDE CALL-OUTS
"...FIVE HUNDRED..."

MODE 7

WINDSHEAR CAUTION/WARNING
"WINDSHEAR, WINDSHEAR"
"WINDSHEAR"

CFO1701002_008

TERRAIN AWARENESS WARNING SYSTEM (TAWS) (Cont)

MODE 1— Excessive Descent Rate

Mode 1 alerts when the aircraft descends close to the terrain. The mode is active when the airplane is less than 2500 ft. AGL. Mode 1 requires radio altitude and rate-of-descent data.

The annunciation envelope consists of two areas, alert and warning.

- Penetration of the alert area annunciates a GND PROX amber CAS alert on the PFD and generates an aural “SINKRATE, SINKRATE”. The aural alert will be annunciated once and will be repeated only if condition degrades by more than 20% based on computed time to impact. The visual alert will remain until the condition is rectified.
- Penetration of the warning area will annunciate a PULL UP red CAS alert on the PFD and generate an aural “PULL UP” warning. The aural warning is annunciated continuously until the condition is rectified.

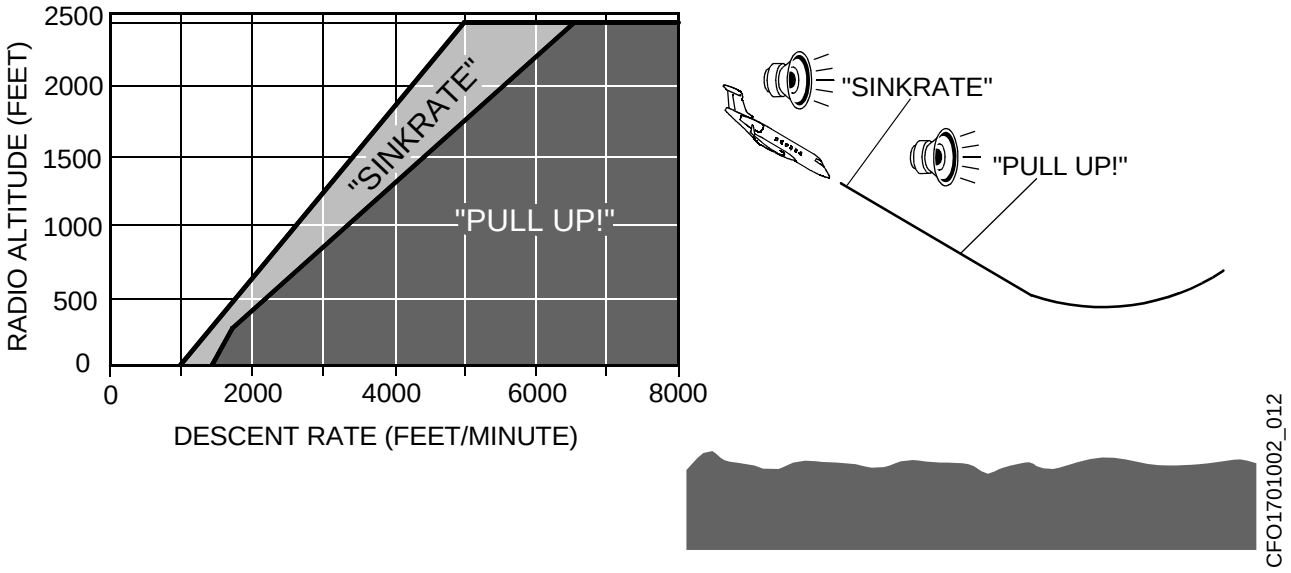

TERRAIN AWARENESS WARNING SYSTEM (TAWS) (Cont)

MODE 2 — Excessive Terrain Closure Rate

Mode 2 provides alerts and warnings when the TAWS detects that the closure rate between the airplane and the terrain is excessive. The airplane need not be in descent; rising terrain may be encountered in level flight or the terrain may be rising at a rate greater than the airplane rate of climb. Mode 2 uses radio altitude and vertical speed inputs.

Mode 2 has two sub-modes, Mode 2A and Mode 2B.

MODE 2A

Mode 2A is activated when flaps are not in the landing position. Penetration of the alert area will annunciate a GND PROX amber CAS on the PFD and generate an aural “TERRAIN, TERRAIN.” The aural is annunciated once and the visual alert will remain until the condition is rectified. Penetration of the warning area will annunciate a PULL UP warning CAS alert on the PFD and generate an aural “PULL UP” warning. The aural and visual warning are annunciated continuously until the condition is rectified.

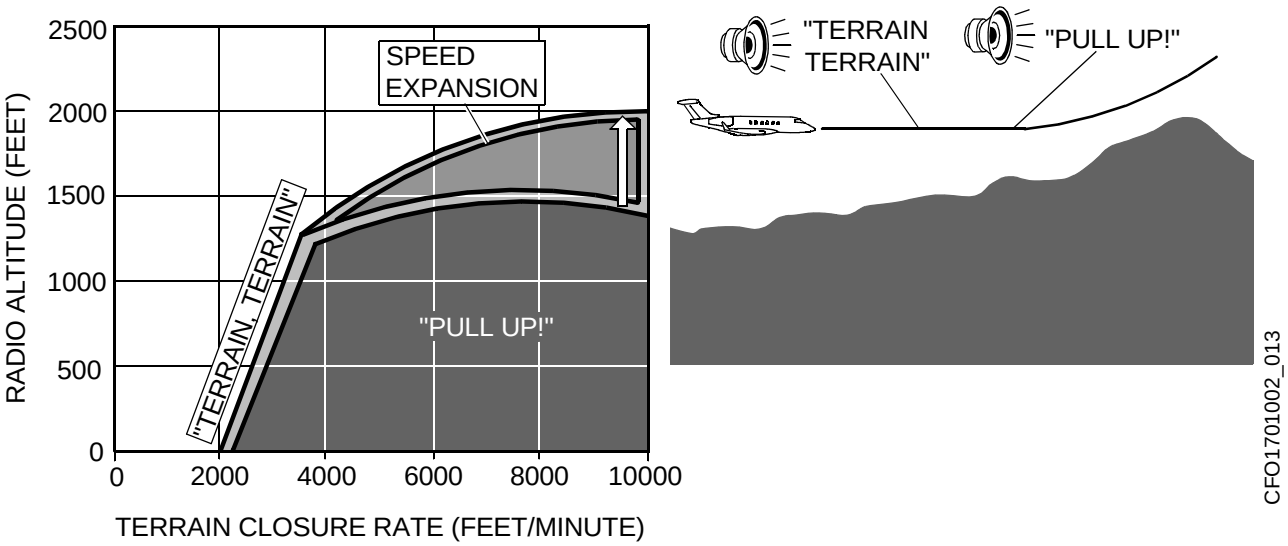

TERRAIN AWARENESS WARNING SYSTEM (TAWS) (Cont)

MODE 2 — Excessive Terrain Closure Rate (Cont)

MODE 2B

Mode 2B is activated when flaps are in the landing configuration, or if the flaps are up and the airplane is on an ILS approach and the glideslope and localizer deviations are less than ± 2 dots and for 60 seconds after take-off. Penetration of the alert area will annunciate an amber GND PROX on the attitude display of the PFD and enable an aural “TERRAIN, TERRAIN”. The aural and the visual alerts are annunciated continuously and will remain until the condition is rectified. Penetration of the warning area will annunciate a red PULL UP on the attitude display of the PFD and generate an aural “PULL UP” warning. The aural and visual warning are annunciated continuously until the condition is rectified. The Mode 2B warning envelope is inhibited at an altitude below 30 feet AGL.

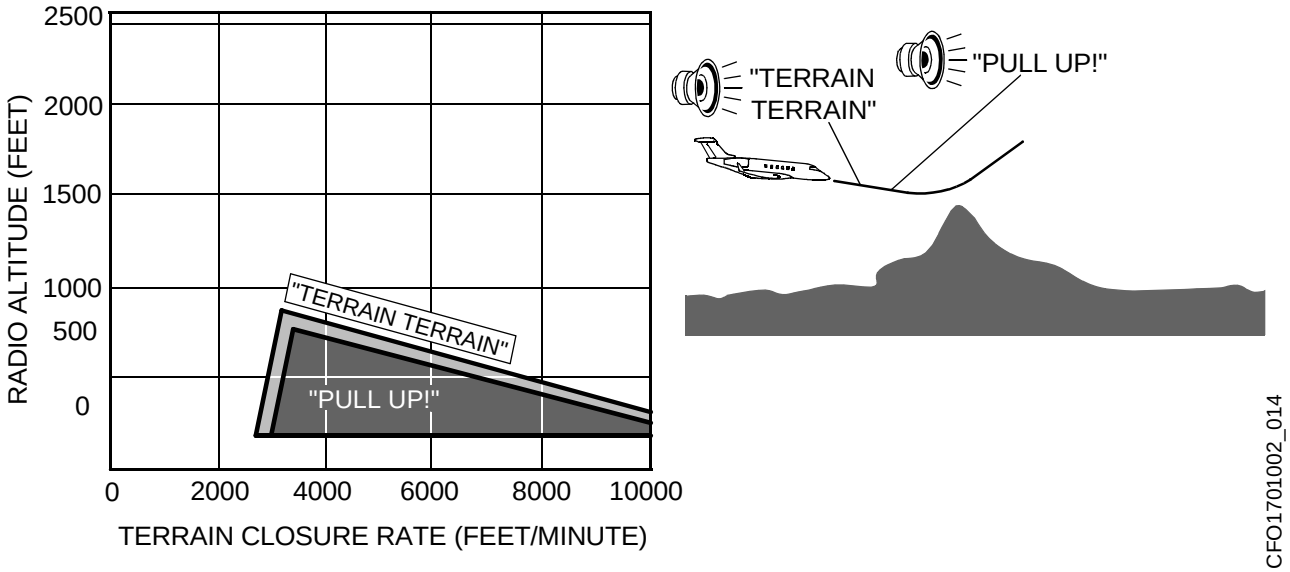

TERRAIN AWARENESS WARNING SYSTEM (TAWS) (Cont)

MODE 3 — Altitude Loss After Takeoff

Mode 3 provides warnings when the TAWS detects that a significant amount of altitude is lost immediately after takeoff or during go-around. Mode 3 uses radio altitude, barometric altitude and altitude rate.

Mode 3 is enabled after takeoff or go around, when landing gear or flaps are not in landing configuration. Mode 3 stays enabled until the TAWS detects that the aircraft has gained sufficient altitude that it is no longer in the takeoff phase of flight.

If a descent is initiated following takeoff or go-around, the TAWS stores the altitude value at which the descent began and compares successive altitude data to the stored value. Activation of the warning is induced when the minimum terrain clearance, as a function of altitude lost, is exceeded.

Penetration of the alert area will annunciate a GND PROX alert on the attitude display of the PFD and generate an aural “DONT SINK, DONT SINK” warning. The aural warning is annunciated only once, unless the altitude value degrades by more than 20% from the initially stored value and again at each additional 20% degradation from the initially stored value. This condition will remain until the airplane regains the initial altitude value. Mode 3 is inhibited for radio altitude values in excess of 1500 feet.

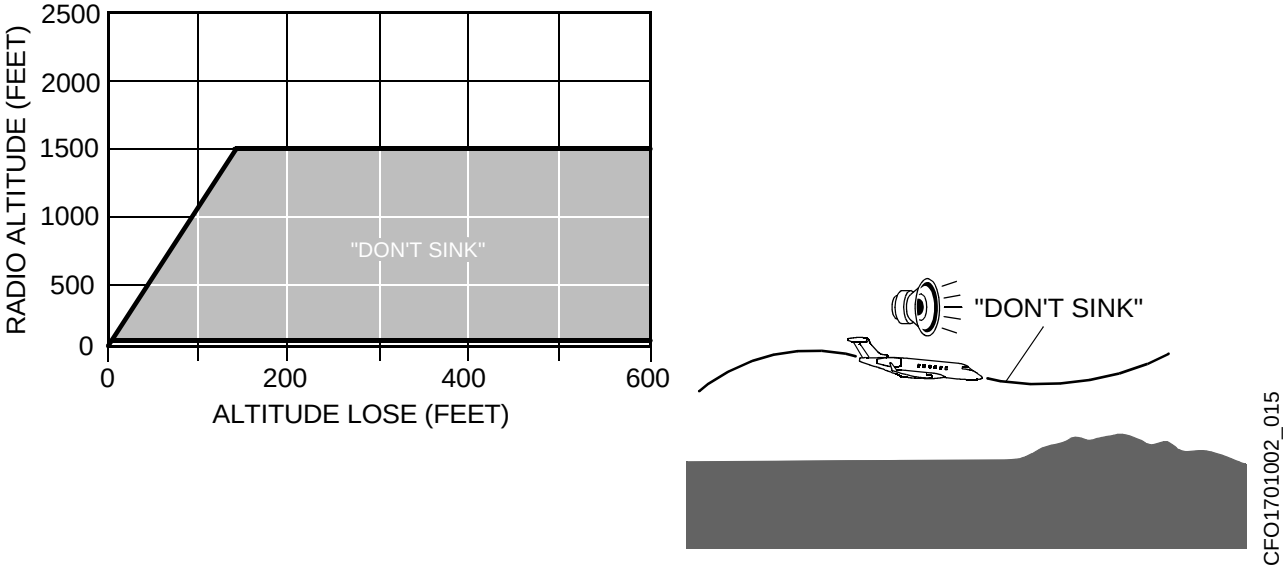

TERRAIN AWARENESS WARNING SYSTEM (TAWS) (Cont)

MODE 4 — Unsafe Terrain Clearance

Mode 4 provides alerts and warnings for sufficient terrain clearance based on the airplanes phase of flight and speed. Mode 4 requires radio altitude, computed airspeed, gear position and flap position inputs. The alert and warning envelopes are based on minimum allowable terrain clearance as a function of computed airspeed.

Mode 4 is divided into 3 sub-modes: Mode 4A, Mode 4B, and Mode 4C.

MODE 4A

Mode 4A is active when the airplane is in cruise or approach phase of flight and the landing gear is not in the landing position. The alert envelope for Mode 4A begins at 30 feet AGL and extends vertically to an altitude of 500 feet AGL. During penetration of the alert area above 190 knots, the upper boundary increases with airspeed to a maximum of 1000 feet radio altitude at 250 knots or more. This annunciates an amber GND PROX display and generates a continuous aural “TOO LOW TERRAIN” warning. Penetration of the alert area 190 kt, annunciates an amber GND PROX alert on the PFD and generates an aural “TOO LOW GEAR” warning. The aural and visual remains until the airplane exits the envelope.

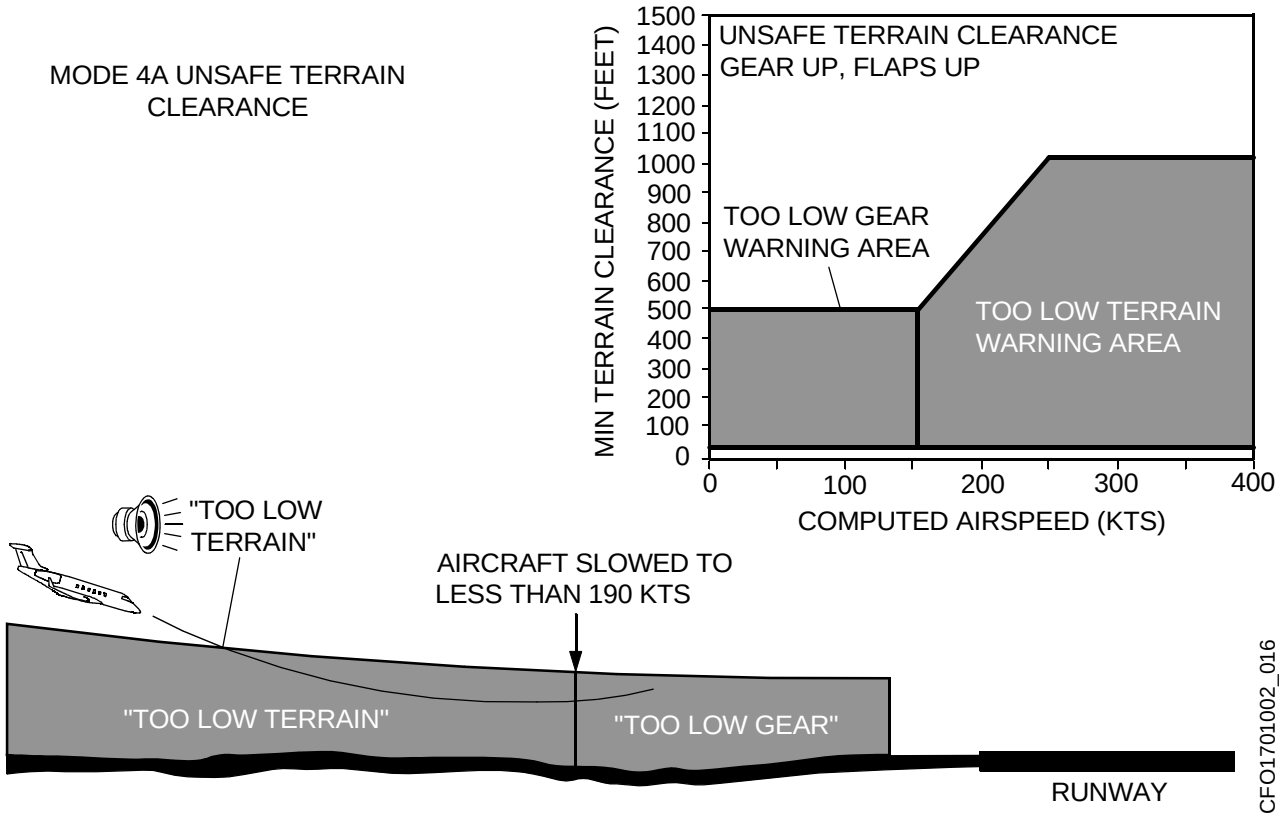

TERRAIN AWARENESS WARNING SYSTEM (TAWS) (Cont)

MODE 4 — Unsafe Terrain Clearance (Cont)

MODE 4B

Mode 4B is active when the airplane is in cruise or approach phase of flight and the landing gear is in the DN position. The alert envelope for Mode 4B begins at 30 feet AGL and extends vertically to an altitude of 245 feet AGL. Penetration of the alert area, above 159 knots, will annunciate an amber GND PROX display on the PFD and generate a continuous aural “TOO LOW TERRAIN” warning. The aural and visual remain until the airplane exits the envelope. Penetration of the alert area, below 159 knots, annunciates an amber GND PROX display on the PFD and generates an aural “TOO LOW FLAPS” warning.

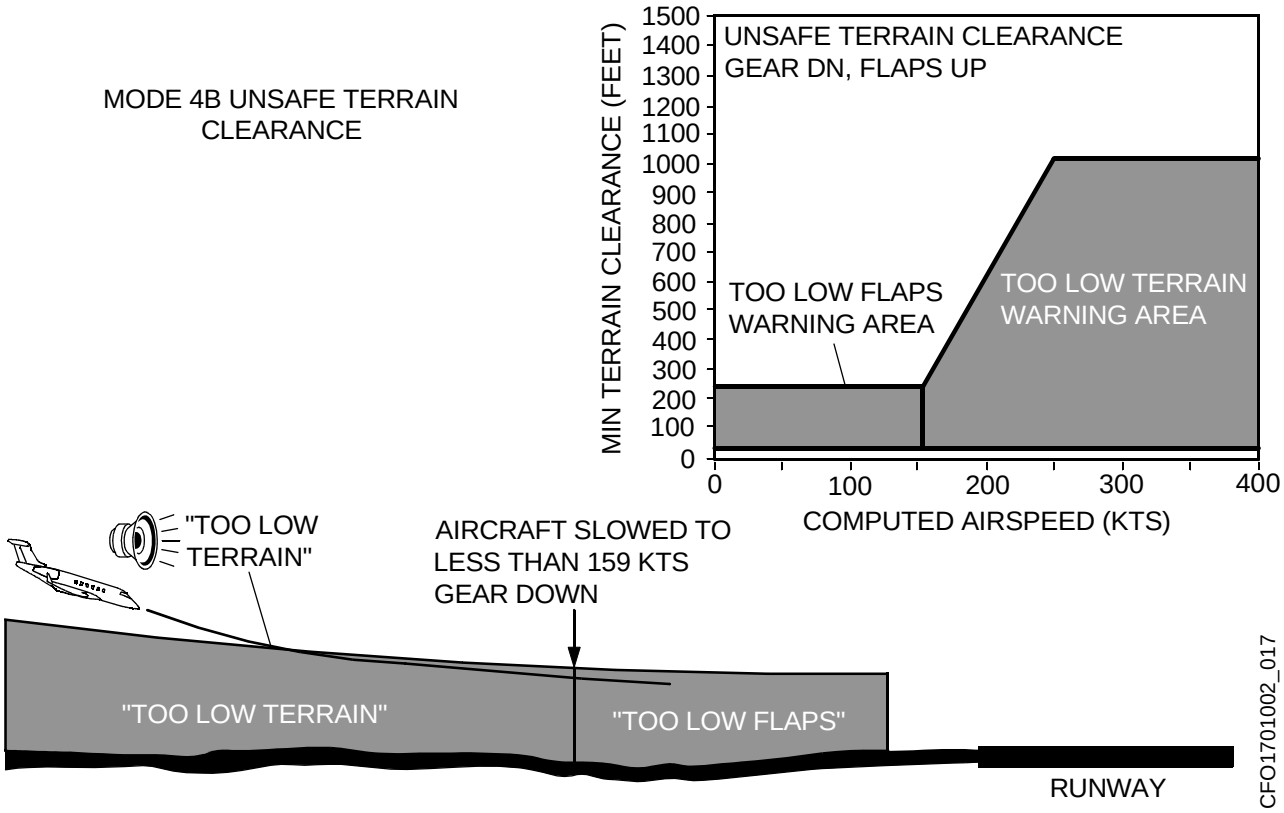

NOTE: Aural “TOO LOW FLAPS” warning can be silenced by selecting OFF on the FLAPS switch, which is located on the TAWS WARN panel.

TERRAIN AWARENESS WARNING SYSTEM (TAWS) (Cont)

MODE 4 — Unsafe Terrain Clearance (Cont)

MODE 4C

Mode 4C is based on a minimum terrain clearance, or floor, that increases with radio altitude during takeoff. Any decrease in altitude below minimum terrain clearance will annunciate an amber GND PROX display on the PFD and generate an aural “TOO LOW TERRAIN” warning.

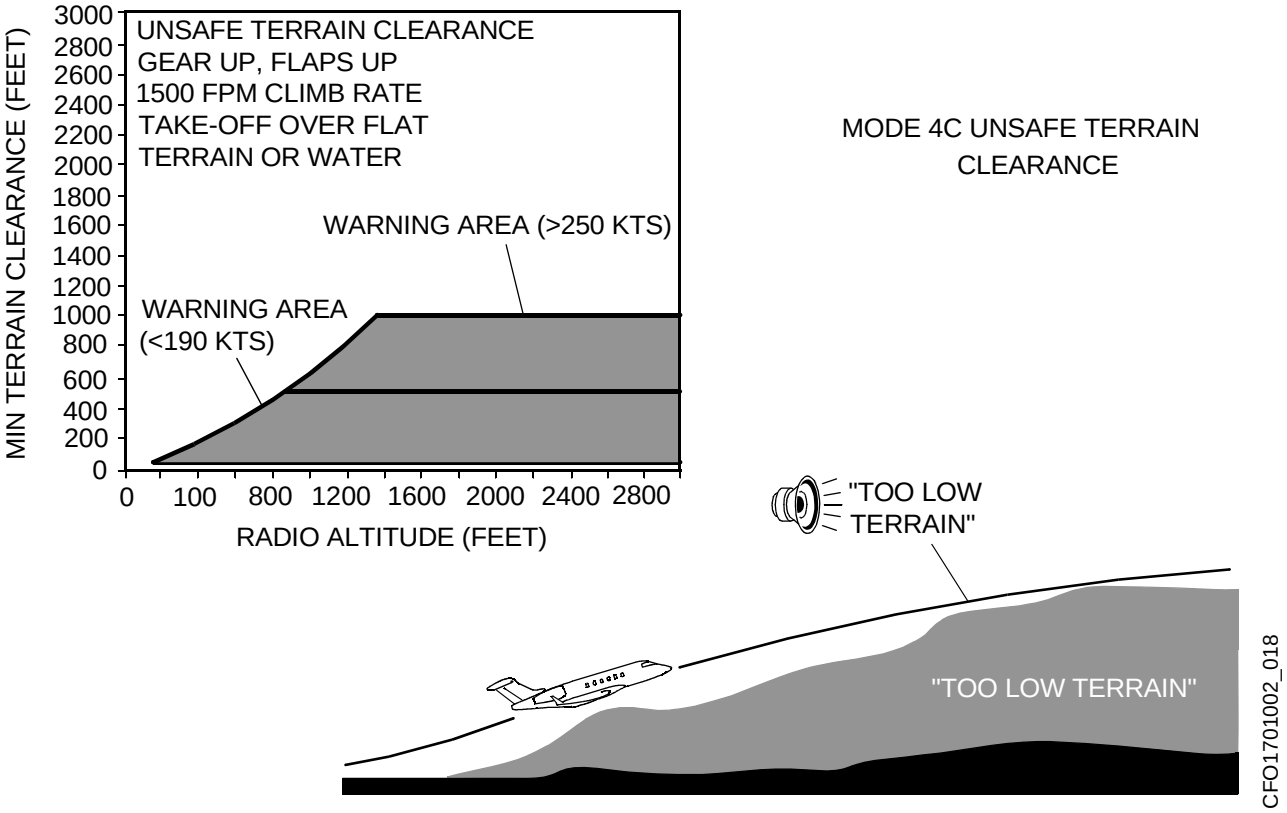

TERRAIN AWARENESS WARNING SYSTEM (TAWS) (Cont)

MODE 5 — Descent Below Glideslope

Mode 5 provides alerts and warnings when the airplane descends below the glideslope on an ILS approach. The alerts and warnings are annunciated in two distinct tones, depending on the position of the airplane on the glideslope.

When the airplane descends more than 1.3 dots (but no more than 2 dots) below the glideslope, a quiet (6 dB) aural "GLIDESLOPE" is generated. If the airplane continues to descend and deviates more than 2 dots below the glideslope, an aural "GLIDESLOPE" warning is generated at the same volume level as all other warnings. An amber GND PROX is displayed on the PFD. The aural and visual alerts and warnings are continuously annunciated until the airplane exits the alert envelope.

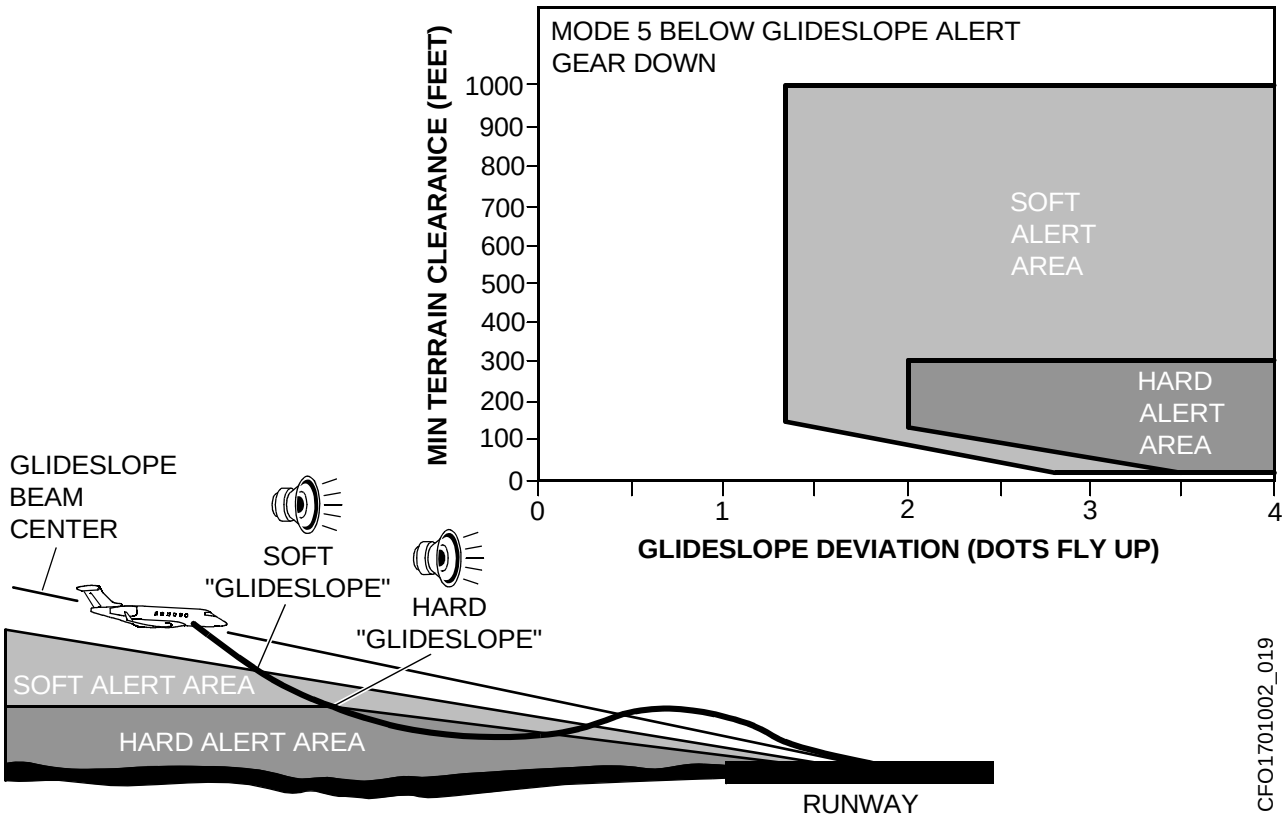

NOTE: The "GLIDESLOPE" aural warning can be muted by selecting the GS switch OFF, which is located on the TAWS WARN panel.

TERRAIN AWARENESS WARNING SYSTEM (TAWS) (Cont)

MODE 6 — Altitude Callouts

Mode 6 provides the following advisory alerts: transition through approach minimums, altitude callouts on approach and excessive bank angles.

- Transition through the preset approach minimums, (APPROACHING DECISION HEIGHT or APPROACHING MINIMUMS), generates an aural “MINIMUMS, MINIMUMS” warning. The warning function is enabled between 1000 feet and 10 feet radio altitude or DH minimums and when the corrected altitude exceeds the MDA value by 200 feet. The landing gear must be down for activation of the warning.
- An altitude callout function generates annunciation for descent below predetermined altitudes. The aural “ONE HUNDRED”, “FIFTY” and “THIRTY” indicates the transition through 100, 50, and 30 feet AGL. The last annunciated or transition altitude is memorized. This will prevent the repeat annunciation of a callout, should the airplane transition through said altitudes again. The memory is cleared and reset, once the airplane climbs to an altitude greater than 1000 feet, or if a transition occurs from approach mode to takeoff mode. A “smart altitude callout” provides an aural “FIVE HUNDRED” at 500 feet radio altitude during a non-precision approach. The callout is generated during a precision approach if the airplane flight path deviates greater than ±2 dots of either the glideslope or localizer. The callout is also generated during a backcourse approach.

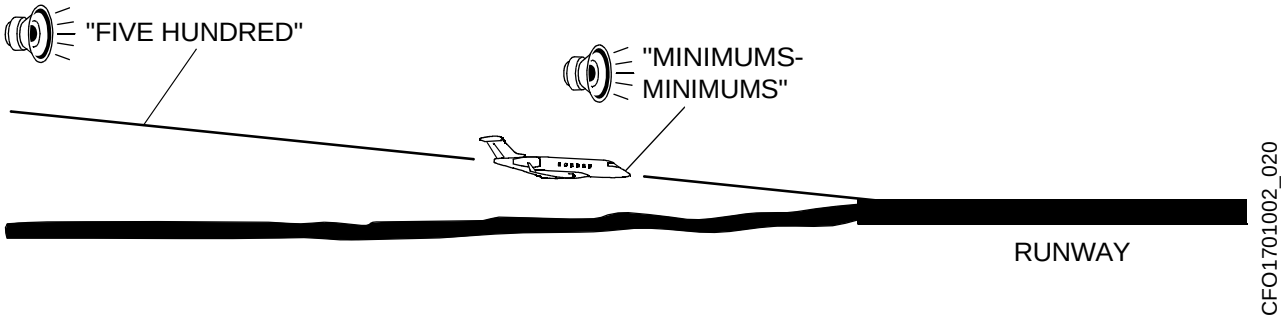

TERRAIN AWARENESS WARNING SYSTEM (TAWS) (Cont)

MODE 6 — Altitude Callouts (Cont)

- The excessive bank angle alert is a function of the roll angle with respect to altitude above ground level. The alert envelope varies linearly from a 10° bank at 30 feet AGL, at 40° of bank at 150 feet AGL, to 55° of bank at 2450 feet AGL. This will generate an aural “BANK ANGLE, BANK ANGLE”. The alert is annunciated once and will repeat if the bank angle increases by 20%. The alert will be annunciated continuously if the bank angle is increased to 55°. The alert will be annunciated until the bank angle is decreased below said value.

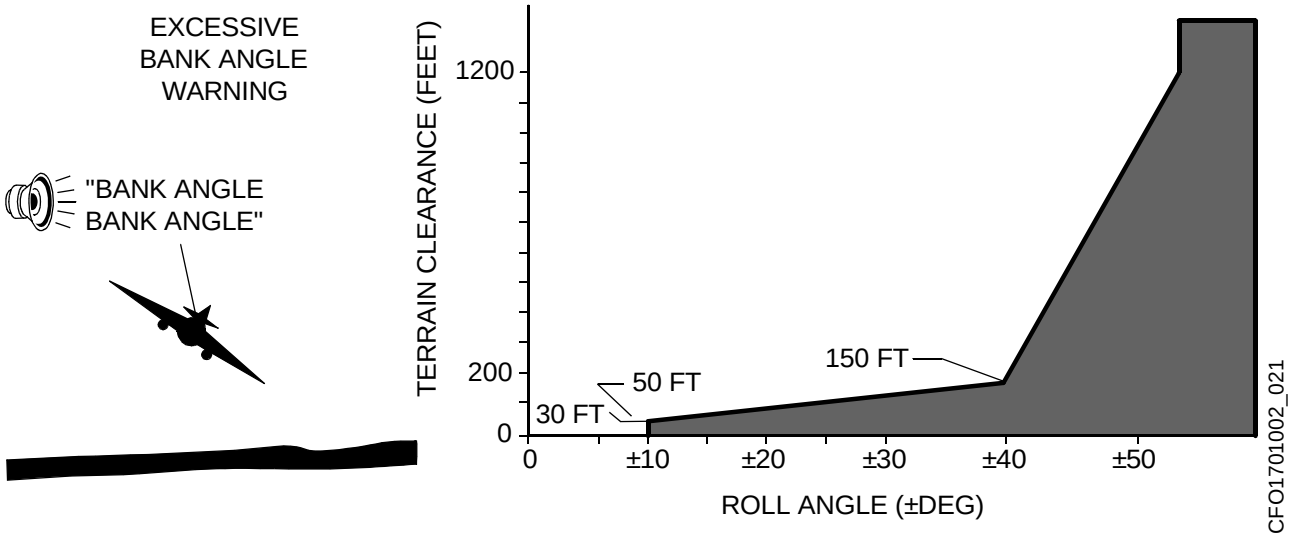

TERRAIN AWARENESS WARNING SYSTEM (TAWS) (Cont)

MODE 7 — Windshear Warning

Mode 7 provides alerts and warnings when significant windshear is detected by the TAWS. Mode 7 is active during takeoff and landings phase of flight only, between 10 and 1500 feet AGL. There are two types of windshear warnings: increasing performance (updraft/headwind) and decreasing performance (downdraft/tailwind).

- For an increasing performance shear (updraft/headwind), the flight director display is removed from the display, an increasing performance shear WINDSHEAR (W) flashes for 5 seconds, then remains steady. An aural tone, “WINDSHEAR WINDSHEAR” warning is activated.
- For a decreasing performance shear (downdraft/tailwind), the flight director display is removed from the display, WINDSHEAR (W) flashes for 5 seconds, then remains steady. An aural tone, “WINDSHEAR WINDSHEAR” warning is activated.

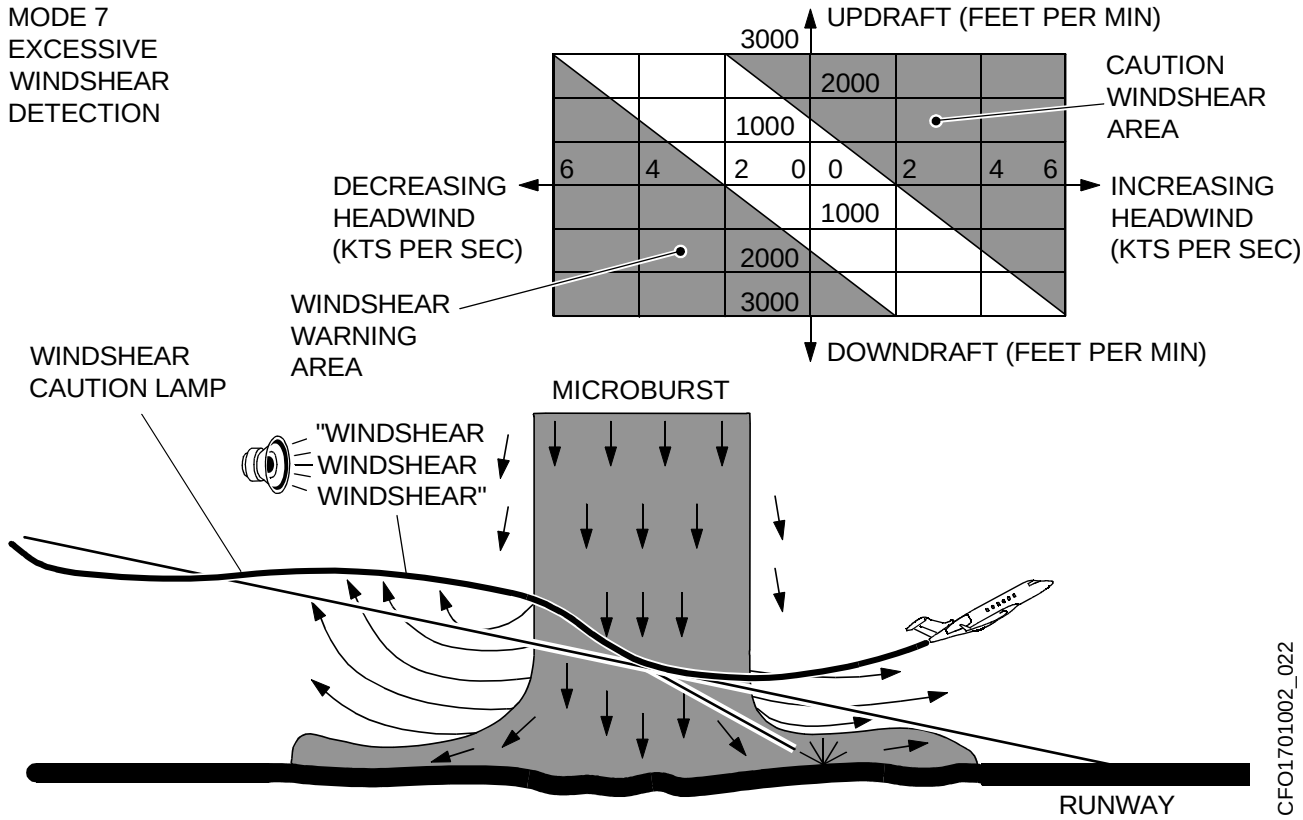

TERRAIN AWARENESS WARNING SYSTEM (TAWS) (Cont)

TERRAIN AWARENESS ALERTING

The terrain alerting function computes minimum terrain clearance envelopes for areas along the flight path of the airplane. The function uses airspeed and flight path angle data in conjunction with a database containing worldwide topographical relief information in grid format. The terrain display is available by pressing the TR/WX button on the DCP. Terrain within 2000 feet of the airplane altitude is displayed. Terrain automatically comes up, in MAP mode, on the MFD at a 10 nm range, if there is a terrain threat caution at 60 seconds from impact. When a terrain threat is detected, an aural “CAUTION TERRAIN, CAUTION TERRAIN” aural is generated and an amber GND PROX is displayed on the PFD. When alerts are activated, areas which meet the terrain threat alert criteria are depicted amber.

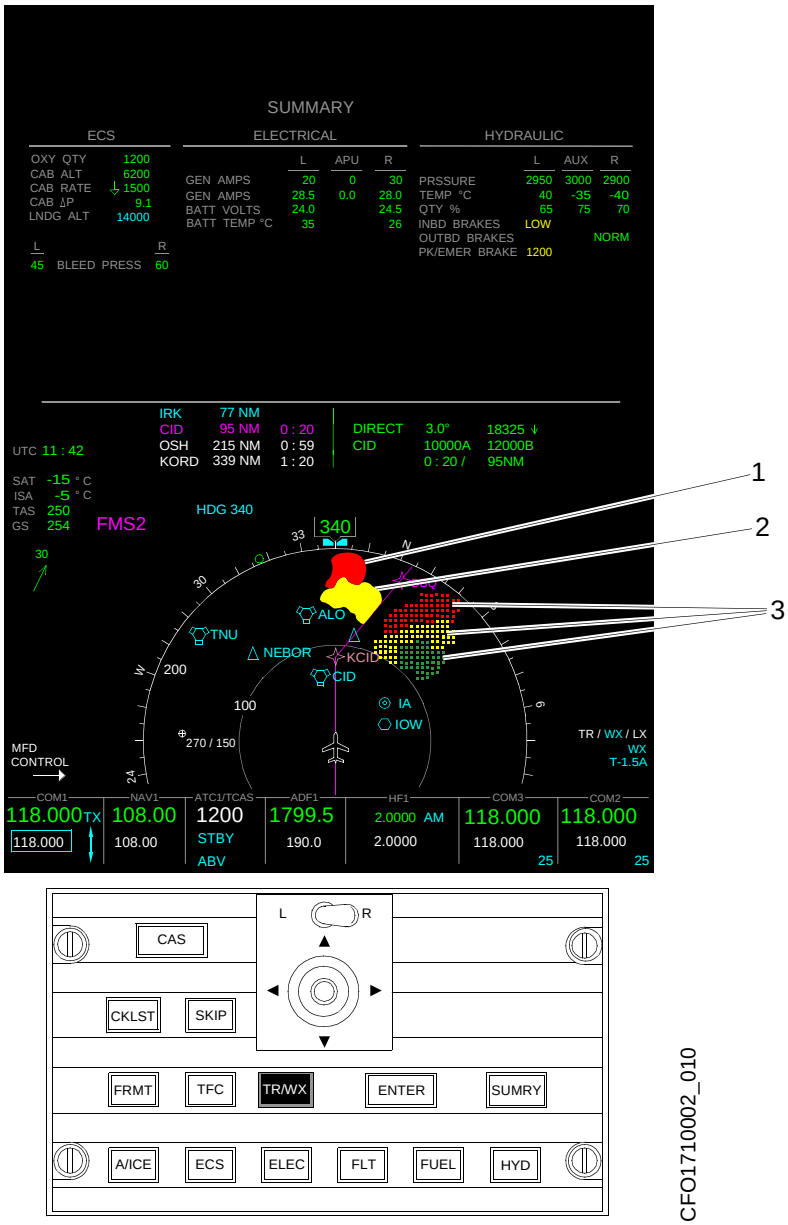

CFO1710002_010

1. SOLID RED — Areas of terrain that satisfy the terrain warning alert criteria.
2. SOLID AMBER— Areas of terrain that satisfy the terrain caution alert criteria.
3. GREEN, AMBER, RED DOT PATTERN — Areas of terrain that are significantly close to the aircraft but do not satisfy warning alert or caution alert criteria.

TERRAIN AWARENESS WARNING SYSTEM (TAWS) (Cont)

TERRAIN AWARENESS ALERTING (Cont)

When a collision with a terrain is predicted, an aural Terrain PULL UP, PULL UP” warning is generated and an amber PULL UP display is annunciated on the PFD. When warnings are activated, areas which meet the terrain collision alert criteria are depicted red. Terrain automatically comes up in MAP mode on MFD at a 10 nm range, if there is a terrain warning at 30 seconds from impact.

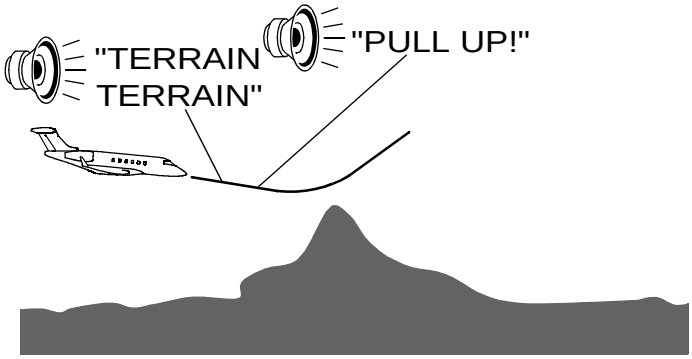

NOTE: When landing at an airport that is not in the database, TERRAIN functions can be inhibited by selecting the TERRAIN switch OFF. The switch is located on the TAWS WARN panel.

TERRAIN AWARENESS WARNING SYSTEM (TAWS) (Cont)

TERRAIN CLEARANCE FLOOR (TCF)

The TCF function supplements the GPWS function by providing an additional terrain clearance alert envelope around airports. The TCF criteria determine alert and warning envelopes.

TCF creates an increasing terrain clearance envelope around the intended airport runway directly related to the distance from the runway. TCF alerts are based on current airplane location, nearest runway center point position and radio altitude, along with an internal database that includes all worldwide, hard-surfaced runways greater than 3500 feet in length.

Penetration of the alert envelope generates an aural “TOO LOW TERRAIN” and an amber GND PROX is displayed on the PFD. The aural alert is repeated twice and again thereafter if the radio altitude value decreases by more than 20% from the altitude at which the initial warning was issued. The amber GND PROX remains displayed until the airplane exits the alert envelope.

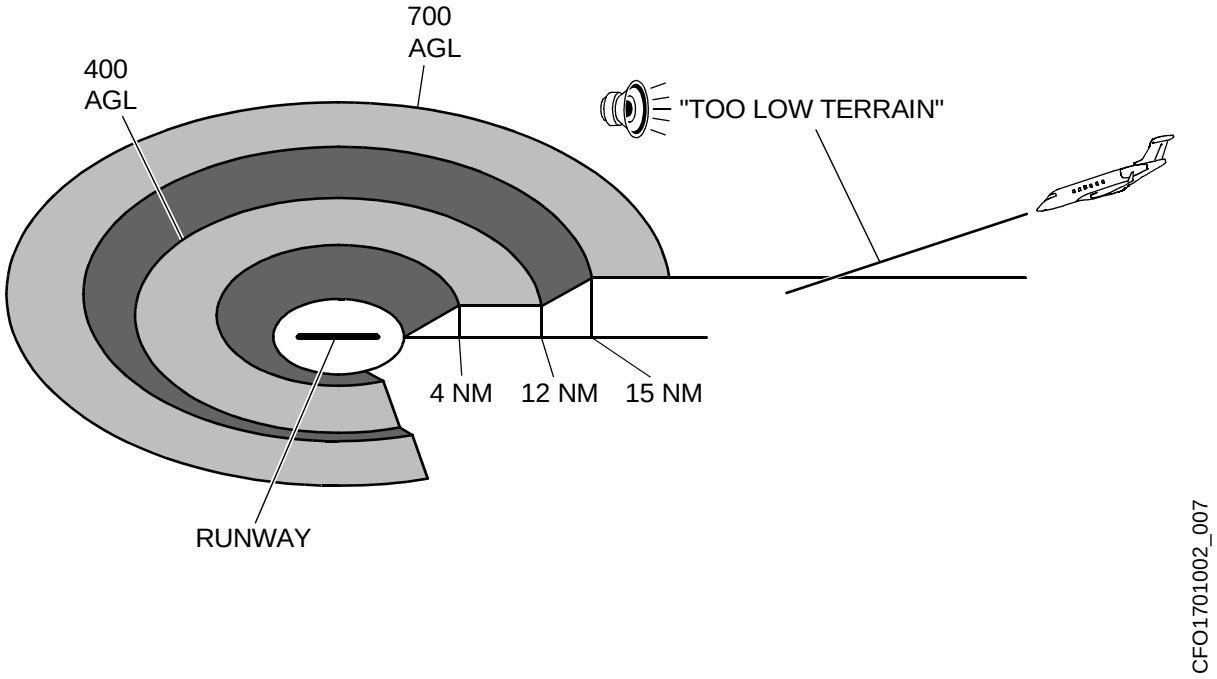

TERRAIN AWARENESS WARNING SYSTEM (TAWS) (Cont)

ANNUNCIATIONS

All terrain annunciations are displayed on the PFD and MFD.

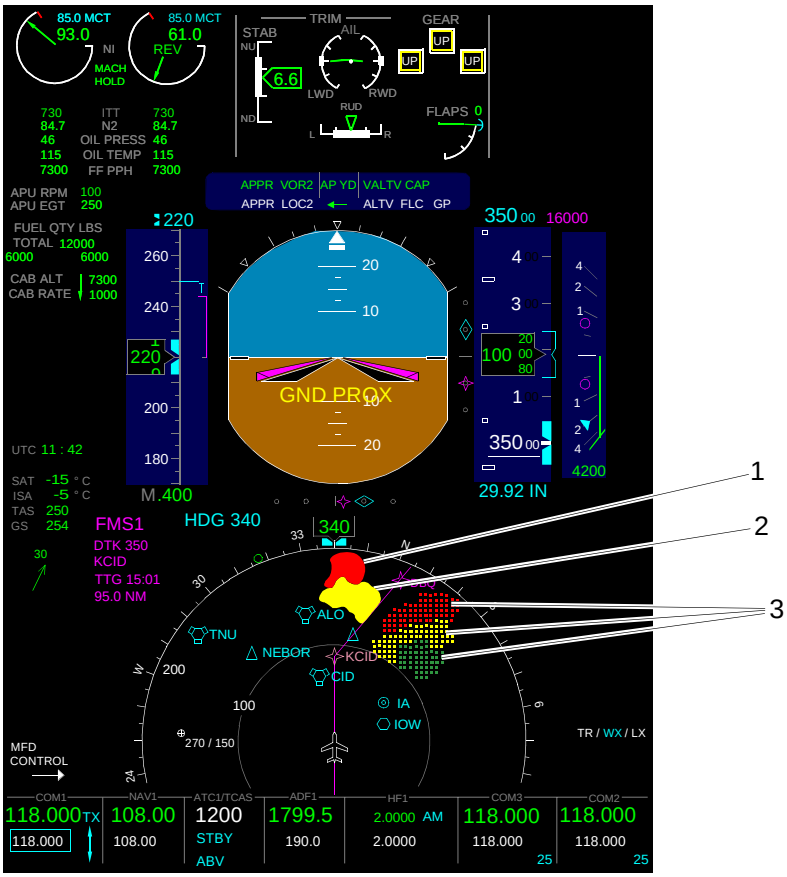

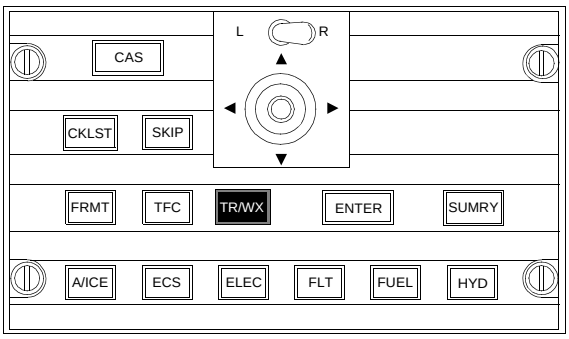

CFO1701002_025

PFD Display Indicating Terrain Data

1. SOLID RED — Areas of terrain that satisfy the terrain warning alert criteria.
2. SOLID AMBER— Areas of terrain that satisfy the terrain caution alert criteria.
3. GREEN, AMBER, RED DOT PATTERN — Areas of terrain that are significantly close to the aircraft but do not satisfy warning alert or caution alert criteria.

WEATHER RADAR

DESCRIPTION

The weather radar is an X-band color weather radar system used for atmospheric moisture detection and ground mapping. The weather radar provides displays of radar-detectable precipitation with in ±60° of the flight path at a selectable range up to 300 nautical miles. The weather radar also provides ground mapping and incorporates features such as autotilt, ground clutter suppression, range compensation and path attenuation correction.

The system consists of a receiver transmitter antenna (RTA) and dual controllers. Radar information is normally displayed on the multifunction display (MFD) in a MAP mode. The AHRS provides stabilization input to the RTA.

In the weather detection mode, storm intensity levels are displayed in four bright colors, contrasted against a deep black background. Areas of very heavy rainfall are displayed in magenta, heavy rainfall in red, less severe rainfall in amber, moderate rainfall in green, and little or no rainfall in black (background). Areas of detected turbulence are displayed in magenta.

Range marks and identifying numerics, displayed in contrasting colors, are used to evaluate the location of storm cells relative to the aircraft.

The ground mapping (GMAP) function is used to improve resolution and identification of small ground targets at short ranges. The reflected signals from ground surfaces are displayed as green, yellow, red, or magenta (most to least reflective).

COMPONENTS AND OPERATION

WEATHER RADAR OPERATIONAL MODES

The basic weather radar operational modes can be categorized as follows:

RADAR CONTROL MENU

Weather radar functions are controlled on the radar menu. The radar menu can be displayed on the PFD by pressing the RADAR button on the display control panel. Selection of the radar display is accomplished by pressing the TR/WX button on the display control panel. Range and tilt are controlled by the respective knobs on the display control panel.

STBY MODE

STBY is the first mode selection in the RADAR CONTROL menu. The antenna is stowed in tilt-up position and is neither transmitting nor scanning, although power is still applied to the system. The radar is in this mode, after the system power up, or after the mode is selected by the pilot. This mode is automatically selected 60 seconds after the transition to ground has been performed.

WX MODE

WX is the second mode selection in the RADAR CONTROL menu. This mode is a four-color weather display representing four different precipitation rates.

WX-T MODE (WITH TURB RTA INSTALLED)

WX-T mode is the third selection in the RADAR CONTROL menu. This is a four-color weather display mode plus turbulence mode.

TURB MODE (WITH TURB RTA INSTALLED)

TURB is the fourth mode selection in the RADAR CONTROL menu. This turbulence only mode allows turbulence to be separated from heavy rainfall. After 30 seconds it reverts back to the previous selection.

MAP MODE

MAP mode is the fifth selection in the RADAR CONTROL menu. This mode is typically used for detection and display of prominent and familiar ground features as an aid to navigation.

LIGHTNING DETECTION SYSTEM (OPTIONAL)

The optional lightning detection system maps the location of thunderstorm activity 360° around the airplane to a distance of 200 nautical miles. Lightning symbology is displayed as lightning bolt icons. The lightning icons are color coded to identify different levels of lightning intensity. Light levels of thunderstorm cells (1-4 strikes) are yellow, medium level cells 5-9 strikes) are red, and heavy level cells (over 9 strikes) are magenta.

WEATHER RADAR (Cont)

TEST MODE

The test mode is the sixth selection in the RADAR CONTROL menu. In this mode, a simulated target return is used to create a rainbow like pattern of colors on the display. While the radar is in this mode, the transmitter is turned OFF.

TARGET ALERT

The target mode message TGT changes from cyan to yellow to indicate a target alert.

A target alert is issued if either channel (pilot or copilot side) of the weather radar reports a target. The TGT message flashes for 5 seconds, then remains steady as long as the radar detect a target.

SECTOR SCAN MODE

This is a reduced antenna azimuth scan mode, which restricts mechanical scan angle used and processed by the RTA.

This mode can be used with any other scanning mode of operation and is used to increase the radar update rate.

While in this mode, antenna scan range is maximum ± -30° from the aircraft heading line. If either command channel is in target mode, sector scan is disabled.

GROUND CLUTTER SUPPRESSION GCS MODE

This feature is selected, those radar returns that appear as ground clutter are suppressed. This feature eases the interpretation of rainfall when viewed from higher altitudes by eliminating much of the display caused by ground returns.

AUTOTILT MODE

Autotilt automatically adjusts the antenna tilt angle to attempt to keep the radar scanning approximately the same region of space when the aircraft climbs and descends.

Autotilt is designed to reduce the number of times the aircrew needs to adjust the TILT control whenever the aircraft altitude or radar range setting changes.

Autotilt may be selected on or off when the RADAR menu is active, or anytime the radar tilt value show on the on-side display. Autotilt may be enable continuously as the system always uses the current manual tilt setting as the starting point.

RADAR ANTENNA

The antenna sweep is selectable for either 120 degrees (60 degrees each side of the airplane) or 60 degrees (30 degrees each side). The antenna tilt is adjusted between -15 degrees (down) and + 15 degrees (up). The antenna maintains its stabilization with respect to the horizon regardless of the airplane attitude (within -15 to +15 degrees).

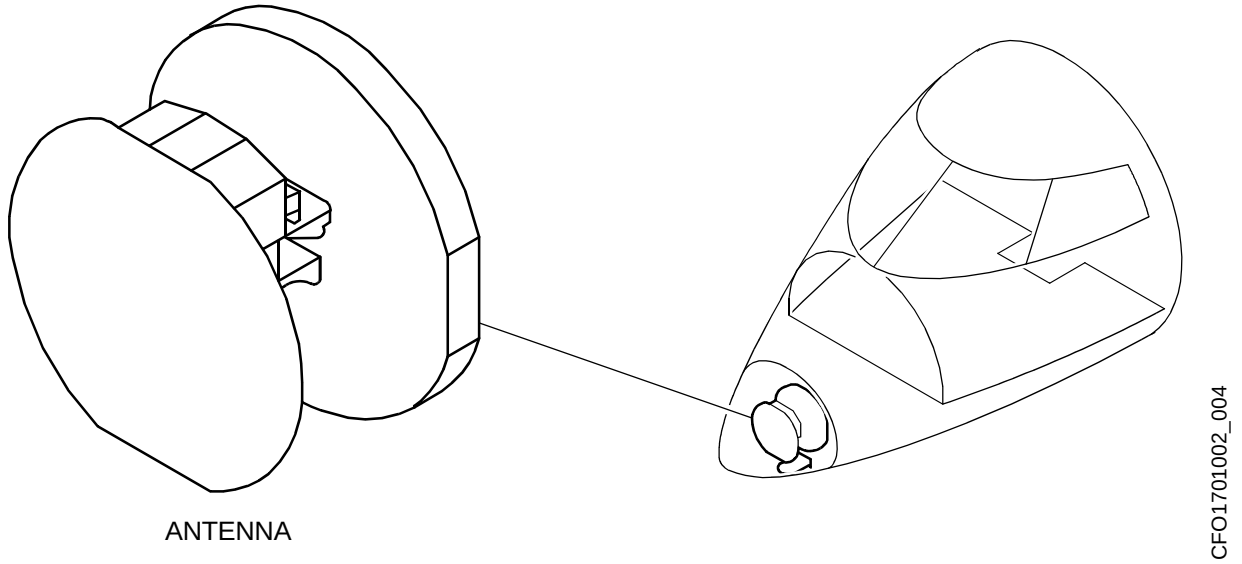

FLIGHT MANAGEMENT SYSTEM (FMS)

DESCRIPTION

The Rockwell Collins FMS-5000 Flight Management System single or dual FMS is a fully integrated navigation and flight management system designed to provide the pilot with the following features:

- En-route, terminal, and Non-Precision Approach Lateral and Vertical Navigation with automatic transition to the Precision Approach.
- Flight plan management.
- Multi sensor navigation.
- Maps and text data display.
- Performance management.

The system is integrated with a GPS receiver which processes the transmissions from multiple GPS satellites simultaneously to calculate navigation solutions based on information from all satellites available. A minimum of four satellites with acceptable geometry, or three satellites plus calibrated barometric altitude are required in order to calculate a navigation solution. The computed GPS position, velocity and time are inputs to the FMS, which integrates this data into the flight plan based navigation solution. AHRS, ADC, DME, and VOR systems also supply data for use by the FMS. The FMS provides necessary controls for all input sensors, when appropriate, via the control display unit (CDU).

When a single FMS system is installed, it is operated via the CDU installed on the right side of the center pedestal. When two FMS systems are installed, each CDU controls its on-side FMS.

The FMS can be initialized, waypoints and destination selected by a variety of means. SID, STAR, and airways are accommodated. A great circle route is calculated between waypoints for enroute lateral navigation (LNAV), and roll steering is provided to the flight control system (FCS). A sophisticated interface with the FCS allows the FMS vertical navigation (VNAV) function to select various FCS vertical modes of navigation. This sophisticated VNAV interface is often referred to as coupled VNAV. The VNAV and LNAV capability can be advisory only, if the FMS is not coupled. The FMS provides vertical steering when required by the FCS.

FMS interfaces with the EFIS displays to provide conventional navigation information, state-of-the art map presentation, performance and optional Vspeed data.

Refer to the *Rockwell Collins Pro Line 21 Avionics System Challenger 300 Operator's Guide* for a detailed description and operation of the flight management system. Included in the operator's guide is their website to obtain the latest performance database updates from Rockwell Collins Inc.

CONTROL DISPLAY UNIT (CDU)

FLIGHT MANAGEMENT SYSTEM (FMS) (Cont)

COMPONENTS AND OPERATION

DEAD RECKONING (DR)

When no navigation sensor data is available for the FMS to use, it begins navigating in the DR mode. In this mode, it estimates its position based only on the last known position, heading, and airspeed. To identify this mode, FMS DR is annunciated on the MFD and on the PFD if the NAV SOURCE is FMS. It also shows on the CDU message line and MESSAGES page.

FMS CALCULATED VSPEEDS (Optional)

The VSPEEDS function allows the pilot to set or adjust takeoff and approach speeds on the PFD, and show those reference speeds on the airspeed tape. FMS calculated VSPEEDS are an option on the aircraft.

The pilot can manually set the takeoff and approach reference speeds or adjust FMS calculated Vspeeds on the PFD with the REFS menu and display control panel (DCP). VSPEEDS are grouped on the REFS menu pages into takeoff speeds and approach speeds.

The pilot may accept the default or FMS calculated VSPEEDS value, or set a different value. The PFD show the reference speed as a digital readout on the speed reference table at the bottom of the airspeed tape. It also sets a reference bug for each separate VSPEED at the appropriate speed on the airspeed scale. Manually set VSPEED values show in cyan characters, FMS calculated VSPEEDS show in magenta characters. VSPEEDS can be a combination of FMS calculated and manually set values.

The FMS, however, does not compare actual aircraft data against the data manually input by the pilot on the CDU TAKEOFF REFERENCE or CDU APPROACH REFERENCE pages.

It is necessary for the pilot to verify and validate that the aircraft configuration and environmental conditions input into the FMS reflect the correct conditions for takeoff or approach.

After actual takeoff or approach configuration has been achieved, but before posting FMS computed VSPEEDS on the PFD, the aircrew should verify that the inputs that were entered into the FMS for computation of takeoff or approach performance reflect the actual or intended takeoff or approach conditions.

A summary of the takeoff performance data is presented on the MFD TAKEOFF REFERENCE page. A summary of the approach performance data is presented on the MFD APPROACH REFERENCE page. These pages can be accessed by selecting the CDU MFD DATA key while the corresponding CDU takeoff or approach reference page is displayed. It may also be accessed by pressing the CDU MFD DATA key followed by the MFD MENU key and selecting the desired page.

To manually exit the REFS menu, push another menu button on the DCP. The menu is automatically removed 20 seconds after the last activity of the MENU, DATA, OR PUSH SELECT knob, or another menu or list button is pushed.

GPS CONTROL

The GPS Control page shows position differences (POS DIFF) between each GPS sensor position and the position calculated by the FMS. Both direction and distance are shown.

The line select key for each installed GPS sensor enables or disables the use of the sensor by the FMS. If a GPS sensor has been DISABLED it remains disabled until manually enabled.

GLOBAL POSITIONING SYSTEM (GPS)

The GPS is used to determine airplane position and provides supplementary information to FMS and TAWS and the clock. The GPS calculates the latitude, longitude, altitude, accurate time, date, true heading and ground speed.

The global positioning system (GPS) is a space based navigation system, which consists of 26 satellites, at an altitude of approximately 10 900 nm and an orbital period of 12hr. Each satellite transmits a signal on the L1 (1575.42MHz – for general aviation use) and L2 (1227.6MHz– for P-code / military use only) frequencies. The signal contains digital data used to measure line-of-sight range and compute the position and time at the receiver. Pre-departure verification of GPS availability is required for GPS as a primary means of navigation before each flight.

FLIGHT MANAGEMENT SYSTEM (FMS) (Cont)

Four or more available satellites allow receiver to autonomously compute the position integrity. The position can be calculated (with the required integrity) on the basis of the 3 satellites data available in addition to an air data altitude. The system permanently performs the receiver autonomous integrity monitoring (RAIM) process, which represents the method of detecting and isolating the satellite errors by using the redundant satellite measurements. Five satellites are required to detect a satellite error and six satellites are required to isolate the error to an individual satellite and remove it from the navigation solution.

The system supports: en route (including VNAV), terminal and non-precision approach (except localizer, localizer directional aid and simplified directional functionality) capability. The system provides current position, velocity and time to FMS and TAWS.

PREDICTED RAIM

By predicting future satellite positions, GPS is capable of estimating the availability of approach accuracy. This feature is called predictive RAIM. The GPS may be used for primary navigation in oceanic and remote areas, provided a qualified GPS sensor is installed in the airplane. Qualified GPS sensors include a ground based prediction program that verifies GPS navigation availability over the planned route. Pre-departure verification of GPS availability is require for GPS as primary means of navigation before each flight.

Status and integrity of the GPS position solution shows on the MFD LRN STATUS page. RAIM is used to assure that the GPS solution meets the required accuracy criteria that follow:

- 4 nm for oceanic/remote
- 2 nm for enroute
- 1 nm for terminal
- 0.3 nm for approach

The measured accuracy limit indicates the maximum estimated error based on measurement inconsistency. When an error is detected, it is annunciated on the LRN STAUS page.

The LRN STATUS text page on the MFD shows:

- Each installed GPS
- Current latitude and longitude position of each sensor
- Current tracking direction and speed of each sensor
- Current operating mode of each sensor
- Number of satellites in use by each sensor
- RAIM accuracy limit of each sensor
- Measured accuracy limit of each sensor
- Probable error of each sensor

REQUIRED NAVIGATION PERFORMANCE (RNP)

RNP is a statement of the navigation performance accuracy necessary for operation within a defined airspace. The RNP value may be specified by the pilot by entering the value on the FMS PROGRESS page. The FMS computes its expected position accuracy based on the sensors in use. The expected position accuracy (POS ACCURACY) is also displayed on the PROGRESS page. When flying in RNP airspace the FMS position error should be less than the RNP value 95% of the time. If the expected position accuracy error is more than the RNP value, a message LOW POS ACCURACY is displayed on the CDU and navigation by other means must be utilized.

SATELLITE DESELECT

Individual satellites can be deselected from use by entering the identifier for the satellite in the FMS. This function would be used if a satellite is NOTAM'd under test. When deselected, the FMS ignores the data from the satellite.

CONTROLS AND INDICATIONS

NAVIGATION COMPONENTS

AUDIO CONTROL PANEL

MFD CONTROL PANEL

CONTROL DISPLAY UNIT

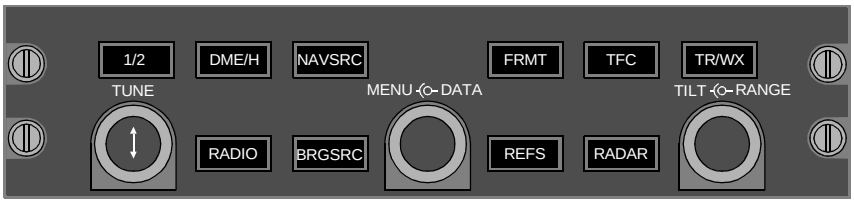

DISPLAY CONTROL PANEL

CFO1701002_001

EICAS MESSAGES

The navigation system messages are shown on the EICAS. In the navigation system messages are listed. A brief explanation for each message is provided.

MESSAGE	INHIBITS	MEANING	AURAL WARNING
TAWS BASIC FAIL	TO/LAND	Some of the basic modes (Mode 1 thru 6) of the terrain awareness warning system have failed	
TAWS SYSTEM FAIL	TO/LAND	The terrain awareness warning system has failed	
TAWS TERR FAIL	TO/LAND	The terrain function of the terrain awareness system has failed	
TAWS TERR NOT AVAIL	TO/LAND	The TAWS terrain data base has no data for the current location	
TAWS WINDSHEAR FAIL	TO/LAND	The windshear function of the terrain awareness warning system has failed	
TAWS FLAPS OFF		The flap warning function of the terrain awareness warning system has been selected OFF by the crew	
TAWS GS WARN OFF		The glideslope warning function of the terrain awareness warning system has been selected OFF	
TAWS TERR OFF		The terrain warning function of the terrain awareness warning system has been selected OFF	

Table of Contents

Introduction 18-01-01
Honeywell AS907 Engine Sections 18-01-01
Engine Construction 18-01-02
Description 18-01-02
Airflow Paths 18-01-02
Major Powerplant Components 18-01-03
Engine Fuel System 18-01-04
Description 18-01-04
Components and Operation 18-01-04
Fuel Pump 18-01-04
Fuel/Oil Heat Exchanger and Fuel Filter 18-01-04
Fuel Metering Unit 18-01-04
Fuel System Operation 18-01-04
Engine Control System 18-01-05
Description 18-01-05
Components and Operation 18-01-05
FADEC Unit 18-01-05
Electrical Power 18-01-05
Engine Idle 18-01-05
Engine Condition and Fault Reporting (ECFR) 18-01-06
Thrust Calculations 18-01-07
Thrust Mode Annunciation 18-01-07
Max Power (APR) 18-01-07
Auto APR Function 18-01-07
Normal-Rated Takeoff N_1 Indications (TO) 18-01-07
Climb Thrust (CLB) 18-01-08
Cruise Range (CRZ) 18-01-08
Bleed Air Extraction 18-01-08
N_1 and N_2 Synchronization 18-01-09
Description 18-01-09
Engine Synchronization 18-01-09
Mach Hold 18-01-10
Engine Oil System 18-01-10
Description 18-01-10
Components and Operation 18-01-10
Engine Oil Pressure Indications 18-01-10
Engine Oil Level and Replenishment System 18-01-11
Engine Oil Temperature 18-01-11
Engine Lubrication Schematic 18-01-12
Engine Bleed Air System 18-01-13
Description 18-01-13
Components and Operation 18-01-13
Engine Starting System 18-01-14
Description 18-01-14
Components and Operation 18-01-15
Starter Control Valve 18-01-15
Air Turbine Starter (ATS) 18-01-15
Start Sequence 18-01-15
Engine Motoring 18-01-16

Table of Contents (Cont)

Ignition System 18-01-16
Description 18-01-16
Components and Operation 18-01-16
Engine Starting 18-01-16
Aerodynamic Stall 18-01-16
Flameout Protection 18-01-17
Thrust Levers 18-01-17
Description 18-01-17
Components and Operation 18-01-17
Thrust Levers 18-01-17
Thrust Reverse Levers 18-01-17
Thrust Reverser System 18-01-19
Description 18-01-19
Components and Operation 18-01-19
Thrust Reverser 18-01-19
Reverse Thrust Operation 18-01-21
Isolation Control Unit 18-01-21
Directional Control Unit 18-01-21
Vibration Monitoring System 18-01-22
Description 18-01-22
Components and Operation 18-01-22
Vibration Monitoring System 18-01-22
Controls and Indications 18-01-23
Description 18-01-23
Engine Control Panel 18-01-23
Thrust Lever Quadrant and Engine Control Panel 18-01-23
Engine Start Controls 18-01-24
Air Cond/Bleed Control Panel 18-01-24
EICAS Display 18-01-25
EICAS Messages 18-01-25

INTRODUCTION

The Challenger 300 is equipped with two Honeywell AS907 high-bypass turbofans. Each powerplant is controlled by a full authority digital engine control system (FADEC).

The AS907 turbofan engine is a 4.2 bypass ratio, two-spool direct drive turbofan engine. The single-stage, wide-chord fan is directly driven by a three-stage low-pressure turbine. The core consists of a four-stage-axial compressor with two stages of variable geometry, a single stage of centrifugal compressor, a through-flow annular combustor, 16 fuel nozzles, 2 ignitors and a two-stage high-pressure turbine. Exhaust system includes an exit guide vane, a mixer nozzle and a centerbody. The accessory gearbox mounts the engine air turbine starter and provides accessory drive pads for mounting the hydraulic pump and generator, as well as providing lubrication for the engine.

FLAT-RATED THRUST

Outside air temperature and pressure altitude are determining factors in achieving takeoff power. Increases in ambient temperature or pressure altitude adversely affect the engine's ability to produce rated thrust. Normal takeoff thrust rating is 6826 pounds. The AS907 is flat rated to ISA +15 °C (86 °F) at sea level. Automatic power reserve (APR) provides flat rated takeoff thrust to ISA + 20 °C (95 °F). APR is invoked either during one engine inoperative condition, with TLA at or above takeoff detent and APR armed, or when the throttle is pushed to the forward mechanical stop.

HONEYWELL AS907 ENGINE SECTIONS

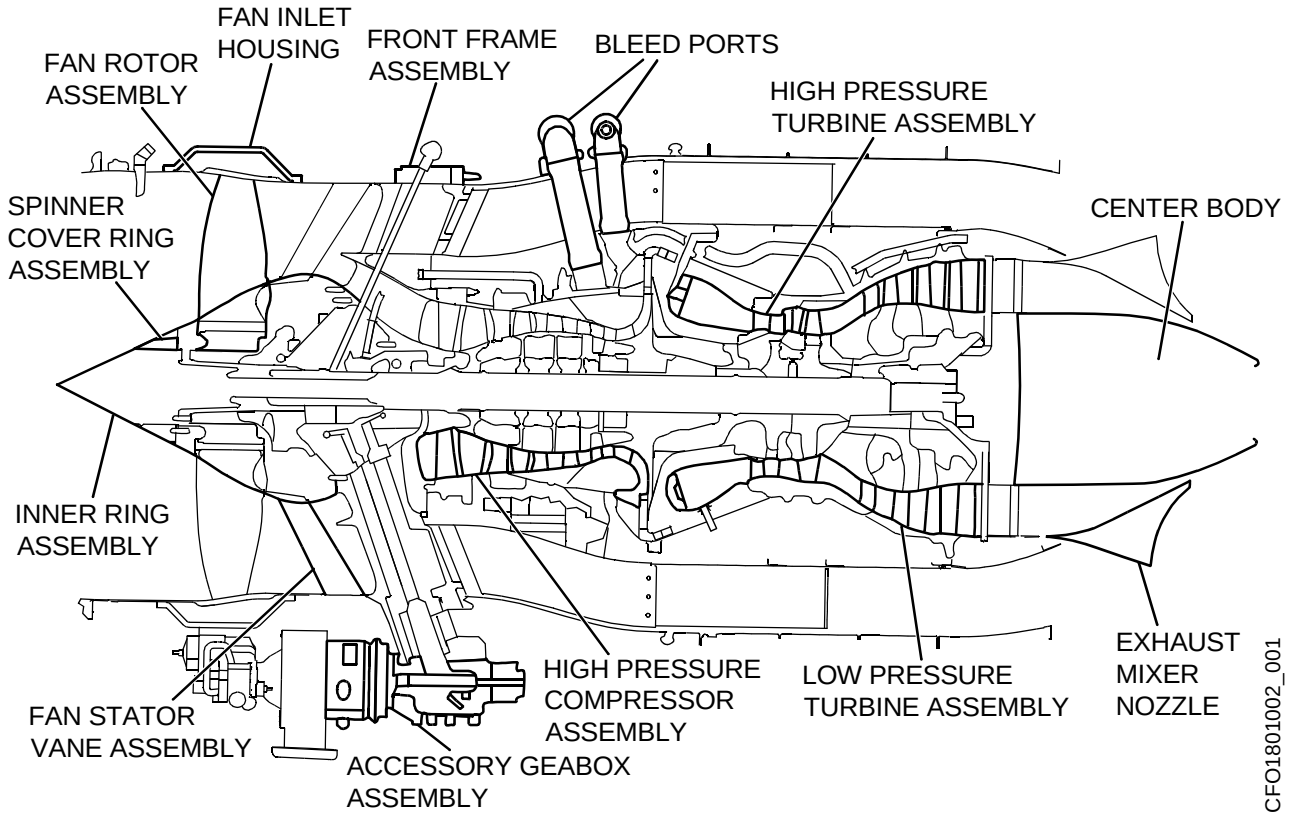

ENGINE CONSTRUCTION

DESCRIPTION

The AS907 powerplant has two independent major assemblies. The N1 section consists of a fan rotor that is driven through a shaft by a three stage low-pressure turbine. The N2 section is comprised of four axial flow and one centrifugal compressor, combustor, accessory gearbox and a two stage high pressure turbine. The high pressure turbine drives the compressor.

AIRFLOW PATHS

Inlet air is initially accelerated and compressed by the fan and is split into two streams. A large percentage of the fan air exits into the bypass duct. The remainder is directed into the core of the engine. This core airflow passes through a four stage axial compressor and a single stage centrifugal compressor. Exiting the high pressure compressor diffuser the airflow is directed into the in line annular combustor where fuel is injected. The fuel/air mixture is ignited and a continuos combustion is maintained. The expanding gases are then directed through the two stage high pressure and three stage intermediate turbine assembly, driving both rotating groups, and exiting the engine through the mixer nozzle.

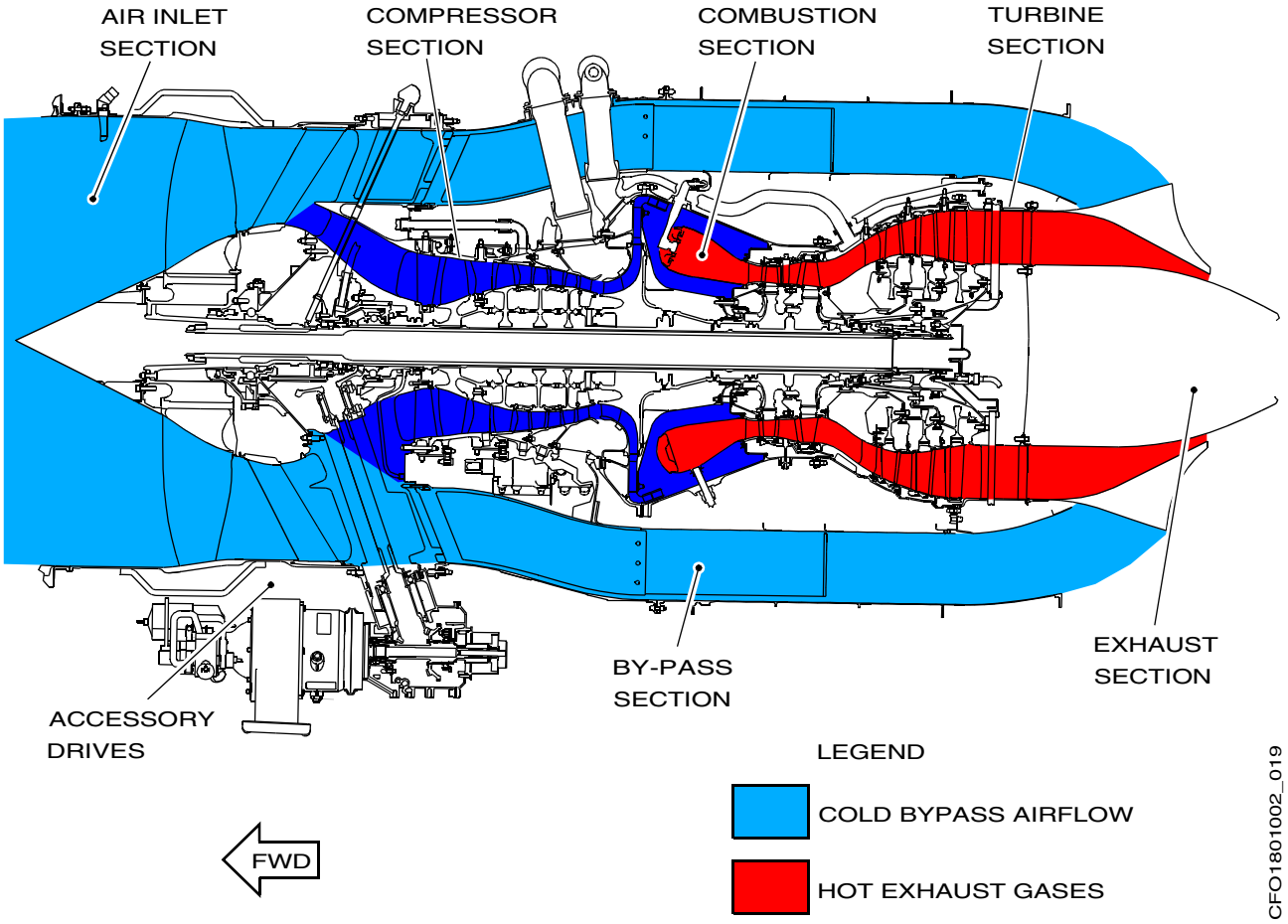

ENGINE CONSTRUCTION (CONT)

MAJOR POWERPLANT COMPONENTS

N_1 FAN

N_1 fan consists of twenty two titanium inserted blades. the fan containment system uses an aluminum honeycomb material surrounded by an aramid fiber wrap.

N_1 fan speed is indicated on the EICAS.

N_2 COMPRESSOR

The N_2 compressor is a variable geometry (VG) axial flow compressor that is mechanically driven by the high-pressure turbine assembly.

The variable geometry (VG) system regulates airflow across the N_2 compressor by changing the position of the inlet guide vanes and the stator vane for the inlet and first stage of the compressor. The VG system optimizes the angle of attack of the airflow at the compressor blades and provides compressor stall and surge protection.

The VG inlet guide vanes and stators are programmed by FADEC and positioned by actuators and mechanical linkage. High-pressure fuel from the engine fuel metering unit is used to hydraulically move the actuators.

N_2 speed is displayed on the EICAS. There is no EICAS indication for the variable geometry system.

ACCESSORY GEARBOX

The N_2 compressor drives the engine accessory gearbox. Mounted on the gearbox are:

- Engine lubrication pumps
- Hydraulic pump (EDP 1 or EDP 2)
- Engine fuel pump and fuel metering unit (FMU)
- Air turbine starter
- Integral oil reservoir
- Generator
- Permanent Magnet Alternator (PMA)

The PMA provides three-phase power to each engine control unit (ECU). The ECU measures N_2 from one of the three phase inputs. The PMA is designed to provide the electric power required by the control system and engine at and above 45% N_2. This speed is less than the minimum N_2 idle speed. The PMA is considered to be the primary source of ECU power, with 28 VDC from the aircraft being the backup source. Aircraft 28 VDC power is required for starting and shutdown.

ENGINE FUEL SYSTEM

DESCRIPTION

Fuel is delivered to the fuel injectors at the pressures and flow rates necessary to maintain the desired engine thrust. The engine fuel system also performs the following functions:

- Compressor variable geometry actuator.
- Cool the engine oil (heat transfer).
- Actuate and lubricate fuel system components.
- Provide motive flow for the scavenge and main ejector pumps.

Combustion fuel can be interrupted by moving the L (R) ENGINE run switches to STOP or by selecting the L (R) ENGINE FIRE switches. The STOP position shuts off the fuel at the fuel metering unit. The L (R) ENGINE FIRE switch closes the fuel shutoff valve and the fuel metering valve shutoff valve.

COMPONENTS AND OPERATION

FUEL PUMP

The fuel pump mounted on the accessory gearbox is comprised of three separate pumps contained within a single housing. The fuel pump provides fuel under high pressure and at flow rate that exceeds the requirements of the engine at any power setting. Excess fuel is bypassed back through the fuel filter system for re-circulation.

Fuel pump pressure is also used to generate motive flow for the scavenge and main ejectors of the aircraft fuel system.

FUEL/OIL HEAT EXCHANGER AND FUEL FILTER

A fuel/oil heat exchanger warms engine fuel and cools engine oil. The engine fuel temperature is indicated on the FUEL synoptic page.

A 10 micron fuel filter is used to remove solid contaminants from the fuel. The filter is depicted on the FUEL synoptic page. An impending fuel filter bypass condition on either engine is reported by an advisory CAS message L(R) ENGINE FUEL BYPASS. A dual impending fuel filter bypass condition on both engines is reported by a caution CAS message (ENGINES FUEL BYPASS).

FUEL METERING UNIT

The fuel metering unit (FMU) is an electrohydraulic device that meters and distributes the fuel needed for combustion based upon control signals from the FADEC system. The FMU's primary components are the fuel metering valve and pressurizing and shutoff valve. The metering valve supplies fuel in response to commands from the FADEC to maintain combustion under all operating conditions. The pressurizing and shutoff valve controls the supply of fuel for combustion.

The FMU also supplies the high-pressure fuel to actuate the VG inlet guide vanes and compressor stator vanes.

FUEL SYSTEM OPERATION

The main fuel ejectors or DC powered boost pumps deliver fuel from the collector tanks via fuel feed manifolds to the engines. Engine fuel shutoff valves (SOVs) are installed in the manifold to interrupt the supply of fuel to the engines during a fire. The L (R) ENGINE FIRE switches control the SOVs.

At the engine, the fuel is pressurized, heated, filtered, metered, and distributed to the combustion chamber. All fuel scheduling is controlled by the FADEC.

ENGINE CONTROL SYSTEM

DESCRIPTION

The Honeywell AS907 powerplant is controlled by the full authority digital electronic control (FADEC) system. The FADEC provides a full range of engine control, including thrust reverser control under all steady state and transient engine conditions. The FADEC controls the operation and performance of the engine through three subsystems: fuel control, compressor airflow management, and engine starting/ignition control.

COMPONENTS AND OPERATION

FADEC UNIT

Critical functions of the FADEC include:

- Control of engine thrust within the required limits, including control of bleed valves, compressor guide vanes (CGVs), and nacelle anti-ice bleed flow
- Validates N_1, N_1 limits, and interstage turbine temperature (ITT)
- Thrust reverser operation
- Overspeed circuits

Each powerplant has its own dual-channel FADEC computer. One FADEC channel operates as the in-control channel and processes information to provide engine control outputs. The other channel operates in standby. The standby channel processes all the input information but does not provide control output with one exception. Both the in-control and standby channels will respond to an engine overspeed by commanding the shutoff valve in the fuel metering unit to close in order to return the engine to an on-speed condition.

The in-control and standby channels continuously share command and status data through a crosstalk data bus. Should the designated in control channel become unserviceable, the standby channel assumes the in control role.

During normal operations with two serviceable FADEC channels, FADEC software directs the channels to alternate in-control and standby roles on each successive engine start.

FADEC malfunctions are presented as either caution or advisory messages. Each message has a different impact on the dispatch ability of the aircraft.

ELECTRICAL POWER

The PMA ensures FADEC supply when N_2 is greater than 45%. For engine starting and whenever N_2 is below 45%, the aircraft electrical system supplies power to the FADEC system.

ENGINE IDLE

When the thrust lever is placed at IDLE, the minimum N_2 idle rpm is programmed by the FADEC. Idle rpm is dependent upon atmospheric information, bleed-air loading and phase of flight.

The FADEC will always program the best idle speed for any phase of flight. When the aircraft transitions from one flight phase to the next, idle rpm is automatically adjusted. There are three different N_2 idle settings: flight idle, reverse idle, and ground idle.

FLIGHT IDLE

Flight idle refers to the idle setting used when the thrust lever is set to idle while airborne (weight-off-wheels).

ENGINE CONTROL SYSTEM (Cont)

GROUND IDLE

N_2 ground idle is the minimum thrust setting. It is selected when weight is on wheels and the thrust lever is idle. Ground idle varies with altitude and temperature. Increases in altitude or ambient temperature result in an increase in N_2 idle rpm. Decreases in altitude or ambient temperature result in a decrease in N_2 idle rpm.

REVERSE IDLE

When reverse idle is selected, reverse balk is activated by the FADEC. Further movement rearward beyond the REV detent is restricted until the thrust reverser is fully deployed.

SINGLE ENGINE THRUST MANAGEMENT

The FADEC computers continuously crosstalk to share data on the health of each engine. The FADEC will automatically activate the APR function on the operating engine, should the other engine fail, as long as the TLA is in the TO detent or above and the APR has not been disabled by the crew.

The FADEC system monitors N_2 rpm of both engines. If the mismatch of N_2 speed exceeds 15%, the FADEC automatically increases the N_1 speed of the operable engine.

AUTOMATIC POWER RESERVE

When an engine fails, the automatic power reserve (APR) feature of the FADEC will automatically increase the thrust for the operating engine to the emergency thrust power setting of APR power.

Automatic Power Reserve is available when APR is armed during takeoff if the thrust levers are in the TO detent or above and if APR has not been disabled by the crew. On the approach, APR is armed for the go-around when in approach configuration (either engine is available, flaps greater than 20° , or the landing gear is down).

APR power for both engines can also be selected by advancing both thrust levers to the APR stop. A cyan APR icon appears to the right of each N_1 indicator.

ENGINE CONDITION AND FAULT REPORTING (ECFR)

An engine condition and fault reporting system is installed to provide monitoring of engine health. The system periodically records engine parameters and allows the crew to request that conditions be recorded at anytime. Use of the system entails downloading data from the FADEC for review by maintenance personnel. The data may be downloaded at anytime to assist in diagnosing engine problems which may be encountered. The ECFR is intended for maintenance functions and in-flight monitoring or diagnosis by maintenance personnel. The system is integrated into the FADEC of each engine.

ECFR EVENT SWITCH

The EVENT switch is located on the engine control panel. The switch allows the flight crew to manually initiate data collection to the ECFR.

ENGINE CONTROL SYSTEM (Cont)

THRUST CALCULATIONS

FADEC automatically computes a target thrust rating for thrust lever position and presents the target or maximum value on the N_1 indicator.

On the ground, normal rated takeoff thrust is automatically calculated when an engine is started. Normal rated N_1 takeoff rpm is continuously updated for changes in the Mach number, delta ambient temperature, and pressure altitude.

During the takeoff roll, the N_1 normal rated takeoff thrust value is continuously updated as the aircraft accelerates. At 65 kt discrete inputs for the thrust calculations are locked in. The calculation is unlocked when the aircraft altitude exceeds 400 ft. AGL or the thrust lever is retarded from the TO detent.

The cyan color target N_1 appears on the N_1 indicator as:

- N_1 caret (doughnut for cruise power)
- N_1 digital reference

-Thrust mode annunciation

THRUST MODE ANNUNCIATION

The thrust mode annunciation identifies the position of the thrust lever during most phases of operation or a specific armed condition.

With both engines operating, the following thrust mode annunciations are presented:

- APR
- TO
- CLB
- CRZ
- REV

MAX POWER (APR)

When either or both thrust levers are placed in the APR detent, the FADEC increases the engine thrust to automatic power reserve power (APR). The APR power setting is an emergency thrust setting.

To protect against inadvertent APR activation, the pilot must apply increased force to move the thrust lever forward to the APR detent.

APR thrust is indicated on the associated N_1 gauge by:

- Cyan caret
- Cyan N_1 digital reference
- Cyan APR icon

AUTO APR FUNCTION

- AUTO APR function indications are the same as APR indications. If the aircrew elects to disable the AUTO APR function, an AUTO APR OFF (S) CAS message is displayed and the AUTO APR OFF switch is illuminated.

NORMAL-RATED TAKEOFF N_1 INDICATIONS (TO)

Normal-rated takeoff thrust is automatically calculated by FADEC when electrical power is applied to the aircraft on the ground. Takeoff thrust is set on the takeoff roll by placing the thrust levers in the TO detent.

The programmed normal-rated takeoff thrust value is displayed on the MFD by the following indications:

- Cyan caret
- Cyan N_1 digital reference
- Cyan TO thrust mode annunciation for takeoff thrust

ENGINE CONTROL SYSTEM (Cont)

CLIMB THRUST (CLB)

When the thrust lever is placed in the CLB detent, the FADEC electronically programs the engine to accelerate or decelerate to the climb thrust setting.

The programmed climb thrust value is displayed on the MFD EICAS by the following indications:

- Cyan caret
- Cyan N_1 digital reference
- Cyan CLB thrust mode annunciation

CRUISE RANGE (CRZ)

Cruise power is unlike other thrust settings in that it is not associated with a thrust lever detent.

Cruise power is set by positioning the thrust lever in the quadrant range that exists between the IDLE and CLIMB detents. In this range, the pilot manually sets the thrust levers to maintain cruise speed or sets thrust for the descent and approach.

In cruise, FADEC does not set the cruise thrust to match the FADEC generated maximum cruise thrust target value. To distinguish maximum cruise power (CRZ) from other detent-related thrust settings, a cyan N_1 doughnut is used instead of a caret.

Maximum cruise power (CRZ) is indicated by the following:

- Cyan doughnut
- Cyan N_1 digital reference
- Cyan CRZ thrust mode annunciation

BLEED AIR EXTRACTION

When the thrust levers are in any of the detents and a new bleed air demand is placed on the engines, the N_1 target rpm may change to compensate for the new bleed-air demands.

N1 AND N2 SYNCHRONIZATION

DESCRIPTION

OFF, N1, or N2, is selected with the AUTO SYNC switch, located on the ENGINE control panel. When SYNC (N1 or N2) is selected, the two engines are synchronized if the thrust levers are in the CRZ or CLB setting.

COMPONENTS AND OPERATION

ENGINE SYNCHRONIZATION

When the AUTO SYNC selector switch is set to N1, the FADEC matches the fan speed of the slave engine to the speed of the master engine. The left and right engines will automatically designate themselves as master and slave engines using a cross-engine communication link. The engine with higher N1 compensation, or the left engine when N1 compensation of the two engines is the same, becomes the master engine. If the measured N1 or N2 of the slave engine is not within 5% of the master engine set point, the FADEC will provide an indication that synchronization is commanded but not achieved.

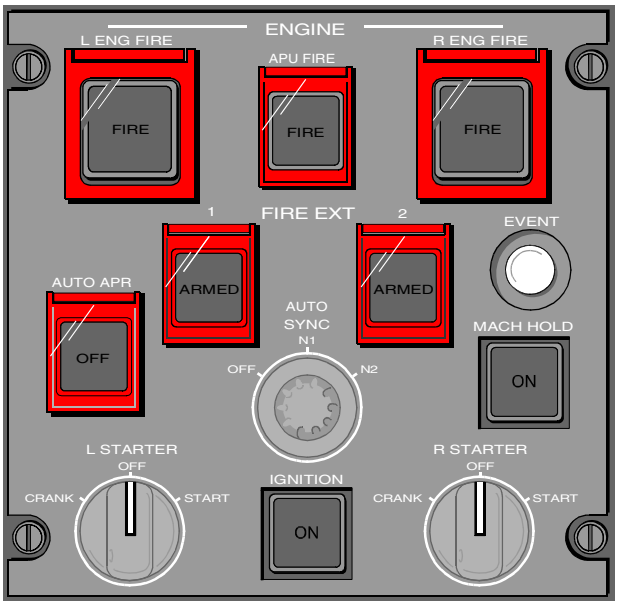

THRUST CALCULATIONS (Cont)

MACH HOLD

Mach hold is a function provided by FADEC that minimizes throttle movements over long periods during cruise. Limited adjustment is available to the master engine to hold the selected Mach. For MACH HOLD to be active, N_1 or N_2 must be synchronized, the aircraft trimmed for steady, level flight and the autopilot engaged in either Altitude Hold or Altitude Select (with altitude captured).

Mach Hold authority only allows N_1 to be adjusted within ± 3% N_1 for the thrust lever position at the time MACH HOLD is active. When active, a green MACH HOLD will be displayed between the N_1 indicators (on aircraft without SV 6.0 upgrade and FADEC V-10 software, the green light will flash momentarily, then extinguish). At authority limits, a white MACH HOLD is displayed .

ENGINE OIL SYSTEM

DESCRIPTION

The engine oil system provides cooling and lubrication for all of the engine bearings, gears and splines. It also provides fuel heating and shaft vibration damping (through the use of hydraulic mounts). The engine oil sump venting and breather system is also integral to the overall lubrication system.

COMPONENTS AND OPERATION

Oil is supplied to the engine by the oil pump that draws hot oil from the accessory gear box (AGB) oil tank. The oil is filtered and cooled in the fuel heater/oil cooler (FHOC) prior to flowing into the engine bearing sumps. In the engine bearing sumps (forward and aft) and in the AGB, the oil lubricates the bearings, seals, and gears and cools them by absorbing heat directly as it passes in and around these components.The oil is scavenged by dedicated scavenge pumps and returned to the oil tank. Power to drive the oil pump is provided by the compressor spool trough the AGB.

An oil filter bypass valve and an impending bypass switch are located in parallel with the filter. The switch provides a warning when the filter becoming clogged and the pressure drop across it reaches 45 psi, indicating that impending bypass is imminent. The bypass valve opens at 65 psi. The ECU monitors the switch and the oil temperature, and provides an indication of impending filter bypass to the cockpit when the switch is open and oil temperature is in the normal operating range. During bypass mode, the system still provides a minimum filtration level by means of an accessible last chance screen. Once the impending bypass warning has been indicated, the CAS message remains illuminated during the bypass mode and logged by the FADEC to direct maintenance action prior to the next flight. Before oil is returned to the oil tank it flows across the chip detector in the AGB housing. The chip detector is linked to the ECU to provide an indication on the EICAS. Chip detector and impending oil filter bypass advisory CAS messages are presented as L (R) ENGINE OIL CHIP and L (R) ENGINE OIL BYPASS.

ENGINE OIL PRESSURE INDICATIONS

To provide system redundancy, a pressure switch and separate pressure transmitter are used to monitor the engine oil pressure. When low oil pressure is detected by the pressure switch, a L (R) ENG OIL PRESS LOW (W) is presented. Excessively high oil pressure is indicated by a L (R) ENG OIL PRESS HIGH (C). An imminent bypass of the oil filter is annunciated by a L (R) ENGINE OIL BYPASS (A) CAS message.

ENGINE OIL SYSTEM (Cont)

ENGINE OIL LEVEL AND REPLENISHMENT SYSTEM

The engine oil servicing doors are located on the forward and left side of each engine nacelle. Oil quantity may be checked by a sight gage on the AGB and replenished through the oil filler port. The gage bands are marked FULL, ONE LOW, and NO DISPATCH. However, the primary means to check oil on the Challenger 300 is with the Remote Oil Level Sensor (ROLS). Oil levels are transmitted by the ARINC 429 bus to the refuel/defuel panel located in the right wing root fairing.

Wait at least 15 minutes, but not more than 1 hour following engine shutdown before checking the oil using ROLS, and service the tank if more than one quart (0.95 liter) low. Each engine oil tank capacity is 7.8 quarts (7.4 liters), while the oil volume at the FULL mark is 5.7 quarts (5.4 liters). The ONE LOW band indicates when the tank is approximately 1 quart below FULL. The NO DISPATCH band is approximately 1.6 quarts below FULL. If the oil level is *below* this band, the tank should be serviced prior to dispatch. However, if the oil level is within the band, the engine can be operated at least 10 hours without servicing the tank. The 10 hour time frame assumes a maximum engine oil consumption rate. Note that the oil volume is less than the total tank volume of 7.8 quarts (7.4 liters). The total tank volume design accounts for hot oil volume expansion and for the additional volume between the sight gage FULL mark and the fill-to-spill level.

NOTE: The oil level indication lights on the refuel defuel panel are for reference only. If the CHECK OIL light on the refuel defuel panel is illuminated, visually check the oil tank sight glass for dispatch ability.

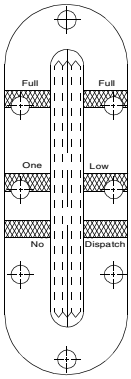

CFO1801002_020

ENGINE NACELLE OIL LEVEL SIGHT GAGE

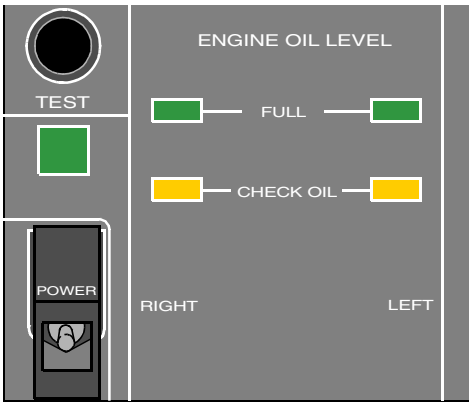

REFUEL DEFUEL CONTROL PANEL

ENGINE OIL TEMPERATURE

Excessively high engine oil temperatures are displayed as L (R) ENG OIL TEMPERATURE HIGH (C) CAS message.

ENGINE OIL SYSTEM (Cont)

ENGINE LUBRICATION SCHEMATIC

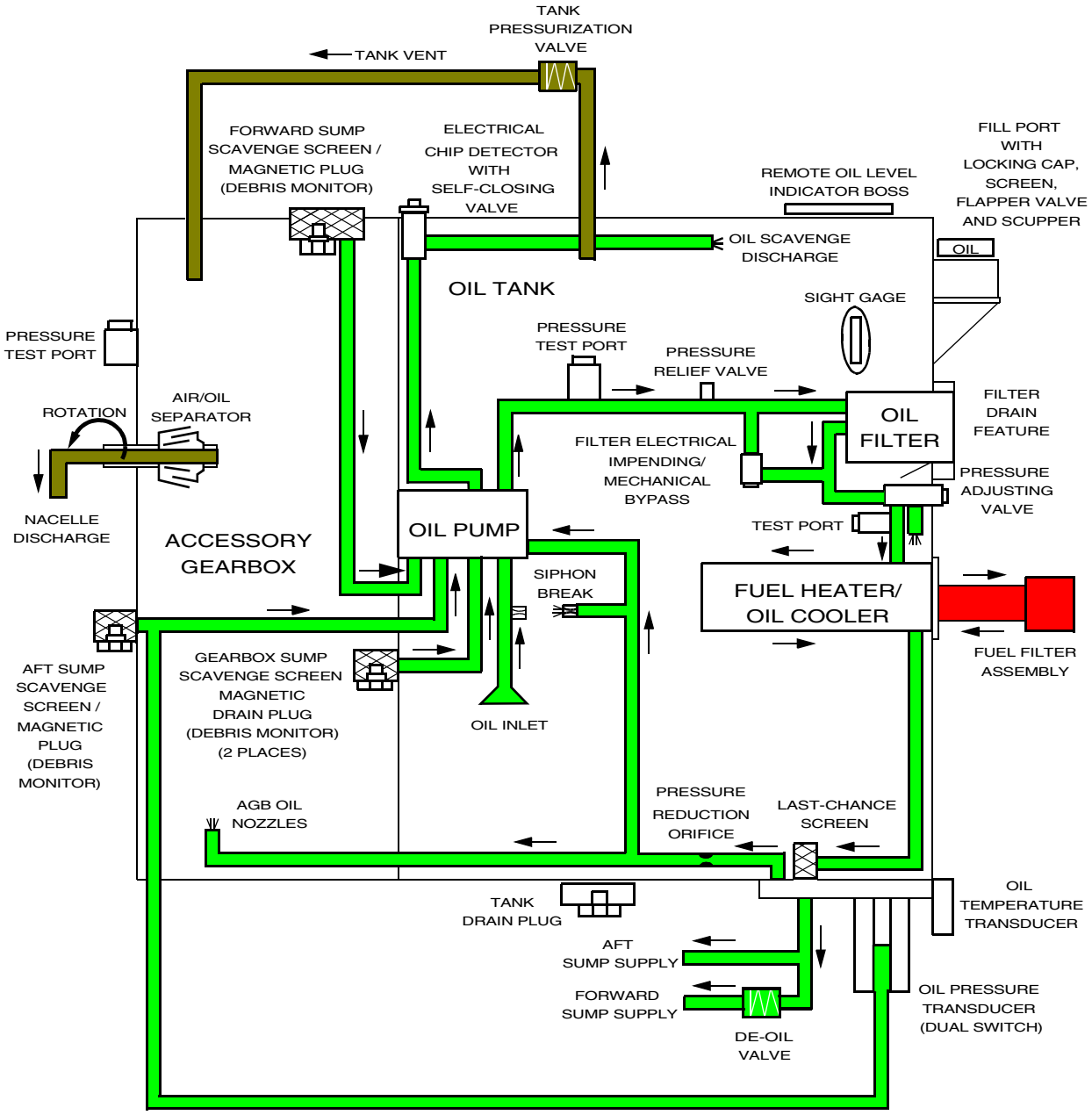

ENGINE BLEED AIR SYSTEM

DESCRIPTION

The engine bleed air system provides intermediate pressure (IP) air to the environmental control system and the opposite engine air turbine starter. It provides high pressure (HP) air to the wing and engine anti-icing systems.

The integrated air system management controller (IASC) controls bleed-air extraction from the engines. IASC 1 supports L BLEED and IASC 2 supports R BLEED functions.

Bleed-air is also extracted from the compressor by the surge bleed valves to regulate airflow through the engine core and is controlled by the FADEC.

L and R bleed-air selection, ON or OFF, is accomplished via the AIR COND/BLEED panel on the center pedestal. A cross-bleed valve is installed between the left and right pneumatic ducts, that can be opened automatically or manually by pressing the XBLEED push button, to provide bleed-air for engine starting. The APU is the normal source of bleed-air that is used for engine starting.

COMPONENTS AND OPERATION

Engine bleed-air components consists of a bleed duct, intermediate pressure valve (IPV) and intermediate check valve.

Engine bleed-air duct assembly directs compressor bleed-air to the common bleed manifold that is located in the aft equipment bay. The engine compressor supplies bleed-air to operate the aircraft pneumatic system.

The nacelle bleed-air ducts are monitored for bleed-air leakage by the engine fire detection system.

Refer to Chapter 2, *Air Conditioning and Pressurization*, and Chapter 14, *Ice and Rain Protection* for more discussion on the bleed air system.

ENGINE STARTING SYSTEM

DESCRIPTION

The AS907-1 turbofan engine is equipped with an air turbine starter (ATS) and starter control valve. The start system is designed to achieve assisted ground starts, assisted inflight starts, and windmill inflight starts. Assisted starting can be accomplished with bleed air from the APU, an adjacent engine, or ground power. The engine also has an auto ignition function, which automatically provides ignition in the event of a stall, combustor blowout, or momentary loss of fuel. The starting system is used to accelerate the N_2 high pressure section of the engine to a speed at which combustion light-off and self sustaining rpm occurs. Placing the engine run switch to RUN turns on the aircraft electrical boost pump. The START switch signals the FADEC to initiate the start sequence.

DC electrical power and air from the bleed-air manifold are required to open the start valve and engage the air turbine starter. The bleed-air manifold can be pressurized by the:

- APU bleed air
- Ground cart HP bleed air
- Opposite engine bleed air (crossbleed)

The pneumatic pressure from any of the three pneumatic sources is displayed on the ECS synoptic page.

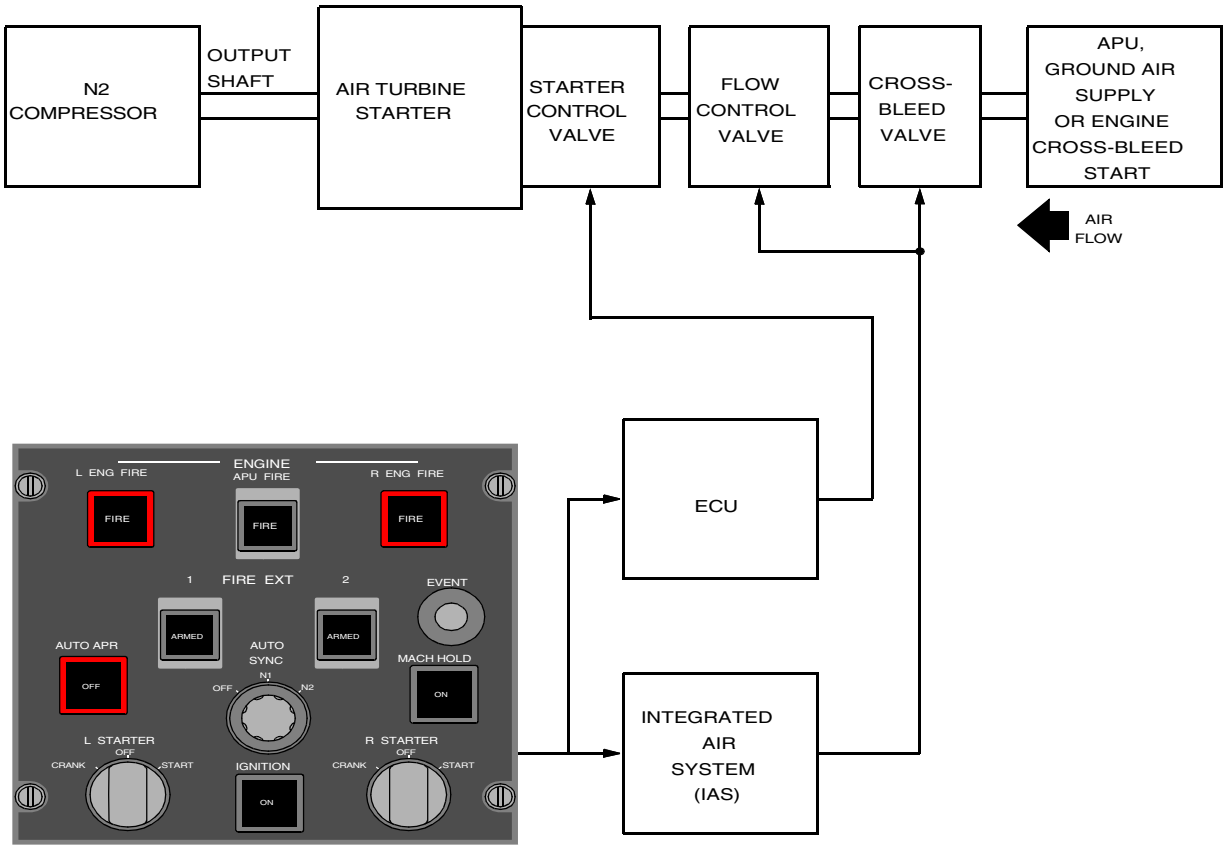

ENGINE CONTROL PANEL

CFO1801002_018

ENGINE STARTING SYSTEM (Cont)

COMPONENTS AND OPERATION

STARTER CONTROL VALVE

The starter control valve is mounted adjacent to the air turbine starter (ATS) inside the engine nacelle. The valve normally requires 28 VDC power and pneumatic pressure to open. When the L (R) starter switch on the ENGINE control panel is moved to the START position, the FADEC supplies 28 VDC power to energize the solenoid. This allows pneumatic pressure to open the valve and engage the air turbine starter.

When N_2 rpm is > 50%, the FADEC removes power from the solenoid, the start valve closes and the air turbine starter disengages.

AIR TURBINE STARTER (ATS)

The air turbine starter is mounted on the accessory gearbox. The ATS converts pneumatic energy into mechanical motion. The starter, through a sprag clutch, mechanically engages the accessory gearbox and assists in accelerating the engine to idle speed. During the start sequence, the start valve closes and the ATS disengages when the N_2 reaches or exceeds 46.2% or the OFF position is selected on the throttle quadrant assembly panel.

For subsequent starts, the starter sprag clutch does not require that the engine rotation be completely stopped before engaging the starter. The ATS may be engaged at any rpm up to 50% rpm (starter cutout speed).

START SEQUENCE

Each engine has a set of L (R) STARTER switches on the ENGINE control panel and a set of RUN/OFF switches on the throttle quadrant panel.

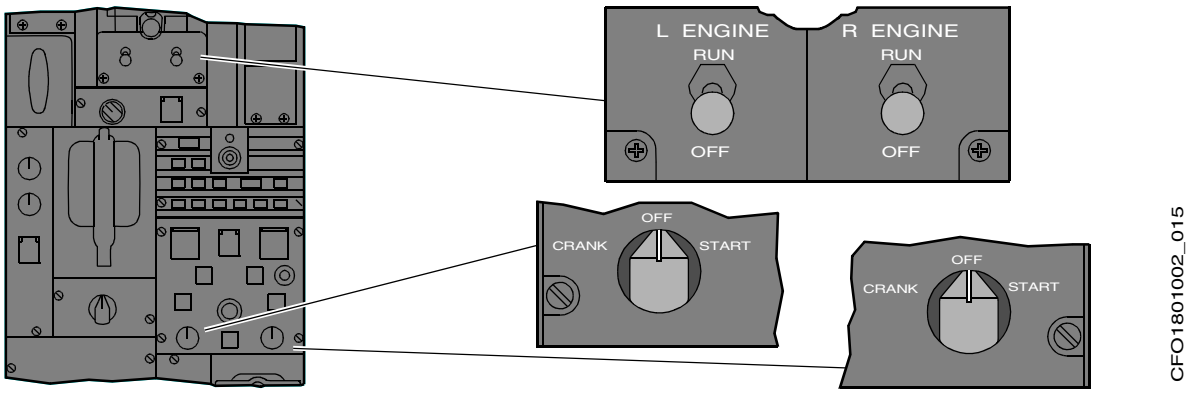

To start the engines, set the related engine switch to RUN. This turns on the fuel DC boost pump and operates the ECU start cycle. Set START switch to the START position and hold it for one second to operate the usual ground or air start.

When the applicable engine RUN position is selected on the TQA and the starter switch is set to START the:

- The start valve on the associated engine opens to allow pressure from the bleed air manifold to engage the ATS

When the engine's N_2 reaches 46.25%, the:

- The start valve closes and the ATS disengages

If the start valve fails to close after achieving 50% N_2, a L (R) STARTER FAIL ON (C) CAS message is shown

Refer to the *Airplane Flight Manual* for starter limits.

ENGINE STARTING SYSTEM (Cont)

ENGINE MOTORING

Dry motoring is accomplished by toggling the start switch from OFF to CRANK and hold for the duration of the cranking. Dry motoring may become necessary to cool the engine when restarting the engine immediately after shutdown.

Wet motoring is accomplished by setting the RUN/OFF switch to RUN, toggling the start switch from OFF to CRANK and holding the latter for the duration of cranking. In response, the ECU energizes the air turbine starter control valve, controls the run solenoid, and controls the fuel metering valve per the start sequence.

A dry motoring follows the wet motoring start. Dry motoring is used to clear any pools of fuels that may have collected in the engine during the wet motoring.

IGNITION SYSTEM

DESCRIPTION

The ignition system consists of an ignition exciter, two igniter plugs, and two sets of igniter leads. The ignition system for each engine is a dual independent and redundant system. The ECU will activate the ignition system during automatic starts and restarts. The ECU will also automatically turn the ignition system off when the engine is running. The pilot can manually activate the ignition system by turning on the IGNITION switch.

For automatic ground starts, the ECU uses one ignition channel, changing the channel used on each start. For all other starts, both ignition channels are used simultaneously. The system is capable of continuos operation by manual activation by the pilot, but is normally only energized during the starting sequence.

COMPONENTS AND OPERATION

ENGINE STARTING

When the FADEC in-control channel is determined during N_2 spool-up, the in-control channel closes the associated ignition relay. When the applicable L (R) ENGINE RUN switch is selected, the FADEC selected dc powered ignition exciter is energized. Ignition is de-energized by the FADEC at starter cutout.

AERODYNAMIC STALL

At an excessively high angle of attack (AOA), there is a possibility that turbulent airflow from the wing root could disrupt the flow of air into the engine intake. Disruption of airflow at the intake could lead to engine compressor stall. The FADEC and the stall protection computer provide two levels of compressor stall protection.

As the aircraft angle of attack reaches the stick shaker firing angle, the stall protection computer signals the FADEC to energize both ignition channels.

If the FADEC detects a compressor stall or surge, the FADEC will modulate engine thrust to clear the event.

FLAMEOUT PROTECTION

If the FADEC detects an engine flameout, it will automatically initiate a re-light. Both ignitions systems are energized.

An engine flameout is detected when the following occurs:

- The engine is subidle and either the ITT rate of change is negative, or the N_2 rate of change is lower than commanded
- A flameout is detected while the engine RUN/OFF switch is still in the RUN position
- The L (R) ENGINE FLAMEOUT (C) CAS message is illuminated

When the affected engine's ENGINE RUN switch is placed in the OFF position, the L (R) ENGINE FLAMEOUT caution message is replaced by the L (R) ENGINE SHUTDOWN (S) message.

THRUST LEVERS

DESCRIPTION

The thrust lever quadrant contains the thrust levers, thrust reverse finger lifts, microswitches and internal locks and stops necessary to control the engines in forward and reverse thrust.

COMPONENTS AND OPERATION

THRUST LEVERS

Thrust lever quadrant settings are MAX REV, REV, IDLE, CLB, TO, and APR. In addition, the range of movement of the thrust lever between IDLE and CLB is defined as the cruise range.

The thrust levers incorporate both mechanical stops and soft detents.

Self-centering soft detents prevent the thrust levers from moving inadvertently.

FRICTION KNOB

A friction knob allows the pilot to change the friction setting for the thrust levers.

THRUST LEVER POSITION MEASUREMENT

Actual thrust lever positions are electrically measured by rotary variable differential transformers (RVDTs) or sensed by micro switches that are housed within the thrust quadrant. The information is provided to the FADEC, the flight control computers (FCC) and to the data concentrator units (DCU). Other aircraft systems are influenced by thrust lever position are as follows:

- Landing gear warning system
- Takeoff configuration warning system
- Cabin pressurization
- Ground spoilers

TAKEOFF AND GO-AROUND (TOGA)

Takeoff and go-around (TOGA) switches are included in each thrust lever. When pressed, the TOGA switch signals the flight control computers to modify flight director commands and the FMS position is updated through the flight management computer(s).

THRUST REVERSE LEVERS

The thrust levers are linear throttles, which means that reverse thrust is not modulated by use of piggyback levers, instead, the thrust reverser levers are lifted above a gate, which allows the thrust lever itself to translate aft to modulate the reverse thrust level. The reverse thrust setting is for ground use only.

THRUST LEVERS (Cont)

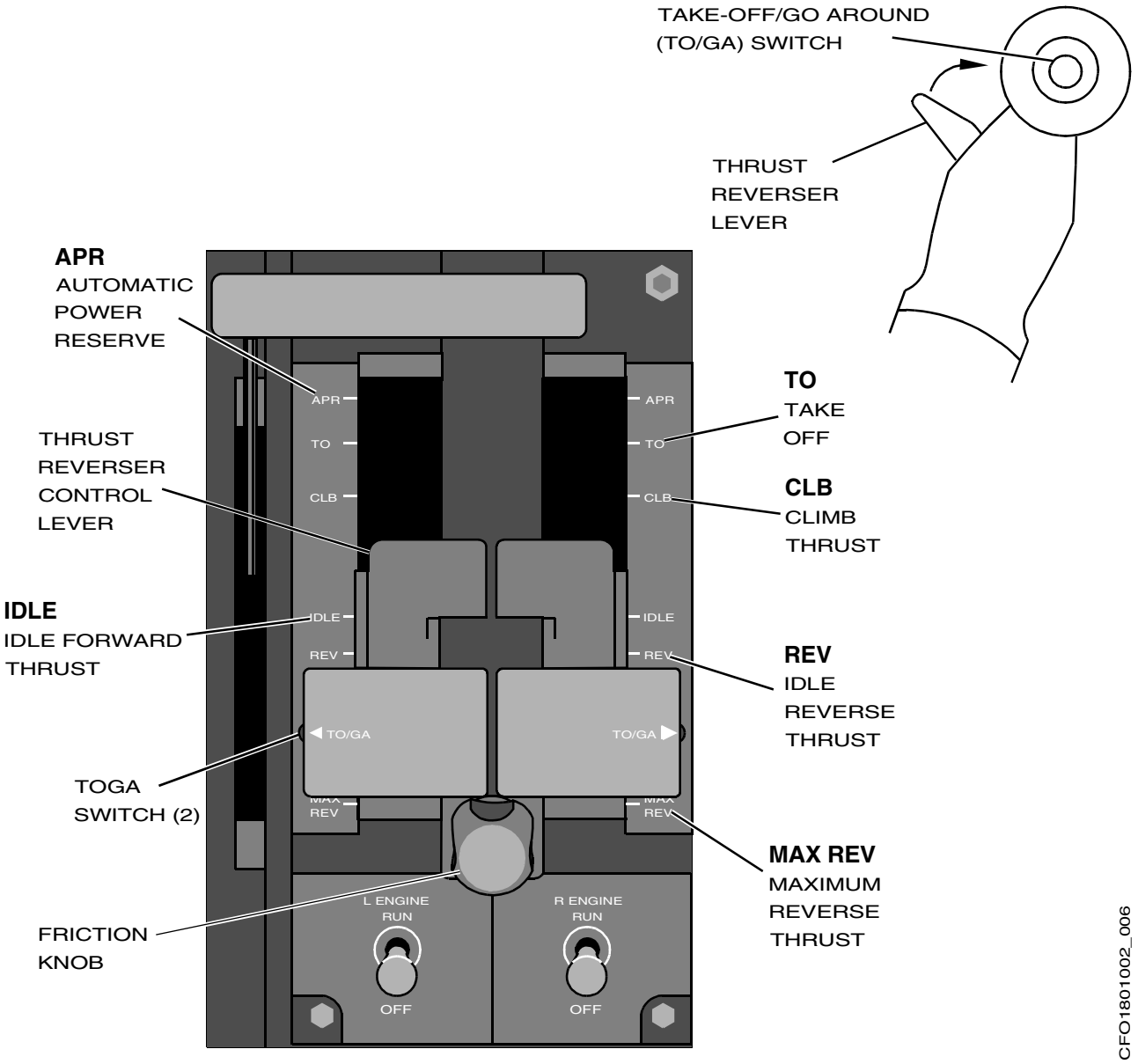

THRUST REVERSER SYSTEM

DESCRIPTION

The thrust reversers help stop the aircraft on landing and during a rejected takeoff (RTO). The system is operable on the ground only; the reversers will not deploy in flight.

COMPONENTS AND OPERATION

THRUST REVERSER

The thrust reverser is powered by the left hydraulic system for the left reverser and the right hydraulic system for the right reverser and is controlled by the FADEC and electrical signals from the airplane.

The hydraulic system has:

- Isolation control unit
- Directional control unit
- Hydraulic and electro-hydraulic primary locks
- Door actuators
- Tertiary actuator locks

The electrical system comprises:

- Isolation control unit inhibition switch
- Stow switches — two per door, signal feedback to the FADEC
- Deploy switch — one per door, signal feedback to the FADEC
- Maintenance test switch — allows thrust reverser operation without engine operating

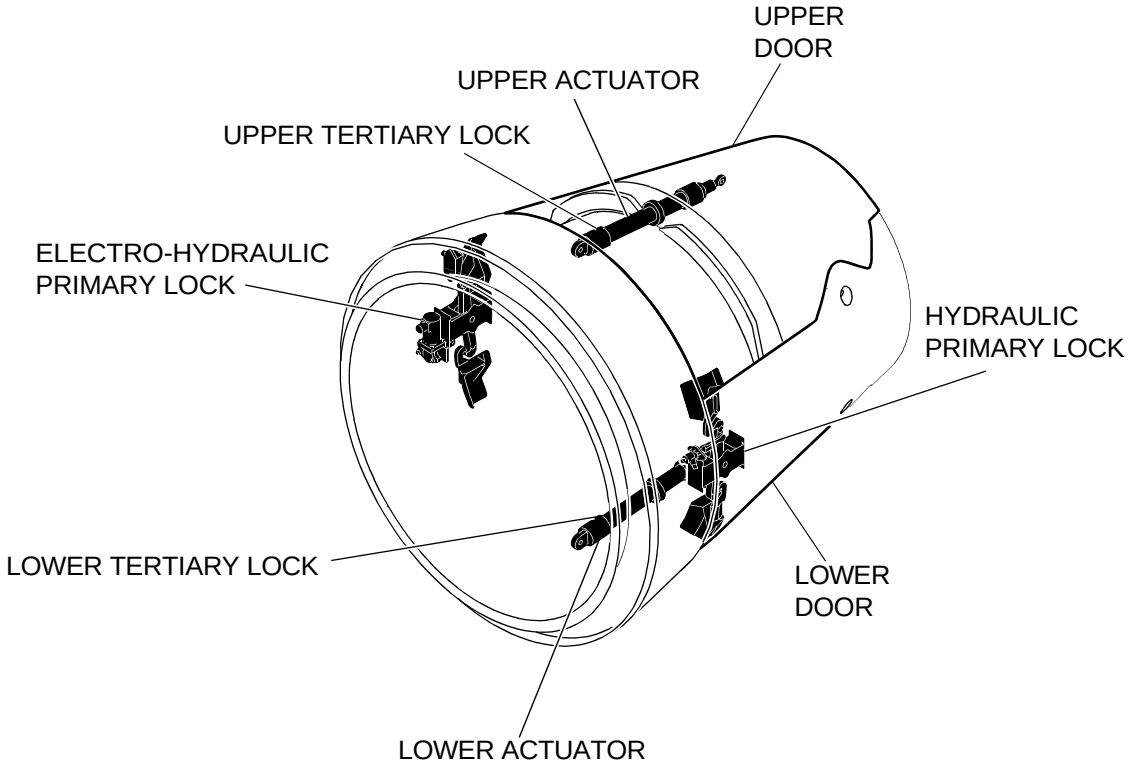

THRUST REVERSER SYSTEM (Cont)

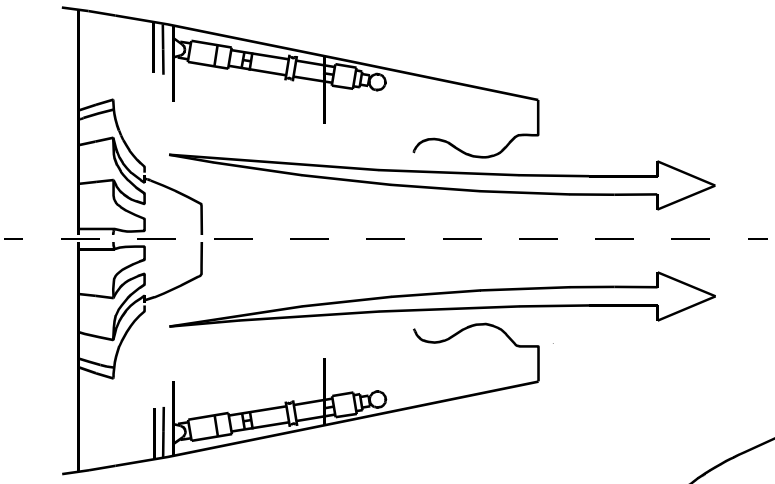

THRUST REVERSER STOWED FORWARD THRUST

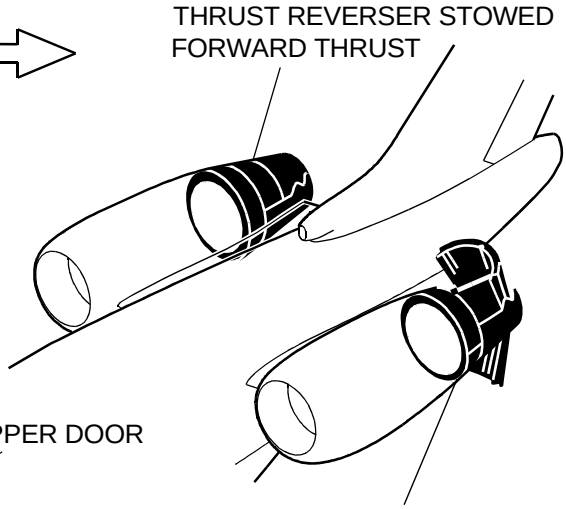

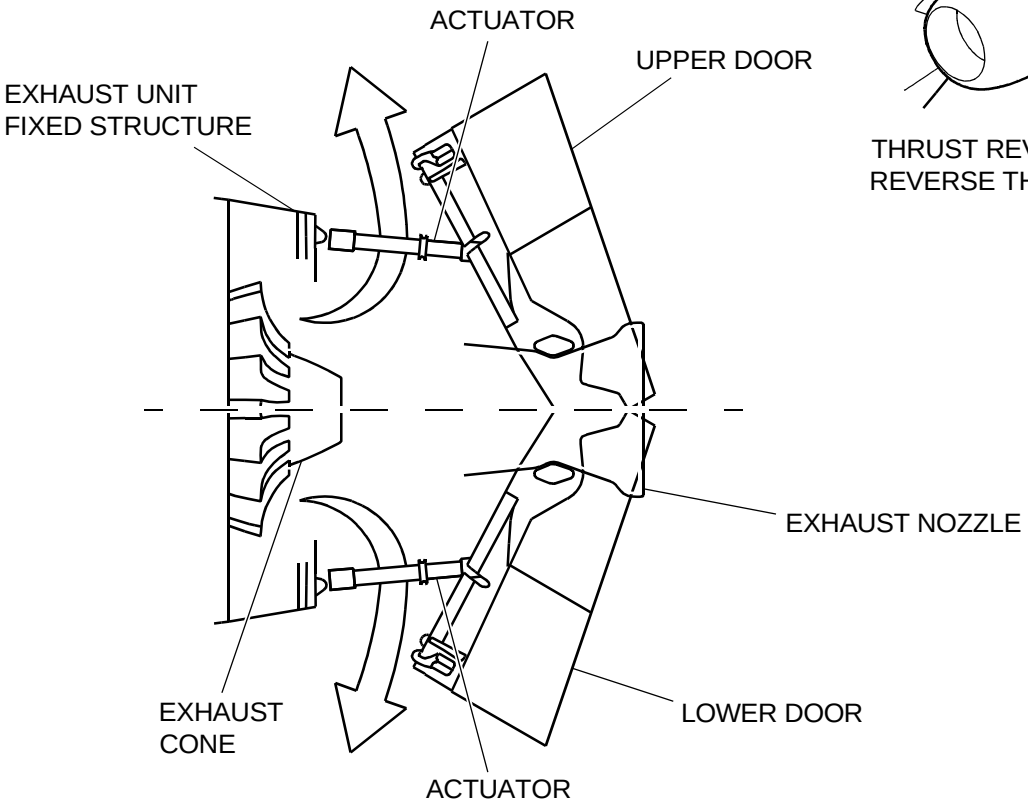

THRUST REVERSER DEPLOYED REVERSE THRUST

CFO1801002_010

THRUST REVERSER SYSTEM (Cont)

REVERSE THRUST OPERATION

When reverse thrust is desired, the thrust levers are drawn aft to the IDLE position, where the thrust reverser levers may be lifted, thus allowing the main thrust levers to be pulled further rearward to the REV soft detent. This rearward movement signals the FADEC (via the RVDTs) and the thrust reversers (via the microswitches in the TQA) that thrust reverser deployment has been commanded. Once in the REV detent, it is unnecessary to hold the thrust reverse levers up, as they stay in place until the pilot selects forward operation. Interlock balks will prevent movement of the levers rearward beyond REV until the thrust reverser deploy switches provide feedback that the thrust reverser doors are fully deployed. During the deployment sequence, a white REV icon is displayed on the EICAS, and N_1 target and bug are removed from the display. Once the doors are fully deployed, the REV icon changes to a green color, and the interlock baulk is released. This will allow for thrust lever modulation between the REV and MAX REV positions. N_1 target and bug are set to the maximum reverser N_1 setting.

To stow the thrust reversers, the main thrust levers are moved forward to the IDLE position. As the lever move between the REV and IDLE positions, the thrust reverser levers will return to their forward thrust position. Interlock balks will prevent movement of the main thrust levers forward beyond IDLE until the thrust reverser stow switches provide feedback that the doors have completely closed. During the stow phase, the REV icon will go from green to white, and the N_1 target and bug are removed from the display. Once the doors are fully stowed, the REV icon will disappear, and the N_1 target and bug will reset to the takeoff setting. Also, the forward interlock baulk will be removed, allowing for forward thrust modulation above idle thrust.

Thrust reverser operation of each engine is independent of the other engine. If the FADEC senses that a thrust reverser door is unlocked in flight, the FADEC will limit engine thrust to idle, irrespective of thrust lever position. It will also post a L (R) REVERSER UNSAFE (W) CAS message. If the main thrust levers are pulled rearward to the REV position when the aircraft is not on the ground (no WOW or wheel spinup signal), the doors will not be unlocked, and an amber REV icon is illuminated inside the N_1 display. This caution signal is removed if the levers are restored to IDLE or forward while in the air.

ISOLATION CONTROL UNIT

The isolation unit controls the hydraulic system pressure to the thrust reverser system.

DIRECTIONAL CONTROL UNIT

The directional control unit controls hydraulic pressure to the upper and lower door actuators to deploy force.

A pressure switch sends a signal to the directional control unit. The directional control unit control also sends a signal to the upper and lower door actuators causing an overstow of the thrust reverser doors to enable unlatching of the primary locks.

The unit contains a directional control valve that is controlled by a solenoid valve. The solenoid valve is controlled from thrust lever microswitches, WOW and wheel spinup signals. When the solenoid is energized, a deploy valve opens allowing hydraulic pressure to sequentially release the two primary locks.

Through the WOW or wheel spinup signal, two tertiary locks (prevents uncommanded thrust reverser deployment) release and allows the directional control valve to the deploy position.

As the aircraft decelerates, the maximum N_1 is reduced which limits thrust reverser authority and also helps prevent thrust reverser controllability problems.

VIBRATION MONITORING SYSTEM

DESCRIPTION

The vibration sensor is a self-generating velocity pickup design that outputs a voltage signal proportional to velocity. The signal is shared by both ECUs and annunciated in the cockpit.

COMPONENTS AND OPERATION

VIBRATION MONITORING SYSTEM

The powerplant fan assembly is continuously monitored for vibration. There is a vibration pickup on each engine, to provide feedback to the aircrew which engine is producing high vibration levels. It is also used by maintenance personnel for ground based fan trim balancing. A L (R) ENGINE VIBRATION (C) CAS message is illuminated and a VIB icon is displayed on the MFD. If there is a loss of vibration signals from the affected engine(s), a L (R) ENGINE VIB FAIL (A) is displayed as a CAS message.

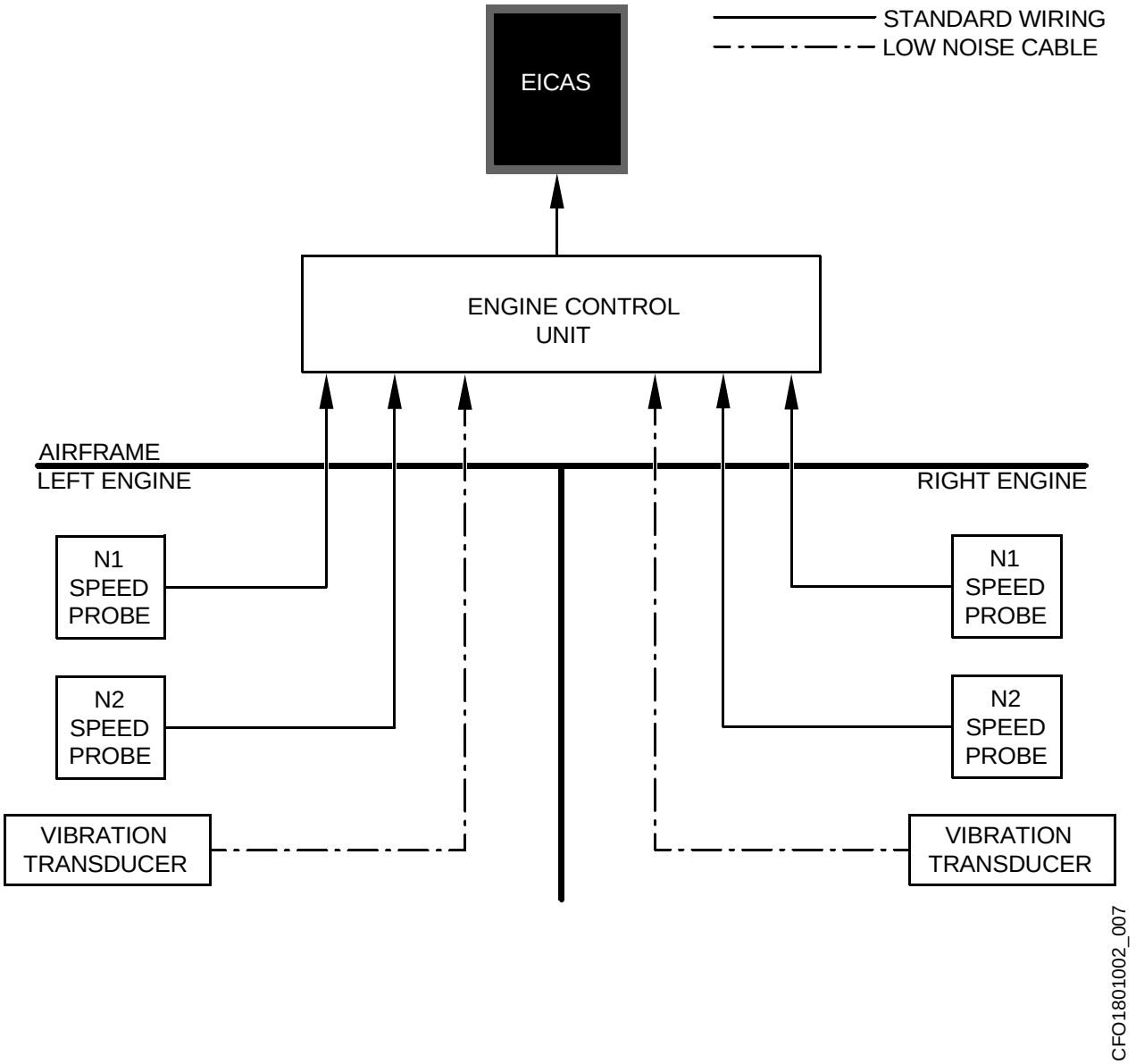

CONTROLS AND INDICATIONS

DESCRIPTION

The thrust levers control the application of forward and reverse thrust.

TOGA switches provide data for other operating systems.

The ENGINE panel provides switches to control engine starts, continuous ignition, Mach hold, engine synchronization, disabling of the auto APR function, as well as fire extinguishing.

Engine-operating parameters are presented on the EICAS display. Indications include N_1 and N_2 (in percent values), as well as ITT, fuel flow, oil pressure and temperature, ignition system and start status, high engine vibration levels, thrust reverser use, as well as the selection of engine synchronization and mach hold.

THRUST LEVER QUADRANT AND ENGINE CONTROL PANEL

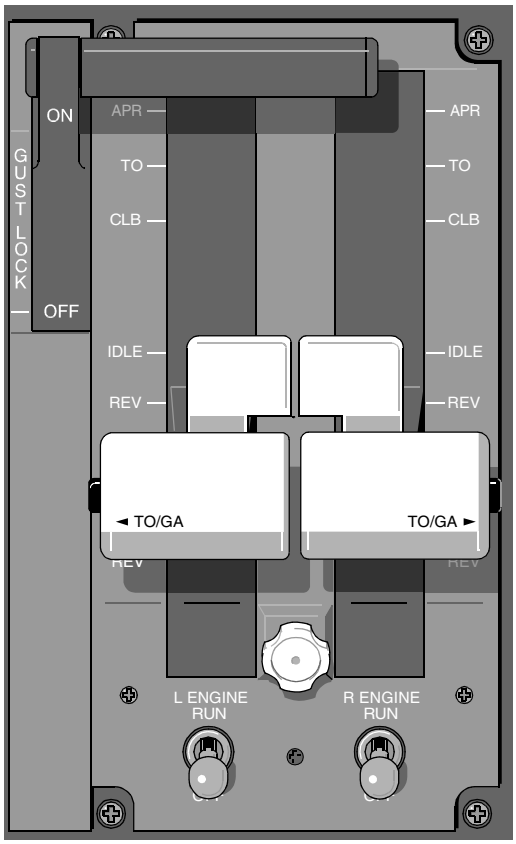

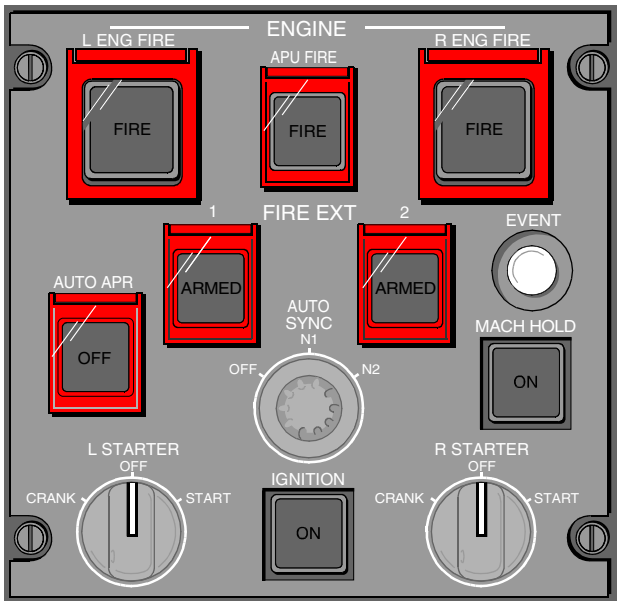

CFO1801002_023

CONTROLS AND INDICATIONS (Cont)

ENGINE START CONTROLS

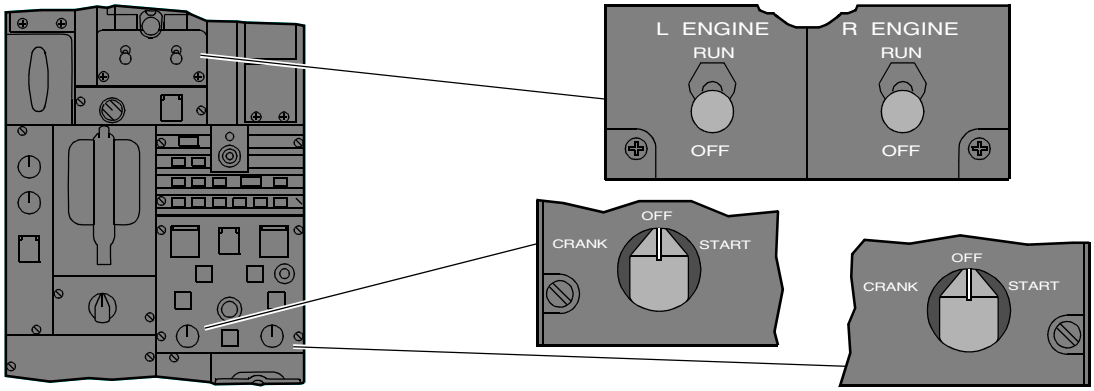

AIR COND/BLEED CONTROL PANEL

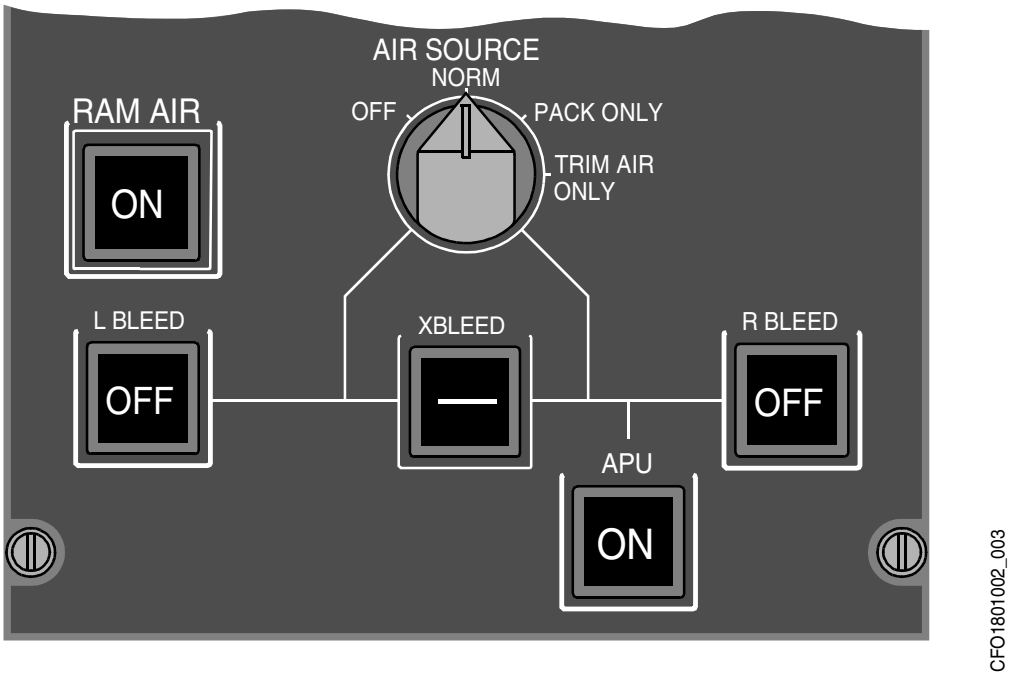

EICAS DISPLAY

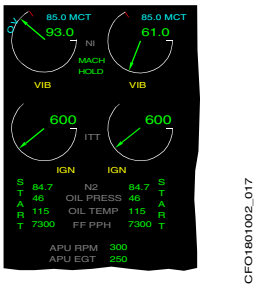

EICAS MESSAGES

The powerplant messages are shown on the EICAS. In the table below are the powerplant messages, meanings, inhibits, and aural warnings along with a brief explanation of each message.

MESSAGE	INHIBITS	MEANING	AURAL WARNING
L (R) ENGINE EXCEEDANCE		The respective engine has exceeded a speed or temperature limit	
L (R) ENGINE FIRE		The L (R) ENGINE FIRE CAS, FIRE EI in the N1 indicator, FIRE indication in the L(R) ENG FIRE switch, or “LEFT (RIGHT) ENGINE FIRE’ voice message indicates that the engine fire detection loop has activated. An engine fire is usually accompanied by other indications, such as: excessive ITT, erratic or rough engine operation, fluctuating engine indications, or smoke in the cabin.	“Left (Right) Engine Fire”
L (R) ENG OIL PRESS LOW	TO/LAND	The respective engine oil pressure is low	
L (R) REVERSER UNSAFE		Illumination of either the L or R REVERSER UNSAFE CAS, or a REV EI indicates an unsafe thrust reverser condition. The affected engine should automatically decelerate to idle. The autostow function will attempt to stow the reverser doors	
L (R) ENGINE FLAMEOUT		The respective engine has had a flameout	
ENGINES FUEL BYPASS	TO/LAND	Both engine fuel filters are impending bypass	
L (R) ENG OIL TEMP HIGH	TO/LAND	The respective engine oil temperature is high	
L (R) ENG ANTI-ICE FAIL	TO/LAND	The respective engine anti-ice has failed	
L (R) ENG DSPL MISCOMP	TO/LAND	The respective engine N_1 or ITT display does not agree with the other N_1 or ITT display	
L (R) ENG FUEL SOV FAIL	TO/LAND	The respective engine fuel shutoff valve has failed to close when commanded	
L (R) ENG OIL TEMP HIGH	TO/LAND	The respective engine oil pressure is low	
L (R) ENG OIL PRESS HIGH	TO/LAND	The respective engine oil pressure is high	
L (R) ENGINE VIBRATION	TO/LAND	A higher than normal level of vibration has been sensed in the respective engine	

MESSAGE	INHIBITS	MEANING	AURAL WARNING
L (R) FADEC FAIL	TO	Major control system failure affecting both channels of the respective FADEC. The engine may shutdown or got to idle, or engine operation may be degraded. Failure of the control system may cause control effect, performance degradation or a loss of a protective system	
L (R) REVERSER FAIL	TO	The respective thrust reverser has failed	
L (R) START ABORTED	TO/LAND	The ground engine start on the respective engine has been aborted	
L (R) STARTER FAIL	TO/LAND	The respective engine starter has failed	
L (R) STARTER FAIL ON	TO/LAND	The respective engine starter has failed ON	
DOWNLOAD FADEC	TO/LAND	The FADEC maintenance data should be downloaded	
ENG SYNC/M-HOLD FAIL	TO/LAND	Engine SYNC and Mach hold are not available	
L (R) ENG A/ICE FAIL ON	TO/LAND	The respective nacelle anti-ice has failed ON	
L (R) ENG FUEL TEMP LOW	TO/LAND	The fuel temperature in the respective engine filter is low	
L (R) ENG IGN FAUL	TO/LAND	A fault has been detected in the respective engine ignition	
L (R) ENG THRUST FAULT	TO/LAND	A fault has been detected in the respective engine thrust	
L (r) ENGINE FAULT	TO/LAND	A fault has been detected in the respective engine	
L (R) ENGINE FUEL BYPASS	TO/LAND	The respective engine fuel filter is impending bypass	
ENG MACH HOLD FAIL	TO/LAND	The Mach hold function has run out of authority	
L (R) ENGINE MINOR FAULT	TO/LAND	The engine has detected a minor engine fault	
L (R) ENGINE OIL BYPASS	TO/LAND	The respective engine oil filter is impending bypass	
ENGINE SYNC FAIL	TO/LAND	The engine sync mode has failed	
L (R) ENG VIBRATION FAIL	TO/LAND	Loss of vibration signal from affected engine	

MESSAGE	INHIBITS	MEANING	AURAL WARNING
L (R) ENGINE ANTI-ICE FAULT	TO/LAND	Anti-ice bleed over-pressure detection, may result in higher ITT than normal	
L (R) ENGINE OIL CHIP	TO/LAND	Metal debris detected in engine lube system	
AUTO APR OFF		Auto APR has been selected off	
L (R) ENGINE SHUTDOWN		The respective engine has shutdown with the RUN switch OFF or the respective FIRE switch pushed	
L (R) REVERSER INOP		The respective thrust reverser is inoperative and is mechanically pinned, hydraulically and electrically isolated	