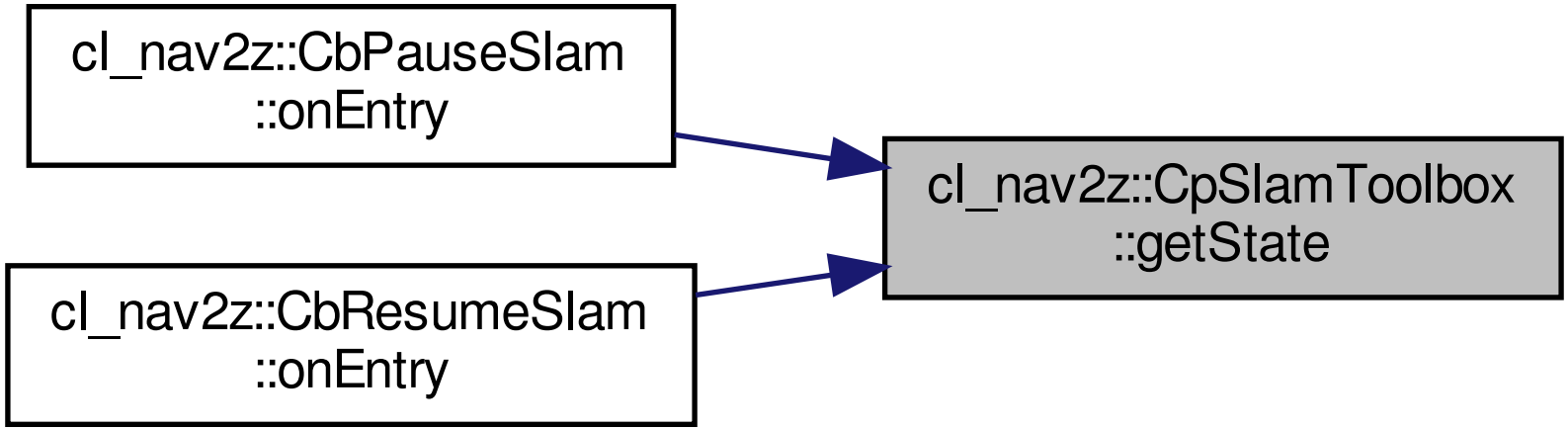
cl_nav2z::CbPauseSlam
::onEntry
cl_nav2z::CbResumeSlam
::onEntry
cl_nav2z::CpSlamToolbox
::getState