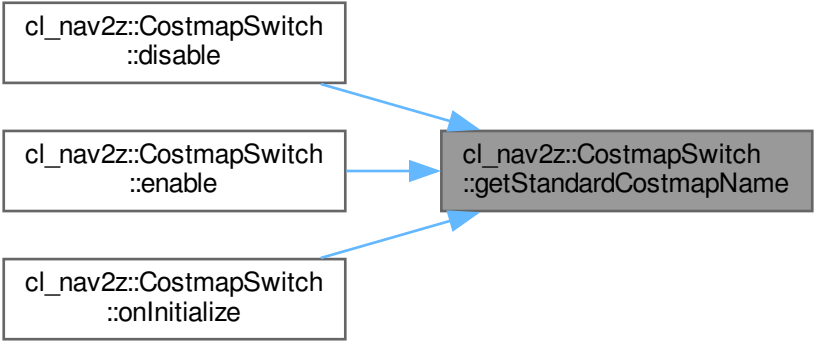
cl_nav2z::CostmapSwitch
::disable
cl_nav2z::CostmapSwitch
::enable
cl_nav2z::CostmapSwitch
::onInitialize
cl_nav2z::CostmapSwitch
::getStandardCostmapName