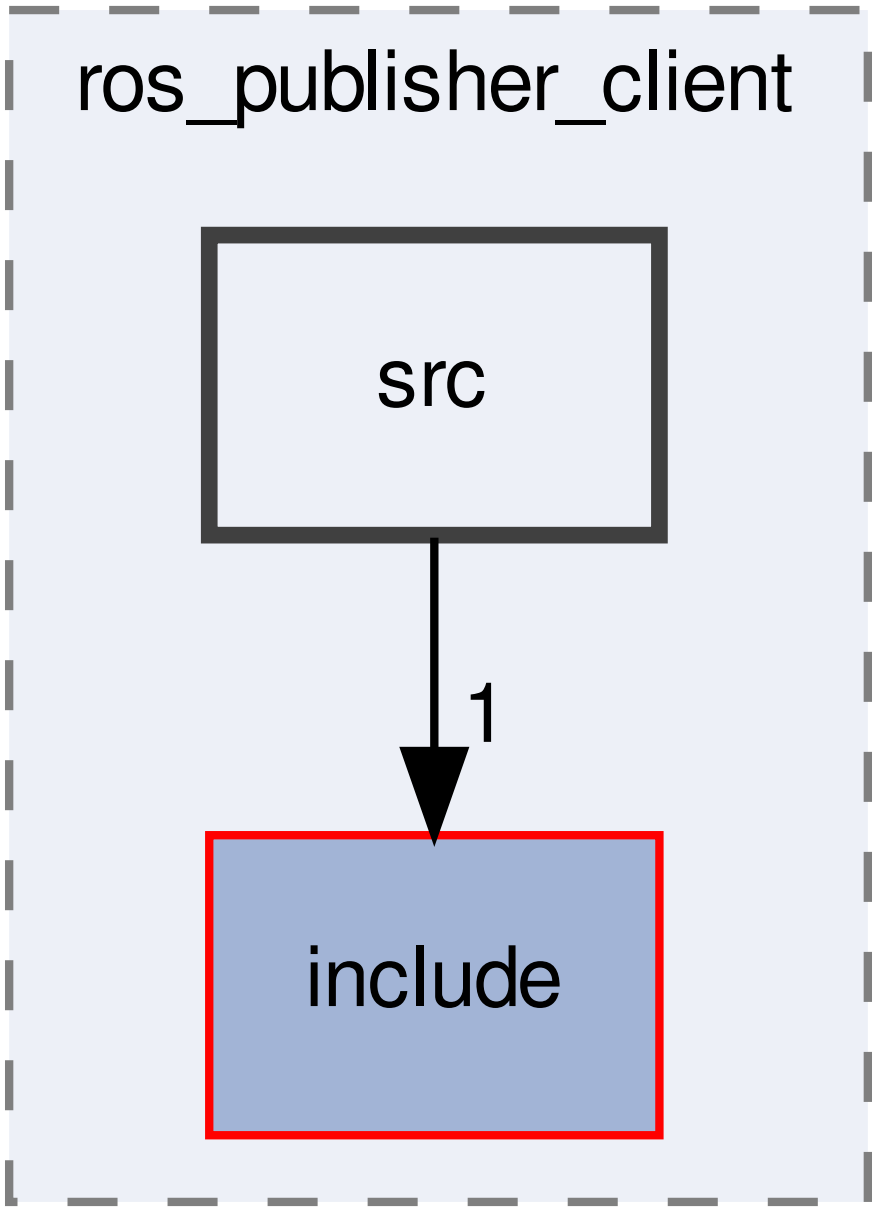
ros_publisher_client
src
1
include