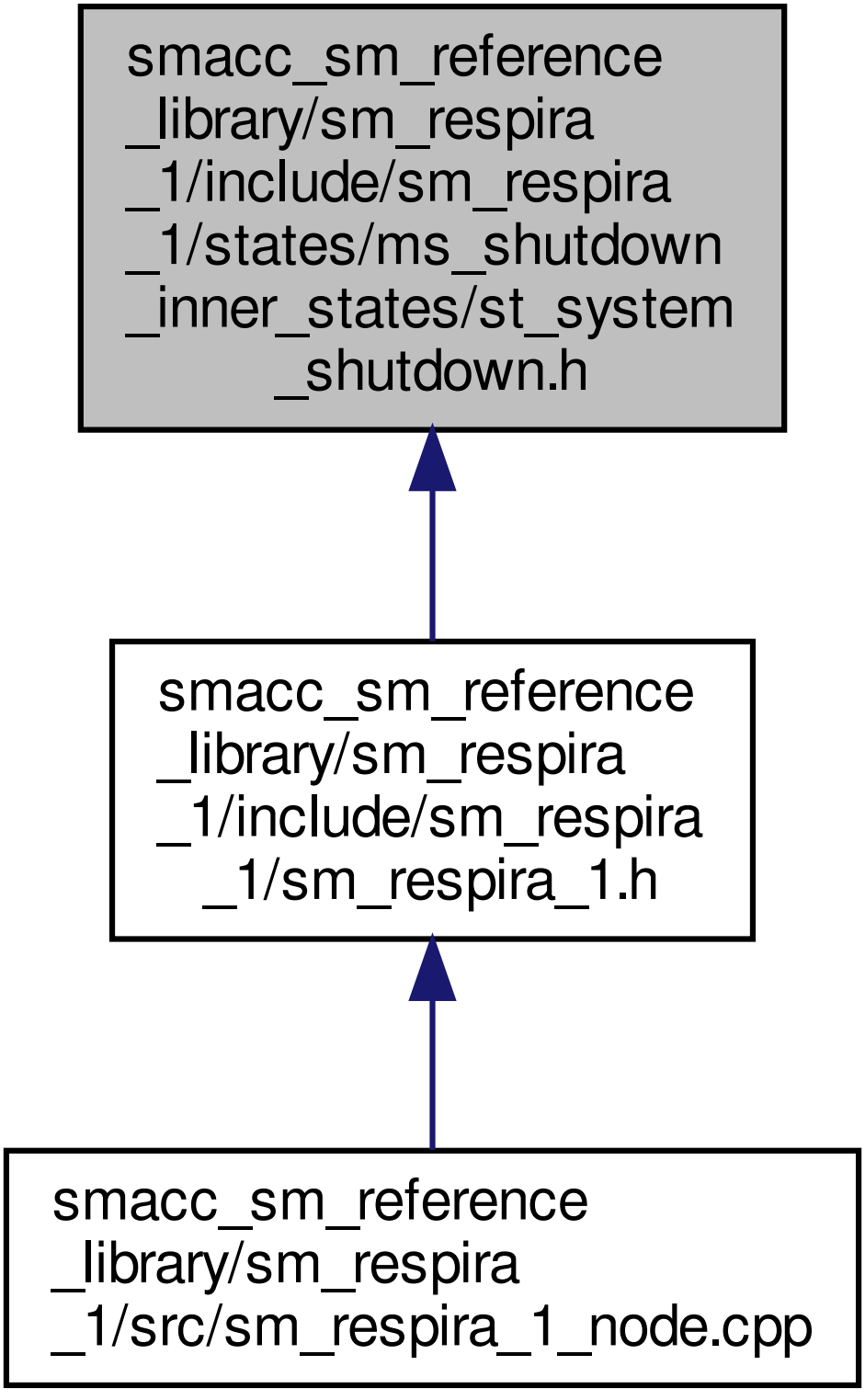
smacc_sm_reference
_library/sm_respira
_1/include/sm_respira
_1/states/ms_shutdown
_inner_states/st_system
_shutdown.h
smacc_sm_reference
_library/sm_respira
_1/include/sm_respira
_1/sm_respira_1.h
smacc_sm_reference
_library/sm_respira
_1/src/sm_respira_1_node.cpp