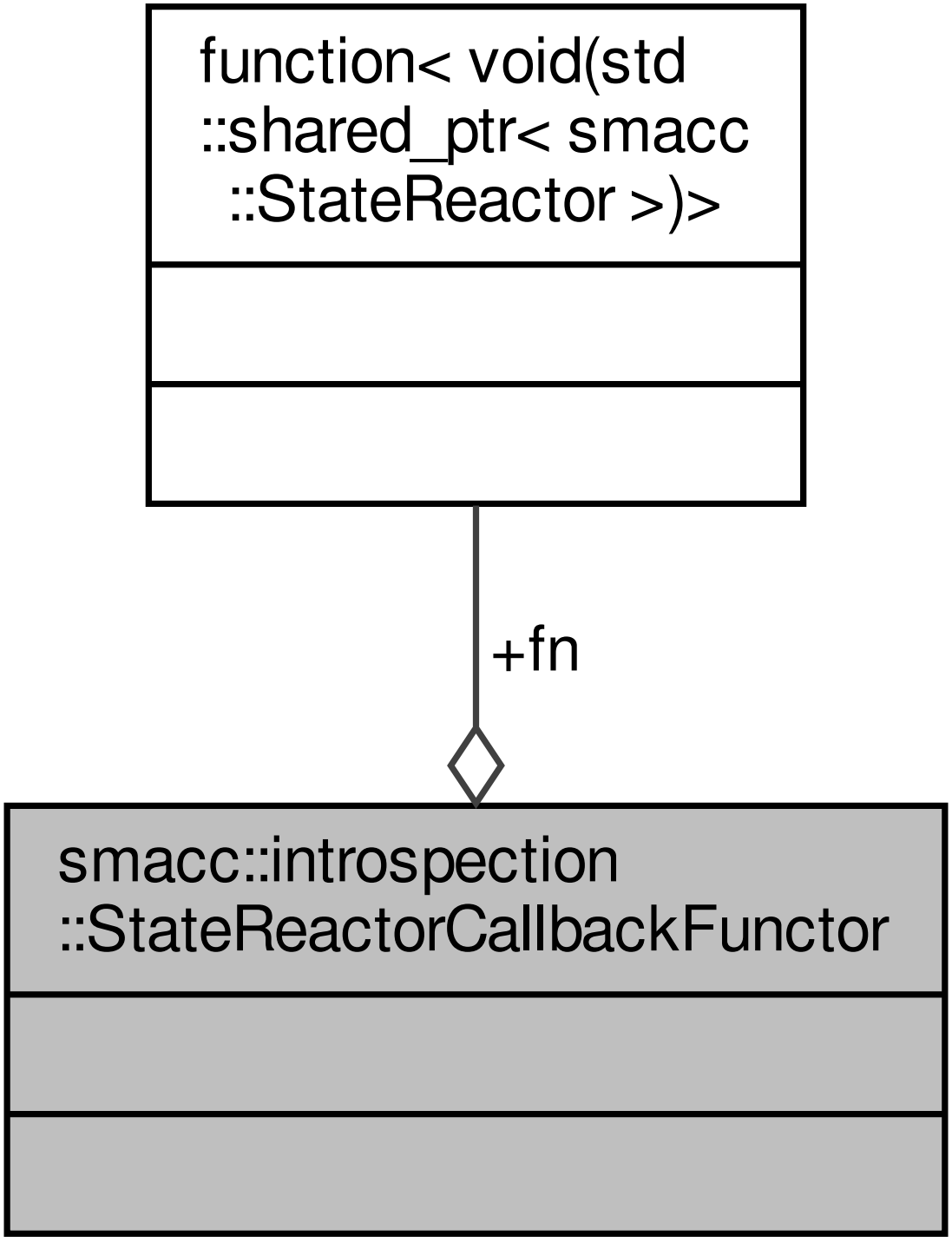
function< void(std
::shared_ptr< smacc
::StateReactor >)>
+fn
smacc::introspection
::StateReactorCallbackFunctor