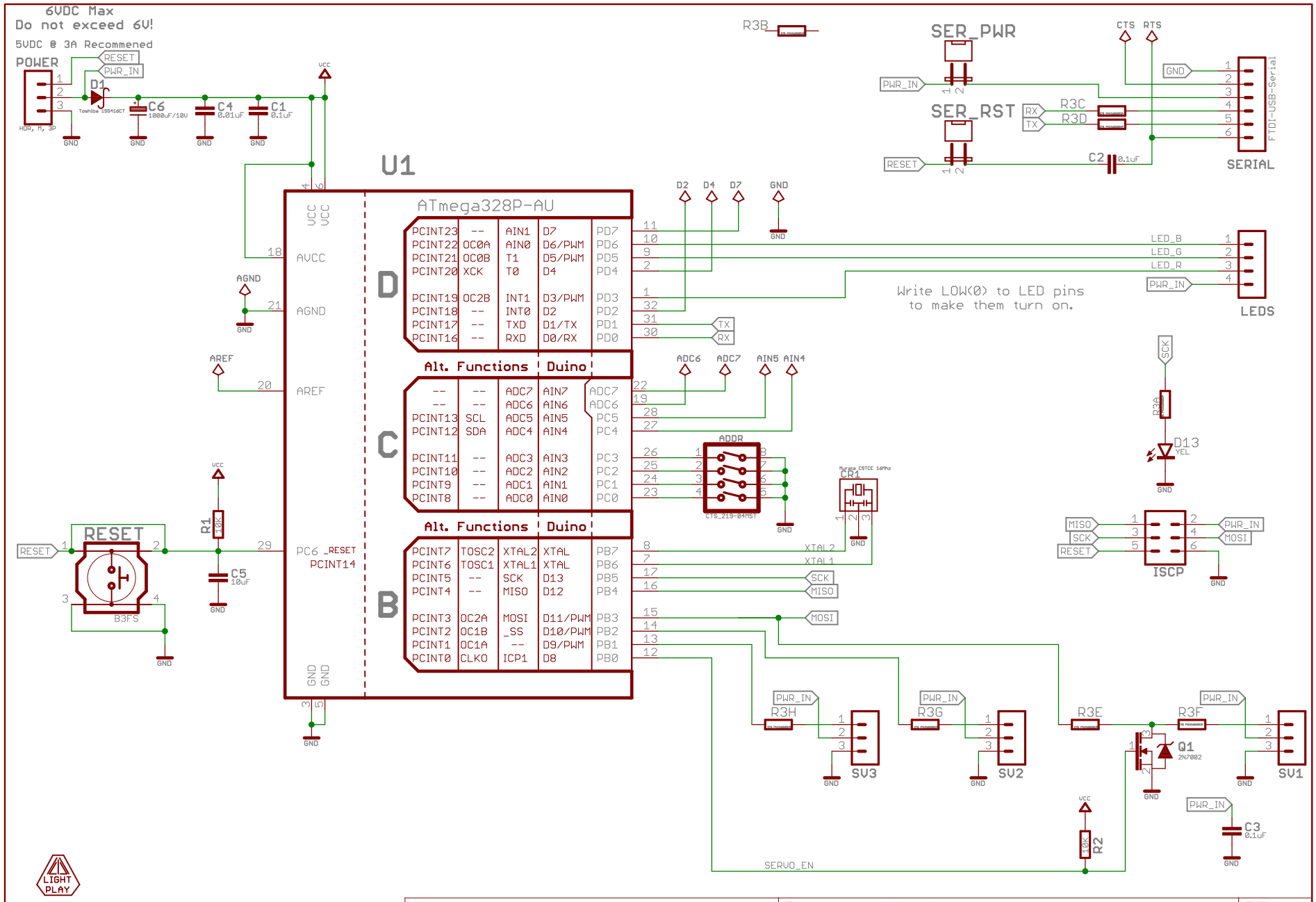

Robot Army LLC Robot-Army.com	Document Number: LP-BRAIN-01	REV: E
TITLE: brain	Date: 5/28/14 4:17 PM	Sheet: 1/1