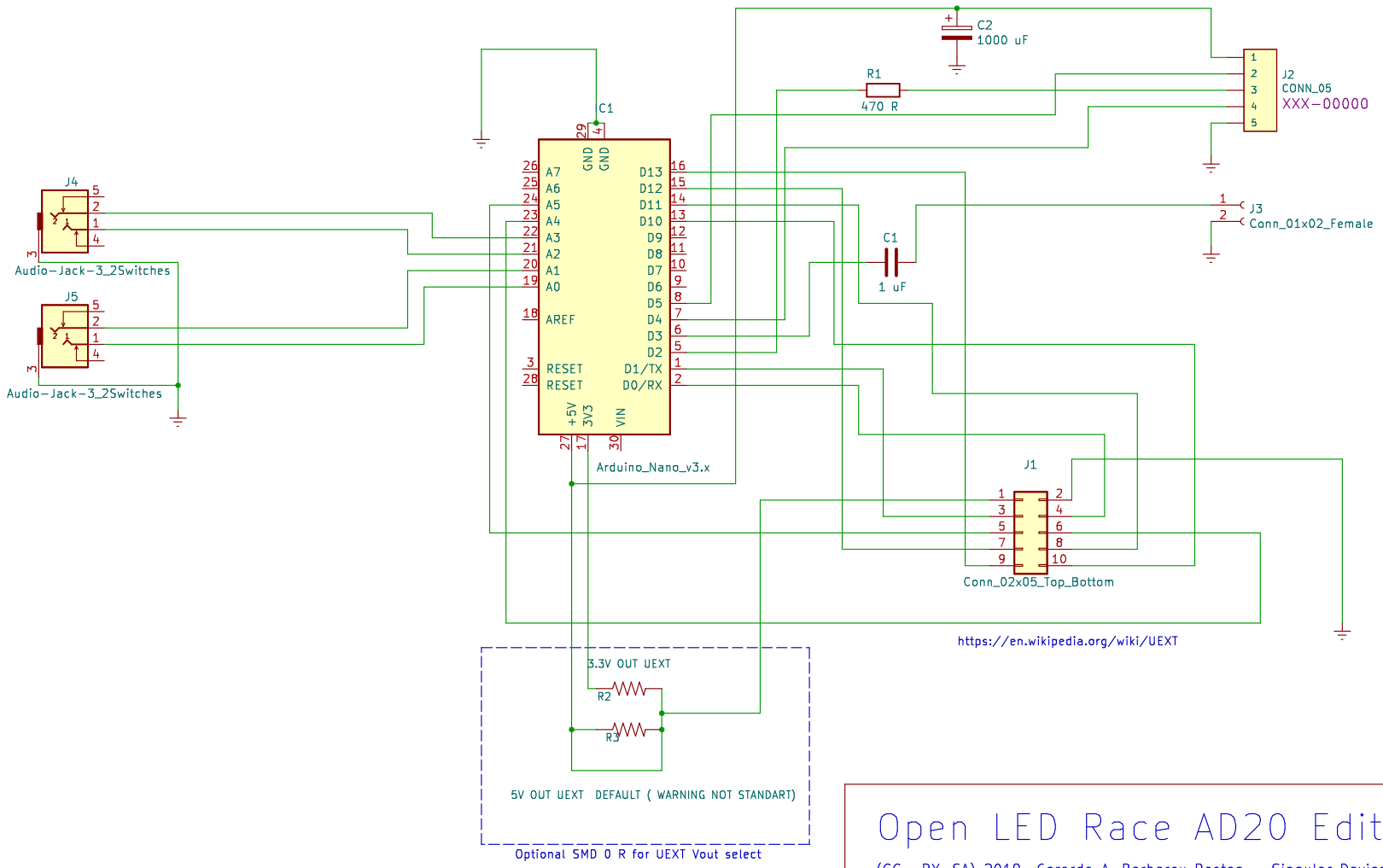

Open LED Race AD20 Edition

(CC- BY-SA) 2019 Gerardo A. Barbarov Rostan - Singular Devices Maker Studio

Sheet: /
File: openLEDrace_AD20_pub.kicad_sch

Title:

Size: A4	Date:	**Rev:**
KiCad E.D.A. kicad 7.0.11-7.0.11~ubuntu22.04.1		Id: 1/1