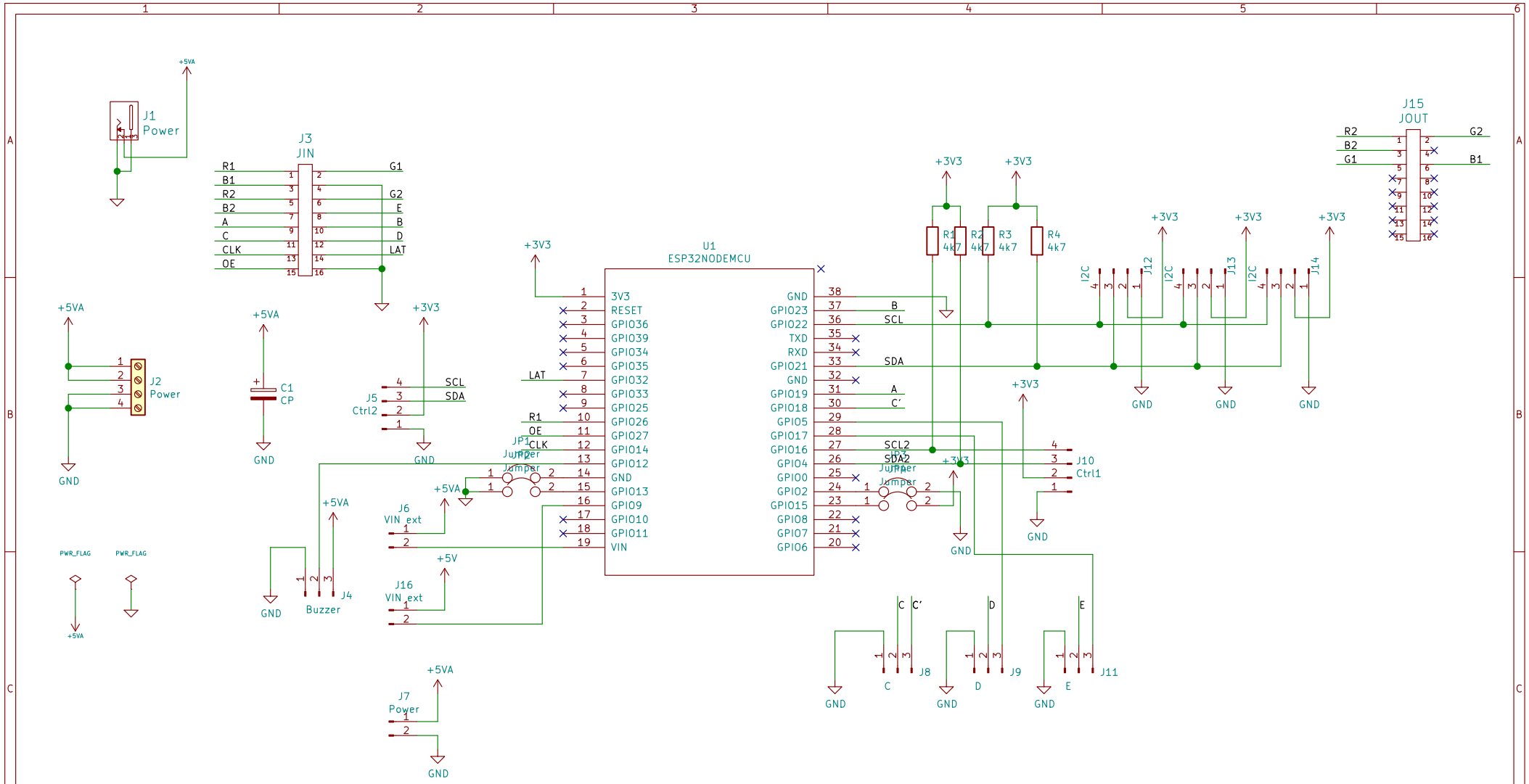

Sheet: /
File: esp32-ledmatrix-shield.sch

Title:

Size: A4	Date:	**Rev:**
KiCad E.D.A. kicad 5.1.4-e60b26684ubuntu16.04.1		Id: 1/1