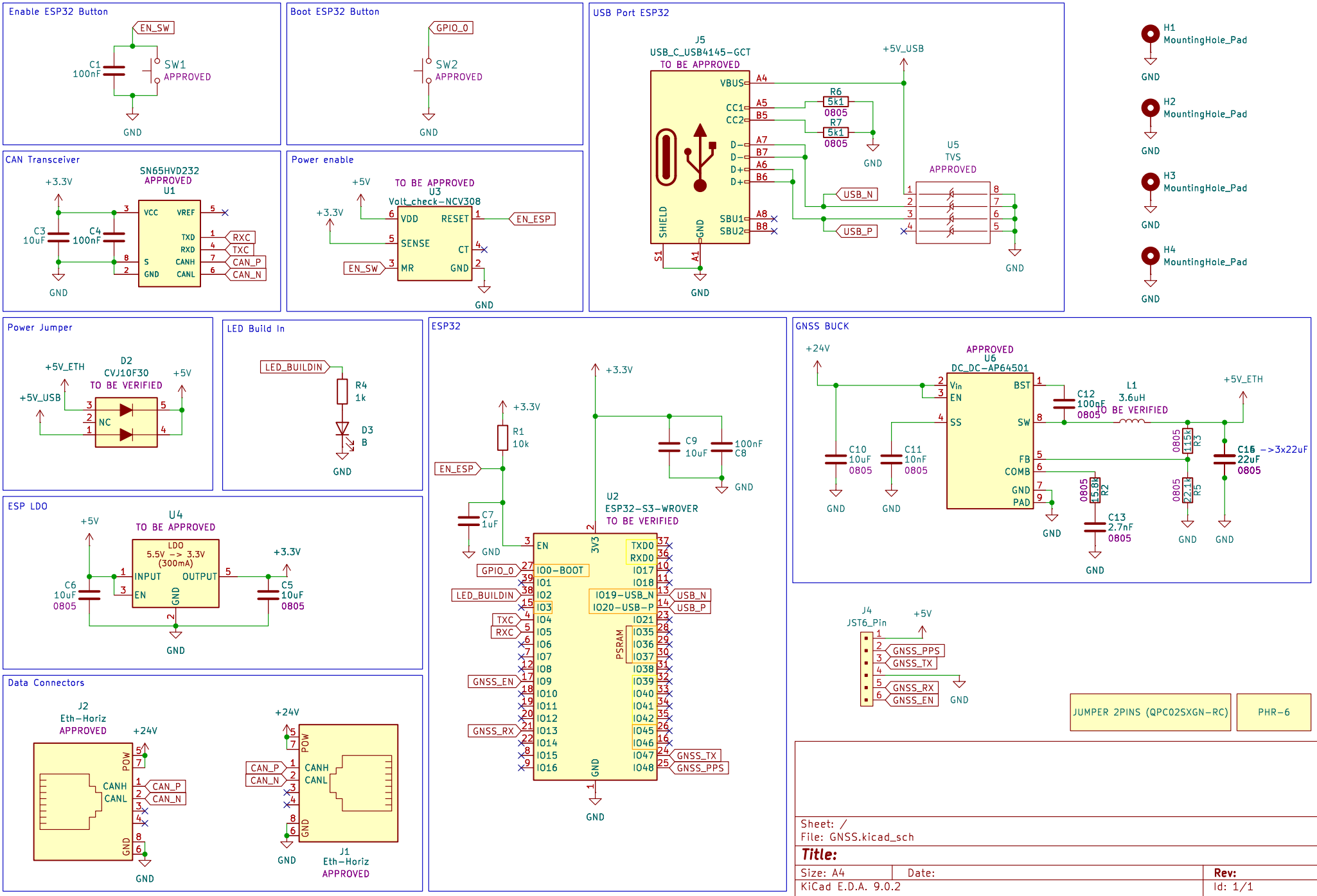
Enable ESP32 Button
EN_SW
C1
100nF
SW1
APPROVED
GND
Boot ESP32 Button
GPIO_0
SW2
APPROVED
GND
USB Port ESP32
J5
USB_C_USB4145-GCT
TO BE APPROVED
+5V_USB
VBUS
CC1
CC2
D-
D-
D+
D+
SHIELD
GND
SBU1
SBU2
R6
5k1
0805
R7
5k1
0805
USB_N
USB_P
U5
TVS
APPROVED
H1
MountingHole_Pad
H2
MountingHole_Pad
H3
MountingHole_Pad
H4
MountingHole_Pad
CAN Transceiver
+3.3V
SN65HVD232
APPROVED
U1
VCC
VREF
TXD
RXD
S
CANH
GND
CANL
C3
10uF
C4
100nF
RXC
TXC
CAN_P
CAN_N
Power enable
+5V
TO BE APPROVED
U3
Volt_check-NCV308
+3.3V
VDD
RESET
SENSE
CT
MR
GND
EN_SW
EN_ESP
Power Jumper
+5V_ETH
D2
CVJ10F30
TO BE VERIFIED
+5V
+5V_USB
NC
LED Build In
LED_BUILDIN
R4
1k
D3
B
GND
ESP32
+3.3V
R1
10k
EN_ESP
C7
1uF
C9
10uF
100nF
C8
U2
ESP32-S3-WROVER
TO BE VERIFIED
EN
3V3
IO0-BOOT
IO19-USB_N
IO20-USB-P
TXD0
RXD0
PSRAM
GPIO_0
LED_BUILDIN
TXC
RXC
GNSS_EN
GNSS_RX
USB_N
USB_P
GNSS_TX
GNSS_PPS
GND
GNSS BUCK
+24V
APPROVED
U6
DC_DC-AP64501
Vin
EN
SS
BST
SW
FB
COMB
GND
PAD
C10
10uF
0805
C11
10nF
0805
C12
100nF
0805
L1
3.6uH
TO BE VERIFIED
+5V_ETH
R3
115k
0805
C15 ->3x22uF
22uF
0805
R2
15.8k
0805
C13
2.7nF
0805
R5
221k
0805
ESP LDO
+5V
U4
TO BE APPROVED
LDO
5.5V -> 3.3V
(300mA)
INPUT
OUTPUT
EN
GND
+3.3V
C6
10uF
0805
C5
10uF
0805
Data Connectors
J2
Eth-Horiz
APPROVED
+24V
POW
CANH
CANL
CAN_P
CAN_N
GND
J1
Eth-Horiz
APPROVED
J4
JST6_Pin
+5V
GNSS_PPS
GNSS_TX
GNSS_RX
GNSS_EN
JUMPER 2PINS (QPC02SXGN-RC)
PHR-6
Sheet: /
File: GNSS.kicad_sch
Title:
Size: A4
Date:
Rev:
KiCad E.D.A. 9.0.2
Id: 1/1