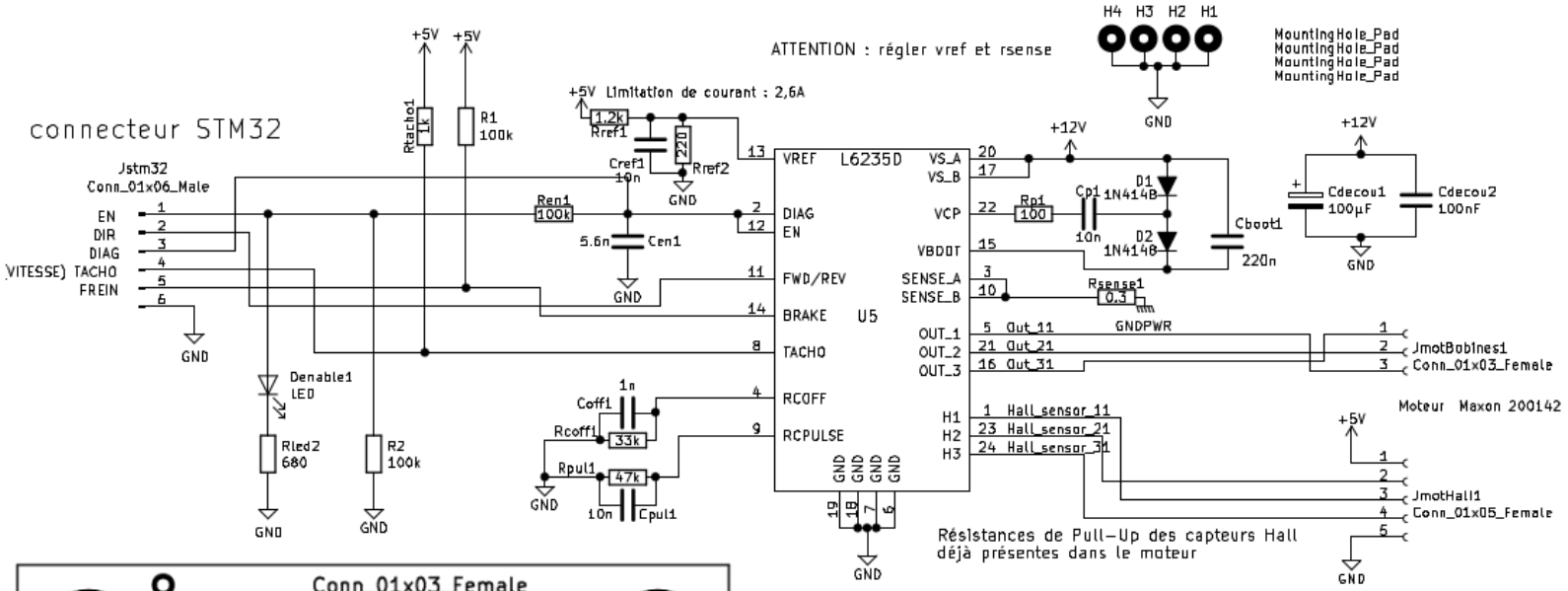

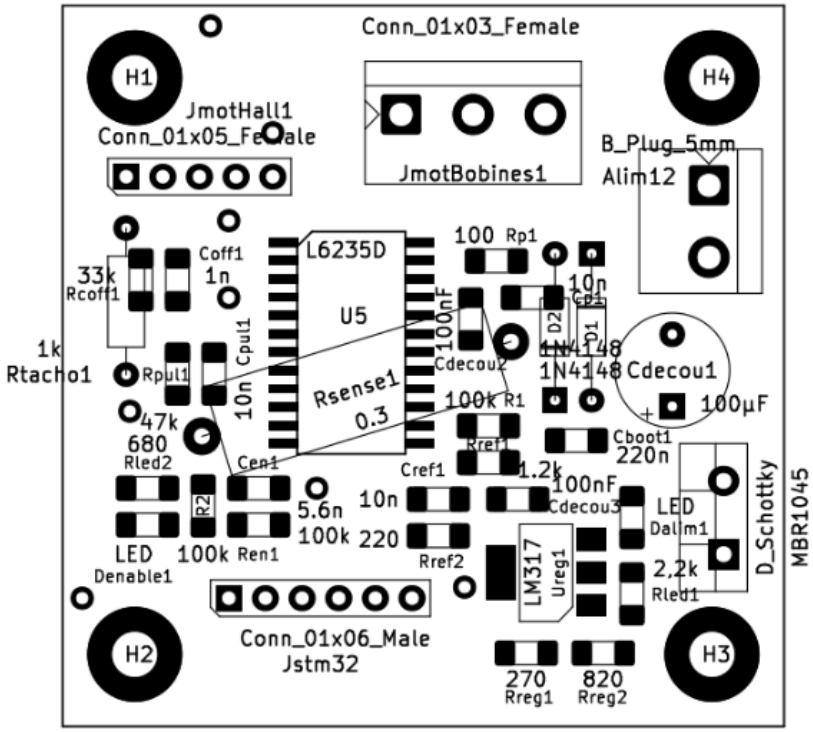

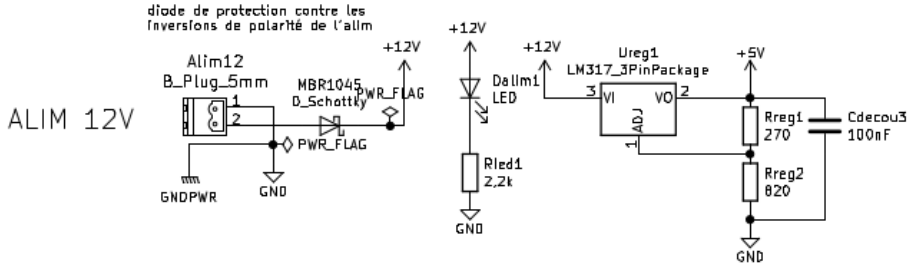

Robotronik

Sheet: /

File: driver_brushless.sch

Title: Commande moteur brushless

Size: A4	Date: 2019-10-22	**Rev: 1**
KiCad E.D.A. kicad 5.0.2+dfsg1-1		Id: 1/1