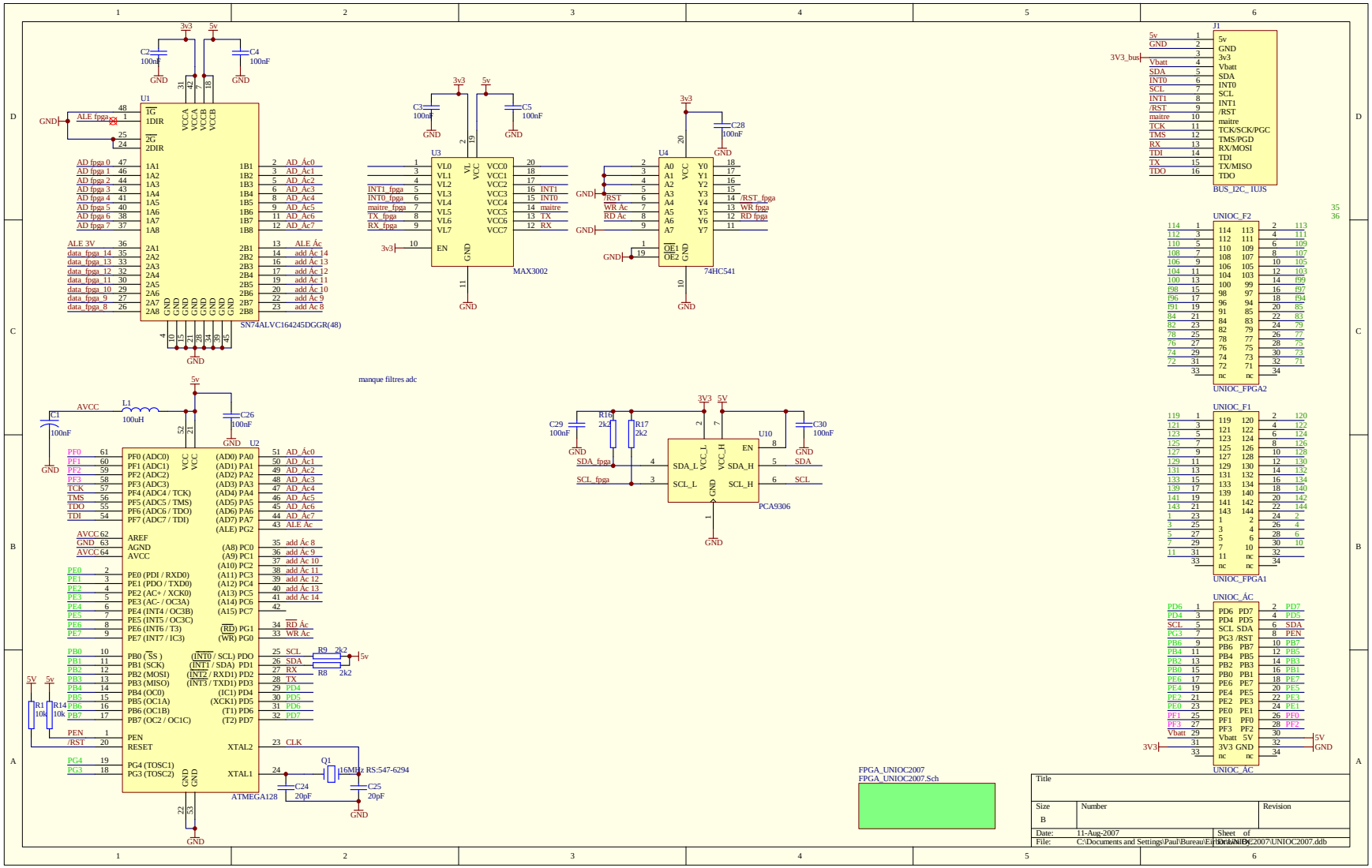
U1
SN74ALVC164245DGGR(48)
U2
ATMEGA128
U3
MAX3002
U4
74HC541
U10
PCA9306
J1
BUS_I2C_ IUJS
UNIOC_F2
UNIOC_FPGA2
UNIOC_F1
UNIOC_FPGA1
UNIOC_ÁC
manque filtres adc
FPGA_UNIOC2007
FPGA_UNIOC2007.Sch
Title
Size
B
Number
Revision
Date: 11-Aug-2007
Sheet of
File: C:\Documents and Settings\Paul\Bureau\Eq\UNIOC2007\UNIOC2007.ddb