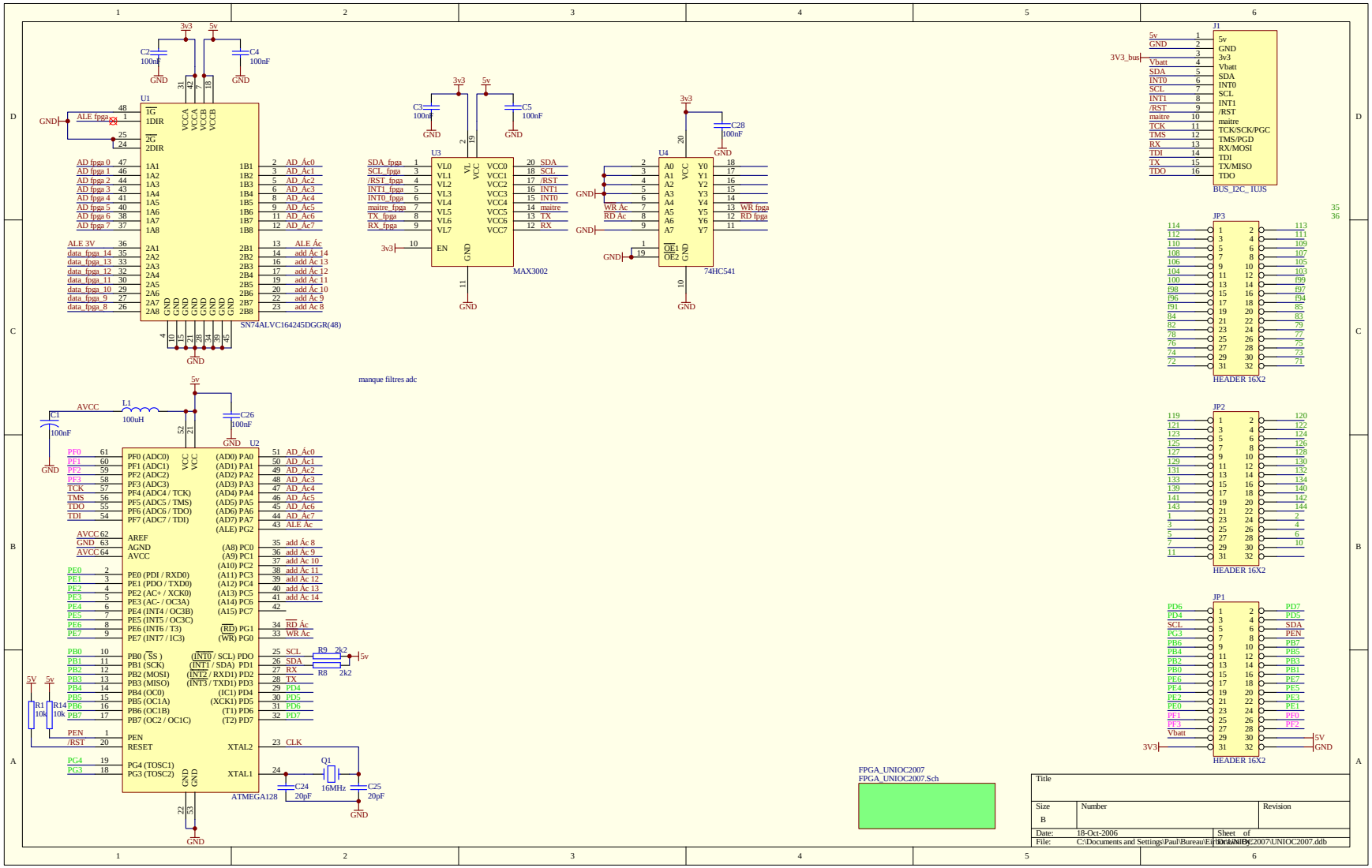
U1
SN74ALVC164245DGGR(48)
U2
ATMEGA128
U3
MAX3002
U4
74HC541
J1
BUS_I2C_ IUJS
JP3
HEADER 16X2
JP2
HEADER 16X2
JP1
HEADER 16X2
manque filtres adc
FPGA_UNIOC2007
FPGA_UNIOC2007.Sch
Title
Size
B
Number
Revision
Date: 18-Oct-2006
Sheet of
File: C:\Documents and Settings\Paul\Bureau\Eurocircuits\UNIOC2007\UNIOC2007.ddb
Drawn By: