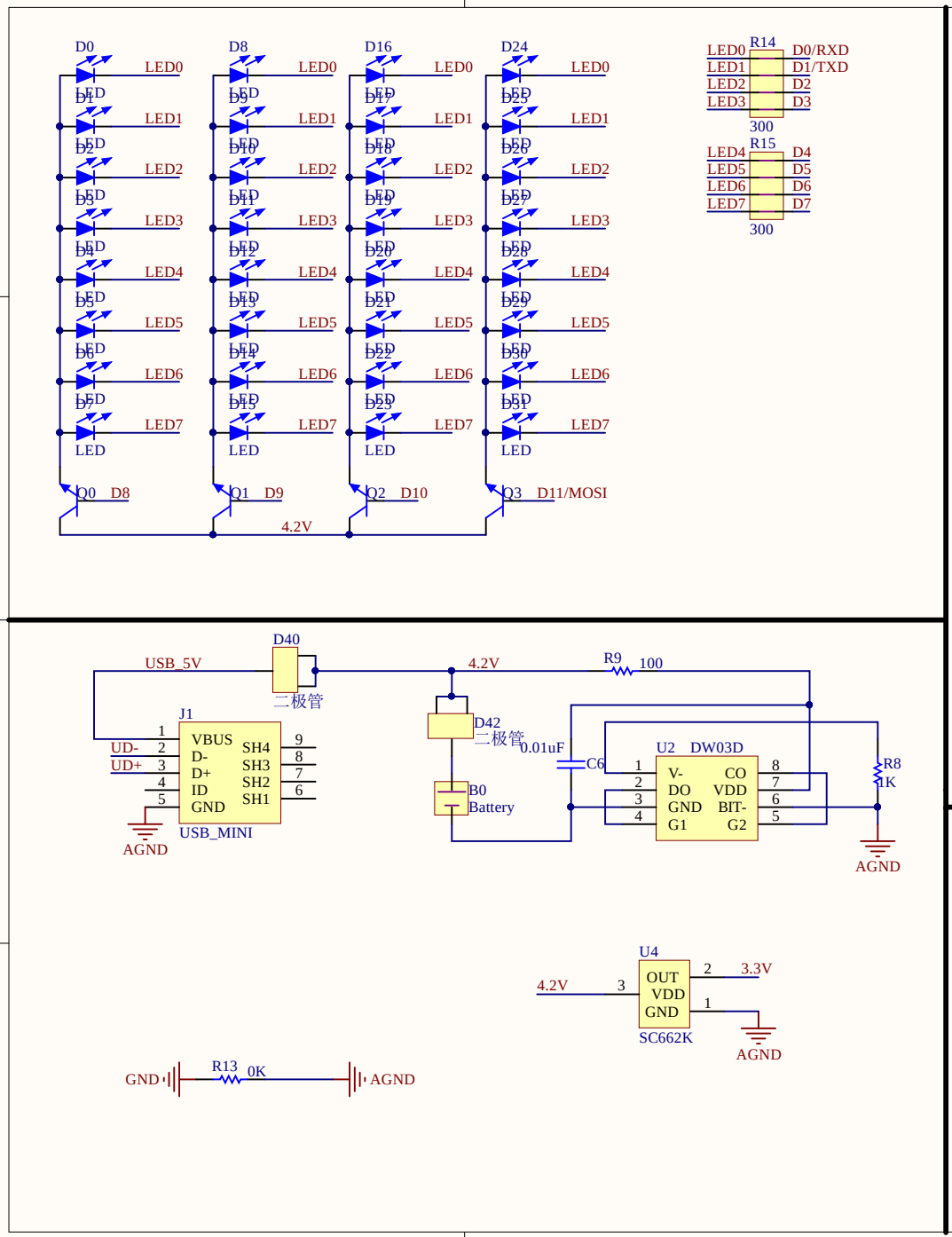

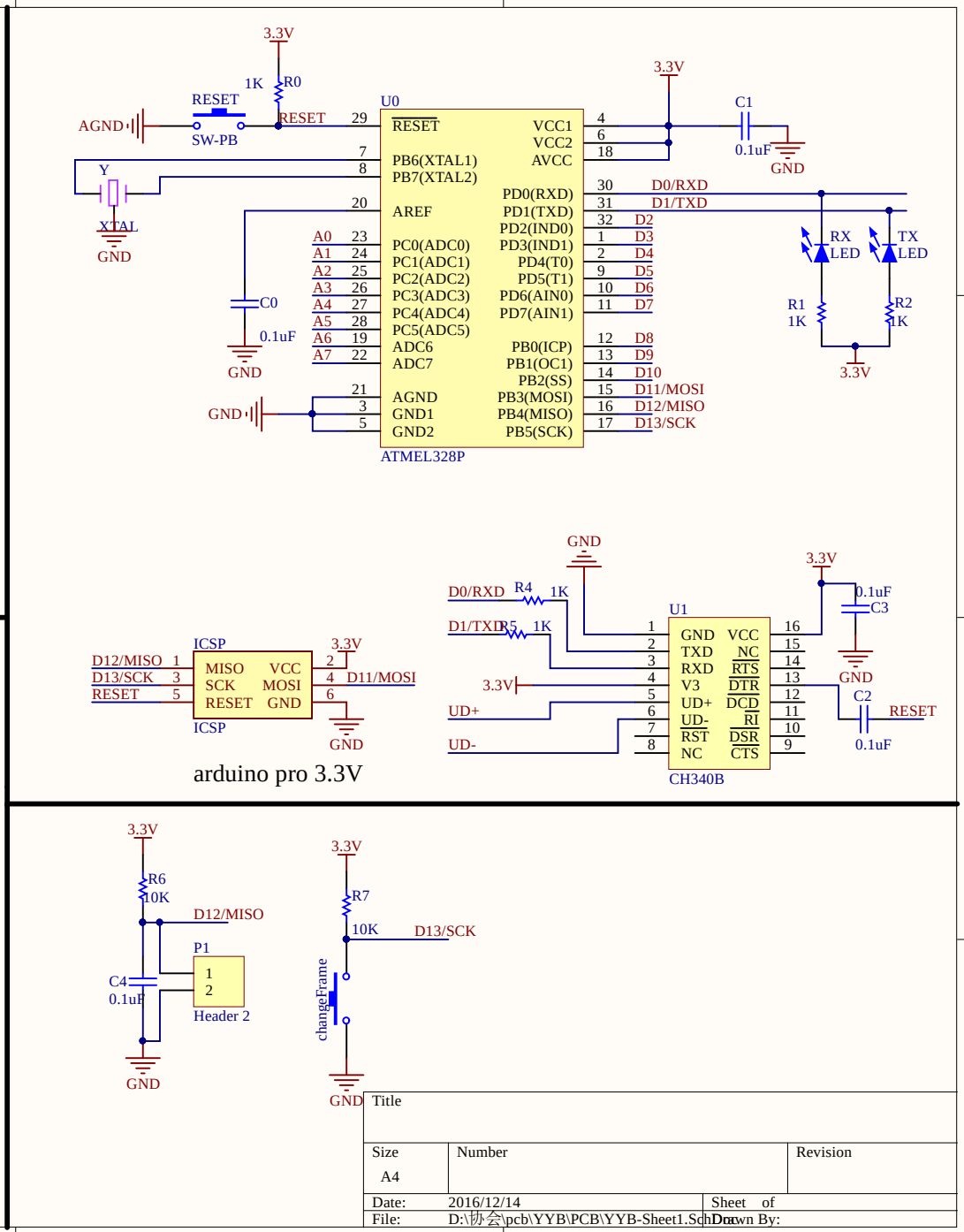

Title		
Size A4	Number	Revision
Date: 2016/12/14	Sheet of	
File: D:\协会\pcb\YYB\PCB\YYB-Sheet1.SchDoc	Drawn By:	