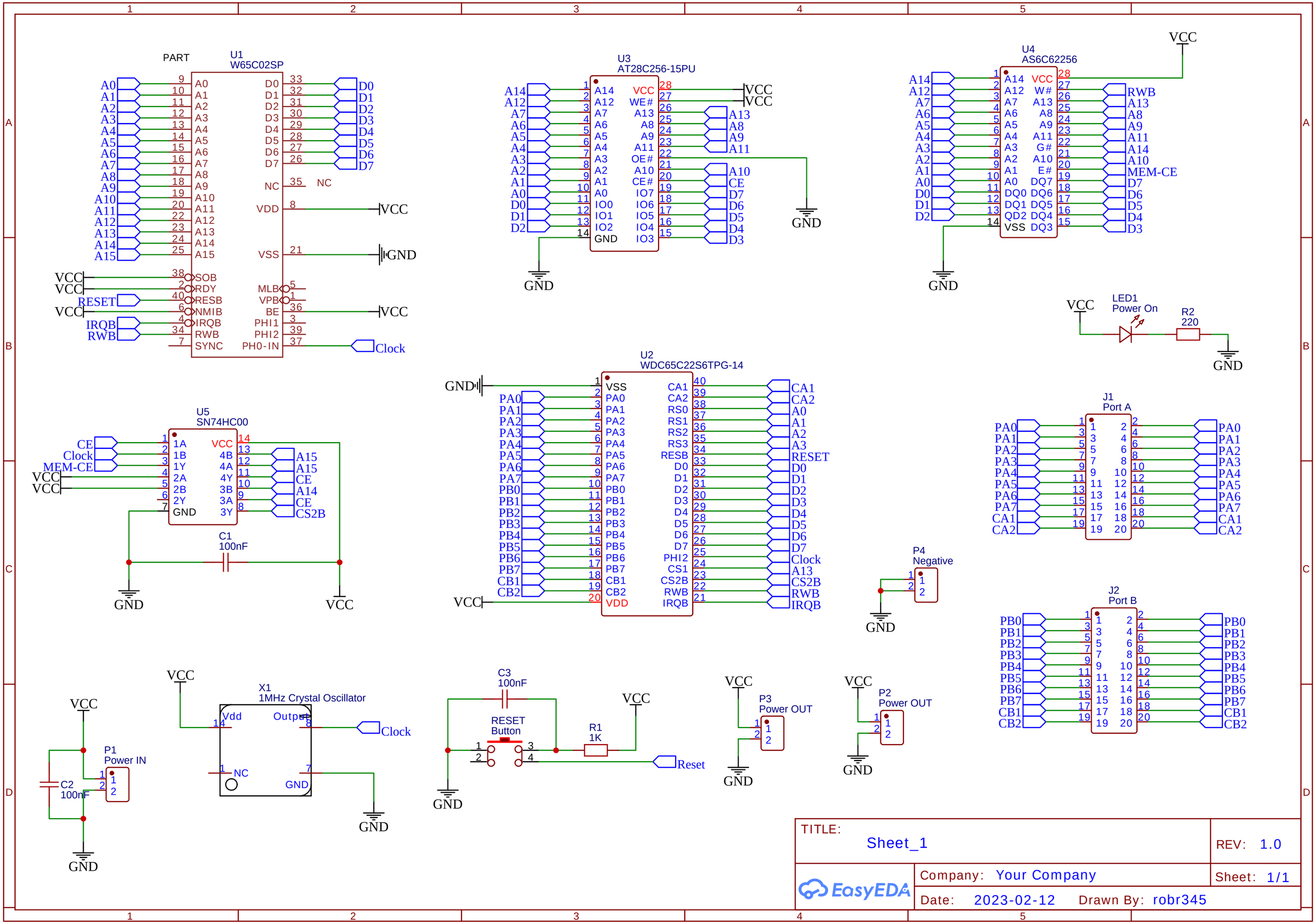
PART
U1
W65C02SP
U3
AT28C256-15PU
U4
AS6C62256
LED1
Power On
R2
220
U5
SN74HC00
C1
100nF
U2
WDC65C22S6TPG-14
J1
Port A
P4
Negative
J2
Port B
P1
Power IN
C2
100nF
X1
1MHz Crystal Oscillator
C3
100nF
RESET
Button
R1
1K
P3
Power OUT
P2
Power OUT
VCC
GND
Clock
Reset
TITLE:
Sheet_1
REV: 1.0
Company: Your Company
Sheet: 1/1
Date: 2023-02-12
Drawn By: robr345
EasyEDA