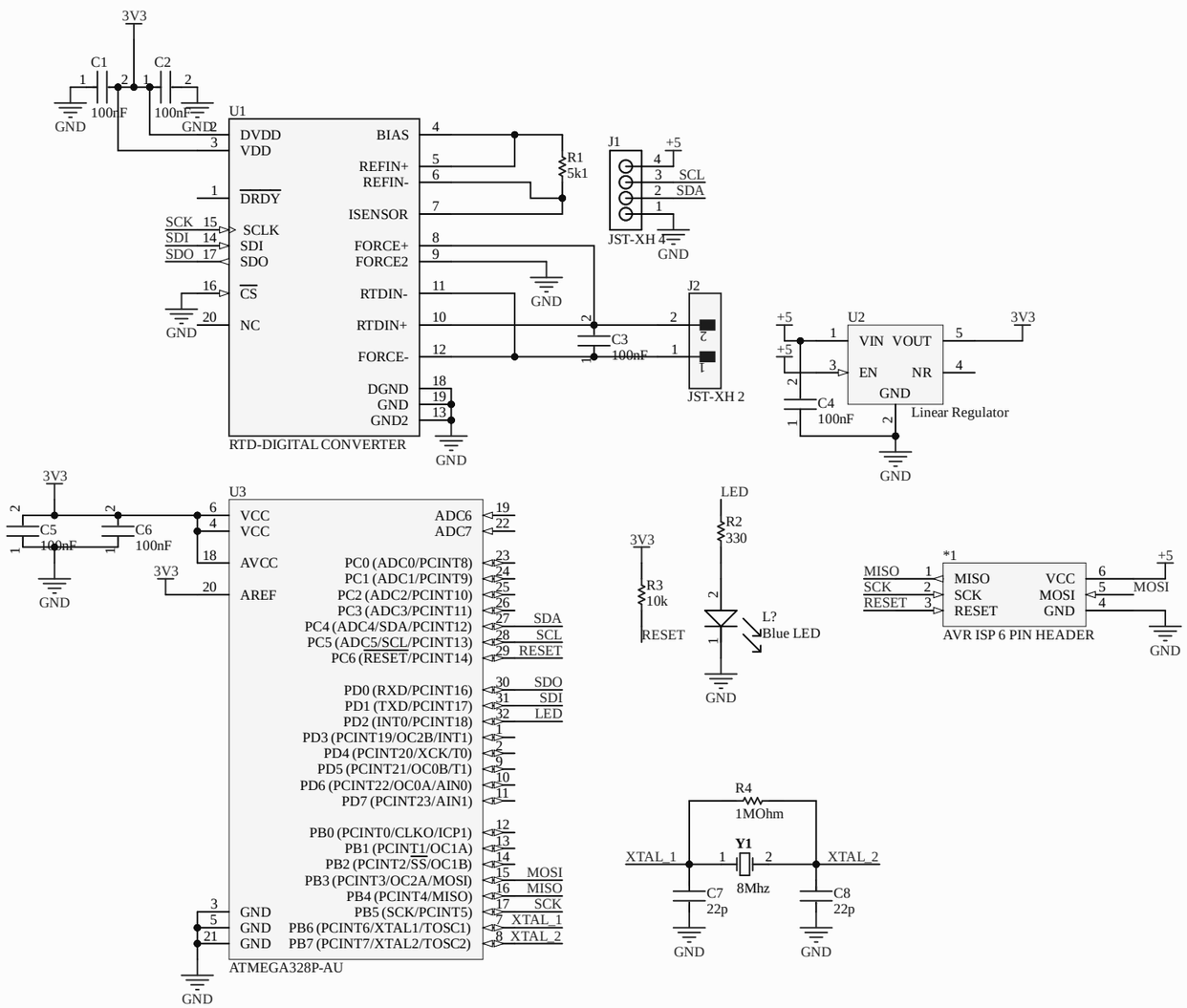

Title		
Size A3	Number	Revision
Date: 10/16/2021	Sheet of	
File: C:\Users\..\MING RTD.SchDoc	Drawn By:	