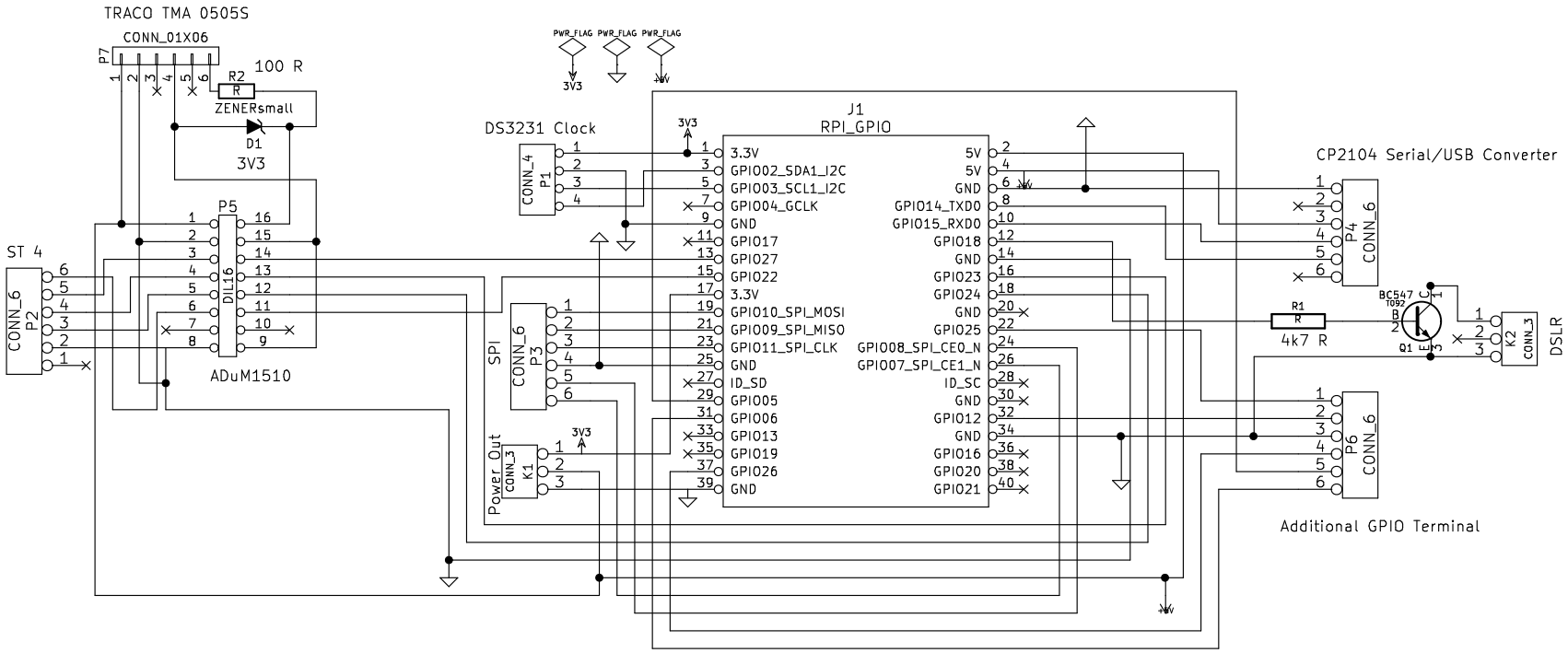

Sheet: /
File: TSC_PiHat.sch

Title: TSC Pi 3 HAT

Size: A4	Date: 17 may 2017	Rev:
KiCad E.D.A. eeschema 4.0.4-snap1-stable		Id: 1/1