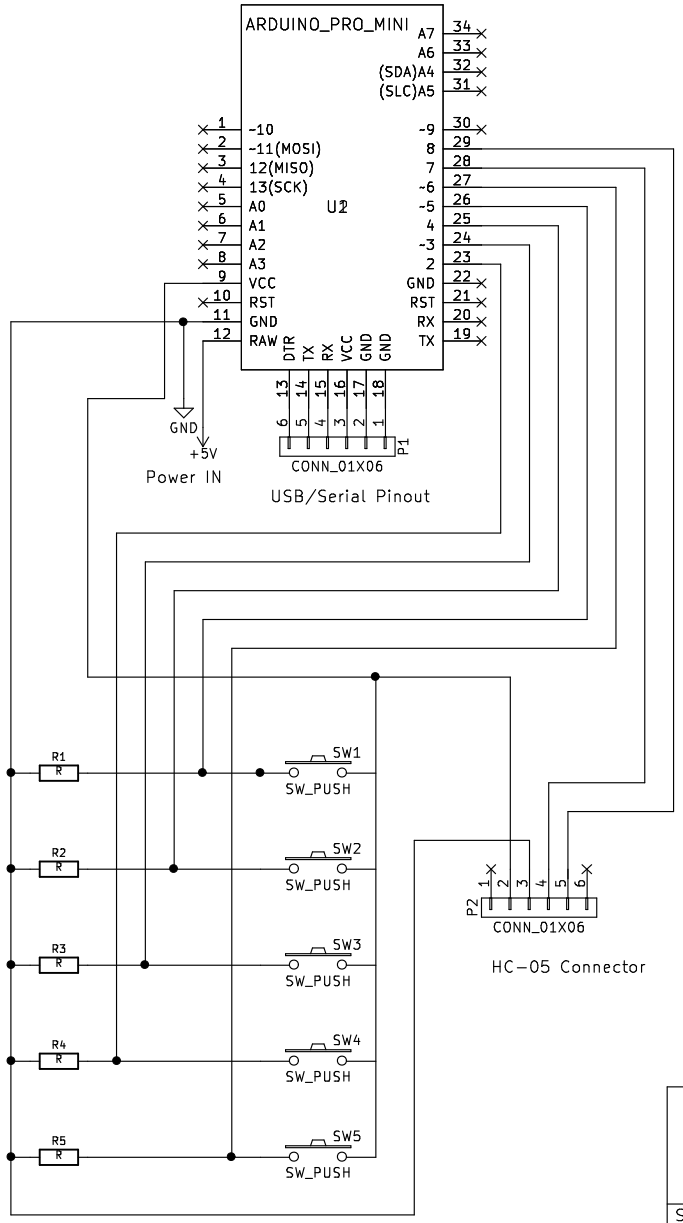

Sheet: /
File: TSC_Handbox.sch

Title: TSC Handbox

Size: A4	Date: 29 apr 2017	Rev:
KiCad E.D.A. eeschema 4.0.4-snap1-stable		Id: 1/1