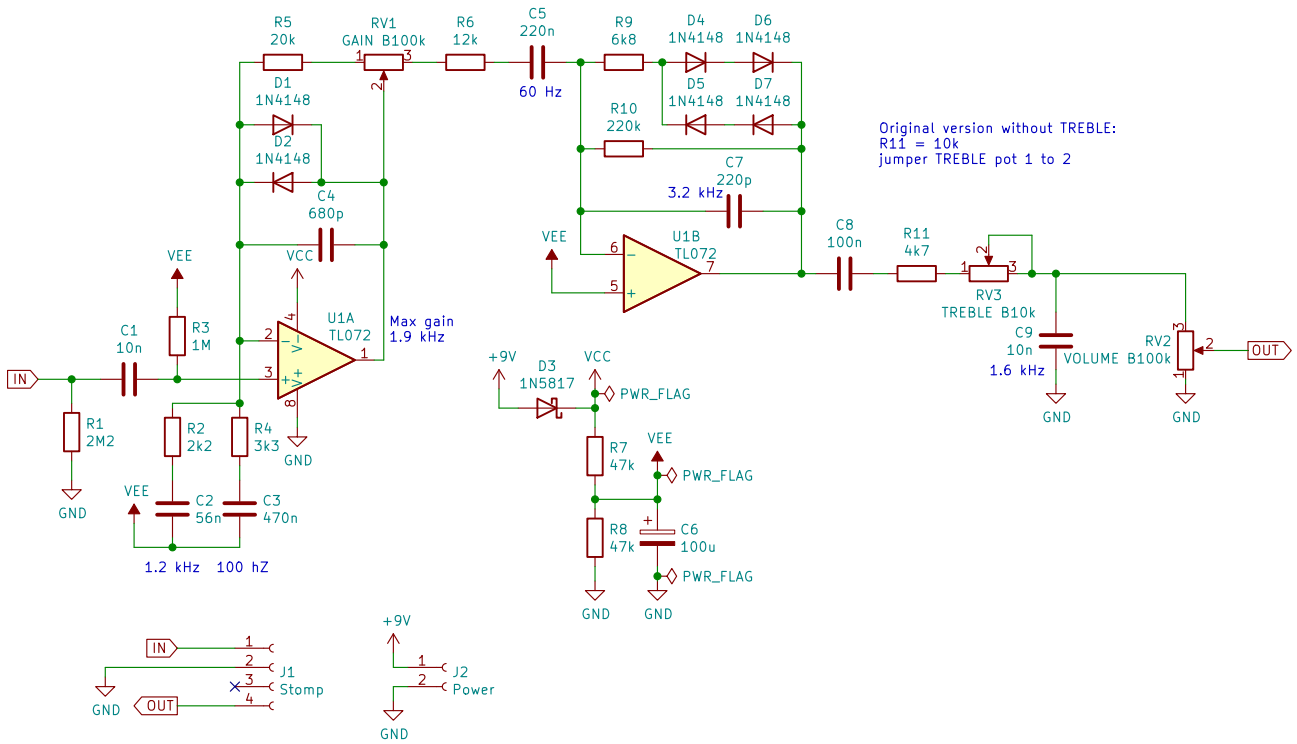

Wattbreaker by Mark Hammer

https://www.diystompboxes.com/smfforum/index.php?topic=126135.0

Sheet: /
File: wattbreaker.kicad_sch

Title: Wattbreaker

Size: A4	Date: 2021-01-06	**Rev:** v0.1
KiCad E.D.A. kicad (5.99.0-8212-gba387bbb83)		Id: 1/1