REVISIONS			
REV	DESCRIPTION	DATE	APPROVED

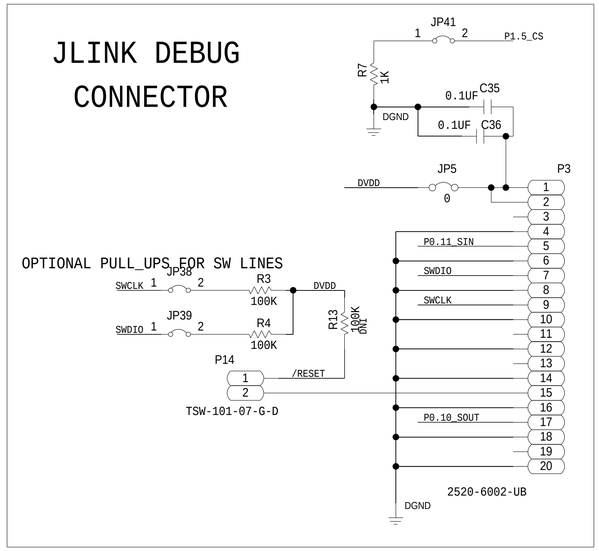

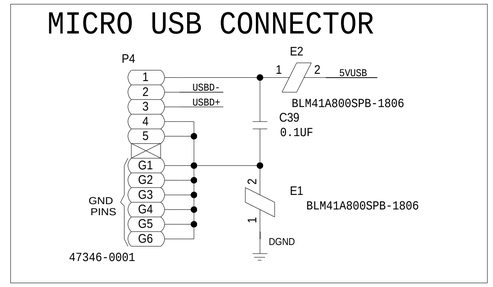

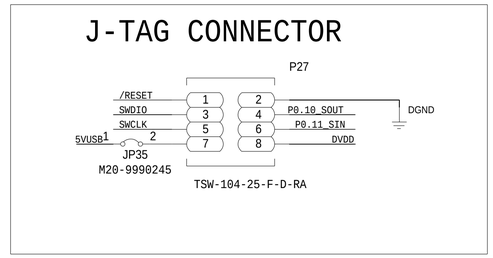

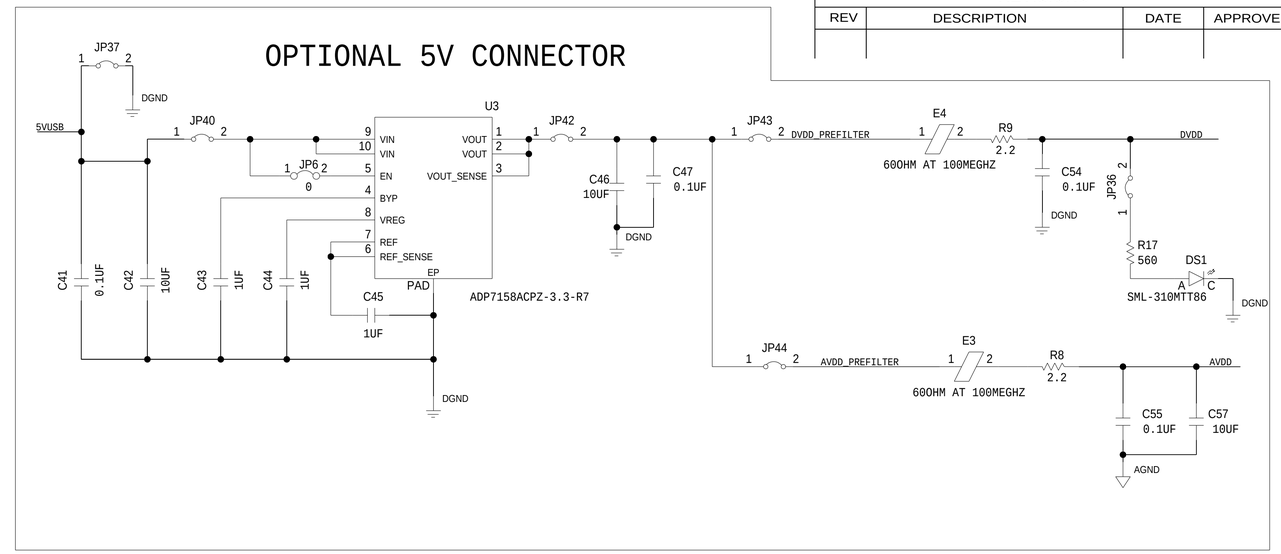

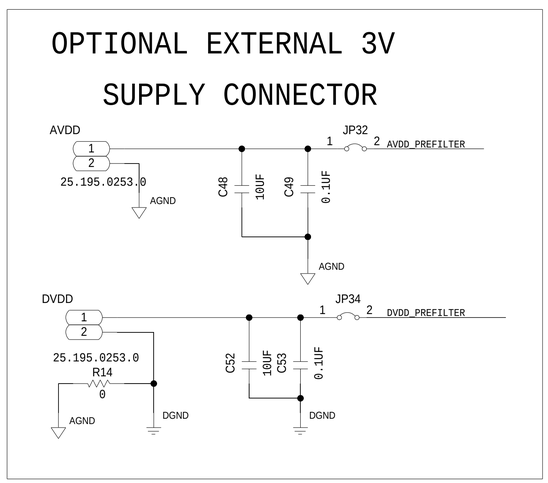

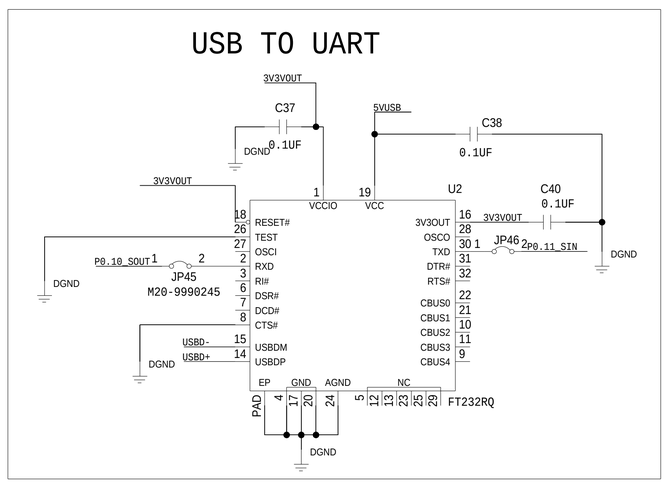

POWER OPTIONS:

1) VIA USB
2) CONNECT 5V TO 2-PIN CONNECTOR
3) CONNECT 3.3V DIRECT TO DVDD OR AVDD
4) 5V USB FROM 8-PIN JTAG CONNECTOR

ANALOG DEVICES

THIS DRAWING IS THE PROPERTY OF ANALOG DEVICES INC.
IT IS NOT TO BE REPRODUCED OR COPIED, IN WHOLE OR
IN PART, OR USED IN FURNISHING INFORMATION TO OTHERS,
OR FOR ANY OTHER PURPOSE DETRIMENTAL TO THE INTERESTS
OF ANALOG DEVICES.
THE EQUIPMENT SHOWN HEREON MAY BE PROTECTED BY PATENTS
OWNED OR CONTROLLED BY OWNED ANALOG DEVICES.

SCHEMATIC

HW TYPE : Customer Evaluation
Product(s): ADuCM355
: n/a

DESIGN VIEW	DRAWING NO.	REV
<DESIGN_VIEW>	02_045865	B
PTD ENGINEER	SIZE D / SCALE 1:1	SHEET 1 OF 2
<PTD_ENGINEER>		

REVISIONS			
REV	DESCRIPTION	DATE	APPROVED

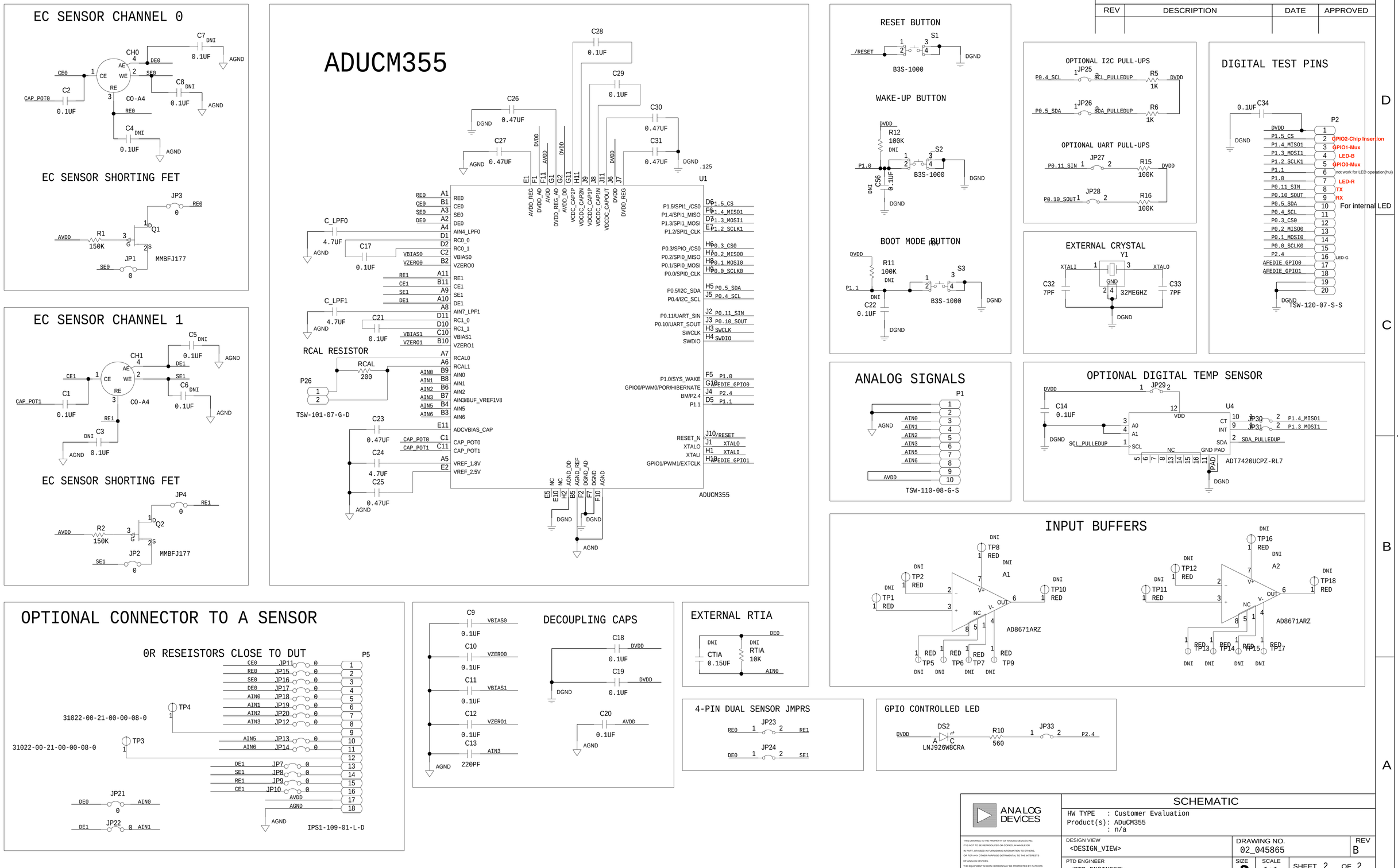

ANALOG DEVICES

THIS DRAWING IS THE PROPERTY OF ANALOG DEVICES INC.
IT IS NOT TO BE REPRODUCED OR COPIED, IN WHOLE OR
IN PART, OR USED IN FURNISHING INFORMATION TO OTHERS,
OR FOR ANY OTHER PURPOSE DETRIMENTAL TO THE INTERESTS
OF ANALOG DEVICES.
THE EQUIPMENT SHOWN HEREON MAY BE PROTECTED BY PATENTS
OWNED OR CONTROLLED BY OWNED ANALOG DEVICES.

SCHEMATIC

HW TYPE : Customer Evaluation
Product(s): ADuCM355
: n/a

DESIGN VIEW	DRAWING NO.	REV
<DESIGN_VIEW>	02_045865	B

PTD ENGINEER	SIZE	SCALE	SHEET
<PTD_ENGINEER>	D	1:1	2 OF 2