# USBC

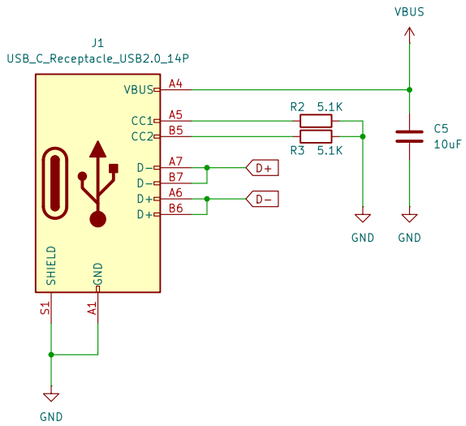


# LDO

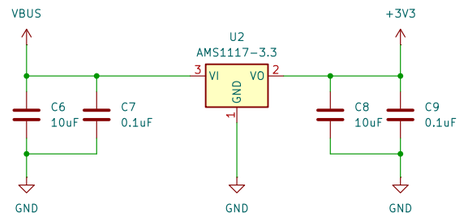


# LSM9DS1TR

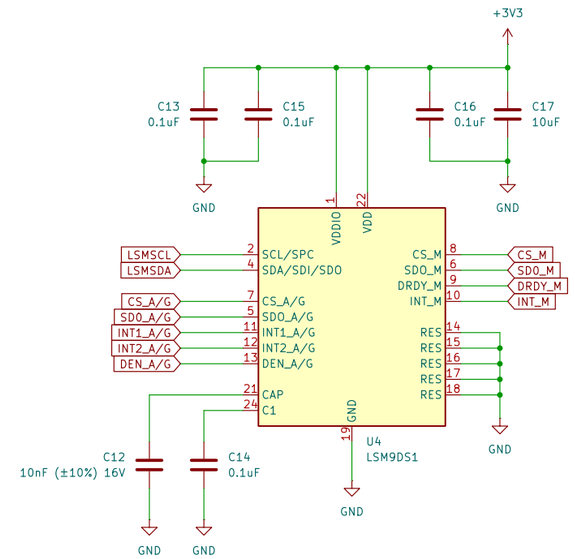


# MCU

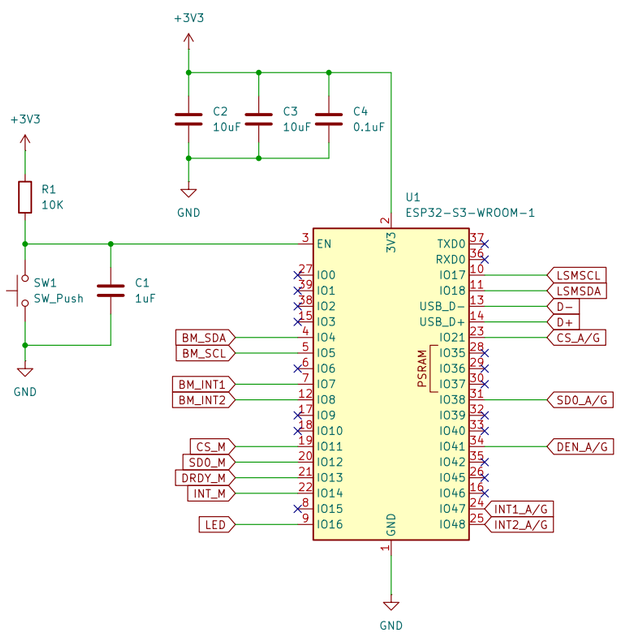


# LEDS

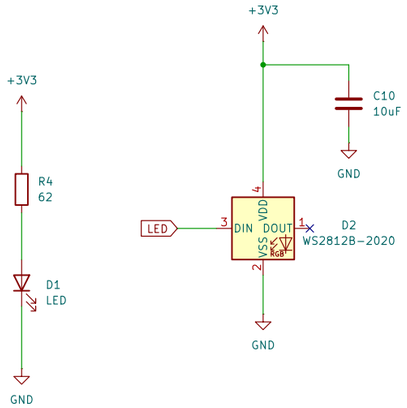


# TESTPOINTS

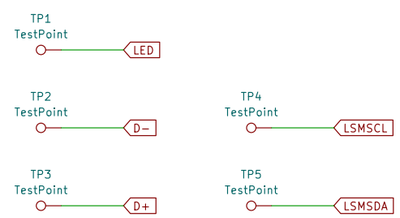


# BMI270

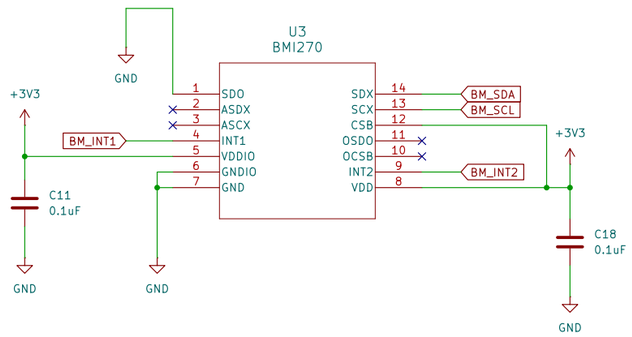


Designed By: Osodo Rodney
**0x6flab**

Sheet: /
File: subira.kicad_sch

***Title: subira-imu***

| | | |
|---|---|---|
| Size: A3 | Date: 2025-03-29 | **Rev: v0.1.0** |
| KiCad E.D.A. 8.0.8 | | Id: 1/1 |