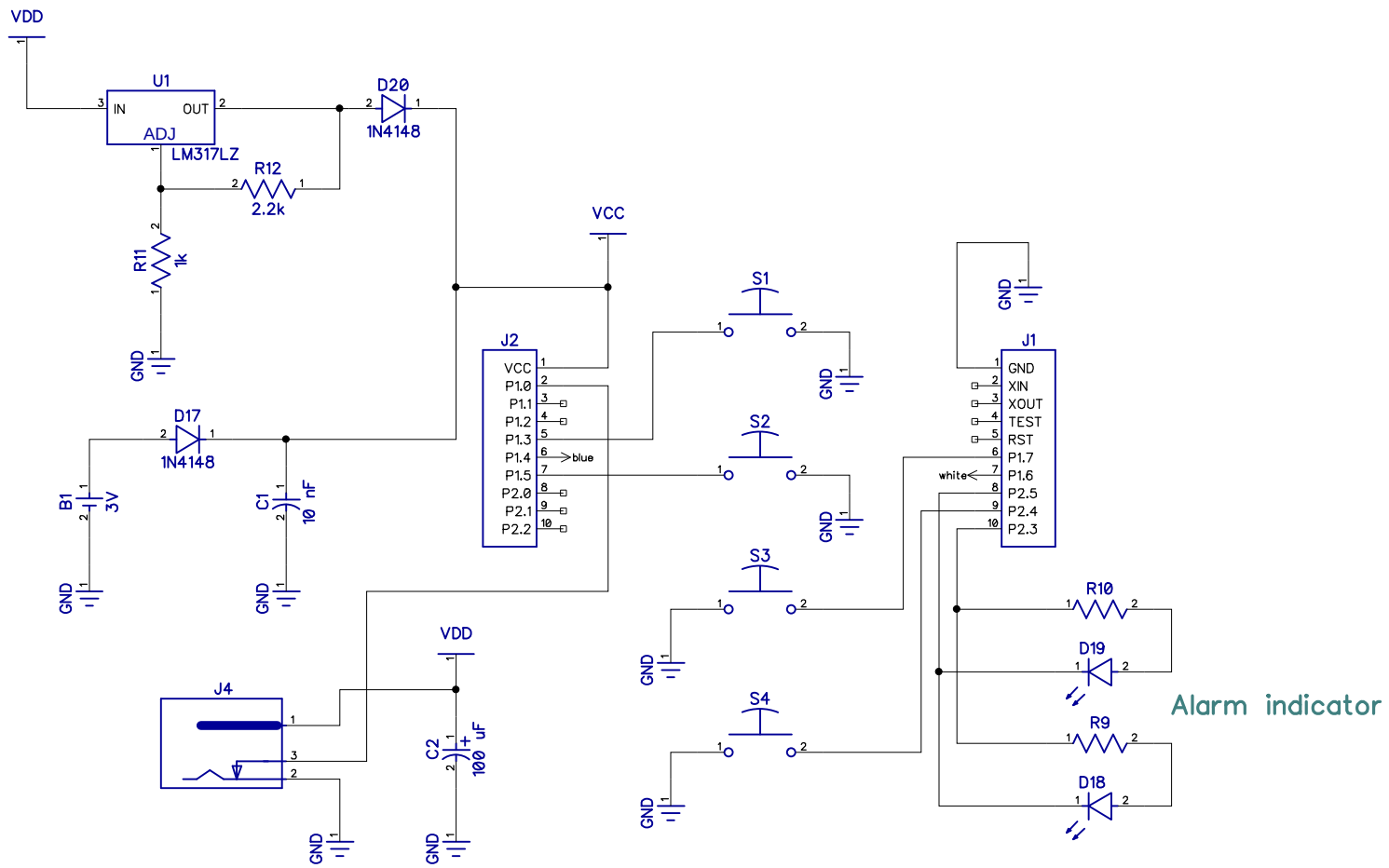


| Wake-up light boosterpack | | | BYOBoosterpack |
|---|---|---|---|
| wakeup-light-boosterpack.dch | Control | Rodney Price | 1 March 2013 |