Manualslib.com - The Global Manuals Library

MIDEA MSY-09HRDN1-QC8 SERVICE MANUAL

Quick Links

Service Manual
Indoor Unit
Specification
Self Clean Function
Indoor Unit Error Display
Diagnosis and Solution
Key Parts Checking

Table of Contents

air conditioner
service manual
Table of Contents
Safety Precaution
Warning
Indoor Unit
Outdoor Unit
Indoor Unit
Outdoor Unit
Wrench torque sheet for installation
Connecting the cables
Pipe length and the elevation
Air purging of the piping and indoor unit
Pumping down (Re-installation)
Re-air purging (Re-installation)
Balance refrigerant of the 2-way, 3-way valves
Evacuation
Gas charging
Abbreviation
Display function
Protection
Fan-Only Mode
Cooling Mode
Drying mode
Heating mode
Auto mode function
Forced operation function
Action of 4-way valve
function
Two speeds outdoor fan function
Timer function
Sleep function mode
Auto-Restart function

Super ionizer function
Self clean function
Follow me function
Outdoor heating cable
Indoor Unit Error Display
Diagnosis and Solution
Key parts checking
Other ManualsLib Projects

Website: www.mideaaircon.com

Service Manual

AIR CONDITIONER

DC Inverter

Split Wall-Mounted Type

Y series

Model	Refrigerant type	Power supply
MSY-09HRDN1-QC8	R410A	1Ph, 220~240V, 50Hz
MSY-12HRDN1-QC4	R410A	1Ph, 220~240V, 50Hz
MSY-09HRDN1-QC2	R410A	1Ph, 220~240V, 50Hz
MSY-12HRDN1-QC2	R410A	1Ph, 220~240V, 50Hz
MSY-18HRDN1-QC2	R410A	1Ph, 220~240V, 50Hz

Downloaded from www.Manualslib.com manuals search engine

CONTENTS

1. Precaution 1
1.1 Safety Precaution 1
1.2 Warning 1

2. Function 3

3. Dimension 6
3.1 Indoor Unit 6
3.2 Outdoor Unit 7

4. Specification 9

5. Refrigerant cycle diagram 10

6. Wiring diagram 13
6.1 Indoor Unit 13
6.2 Outdoor Unit 13

7. Installation details 15
7.1 Wrench torque sheet for installation 16
7.2 Connecting the cables 16
7.3 Pipe length and the elevation 16
7.4 Air purging of the piping and indoor unit 16
7.5 Pumping down (Re-installation) 18
7.6 Re-air purging (Re-installation) 19
7.7 Balance refrigerant of the 2-way, 3-way valves 20
7.8 Evacuation 21
7.9 Gas charging 22

8. Electronic function 23
8.1 Abbreviation 23
8.2 Display function 23
8.3 Protection 24
8.4 Fan-Only Mode 24
8.5 Cooling Mode 25
8.6 Drying mode 26
8.7 Heating mode 26
8.8 Auto mode function 30
8.9 Forced operation function 30
8.10 Action of 4-way valve 30
8.11 Two speeds outdoor fan function 31
8.12 Timer function 31
8.13 Sleep function mode 31

Downloaded from www.Manualslib.com manuals search engine

8.14 Auto-Restart function 32
8.15 Super ionizer function 29
8.16 Self clean function 29
8.17 Follow me function 30
8.18 Outdoor heating cable function 30

9. Troubleshooting 33
9.1 Indoor Unit Error Display 35
9.2 Diagnosis and Solution 36
9.3 Key parts checking 40

Downloaded from www.Manualslib.com manuals search engine

1. Precaution

1.1 Safety Precaution

n To prevent injury to the user or other people and property damage, the following instructions must be followed.

n Incorrect operation due to ignoring instruction will cause harm or damage.

n Before service unit, be sure to read this service manual at first.

1.2 Warning

Ø Installation

n Do not use a defective or underrated circuit breaker. Use this appliance on a dedicated circuit.

There is risk of fire or electric shock.

n For electrical work, contact the dealer, seller, a qualified electrician, or an Authorized service center.

Do not disassemble or repair the product, there is risk of fire or electric shock.

n Always ground the product.

There is risk of fire or electric shock.

n Install the panel and the cover of control box securely.

There is risk of fire of electric shock.

n Always install a dedicated circuit and breaker.

Improper wiring or installation may cause fore or electric shock.

n Use the correctly rated breaker of fuse.

There is risk of fire or electric shock.

n Do not modify or extend the power cable.

There is risk of fire or electric shock.

n Do not install, remove, or reinstall the unit by yourself (customer).

There is risk of fire, electric shock, explosion, or injury.

n Be caution when unpacking and installing the product.

Sharp edges could cause injury, be especially careful of the case edges and the fins on the condenser and evaporator.

n For installation, always contact the dealer or an Authorized service center.

There is risk of fire, electric shock, explosion, or injury.

n Do not install the product on a defective installation stand.

It may cause injury, accident, or damage to the product.

n Be sure the installation area does not deteriorate with age.

If the base collapses, the air conditioner could fall with it, causing property damage, product failure, and personal injury.

n Do not let the air conditioner run for a long time when the humidity is very high and a door or a window is left open.

Moisture may condense and wet or damage furniture.

n Take care to ensure that power cable could not be pulled out or damaged during operation.

There is risk of fire or electric shock.

n Do not place anything on the power cable.

There is risk of fire or electric shock.

n Do not plug or unplug the power supply plug during operation.

There is risk of fire or electric shock.

n Do not touch (operation) the product with wet hands.

There is risk of fire or electric shock.

n Do not place a heater or other appliance near the power cable.

There is risk of fire and electric shock.

n Do not allow water to run into electric parts.

It may cause fire, failure of the product, or electric shock.

n Do not store or use flammable gas or combustible near the product.

There is risk of fire or failure of product.

n Do not use the product in a tightly closed space for a long time.

Oxygen deficiency could occur.

n When flammable gas leaks, turn off the gas and open a window for ventilation before turn the product on.

Do not use the telephone or turn switches on or off.

There is risk of explosion or fire.

n If strange sounds, or small or smoke comes from product. Turn the breaker off or

Downloaded from www.Manualslib.com manuals search engine

disconnect the power supply cable.

There is risk of electric shock or fire.

n Stop operation and close the window in storm or hurricane. If possible, remove the product from the window before the hurricane arrives.

There is risk of property damage, failure of product, or electric shock.

n Do not open the inlet grill of the product during operation. (Do not touch the electrostatic filter, if the unit is so equipped.)

There is risk of physical injury, electric shock, or product failure.

n When the product is soaked (flooded or submerged), contact an Authorized service center.

There is risk of fire or electric shock.

n Be caution that water could not enter the product.

There is risk of fire, electric shock, or product damage.

n Ventilate the product from time to time when operating it together with a stove, etc.

There is risk of fire or electric shock.

n Turn the main power off when cleaning or maintaining the product.

There is risk of electric shock.

n When the product is not be used for a long time, disconnect the power supply plug or turn off the breaker.

There is risk of product damage or failure, or unintended operation.

n Take care to ensure that nobody could step on or fall onto the outdoor unit.

This could result in personal injury and product damage.

Ø CAUTION

n Always check for gas (refrigerant) leakage after installation or repair of product.

Low refrigerant levels may cause failure of product.

n Install the drain hose to ensure that water is drained away properly.

A bad connection may cause water leakage.

n Keep level even when installing the product.

To avoid vibration or water leakage.

n Do not install the product where the noise or hot air from the outdoor unit could damage the neighborhoods.

It may cause a problem for your neighbors.

n Use two or more people to lift and transport the product.

Avoid personal injury.

n Do not install the product where it will be exposed to sea wind (salt spray) directly.

It may cause corrosion on the product. Corrosion, particularly on the condenser and evaporator fins, could cause product malfunction or inefficient operation.

Ø Operational

n Do not expose the skin directly to cool air for long periods of time. (Do not sit in the draft).

This could harm to your health.

n Do not use the product for special purposes, such as preserving foods, works of art, etc. It is a consumer air conditioner, not a precision refrigerant system.

There is risk of damage or loss of property.

n Do not block the inlet or outlet of air flow.

It may cause product failure.

n Use a soft cloth to clean. Do not use harsh detergents, solvents, etc.

There is risk of fire, electric shock, or damage to the plastic parts of the product.

n Do not touch the metal parts of the product when removing the air filter. They are very sharp.

There is risk of personal injury.

n Do not step on pr put anything on the product. (outdoor units)

There is risk of personal injury and failure of product.

n Always insert the filter securely. Clean the filter every two weeks or more often if necessary.

A dirty filter reduces the efficiency of the air conditioner and could cause product malfunction or damage.

n Do not insert hands or other object through air inlet or outlet while the product is operated.

There are sharp and moving parts that could cause personal injury.

n Do not drink the water drained from the

Downloaded from www.Manualslib.com manuals search engine

product.

It is not sanitary could cause serious health issues.

- Use a firm stool or ladder when cleaning or maintaining the product.

Be careful and avoid personal injury.

- Replace the all batteries in the remote control with new ones of the same type. Do not mix old and mew batteries or different types of batteries.

There is risk of fire or explosion.

- Do not recharge or disassemble the batteries. Do not dispose of batteries in a fire.

They may burn of explode.

- If the liquid from the batteries gets onto your skin or clothes, wash it well with clean water. Do not use the remote of the batteries have leaked.

The chemical in batteries could cause burns or other health hazards

Downloaded from www.Manualslib.com manuals search engine

2. Function

Indoor unit

- **Operation by remote**
- **Sensing by room**

  Room temperature sensor.
- **Room temperature**

  Maintain the room temperature in accordance with the setting temperature.
- **Anti-freezing control in**

  Prevent the water being frozen on evaporator by sensing the evaporator pipe temperature in
- **Time Delay Safety**

  Restarting is for approx. 3
- **Indoor fan speed control**

  Turbo, high, med, low, breeze.
- **Two-direction air vane**

  The unit will decide the louver direction according to
- **Sleep mode auto control**

  The fan is turn to low speed (cooling/heating).
- **Independent**

  The function is usually used in rainy days in springtime or damp areas.
- **Air flow Direction control**

  The louver can be set at the desired position or swing up and down
- **Auto mode**

  The mode can be change by the room temperature
- **Temp. Compensation**
- **Golden fin**
- **Compact**
- **Super Ionizer**
- **Self clean**
- **Follow**
- **Self-diag. function**
- **Anti-cold function**

  Prevent the cold wind at the beginning of unit start.
- **Auto defrost**
- **Auto-restart function**

  When the power supply is interrupted and then restore, the air conditioners automatically restore the previous function setting.
- **Flexible wiring**

Downloaded from www.Manualslib.com manuals search engine

Outdoor unit

Power relay control

The unit has 3 mins delay between continuously ON/OFF operations

Low noise air flow system

Bird tail propeller fan makes the outdoor unit run more quietly.

Hydrophilic aluminum fin

The hydrophilic fin can improve the heating efficiency at operation mode

4 way valve control

It is only operated in the heating operation mode except defrosting operation

Anti-rust cabinet

Made from electrolytic zinc steel sheet and anti-rust coated components

Valve protection cover

It protects the valves and prevents water from dripping

Discharge pipe temperature

Heating cable

Driving heating at -15

Downloaded from www.Manualslib.com manuals search engine

3. Dimension

3.1 Indoor Unit

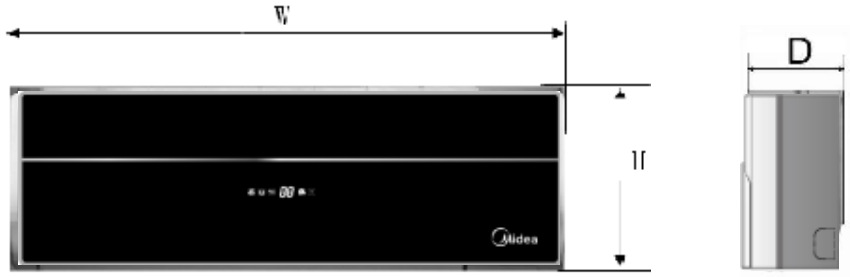

Model \ Dimension	W	H	D
MSY-09HRDN1-QC2	850	275	160
MSY-09HRDN1-QC8	900	285	160
MSY-12HRDN1-QC2			
MSY-12HRDN1-QC4			
MSY-18HRDN1-QC2	1022	295	185

Downloaded from www.Manualslib.com manuals search engine

3.2 Outdoor Unit

MOA-09HDN1-QC2

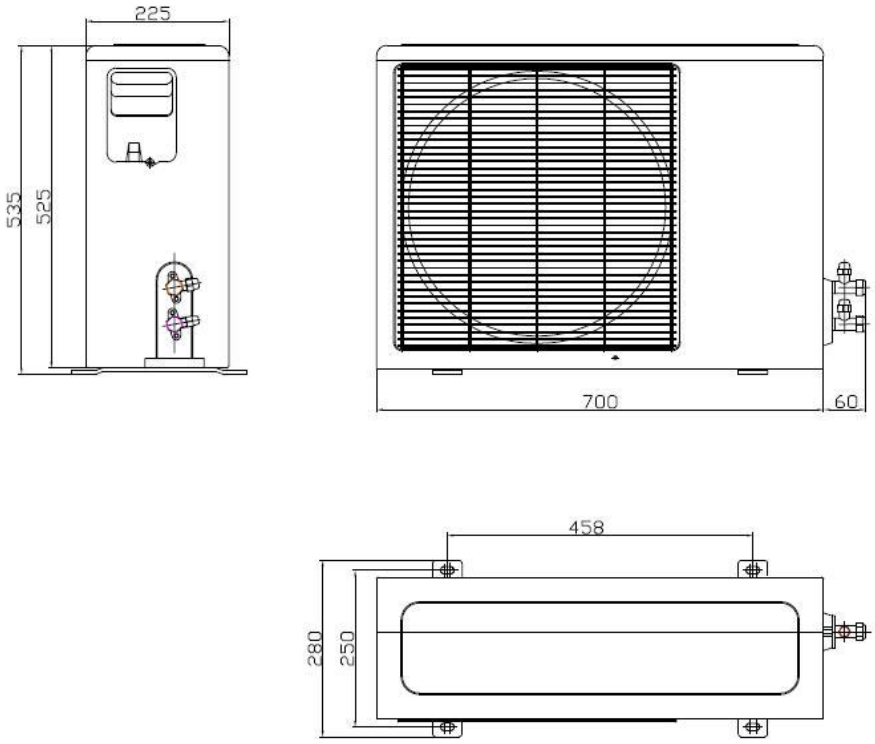

MOB4-12HDN1-QC2

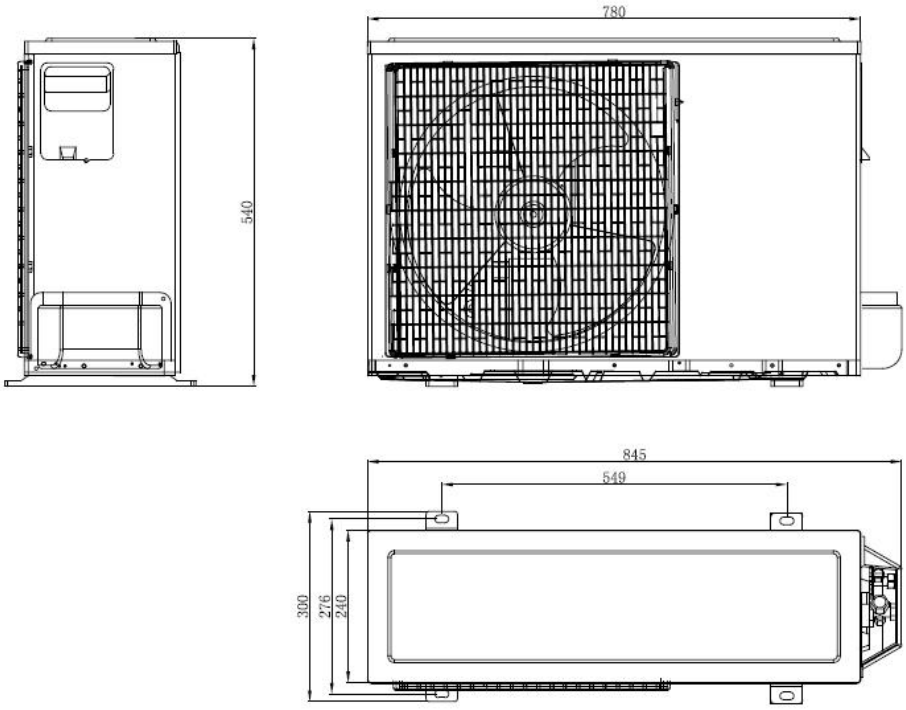

Downloaded from www.Manualslib.com manuals search engine

MOC-09HDN1-QC8, MOC-12HDN1-QC4, MOC-18HDN1-QC2

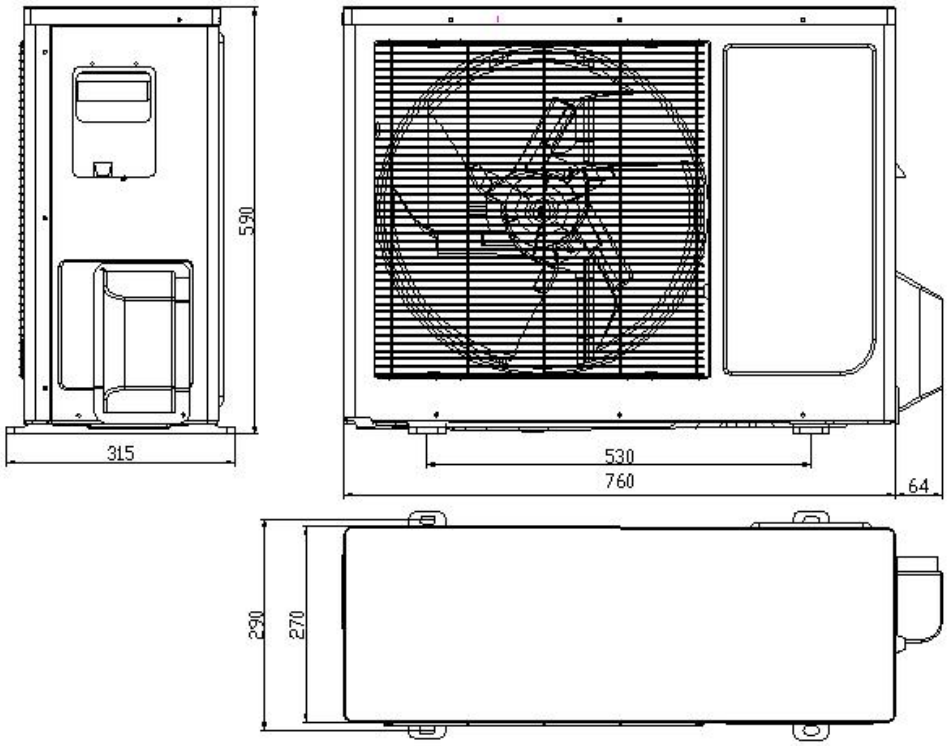

Downloaded from www.Manualslib.com manuals search engine

4. Specification

Model			MSY-09HRDN1-QC8	MSY-12HRDN1-QC4
Indoor			MSY-09HRDN1-QC8	MSY-12HRDN1-QC4
Outdoor			MOC-09HDN1-QC8	MOC-12HDN1-QC4
Power supply		Ph-V-Hz	1,220-240V~,50Hz	1,220-240V~,50Hz
Cooling	Capacity	Btu/h	9000(3100~11500)	12000(3800~14800)
	Input	W	690(280~1100)	1030(360~1480)
	Rated current	A	3.1(1.3~4.8)	4.6(1.6~6.5)
	EER	W/W	3.82	3.41
Heating	Capacity	Btu/h	10000(3300~12500)	13000(4000~15500)
	Input	W	690(300~1150)	1000(340~1450)
	Rated current	A	3.1(1.4~5.0)	4.5(1.7~6.4)
	COP	W/W	4.25	3.81
Max. input consumption		W	1750	1950
Max. current		A	8.0	9.0
Starting current		A	5.0	7.0
Compressor	Model		DA108X1C-20FZ3	DA108X1C-20FZ3
	Type		Rotary	Rotary
	Brand		TOSHIBA	TOSHIBA
	Capacity	Btu/h	10918	10918
	Input	W	855	855
	Thermal protector		CS-74	CS-74
	Capacitor	uF	No	No
	Refrigerant oil	ml	480	480
Indoor fan motor	Model		RPG20D	RPG20D
	Brand		Welling	Welling
	Input	W	43	43
	Capacitor	uF	1.5	1.5
	Speed	r/min	1290/1250/1000/900/700	1290/1250/1000/900/700
Indoor air flow (Hi/Mi/Lo)		m3/h	600/500/400	600/500/400
Indoor noise level (Hi/Mi/Lo)		dB(A)	38/34/28	38/34/28
Indoor unit	Dimension (W*H*D)	mm	900×285×160	900×285×160
	Packing (W*H*D)	mm	990×375×250	990×375×250
	Net/Gross weight	Kg	9.0/11.5	9.0/11.5
Outdoor fan motor	Model		YDK24-6G	YDK24-6G
	Brand		Welling	Welling
	Input	W	59	59
	Capacitor	uF	2.5	2.5
	Speed	r/min	800/550	800/550
Outdoor air flow		m3/h	2000	2000
Outdoor noise level		dB(A)	54	54
Outdoor unit	Dimension(W*H*D)	mm	760×590×285	760×590×285
	Packing (W*H*D)	mm	887×655×355	887×655×355

Downloaded from www.Manualslib.com manuals search engine

	Net/Gross weight	Kg	40.5/43	40.5/43
Refrigerant type R410A		g	1100	1100
Design pressure		MPa	4.2	4.2
Refrigerant piping	Liquid side/ Gas side	mm	Φ6.35/Φ9.53	Φ6.35/Φ12.7
	Max. refrigerant pipe length	m	20	20
	Max. difference in level	m	8	8
Connection wiring			No	No
Plug type			16A	16A
Thermostat type			Electronic control	Electronic control
Operation temp		℃	17 ~ 30	17 ~ 30
Ambient temp		℃	-15 ~ 50	-15 ~ 50
Application area		m2	16-24	28 ~ 40
Qty' per 20' /40' /40'HQ		Set	92/184/225	92/184/225

Model			MSY-09HRDN1-QC2	MSY-12HRDN1-QC2	MSY-18HRDN1-QC2
Indoor			MSY-09HRDN1-QC2	MSY-12HRDN1-QC2	MSY-18HRDN1-QC2
Outdoor			MOA-09HDN1-QC2	MOB4-12HDN1-QC2	MOC-18HDN1-QC2
Power supply		Ph-V-Hz	1,220-240V~,50Hz	1,220-240V~,50Hz	1,220-240V~,50Hz
Cooling	Capacity	Btu/h	9000(3300~11200)	12000(4100~13800)	17000(6000~20000)
	Input	W	810(240~1200)	1080(360~1400)	1550(530~2040)
	Rated current	A	3.6(1.2~5.3)	4.9(1.8~6.5)	6.8(2.4~9.2)
	EER	W/W	3.26	3.26	3.22
Heating	Capacity	Btu/h	10000(4000~13000)	13000(4200~14500)	18000(6400~22000)
	Input	W	810(240~1250)	1050(350~1420)	1460(480~2000)
	Rated current	A	3.6(1.2~5.6)	4.6(1.7~6.6)	6.5(2.3~9.0)
	COP	W/W	3.62	3.63	3.61
Max. input consumption		W	1750	1950	2950
Max. current		A	8.0	9.0	13.5
Starting current		A	5.5	7.5	10
Compressor	Model		DA89X1C-23EZD1	DA89X1C-23FZ	5RS132ZAD21
	Type		Rotary	Rotary	Rotary
	Brand		TOSHIBA	TOSHIBA	Panasonic
	Capacity	Btu/h	8803	9040	3385
	Input	W	685	680	1250
	Thermal protector		CS-74	CS-74	1NT11L-5270 L115-15
	Capacitor	uF	No	No	No
	Refrigerant oil	ml	370	370	370
Indoor fan	Model		RPG13G	RPG20D	RPG28D

Downloaded from www.Manualslib.com manuals search engine

motor	Brand		Welling	Welling	Welling
	Input	W	34	43	51
	Capacitor	uF	1.2	1.5	1.5
	Speed	r/min	1250/1200/1050/850/700	1280/1250/1050/900/750	1280/1260/1080/900/75
Indoor air flow (Hi/Mi/Lo)		m3/h	480/420/320	600/500/400	870/730/520
Indoor noise level (Hi/Mi/Lo)		dB(A)	37/33/27	38/34/28	42/37/32
Indoor unit	Dimension (W*H*D)	mm	850×275×160	900×285×160	1022×295×185
	Packing (W*H*D)	mm	940×360×250	990×375×250	1105×385×275
	Net/Gross weight	Kg	8.5/11	9/11.5	12/15.5
Outdoor fan motor	Model		YDK24-6K	YDK24-6G	YDK50-6C
	Brand		Welling	Welling	Welling
	Input	W	63/49	59/47	111/96
	Capacitor	uF	2.5	2.5	2.5
	Speed	r/min	815/590	800/550	890/540
Outdoor air flow		m3/h	1800	2000	2200
Outdoor noise level		dB(A)	53	54	56
Outdoor unit	Dimension(W*H*D)	mm	700×535×235	780×540×250	760×590×285
	Packing (W*H*D)	mm	815×580×325	910×575×335	887×655×355
	Net/Gross weight	Kg	28/30	39.5/42	40/42.5
Refrigerant type R410A		g	700	1050	1100
Design pressure		MPa	4.2	4.2	4.2
Refrigerant piping	Liquid side/ Gas side	mm	Φ6.35/Φ9.53	Φ6.35/Φ12.7	Φ6.35/Φ12.7
	Max. refrigerant pipe length	m	20	20	25
	Max. difference in level	m	8	8	10
Connection wiring			No	No	No
Plug type			16A	16A	No plug
Thermostat type			Electronic control	Electronic control	Electronic control
Operation temp		℃	17 ~ 30	17 ~ 30	17 ~ 30
Ambient temp		℃	-15 ~ 50	-15 ~ 50	-15 ~ 50
Application area		m2	16-24	20-30	28 ~ 40
Qty' per 20' /40' /40'HQ		Set	130/270/300	110/230/265	90/195/220

Downloaded from www.Manualslib.com manuals search engine

5. Refrigerant cycle diagram

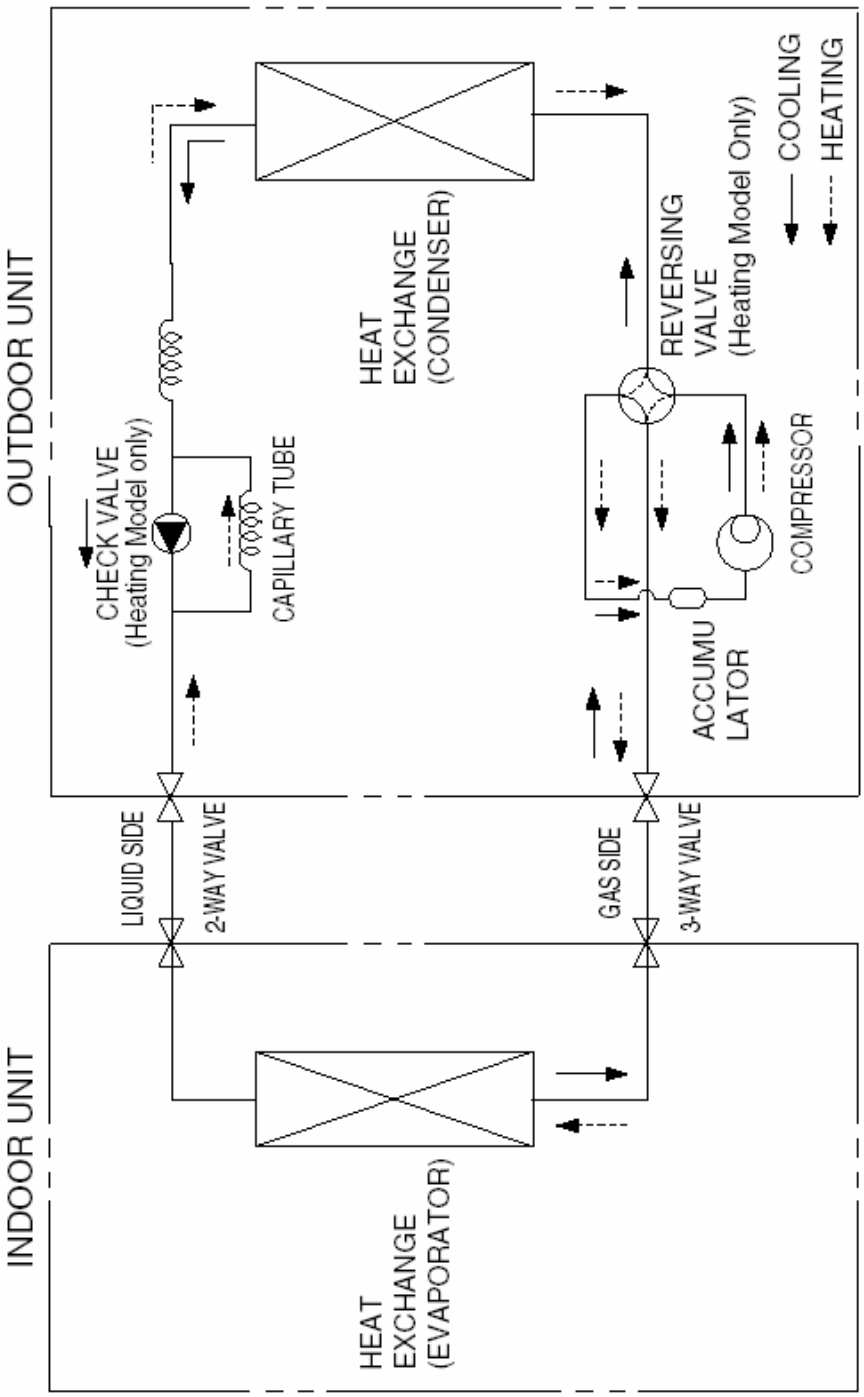

Downloaded from www.Manualslib.com manuals search engine

6. Wiring diagram

6.1 Indoor Unit

MSY-09HRDN1-QC8, MSY-12HRDN1-QC4, MSY-09HRDN1-QC2, MSY-12HRDN1-QC2,

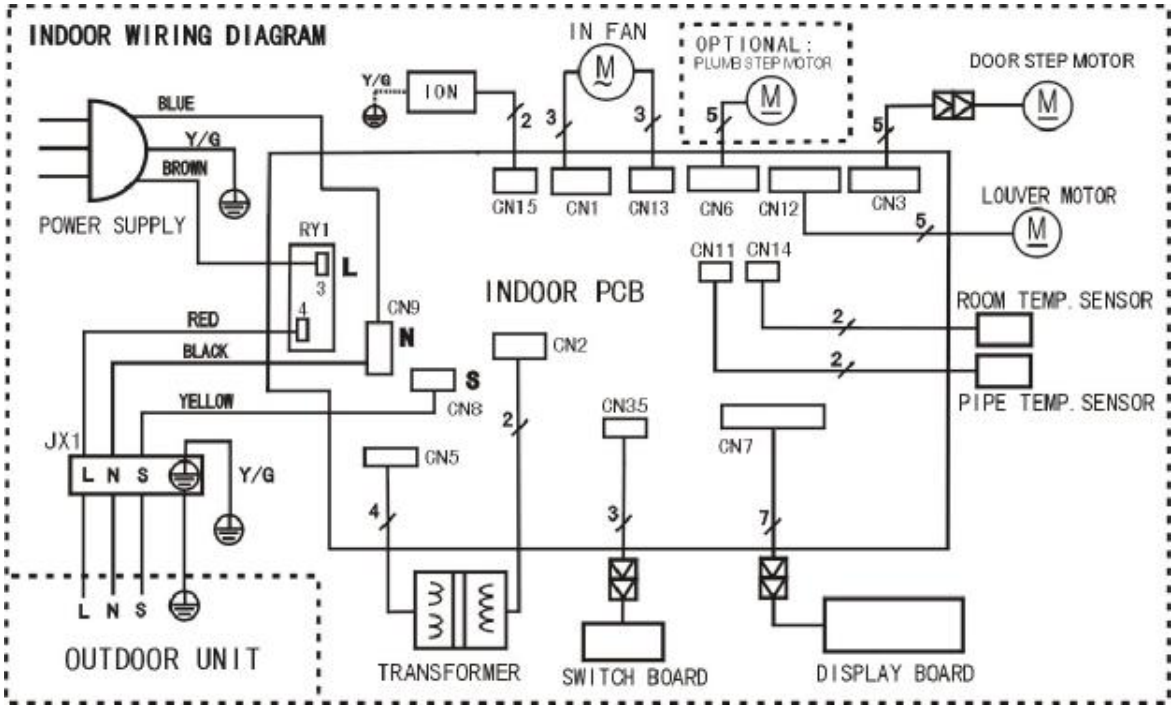

MSY-18HRDN1-QC2

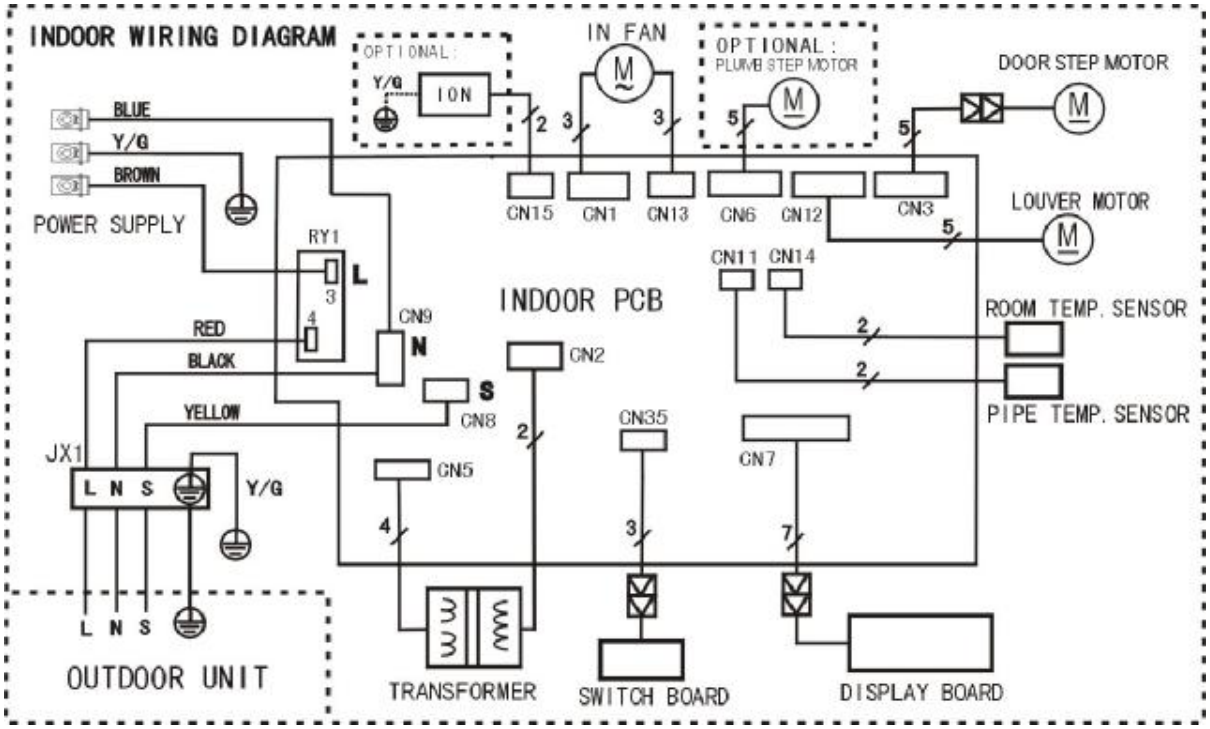

Downloaded from www.Manualslib.com manuals search engine

6.2 Outdoor Unit

MOC-09HDN1-QC8, MOC-12HDN1-QC4

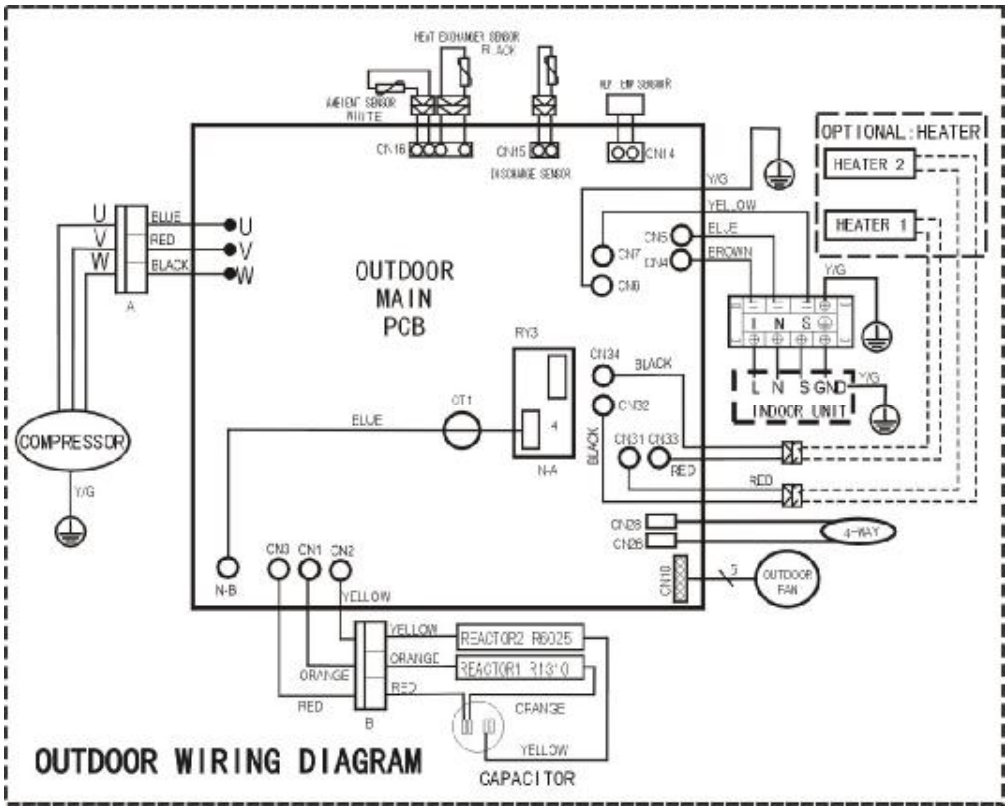

MOA-09HDN1-QC2

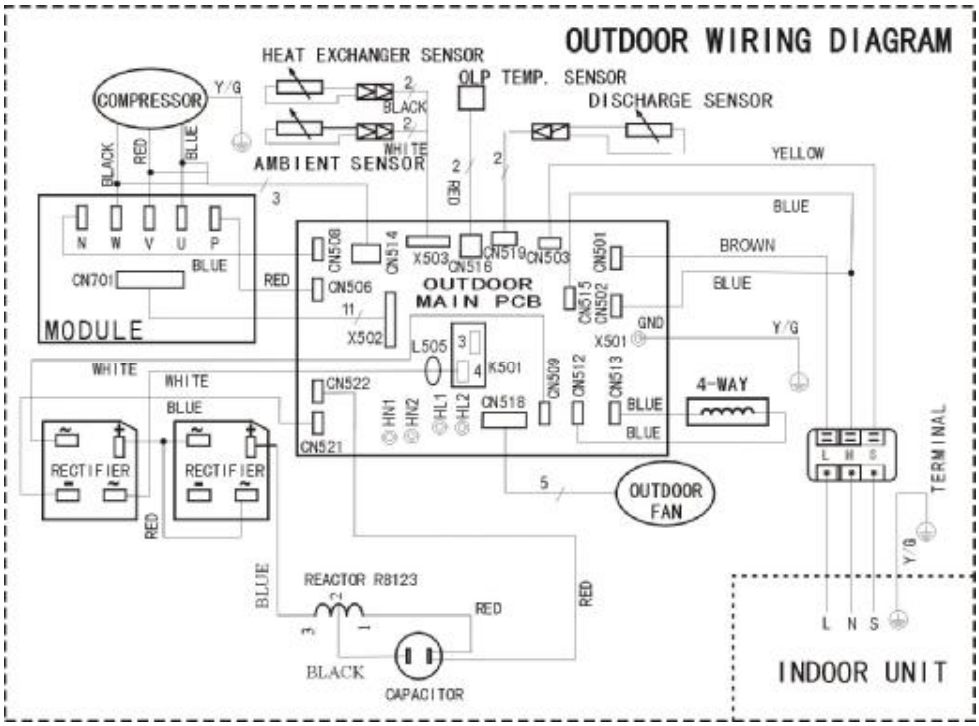

Downloaded from www.Manualslib.com manuals search engine

MOB4-12HDN1-QC2

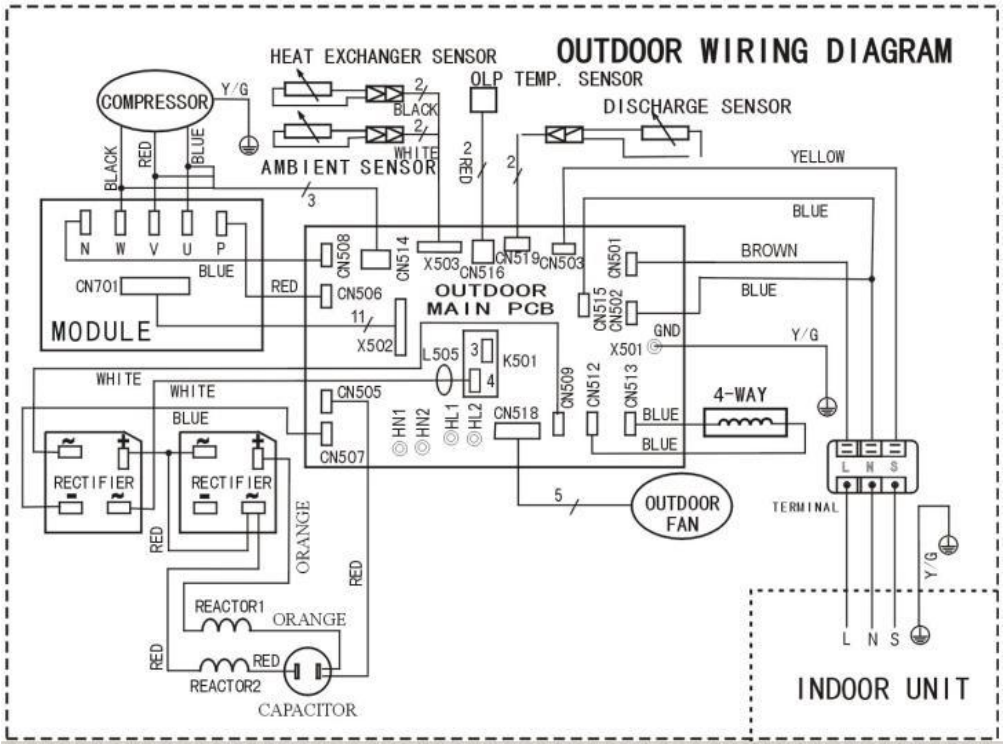

MOC-18HDN1-QC2

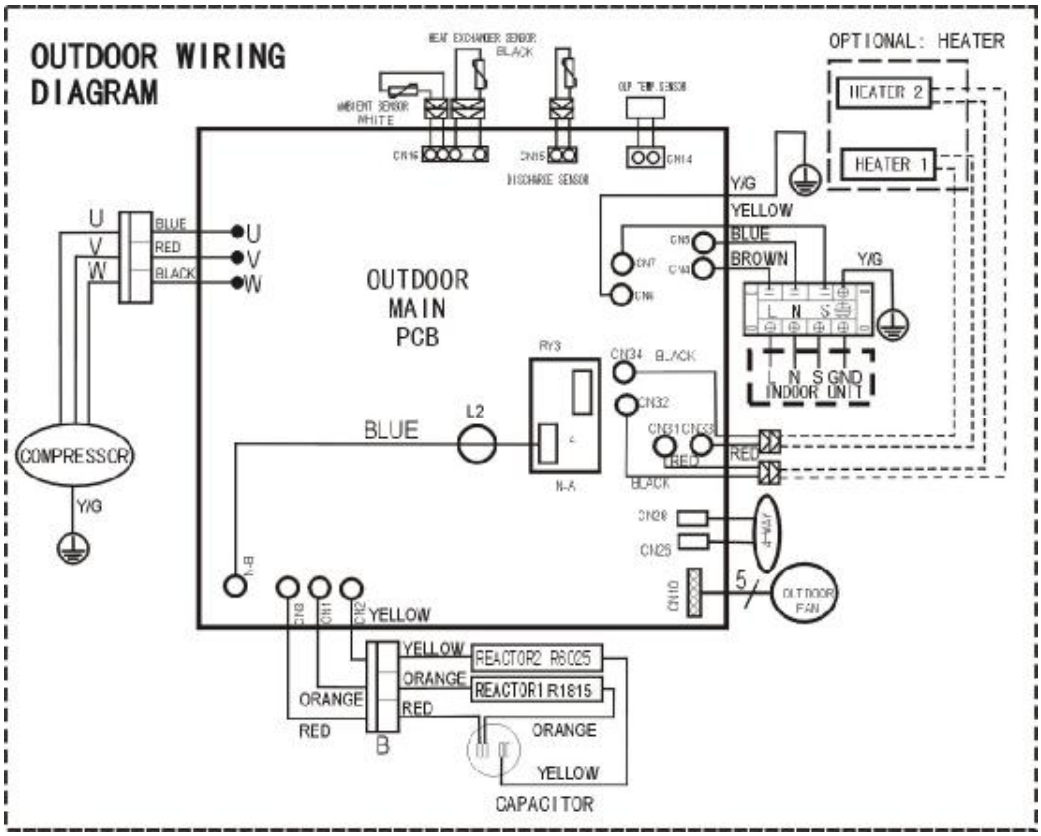

Downloaded from www.Manualslib.com manuals search engine

7. Installation details

7.1 Wrench torque sheet for installation

Outside diameter		Torque
mm	inch	Kgf.m
Φ6.35	1/4	1.8
Φ9.52	3/8	4.2
Φ12.7	1/2	5.5

7.2 Connecting the cables

The power cord of connect should be selected according to the following specifications sheet.

	Grade		
Unit	9K	12K	18K
mm^2	1.5	1.5	2.5

7.3 Pipe length and the elevation

Capacity Btu/h	Pipe size		Standard length (m)	Max. Elevation B (m)	Max. Length A (m)	Additional refrigerant (g/m)
	Gas	Liquid				
9k	3/8'' (Φ9.52)	1/4'' (Φ6.35)	5	8	20	30
12k	1/2'' (Φ12.7)	1/4'' (Φ6.35)	5	10	25	30
18k	1/2'' (Φ12.7)	1/4'' (Φ6.35)	5	10	25	30

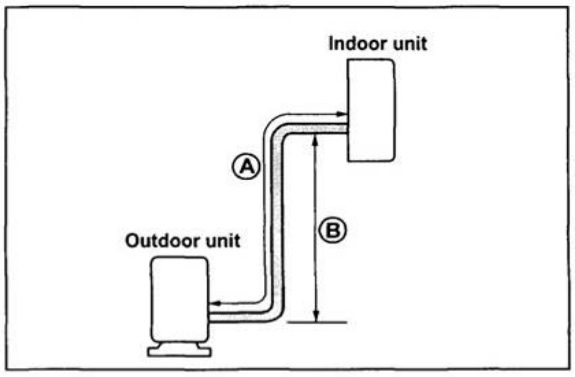

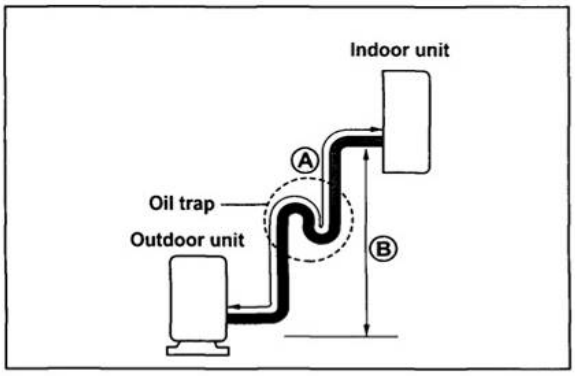

Caution:
Capacity is based on standard length and maximum allowance length is base of reliability.
Oil trap should be installed per 5-7 meters.

7.4 Air purging of the piping and indoor unit

Required tools:
Hexagonal wrench; adjustable wrench; torque wrenches, wrench to hold the joints and gas leak detector.

Downloaded from www.Manualslib.com manuals search engine

Note:

The air in the indoor unit and in the piping must be purged. If air remains in the refrigeration piping, it will affect the compressor, reduce the cooling capacity, and could lead to a malfunction of unit.

Be sure, using a torque wrench to tighten the service port cap (after using the service port), so that it prevents the gas leakage from the refrigeration cycle.

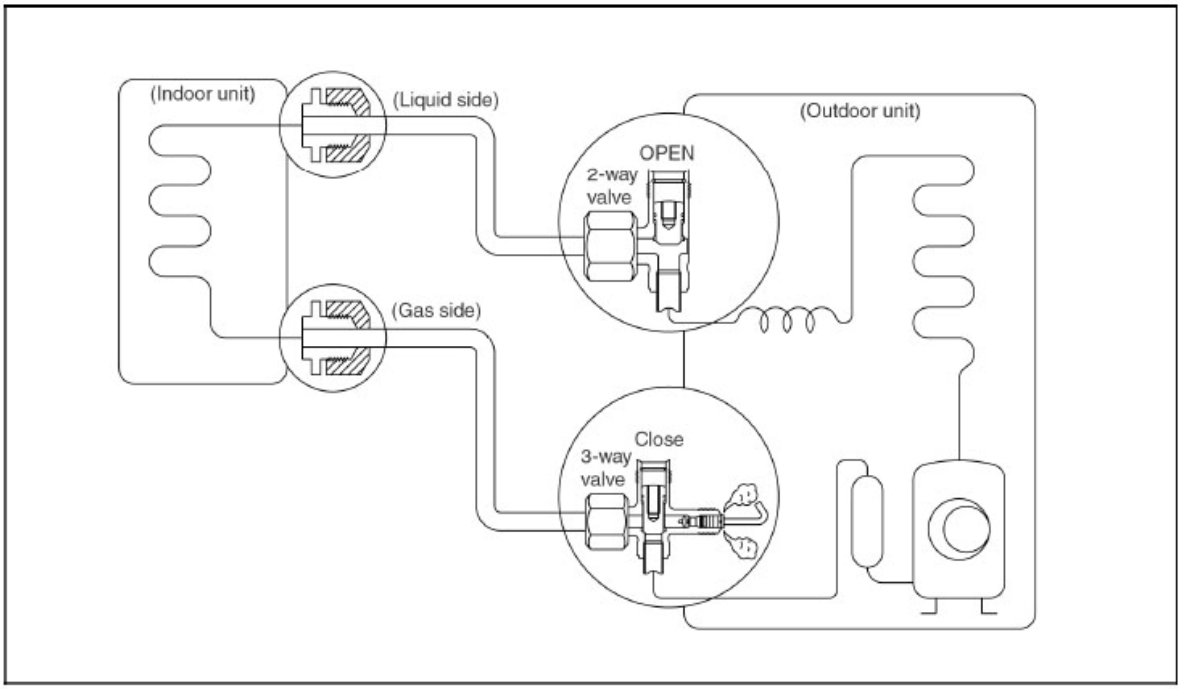

Procedure

1. Recheck the piping connections.
2. Open the valve stem of the 2-way valve counterclockwise approximately 90', wait 10 seconds, and then set it to closed position.

Be sure to use a hexagonal wrench to operate the valve stem.

3. Check for gas leakage.

Check the flare connection for gas leakage

4. Purge the air from the system.

Set the 2-way valve to the open position and remove the cap from the 3-way valve's service port.

Using the hexagonal wrench to press the valve core pin, discharge for three seconds and then wait for one minute.

5. Use torque wrench to tighten the service port cap to a torque of 1.8 kgf.m. (18n.m)
6. Set the 3-way valve to the opened position.
7. Mounted the valve stem nuts to the 2-way and 3-way valves.
8. Check for gas leakage.

At this time, especially check for gas leakage from the 2-way and 3-way stem nuts, and from the service port.

Caution:

If gas leakage is discovered in step (3) above, take the following measures.

If the leaks stop when the piping connections are tightened further, continue working from step (4).

If the gas leaks do not stop when the connections are retightened, repair the location of the leak, discharge all of the gas through the service port, and then recharge with the specified amount of gas from a gas cylinder.

Downloaded from www.Manualslib.com manuals search engine

7.5 Pumping down (Re-installation)

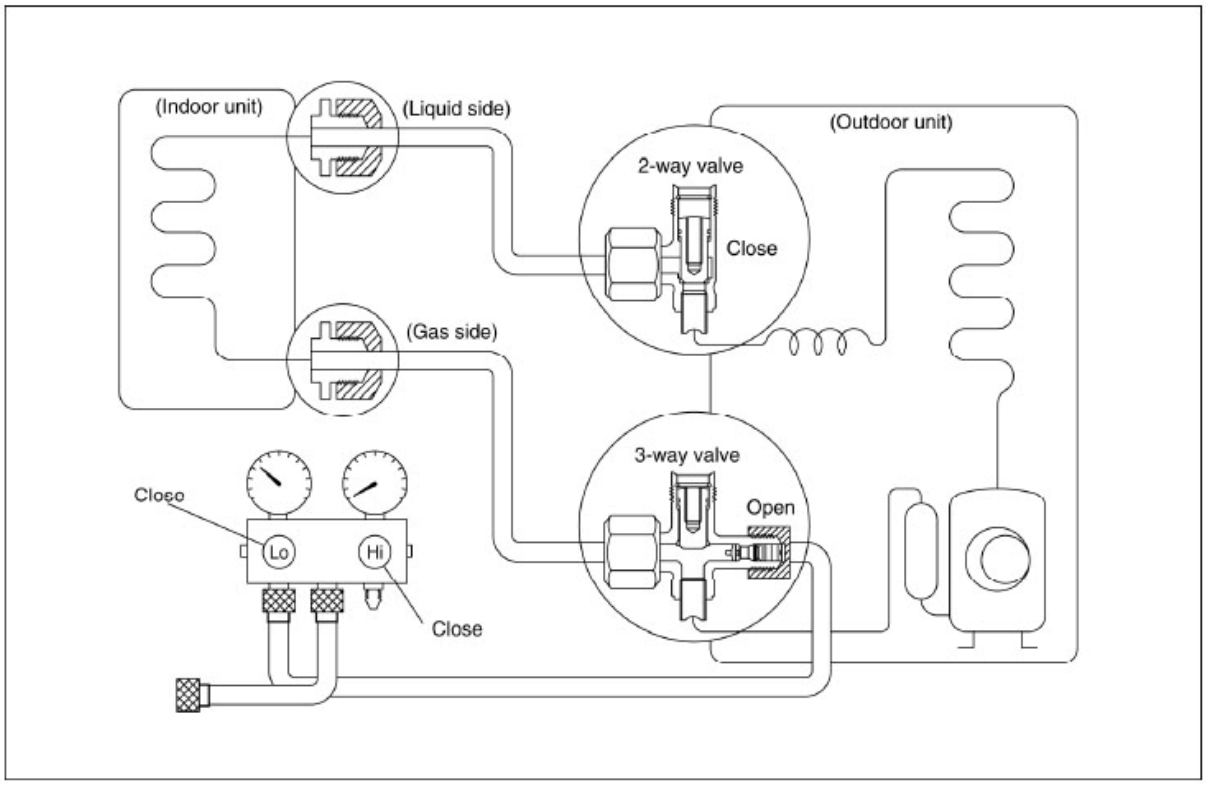

Procedure

1. Confirm that both the 2-way and 3-way valves are set to the opened position.

Remove the valve stem caps and confirm that the valve stems are in the opened position.

Be sure to use a hexagonal wrench to operate the valve stems.

2. Operate the unit for 10 to 15 minutes.

3. Stop operation and wait for 3 minutes, then connect the charge set to the service port of the 3-way valve.

Connect the charge hose with the push pin to the gas service port.

5. Air purging of the charge hose.

Open the low-pressure valve on the charge set slightly to purge air from the charge hose.

6. Set the 2-way valve to the close position.

7. Operate the air conditioner at the cooling cycle and stop it when the gauge indicates 0.1MPa.

8. Immediately set the 3-way valve to the closed position.

Do this quickly so that the gauge ends up indicating 0.3 to 0.5Mpa.

Disconnect the charge set, and amount the 2-way and 3-way valve's stem nuts and service port caps.

Use a torque wrench to tighten the service port cap to a torque of 1.8 kgf.m.

Be sure to check for gas leakage.

Downloaded from www.Manualslib.com manuals search engine

7.6 Re-air purging (Re-installation)

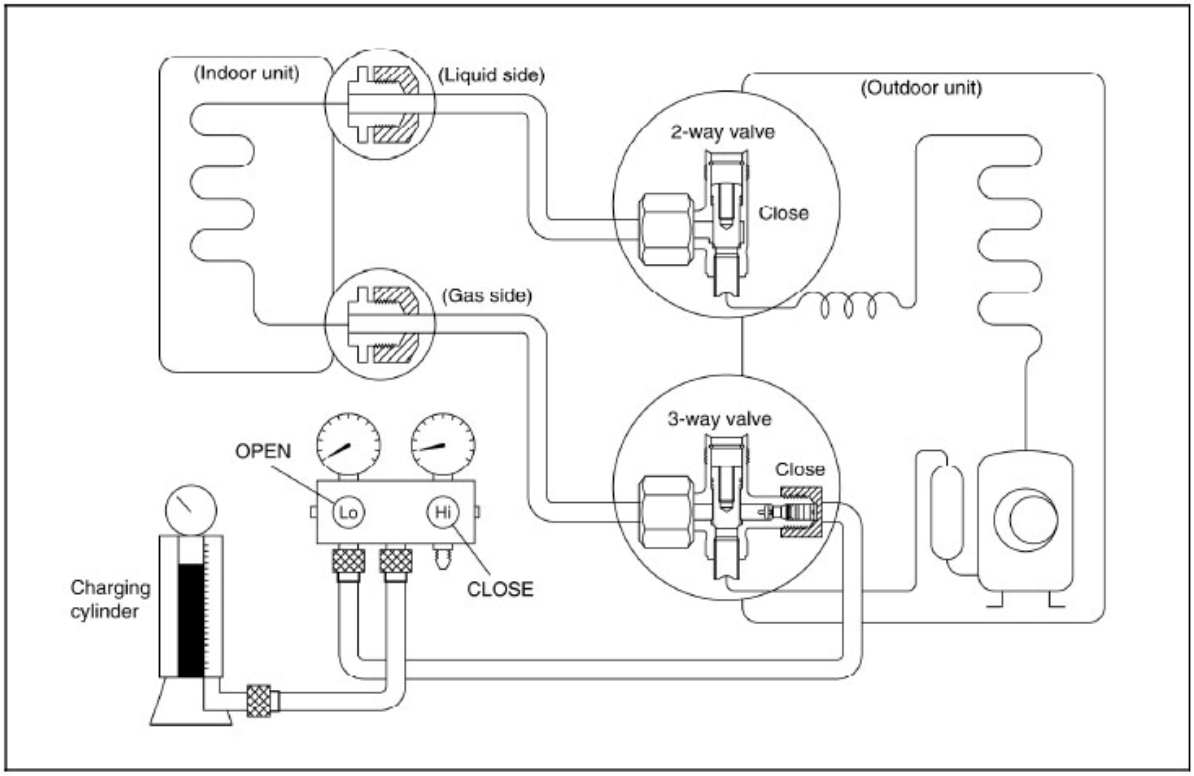

Procedure:

1. Confirm that both the 2-way and 3-way valves are set to the closed position.
2. Connect the charge set and a charging cylinder to the service port of the 3-way valve.

Leave the valve on the charging cylinder closed.

3. Air purging.

Open the valves on the charging cylinder and the charge set. Purge the air by loosening the flare nut on the 2-way valve approximately 45' for 3 seconds then closing it for 1 minute; repeat 3 times. After purging the air, use a torque wrench to tighten the flare nut to on the 2-way valve.

4. Check the gas leakage.

Check the flare connections for gas leakage.

5. Discharge the refrigerant.

Close the valve on the charging cylinder and discharge the refrigerant until the gauge indicates 0.3 to 0.5 Mpa.

6. Disconnect the charge set and the charging cylinder, and set the 2-way and 3-way valves to the open position.

Be sure to use a hexagonal wrench to operate the valve stems.

7. Mount the valve stems nuts and the service port cap.

Be sure to use a torque wrench to tighten the service port cap to a torque 18N.m.

Be sure to check the gas leakage.

Downloaded from www.Manualslib.com manuals search engine

7.7 Balance refrigerant of the 2-way, 3-way valves

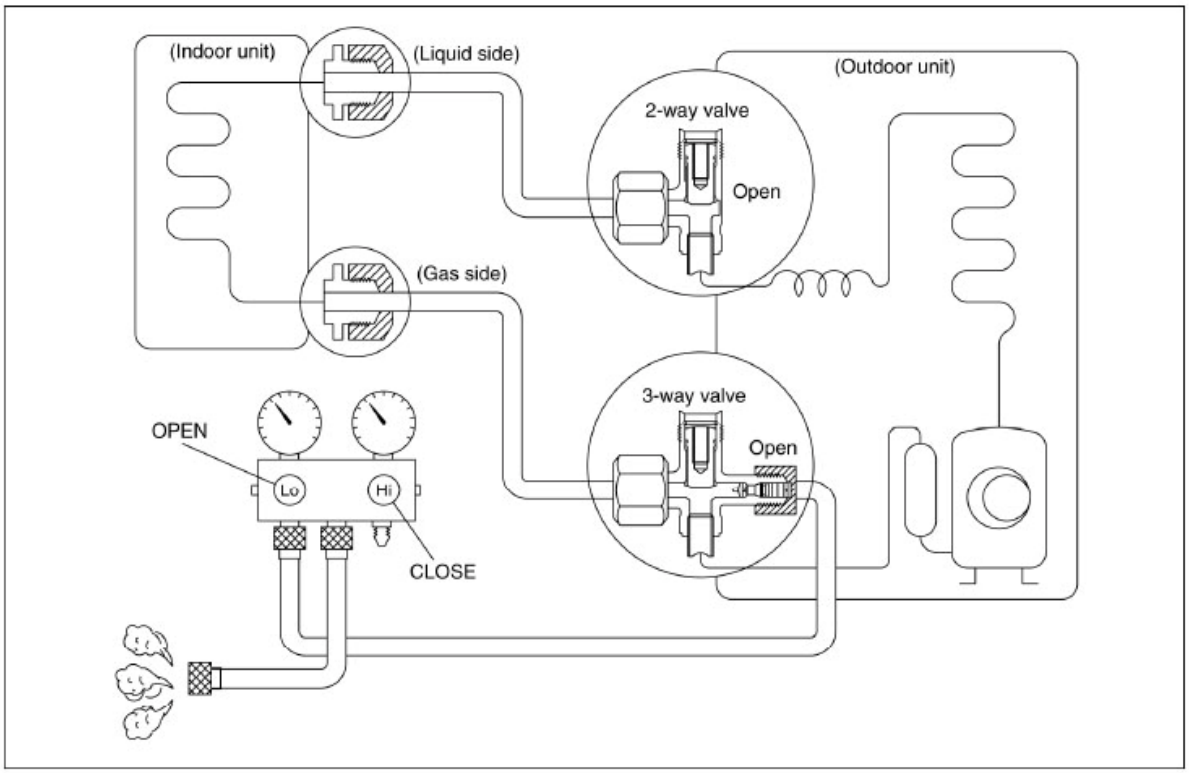

Procedure:

1. Confirm that both the 2-way and 3-way valves are set to the open position.
2. Connect the charge set to the 3-way valve's service port.

Leave the valve on the charge set closed.

Connect the charge hose with the push pin to the service port.

3. Open the valves (Low side) on the charge set and discharge the refrigerant until the gauge indicates 0.05 to 0.1Mpa.

If there is no air in the refrigeration cycle [the pressure when the air conditioner is not running is higher than 0.1Mpa, discharge the refrigerant until the gauge indicates 0.05 to 0.1 Mpa. If this is the case, it will not be necessary to apply an evacuation.

Discharge the refrigeration gradually; if it is discharged too suddenly, the refrigeration oil still be discharged.

Downloaded from www.Manualslib.com manuals search engine

7.8 Evacuation

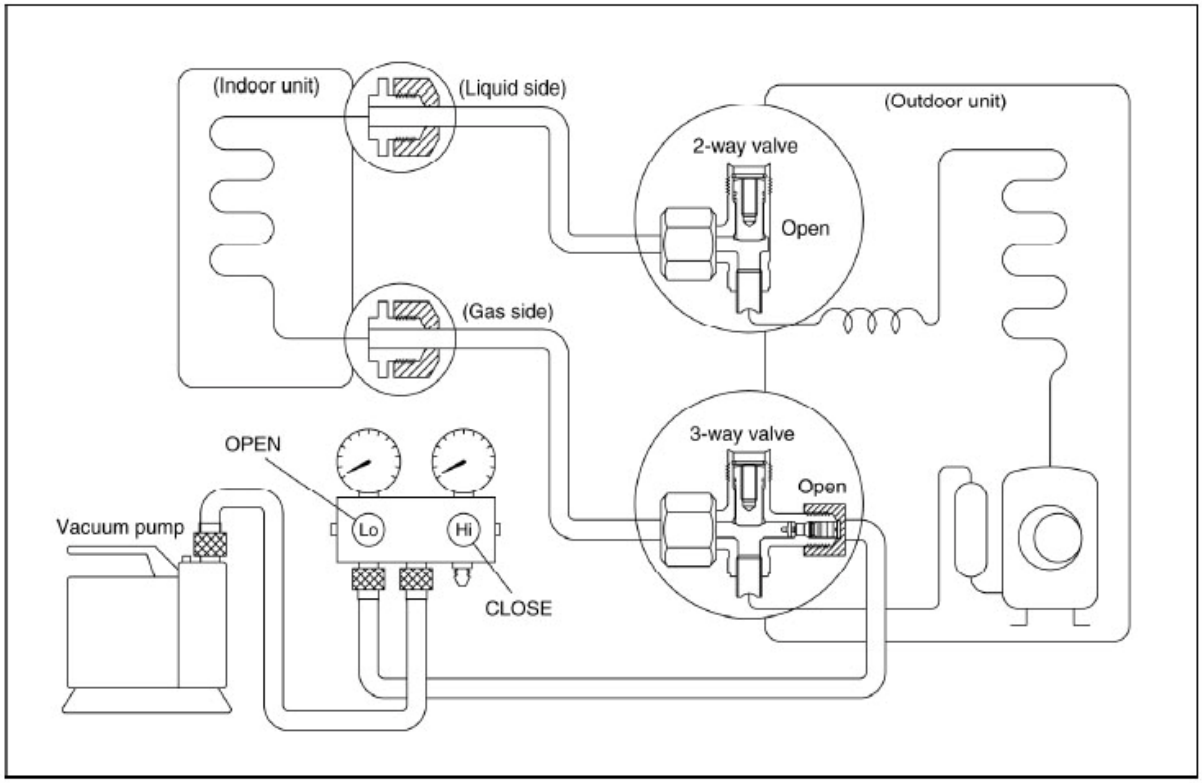

Procedure:

1. Connect the vacuum pump to the charge set's centre hose.
2. Evacuation for approximately one hour.

Confirm that the gauge needle has moved toward -0.1 Mpa (-76 cmHg) [vacuum of 4 mmHg or less].

3. Close the valve (Low side) on the charge set, turn off the vacuum pump, and confirm that the gauge needle

does not move (approximately 5 minutes after turning off the vacuum pump).

4. Disconnect the charge hose from the vacuum pump.

Vacuum pump oil, if the vacuum pump oil becomes dirty or depleted, replenish as needle.

Downloaded from www.Manualslib.com manuals search engine

7.9 Gas charging

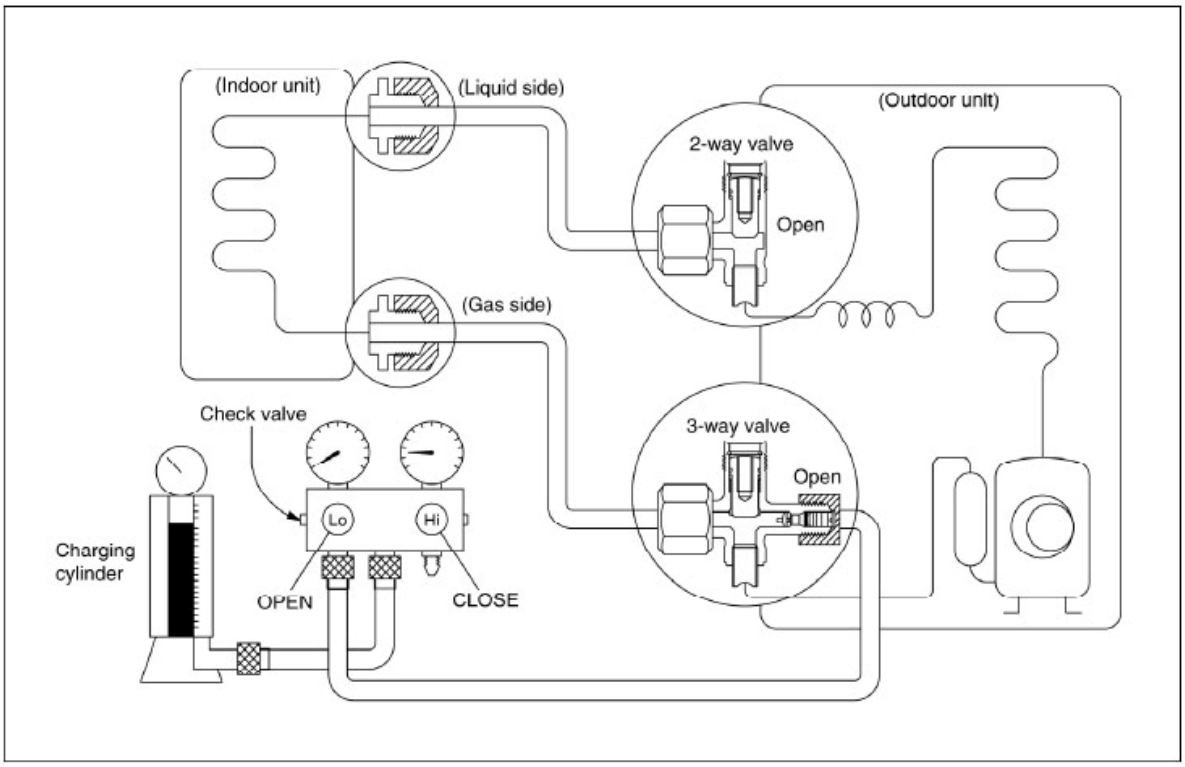

Procedure:

1. Connect the charge hose to the charging cylinder.

Connect the charge hose which you disconnected from the vacuum pump to the valve at the bottom of the cylinder.

2. Purge the air from the charge hose.

Open the valve at the bottom of the cylinder and press the check valve on the charge set to purge the air (be careful of the liquid refrigerant).

3. Open the valves (Low side) on the charge set and charge the system with liquid refrigerant.

If the system cannot be charge with the specified amount of refrigerant, if can be charged with a little at a time (approximately 150g each time0 while operating the air conditioner in the cooling cycle; however, one time is not sufficient, wait approximately 1 minute and then repeat the procedure.(pumping down-pin).

4. Immediately disconnect the charge hose from the 3-way valve's service port.

Stopping partway will allow the refrigerant to be discharged.

If the system has been charged with liquid refrigerant while operating the air conditioner, turn off the air conditioner before disconnecting the hose.

5. Mounted the valve stem caps and the service port

Use torque wrench to tighten the service port cap to a torque of 18N.m.

Be sure to check for gas leakage.

Downloaded from www.Manualslib.com manuals search engine

8. Electronic function

8.1 Abbreviation

T1: Indoor ambient temperature
T2: Pipe temperature of indoor heat exchanger
T3: Pipe temperature of outdoor heat exchanger
T4: Outdoor ambient temperature

8.2 Display function

8.2.1 Icon explanation on indoor display board.

	Lights up when the super ionizer function is energized.
	This indicator illuminates when TIMER is set ON/OFF.
	This indicator illuminates when the air conditioner starts defrosting automatically or when the warm air control feature is activated in heating mode.
auto	This indicator illuminates when the air conditioner is in AUTO operation.
88	Usually it displays the setting temperature. It will display the room temperature when the air conditioner is in FAN only operation. It will display "SC" when self-clean function is activated. It will also display the malfunction code or protection code.
	This indicator appears only when the compressor is in operation and indicates the current operating frequency.

Downloaded from www.Manualslib.com manuals search engine

8.3 Protection

8.3.1 Three Minutes Delay at restart for compressor.

8.3.2 Temperature protection of compressor top.

If the temperature of compressor top is too high (higher than 115℃ and the Over-load Protector is cut, the units stop. When the Over-load Protector restore and close (lower than 100℃), the compressor will restart (In this case the compressor is restricted by Three Minutes Delay protection.)

8.3.3 Temperature protection of compressor exhaust.

If the exhaust temp. of compressor is higher than 115℃ and lasts for 5 seconds, the compressor stops and does not resume until the exhaust temp. is lower than 90℃.

8.3.4 Inverter module Protection, Inverter module Protection itself has a protection function against current, voltage and temperature. If these protections happened, the corresponding code will display on indoor unit LED.

8.3.5 Sensor protection at open circuit and breaking disconnection

8.3.6 Fan Speed is out of control. When Indoor Fan Speed is too low (lower than 300RPM for 50 seconds), the unit stops and LED displays failure information and can't return to normal operation automatically.

8.3.7 Zero-crossing signal error warning.

If there is no zero-crossing signal in 4 minutes or the interval is wrong, the unit will enter error warning.

8.3.8 For all modes, when the units are turned on, the indoor fan can operate 10 seconds after the action of louver.

8.3.9 Compressor preheating function.

Preheating permitting condition:

If T4(outdoor ambient temperature)＜3℃ and the machine connects to power supply newly or if T4 ＜3℃ and compressor has stopped for over 3 hours, the compressor heating cable will work.

Preheating mode:

A weak current flow through the coil of compressor from the wiring terminal of compressor, then the compressor is heated without operation.

Preheating release condition:

If T4＞5℃ or user turns on the machine and compressor runs, preheating function will stop.

8.4 Fan-Only Mode

8.4.1 Temperature setting function is disabled, and no setting temperature display.

8.4.2 In this mode, the action of louver is the same as in cooling mode.

8.4.3 The action of auto fan in fan-only mode is the same as auto fan in cooling mode with 24℃ setting temperature.

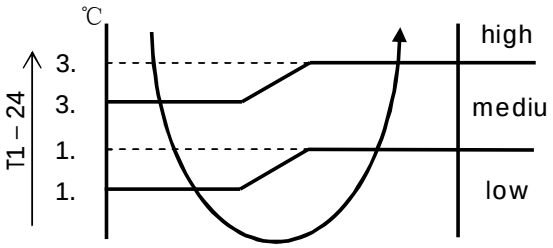

Downloaded from www.Manualslib.com manuals search engine

8.5 Cooling Mode

8.5.1 The operation frequency of compressor after starting submits to following rule.

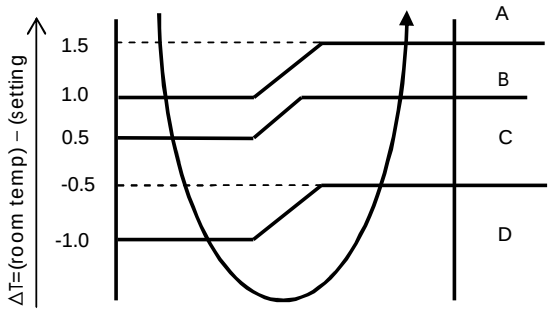

When the machine is running and ΔT(=room temp. – setting temp.) changes, the frequency of compressor will rise or descend a grade (7 minutes after starting).

After starting, if ΔT stays in a zone for 3 minutes, the frequency will change as follow:

Zone A : Current frequency rise a grade till the maximum grade F8.

Zone B: Keep the current frequency of compressor.

Zone C: Descend the current frequency of compressor until F1.

Zone D: Compressor stops after running as the minimum frequency F1 for 60 minutes or ΔT is less than -2℃.

8.5.2 Indoor heat exchanger anti-freezing function.

If T2 is lower than 0℃, the compressor stops and resumes when T2>5℃.

8.5.3 Outdoor unit current control in cooling mode.

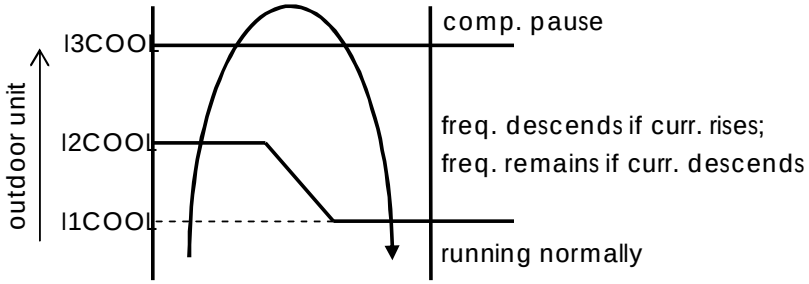

8.5.4 Rating capacity test function

1) Set the indoor unit with remote controller as: high fan, 17℃ in cooling mode, then press "TURBO" button on controller 6 times or more within 10 seconds (make sure indoor unit receives these signals), the machine will turn into rating capacity test mode, the buzzer will make a "di" sound for 2 seconds continuously. Also, indoor fan will change to rating speed, the frequency of compressor will be fixed as rating value. Any condition of above is not satisfied, the machine cannot be turned into rating capacity test mode.

2) The machine will quit from the rating capacity test mode if running for 5 hours or changing fan speed or setting temperature.

8.5.5 Turbo function(press the "TURBO" button on remote controller)

Elevate current frequency to a higher grade.

Downloaded from www.Manualslib.com manuals search engine

Indoor fan turns to turbo speed.
After running for 30 minutes the machine will turn back to previous setting mode.

8.5.6 Indoor fan operation rule.
In cooling mode, indoor fan runs all the time and the speed can be selected as high, medium, low and auto.
Auto fan in cooling mode acts as follow:

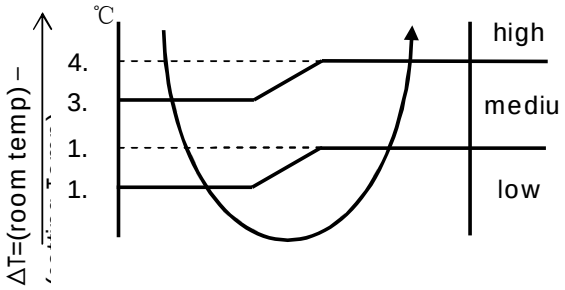

8.5.7 Condenser high temperature protection function(in cooling and drying mode)
If T3＞60℃ for 5 seconds, compressor will stop immediately, and the machine will not resume until T3 ＜52℃.

8.6 Drying mode

8.6.1 Indoor fan speed is fixed at breeze grade and can't be changed. The horizontal angle is the same as in cooling mode.
8.6.2 Room overlow temperature protection
In drying mode, if room temperature is lower than 10℃, compressor will stop and not resume until room temperature climbs up to 12℃.
8.6.3 Evaporator anti-freezing protection, condenser high temperature protection and outdoor unit frequency limit are valid, and they are the same as that in cooling mode.
8.6.4 Horizontal louver action is the same as that in cooling mode.

8.7 Heating mode

8.7.1 Indoor fan action:
Anti-cold-wind function.

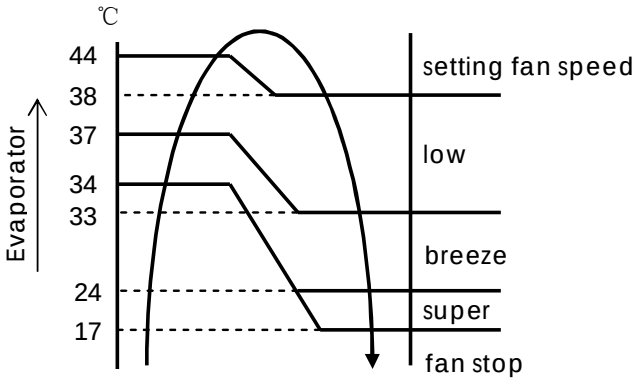

If the compressor stops caused by room temperature rising, indoor fan will be forced to run 127

Downloaded from www.Manualslib.com manuals search engine

seconds with breeze. During this period, anti-cold-wind is disabled. After this, anti-cold –wind function is available.
If the machine runs in rating capacity test mode, indoor fan runs with rating speed, and anti-cold-wind is disabled.

8.7.2 Indoor fan speed can be set as high, medium, low or auto grade, but anti-cold-wind function is preferential.

Auto fan action in heating mode.

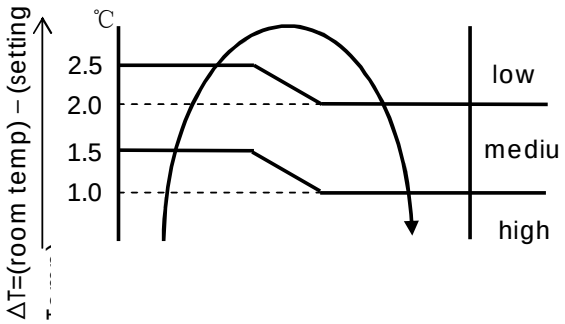

8.7.3 The operation frequency of compressor after starting submits to following rule:

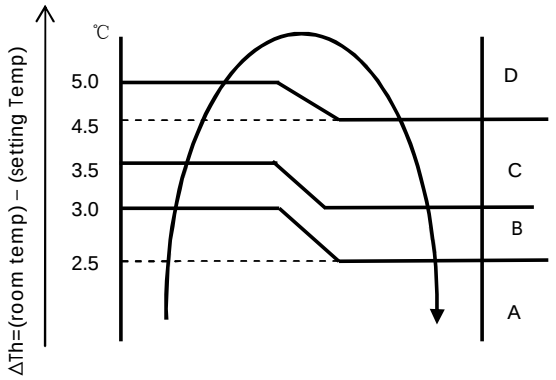

When the machine runs, if ΔTh stays in a zone for 3 minutes, action of frequency is as follow:

Zone A: Elevate the current frequency one grade, and not stop until the maximum grade.

Zone B: Keep the current frequency.

Zone C: Descend the current frequency one grade.

Zone D: Compressor stops after running with F1 for 60 minutes or when ΔTh＞6℃.

8.7.4 Outdoor unit current control in heating mode.

Downloaded from www.Manualslib.com manuals search engine

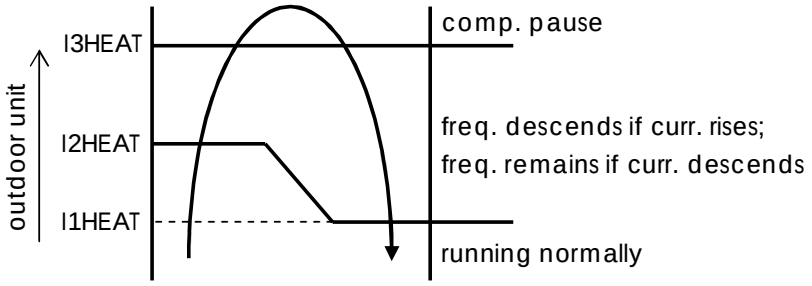

8.7.5 Indoor heat exchanger high temperature protection.

If T2＞60℃, the compressor will stop and not resume until T2＜48℃.

8.7.6 Defrosting mode.

Condition of defrosting.

Condition 1: If T4＞0℃,

When the units are running, if the following two items are satisfied the units start defrosting:

The units runs with T3＜3℃ for 40 minutes and T3 keeps lower than -6℃ for more than 3 minutes.

The units runs with T3＜3℃ for 80 minutes and T3 keeps lower than -4℃ for more than 3 minutes.

Condition 2: If T4＜0℃,

The program judges according to the condition 1, if the two items are satisfied, then judges if T2 has descended for more than 5℃, if it has the machine starts defrosting, or continues to judge T2 and will not defrost until T2 drops more than 5℃.

Condition 3: No matter what value T4 is, if the machine runs with T3＜3℃ for more than 120 minutes and T3 keeps lower than -2℃ for more than 3 minutes, the machine will defrost, no matter if T2 drops for more than 5℃ or not.

Condition of ending defrosting.

If any one of following items is satisfied, defrosting will finish and the machine will turn to normal heating mode.

T3 rises to be higher than 12℃.

T3 rises to be higher than 8℃ and remains for 80 seconds.

The machine has run for 10 minutes in defrosting.

8.7.7 Defrosting action

For MSY-09HRDN1-QC2 and MSY-12HRDN1-QC2

Downloaded from www.Manualslib.com manuals search engine

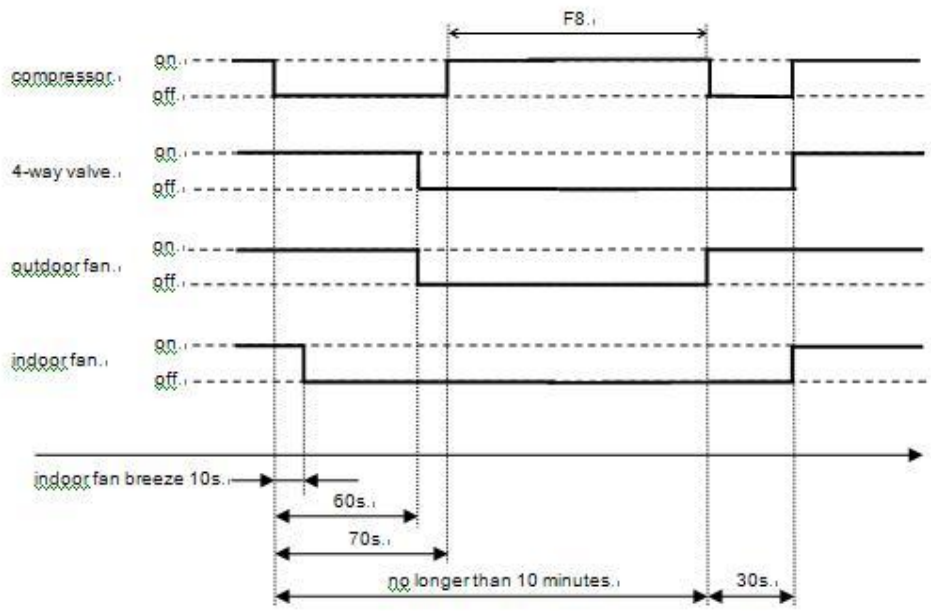

For MSY-09HRDN1-QC8 and MSY-12HRDN1-QC4 and MSY-18HRDN1-QC2

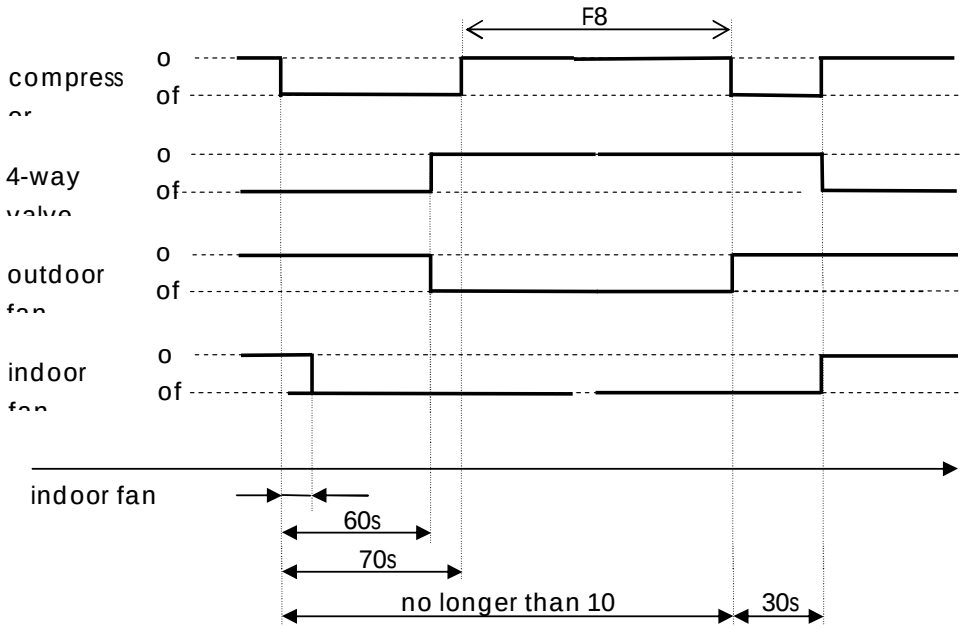

8.7.8 Rating capacity test function.

Set the indoor unit with remote controller as: high fan, 30℃ in heating mode, then press "TURBO" button on controller 6 times or more within 10 seconds (make sure indoor unit receives these signals), the machine will turn into rating capacity test mode, the buzzer will make a "di" sound for 2 seconds continuously. Also, indoor fan will change to rating speed, the frequency of compressor will be fixed as rating value. Any condition of above is not satisfied, the machine cannot be turned into rating capacity test mode.

Downloaded from www.Manualslib.com manuals search engine

The machine will quit from the rating capacity test mode if running for 5 hours or changing fan speed or setting temperature.

8.7.9 Turbo function in heating mode. (press the "TURBO" button on remote controller)
Elevate current frequency (excluding F8) to a higher grade. If indoor fan is in low speed or pause caused by defrosting or anti-cold-wind function, frequency of compressor will not be elevated one grade until these limit has been released.
Indoor fan changes to turbo speed and anti-cold-wind function is valid.

8.8 Auto mode function

8.8.1 This mode can be chosen with remote controller and the setting temperature can be changed between 17~30℃.
In auto mode, the machine will choose cooling, heating or fan-only mode according to ΔT (ΔT =T1-Ts).

ΔT=T1-Ts	Running mode
ΔT＞1℃	Cooling
-1≤ΔT≤1℃	Fan-only
ΔT＜-1℃	Heating

8.8.2 Indoor fan will choose auto speed of relevant mode.
8.8.3 If the machine switches mode between heating and cooling, compressor will keep stopping for 15 minutes and then rechoose mode according to ΔT.
8.8.4 If the setting temperature is modified, the machine will rechoose running function.

8.9 Forced operation function

8.9.1 Forced cooling and auto function can be carried out through a touch button. In these two modes, the machine can be changed by remote controller to any other mode at any moment.
8.9.2 When the machine is off, pressing the touch button will carry the machine to forced auto mode, after this, if pressing the button once again within 5 seconds, the machine will turn into forced cooling mode. In forced auto, forced cooling or any other operation mode, pressing touch button will turn off the machine. In forced operation, remote control is available.
8.9.3 In forced operation mode, all general protections are available.
8.9.4 In forced cooling mode, after running for 30 minutes with compressor frequency F2 and breeze indoor fan speed, the machine will turn to normal auto mode in which setting temperature is 24℃.
8.9.5 The action of forced auto mode is the same as normal auto mode which temperature is 24℃.

8.10 Action of 4-way valve

For MSY-09HRDN1-QC2 and MSY-12HRDN1-QC2
In cooling, drying, fan-only, or turning off mode, 4-way valve is off, while in heating mode 4-way valve is on. If the machine changes operation mode from heating mode to some other mode, 4-way valve will be delayed off 2 minutes after compressor stop. For defrosting, please refer to the passage "defrosting mode".
For MSY-09HRDN1-QC2 and MSY-12HRDN1-QC2 and MSY-18HRDN1-QC2
In heating, fan-only, standby or turning off mode, 4-way valve is off, while in cooling\drying and

Downloaded from www.Manualslib.com manuals search engine

forced cooling mode 4-way valve is on. If the machine changes operation mode from heating to cooling\drying\forced cooling mode, 4-way valve will be delayed off 2 minutes after compressor stop. If the machine changes operation mode from non-heating mode to heating mode, the 4-way valve will be turned off immediately.

8.11 Two speeds outdoor fan function

8.11.1 Outdoor fan action in heating mode(including heating in auto mode).

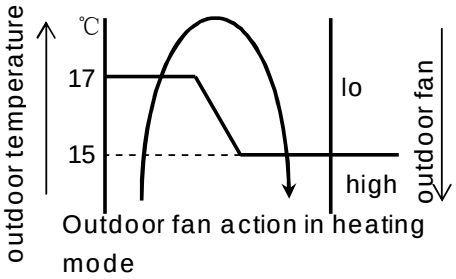

Outdoor fan action in heating mode

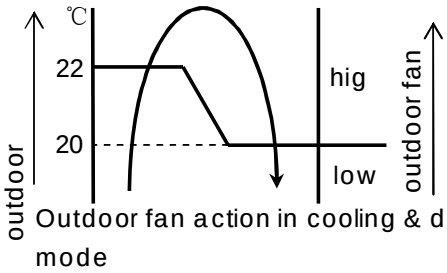

Outdoor fan action in cooling & drying mode

8.11.2 Outdoor fan action in cooling & drying mode(including cooling in auto & forced mode). Please refer to the pic. above.

8.12 Timer function

8.12.1 Timing range is 24 hours, and the setting time is the relative time.

8.12.2 Timer on.

After turning off, the machine will turn on automatically when reaching the setting time.

8.12.3 Timer off.

After turning on, the machine will turn off automatically when reaching the setting time.

8.12.4 Timer on/off.

After turning off, the machine will turn on automatically when reaching the setting "on" time, and then turn off automatically when reaching the setting "off" time.

8.12.5 Timer off/on.

After turning on, the machine will turn off automatically when reaching the setting "off" time, and then turn on automatically when reaching the setting "on" time.

8.12.6 Timer function will be eliminated when the unit is turned off by remote controller.

8.13 Sleep function mode

8.13.1 Operation time in sleep mode is 7 hours. The unit will quit from this mode and be turned off in 7 hours.

8.13.2 In cooling, heating or auto mode sleep function is available.

8.13.3 Operation process in sleep mode is as follow:

After pressing SLEEP button on remoter controller, the machine will get into sleep mode.

When cooling, the setting temperature rises 1℃(be lower than 30℃) every one hour, 2 hour later the rising stops and indoor fan is fixed as low speed.

When heating, the setting temperature descends 1℃(be lower than 30℃) every one hour, 2 hour later the descending stops and indoor fan is fixed as low speed, and anti-cold-wind is available.

8.13.4 If user uses timer on function in sleep mode, sleep function will pause and not resume until reaches the setting on time.

Downloaded from www.Manualslib.com manuals search engine

8.13.5 When user uses timer off function in sleep mode(or sleep function in timer off mode), if the timing time is less than 7 hours, sleep function will be cancelled when reaching the setting time. If the timing time is more than 7 hours, the machine will not stop until reaches the setting off time in sleep mode.

8.14 Auto-Restart function

In case of a sudden power failure, the indoor main chip will restore the setting conditions before the power failure. The unit will resume the previous operation setting (including setting mode, temperature, fan speed, vertical swing) automatically after 3 minutes when power returns.

8.15 Super Ionizer function

Super ionizer function which is controlled through remote controller is available only when the unit is on.
After the Aircon being turned on, the Ionizer function is switched on when the unit receives CODE from remote controller at first time, and ionizer is switched off when the unit receives the CODE again. It's a circle.
After starting the Ionizer function, the ionizer can work only when the indoor fan motor is running. If the indoor fan motor is off, the ionizer also stops working, even though the Ionizer function is available.Ionizer function will not be off when the running mode is switched. Ionizer function will be off when the unit is turned off.

8.16 Self-clean function

1) Self-Clean function is available only at cooling (including auto-cooling and turbo) and drying mode, when the user presses down the button "Self-Clean" on remote controller, "SC" icon will be displayed on the indoor temperature display area. After running for 13 minutes in low fan mode, the unit will get into low heating mode (anti-cold wind function is not valid). When the unit keeps low heating mode for 1 min or evaporator high temp protection occurs, it will stop heating and get into low fan mode and keep running for another 2 minutes. Then the unit will quit from Self-Clean function and turn off.
2) When setting the Self-Clean function, the unit has been in Timer or Turbo function, the Timer or Turbo function will be cancelled and then execute Self-Clean function.
3) When the unit is running Self-Clean function, all other functions will be not available except swing/air direction/clean air/vent/LED display, and only receiving "Self-Clean" code again or "turn off" code, the unit will quit from the function.
4) When the unit is running Self-Clean function, all protection functions are valid.

8.17 Follow me function

If the indoor PCB receives the signal which results from pressing the FOLLOW ME button on remote controller, the buzzer will emit a sound and this indicates the follow me function is initiated. But when the indoor PCB receives signal which sent from remote controller every 3 minutes, the buzzer will not respond. When the unit is running with follow me function, the PCB will control the unit according to the temperature from follow me signal, and the temperature collection function of room temperature sensor will be shielded, but the error detective function of room temperature sensor will be still valid.

Downloaded from www.Manualslib.com manuals search engine

When the follow me function is available, the PCB will control the unit according to the room temperature (T1) from the remote controller and the setting temperature (TS), and the action of compressor is as following:

At cooling mode, if T1＜TS, compressor is off; If T1≥TS, compressor is on.

At heating mode, if T1＞TS, compressor is off; If T1≤TS, compressor is on.

The PCB will take action to the mode change information from remote controller signal, but it will not affected by the setting temperature.

When the unit is running with follow me function, if the PCB doesn't receive any signal from remote controller for 7 minutes or pressing FOLLOW ME button again, the follow me function will be turned off automatically, and the temperature collection function of room temperature sensor will be available, the PCB will control the unit according to the room temperature detected from its own room temperature sensor and setting temperature.

8.18 Outdoor heating cable (Optional)

A heating cable can be fixed on outdoor chassis to help deicing and to avoid freezing. Another heating cable can be fixed around compressor to help starting the compressor. These heating cables are useful to improve the performance of the air conditioner especially when the outdoor ambient temperature is very low. The rated power voltage for the heating cables is 220V-240V. The action of the heating cables is controlled by the PCB. If outdoor temperature is lower than 5℃, the heating cable will begin to work. If outdoor temperature is higher than 15℃, the heating cable will stop working.

Downloaded from www.Manualslib.com manuals search engine

9. Troubleshooting

Safety

Because there are capacitors in PCB and relative circuit in outdoor unit, even shut down the power supply,

electricity power are still kept in capacitors, do not forget to discharge the electricity power in capacitor.

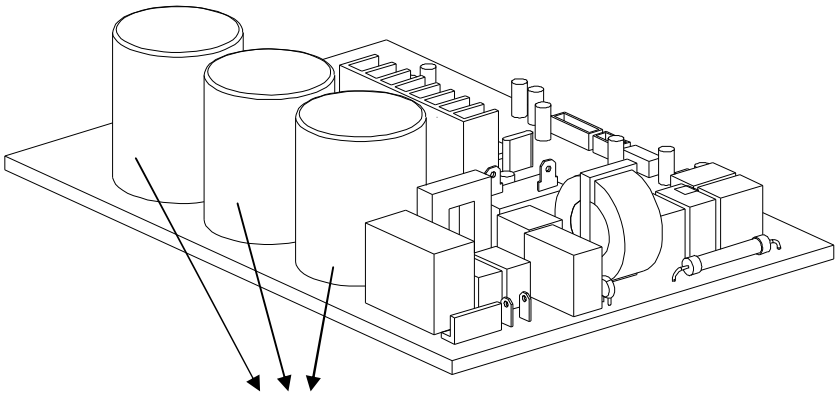

Electrolytic Capacitors
(HIGH VOLTAGE! CAUTION!)

Bulb (25-40W)

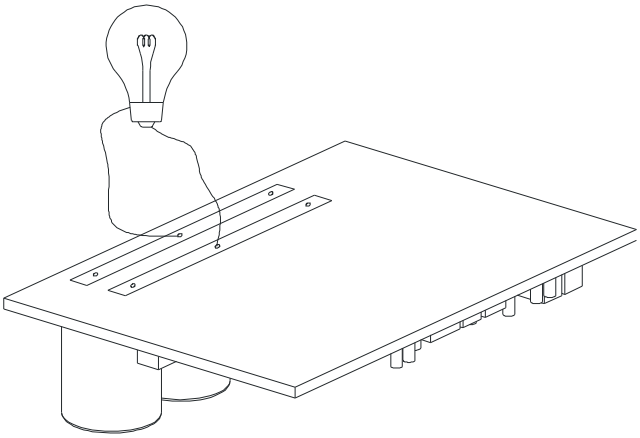

Downloaded from www.Manualslib.com manuals search engine

9.1 Indoor Unit Error Display

Display	LED STATUS
E0	EEPROM parameter error
E1	Indoor / outdoor units communication protection
E2	Zero-crossing signal error
E3	Indoor fan speed out of control
E5	Open or short circuit of outdoor temperature sensors
E6	Open or short circuit of indoor temperature sensors
E7	Outdoor fan speed out of control
E8	Reset error of Auto Clean filters
P0	IGBT over-strong current protection
P1	Over voltage or too low voltage protection
P2	Temperature protection of compressor top.
P4	Inverter compressor drive error

Note: E4 & P3: Reserved function

Downloaded from www.Manualslib.com manuals search engine

9.2 Diagnosis and Solution

9.2.1 E0 (EEPROM parameter error) error diagnosis and solution

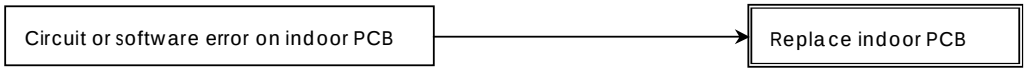

9.2.2 E1 (indoor / outdoor units communication protection) error diagnosis and solution

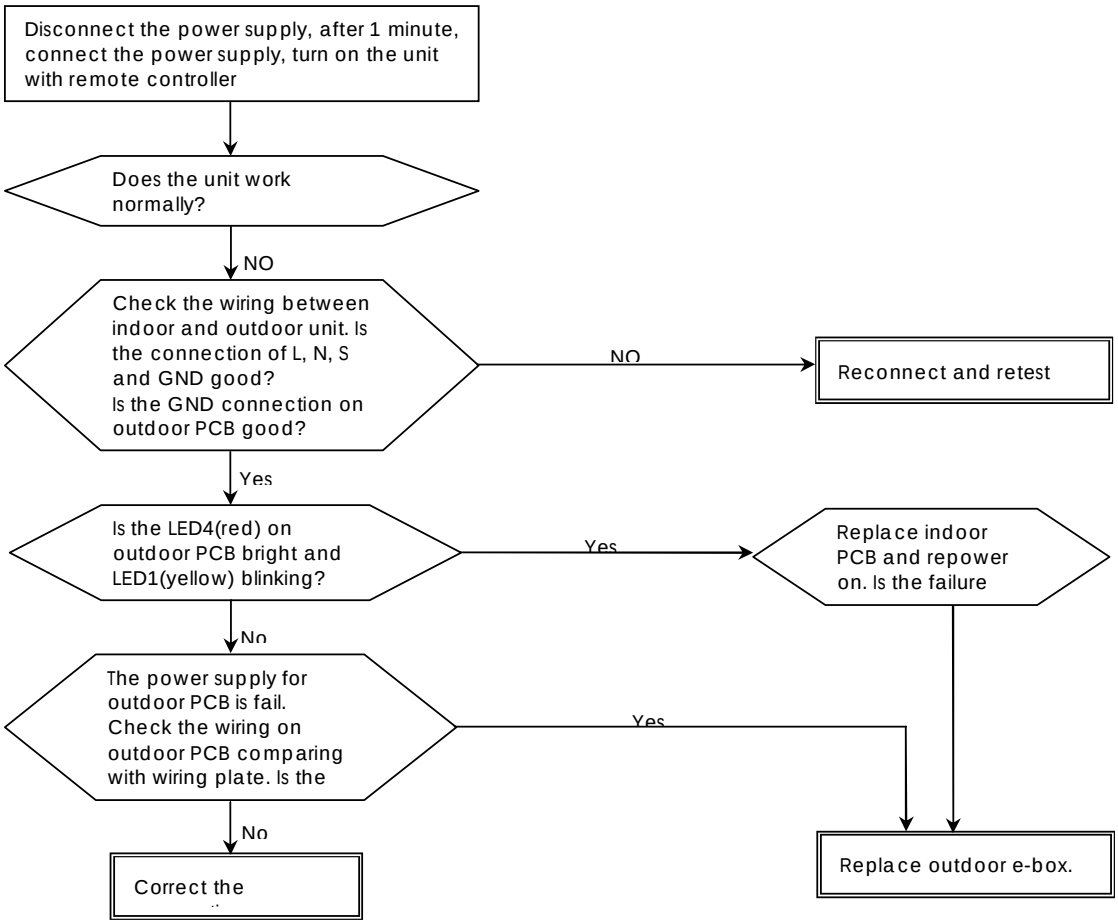

9.2.3 E2(zero-crossing signal error) diagnosis and solution

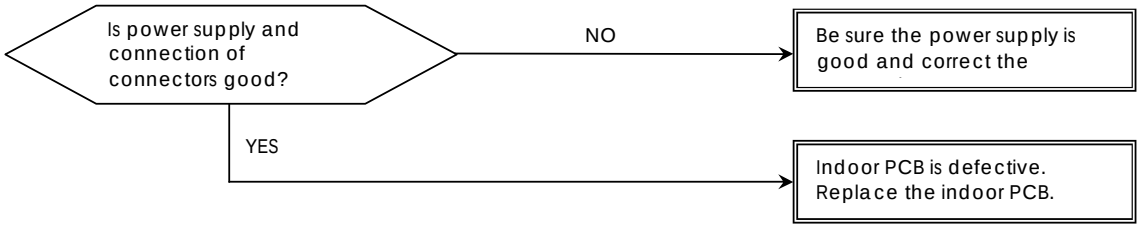

Downloaded from www.Manualslib.com manuals search engine

9.2.4 E3(indoor fan speed out of control) diagnosis and solution

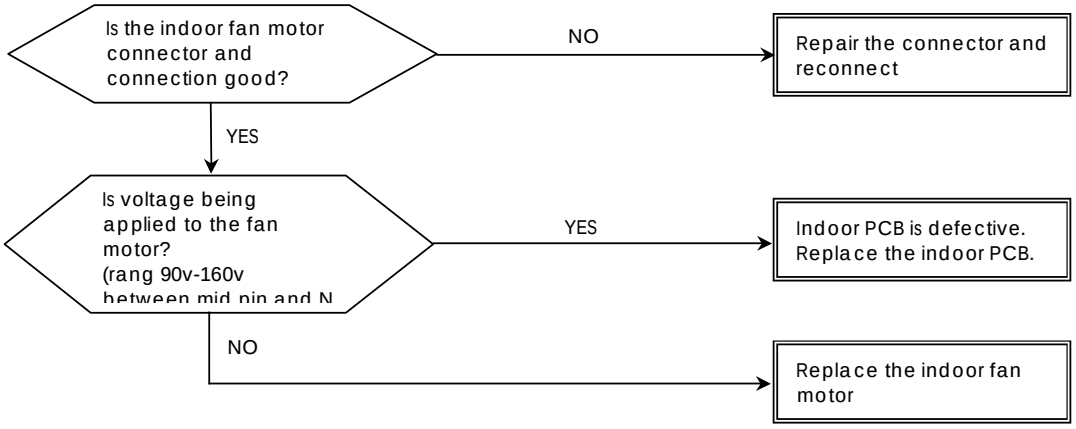

9.2.5 E5(Open or short circuit of outdoor ambient or condenser temperature sensor) diagnosis and solution.

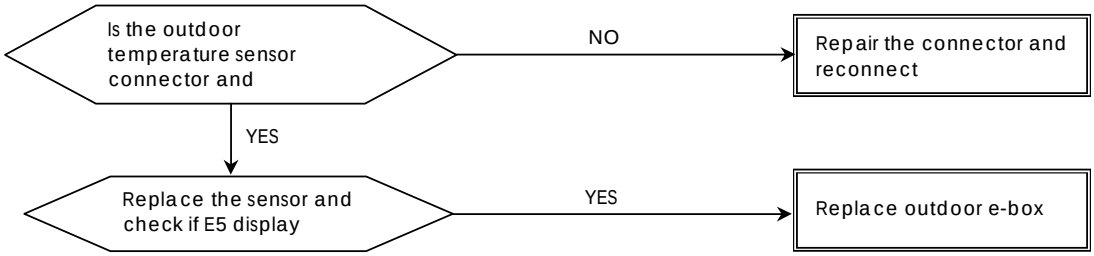

9.2.6 E6(open or short circuit of indoor room or evaporator temperature sensor) diagnosis and solution.

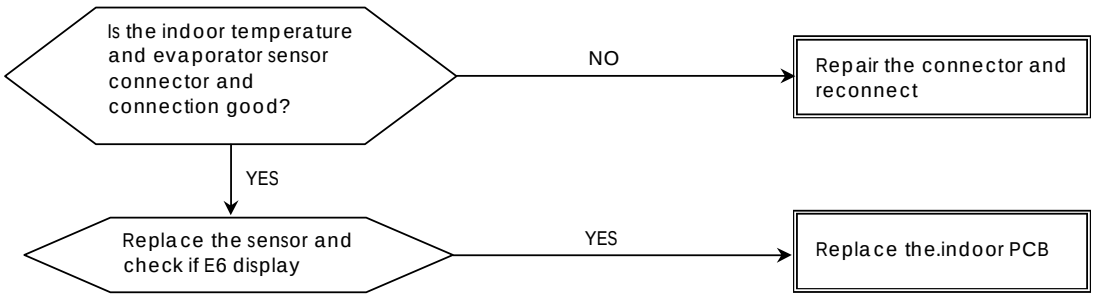

9.2.7 P0(IGBT over-strong current protection) diagnosis and solution.

Downloaded from www.Manualslib.com manuals search engine

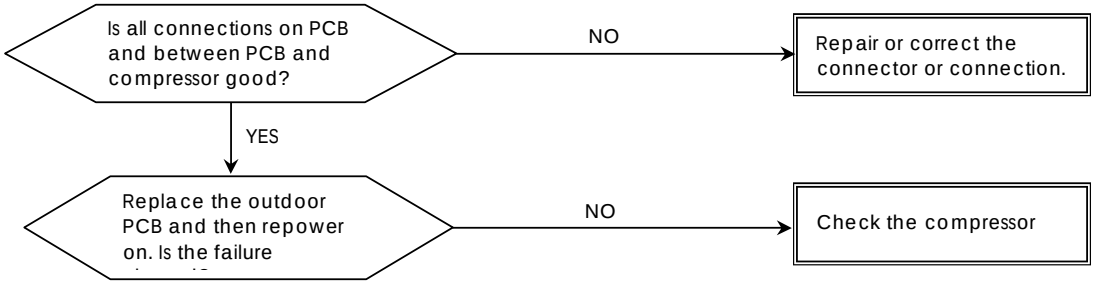

9.2.8 P1(over voltage or too low voltage protection) diagnosis and solution.

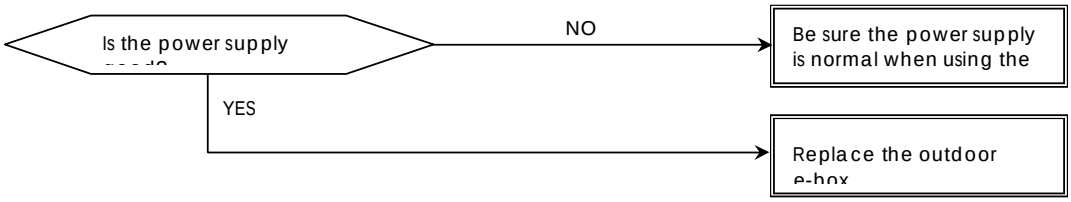

9.2.9 P2(temperature protection of compressor top) diagnosis and solution.

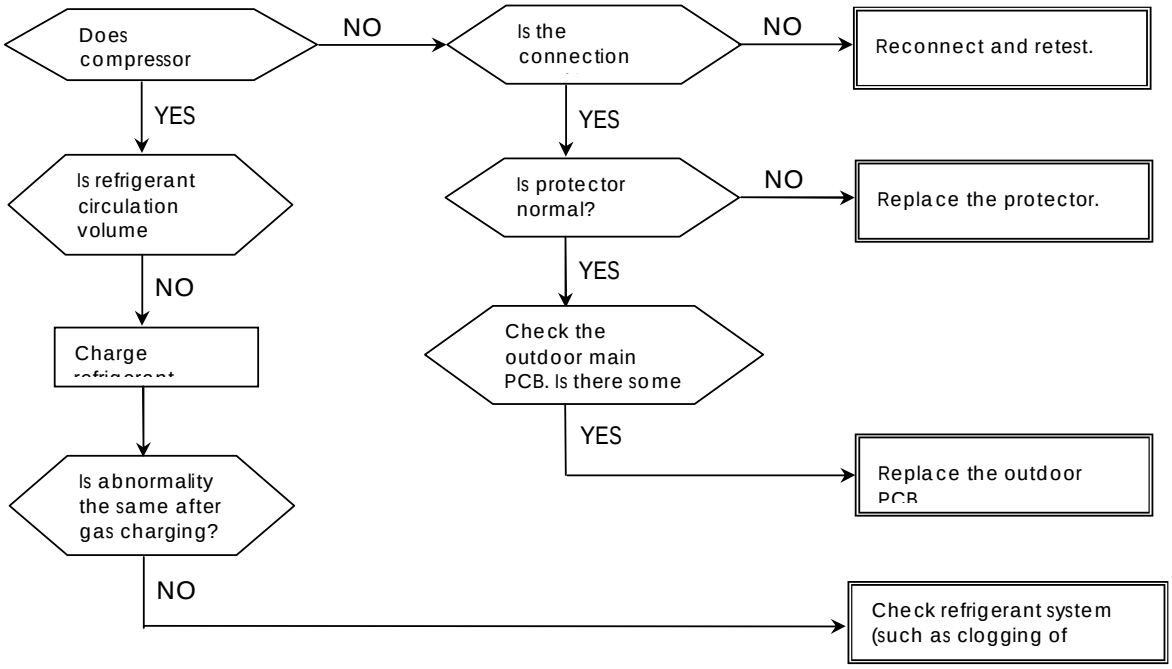

9.2.10 P4(inverter compressor drive error) diagnosis and solution.

Downloaded from www.Manualslib.com manuals search engine

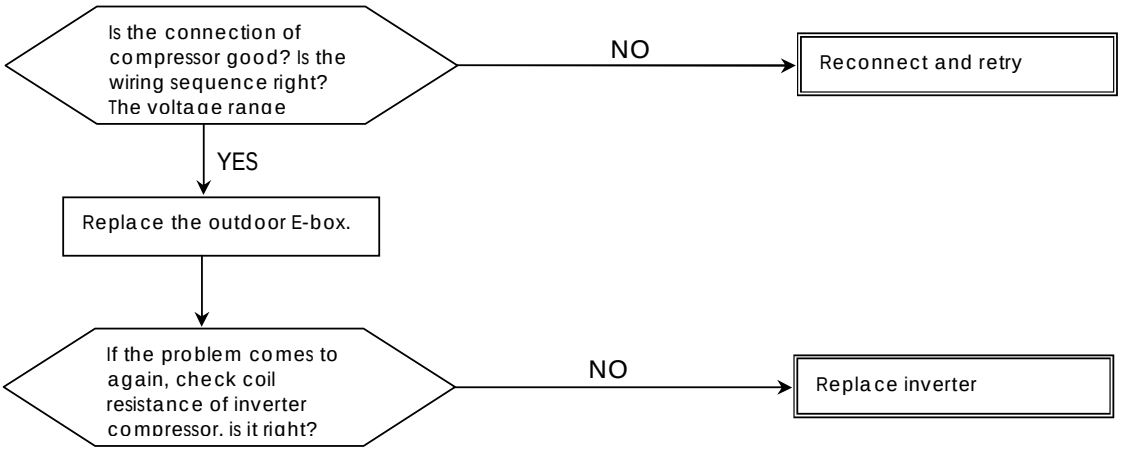

Downloaded from www.Manualslib.com manuals search engine

9.3 Checking for temperature sensors

Room temp.(T1) sensor,
Indoor coil temp.(T2) sensor,
Outdoor coil temp.(T3) sensor,
Outdoor ambient temp.(T4) sensor,
Compressor exhaust temp.(Te) sensor.

Measure the resistance value of each winding by using the multi-meter.

Some frequently-used R-T data for T1,T2,T3 and T4 sensor:

Temperature (℃)	5	10	15	20	25	30	40	50	60
Resistance Value (KΩ)	26.9	20.7	16.1	12.6	10	8	5.2	3.5	2.4

Some frequently-used R-T data for Te sensor:

Temperature (℃)	5	15	25	35	60	70	80	90	100
Resistance Value (KΩ)	141.6	88	56.1	36.6	13.8	9.7	6.9	5	3.7

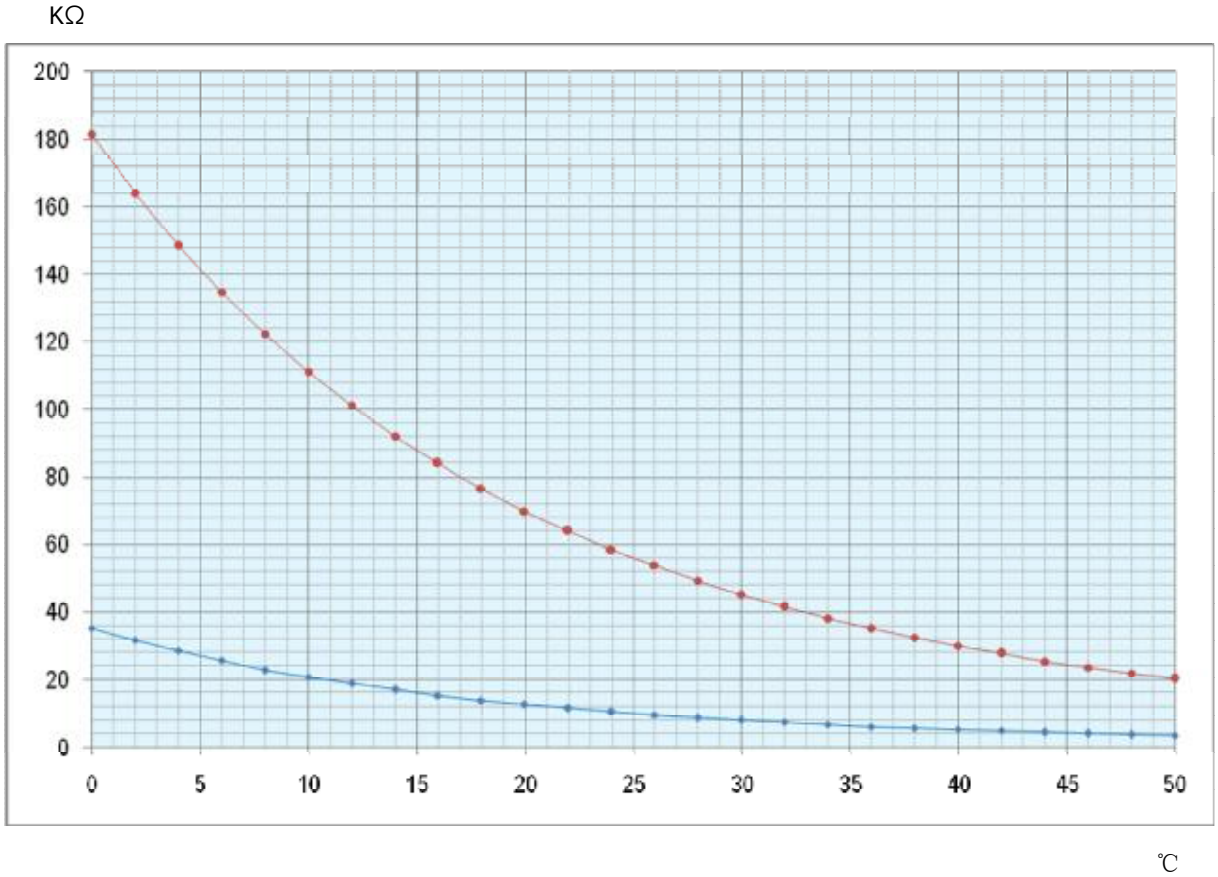

Downloaded from www.Manualslib.com manuals search engine

Downloaded from www.Manualslib.com manuals search engine

Other ManualsLib Projects

www.manualslib.com

www.manualslib.de

www.manualslib.es

www.manualslib.fr

www.manualslib.nl

www.manualslib.mx

www.manualslib.tech 30+ Languages