CPQ236 Module Hardware Manual

Version：V2.0

SHENZHEN COMPARE ELECTRONICS CO., LTD.

6F B Building, Jinhong Industrial Park, Jiuwei Community Hangcheng Street, Bao'an District, Shenzhen 518126, China.

Tel：0755-29063503 Fax：0755-29063506

Website:www.szcompare.com Postcode:518126

Important Note

Copyright description

2015. All rights reserved. Shenzhen, Compare Electronics Co., Ltd., all rights reserved

Trademark description

Shenzhen Compare Electronics Co., Ltd. logo and Shenzhen Compare Electronics Co., Ltd. products are Shenzhen Compare Electronic Co., Ltd. proprietary. In reference to other companies and their products will be used by the company's own trademark, the purpose of this use is limited to the reference.

Not Guarantee instructions

Any representation or warranty, express or implied by the Shenzhen Compare Electronic s Co., Ltd is not in this document any content and not specific to the implied warranties of merchantability and applicability or any indirect, special or consequential loss bear any responsibility.

Privacy statement

The information contained in this document (including any attachments) is confidential information. Recipient understand their access to this document is confidential, except for specified purposes shall not be used for any purpose, nor the disclosure of this document to any third party.

Contact information

Shenzhen Compare Electronics Co., Ltd. for customers to provide a full range of technical support, any advice please contact your sales manager or send e-mail

Part to technical mailbox: **FAE@SZCOMPARE.COM**

File update record

revison	Release time	Revison note
V1.0	2017.04.26	First Draft
V2.0	2018.11.01	Circuit Optimization

Contents

Contents **3**

1 Product introduction **4**

1.1 Description 4

2 RF parameter **4**

3 Hardware Description **7**

3.1 Pin definition 8

3.2 power supply 11

3.3 USB 11

3.4 UART interface 12

3.5 Network port 12

3.6 Reset 13

3.7 GPIO 13

4 Structure encapsulation **14**

1 Product introduction

1.1 Description

CPQ236 is the 2.4G wireless communication module based on Atheros QCA9531 scheme in Shenzhen Compare Electronic ltd.. CPQ236 series module designed rich peripheral interface and powerful software support platform, which can carry out two software development. Can support a variety of peripheral equipment, to meet the different needs. DDR2 64MByte. FLASH 16MByte.

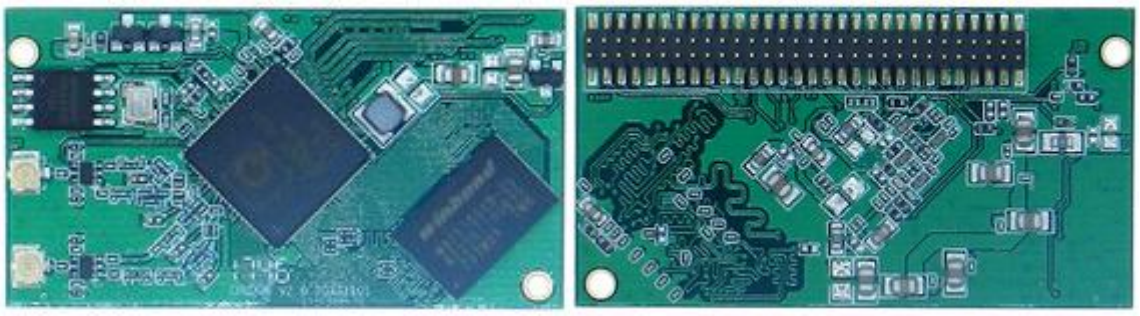

Figure 1-1 CPQ236 module

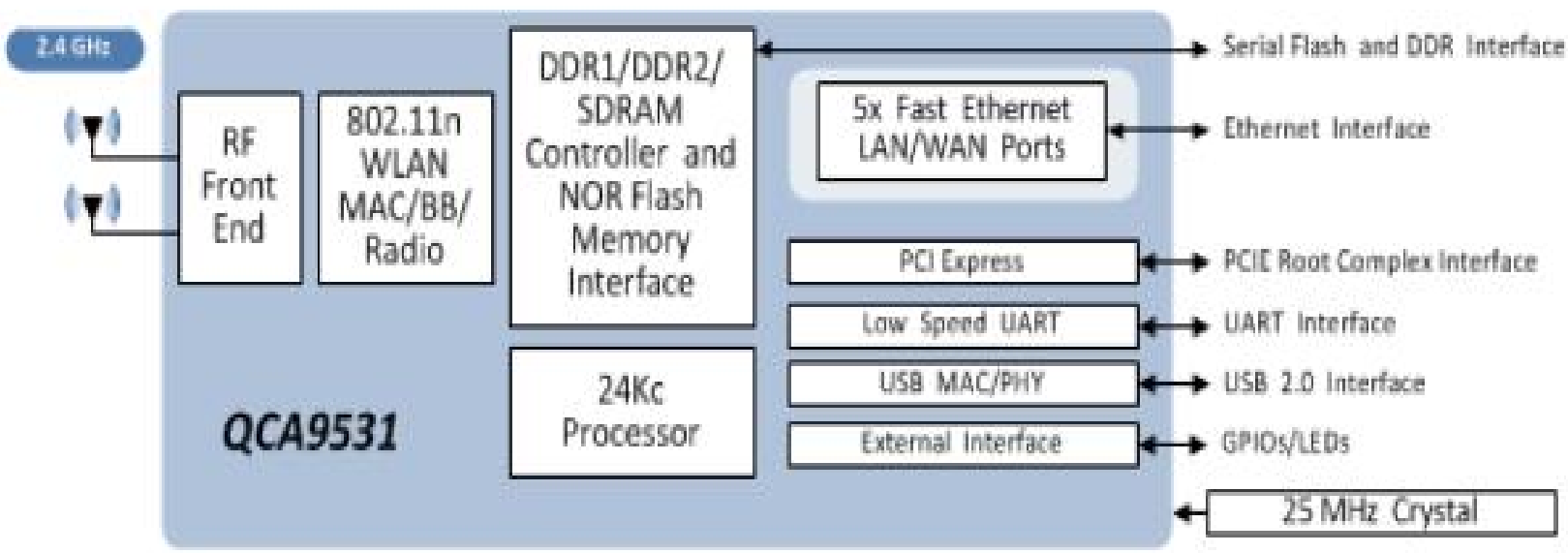

2 RF parameter

project	describe

working frequency	2.4000GHz～2.4835GHz；		
RF power	IEEE802.11g:14dBm±2dBm		
RF model	2T2R		
Frequency tolerance	±20ppm		
EVM	11b	≤0.35	
	11g	6Mbps	≤-5dB
		9Mbps	≤-8dB
		12Mbps	≤-10dB
		18Mbps	≤-13dB
		24Mbps	≤-16dB
		36Mbps	≤-19dB
		48Mbps	≤-22dB
		54Mbps	≤-25dB
	11n	MCS0/8	≤-5dB
		MCS1/9	≤-10dB
		MCS2/10	≤-13dB
		MCS3/11	≤-16dB
		MCS4/12	≤-19dB

		MCS5/13	≤-22dB
		MCS6/14	≤-25dB
		MCS7/15	≤-28dB
Receiving sensitivity	PER＜ 8%@802.11b PSDU=1024Bytes	11Mbps	-85dBm
		5.5Mbps	-88dBm
		2Mbps	-89dBm
		1Mbps	-91dBm
	PER＜ 10%@11g PSDU=1000Bytes	6Mbps	-89dBm
		9Mbps	-88dBm
		12Mbps	-85dBm
		18Mbps	-83dBm
		24Mbps	-80dBm
		36Mbps	-76dBm
		48Mbps	-71dBm
		54Mbps	-70dBm
	PER＜ 10%@11n HT20 PSDU=1024Bytes	MCS0/8	-83dBm
		MCS1/9	-80dBm
		MCS2/10	-78dBm
		MCS3/11	-75dBm

		MCS4/12	-71dBm
		MCS5/13	-67dBm
		MCS6/14	-66dBm
		MCS7/15	-65dBm
	FER＜10%@11n HT40 PSDU=1024Bytes	MCS0/8	-80dBm
		MCS1/9	-77dBm
		MCS2/10	-75dBm
		MCS3/11	-72dBm
		MCS4/12	-68dBm
		MCS5/13	-64dBm
		MCS6/14	-63dBm
		MCS7/15	-62dBm
throughput	11b		≥5Mbps
	11g		≥20Mbps
	11n（HT20）		≥85Mbps
	11n（HT40）		≥160Mbps

3 Hardware Description

CPQ236 provides the following peripheral interface：

interface	description
Power input	3.2V – 3.4V DC（advice 3.3V DC）
USB	Support USB2.0 Full speed/High speed mode
UART	2-wire UART synchronous communication, debug software
GPIOs	Many programmable gpios for device function expansion
LAN/WAN	1WAN 4LAN
Antenna port	antenna connection and RF performance testing

3.1 Pin definition

The CPQ236 module provides 60 direct pins.

PIN No.	Network	Type	Description	PIN No.	Network	Type	Description
1	GND	G	GND	2	GND	G	GND
3	LED_link_4			4	P2_RX+	I/O	network port2 data receiving+
5	LED_link_3			6	P2_RX-	I/O	network port2 data receiving-
7	LED_link_2			8	P2_TX+	I/O	network port2 data sending+
9	GND	G	GND	10	P2_TX-	I/O	network port2 data sending-
11	P3_TX+	I/O	network port3 data sending+	12	GND	G	GND
13	P3_TX-	I/O	network port3	14	P1_TX+	I/O	network port1 data

			data sending-				sending+
15	P3_RX+	I/O	network port3 receiving+	16	P1_TX-	I/O	network port1 data sending-
17	P3_RX-	I/O	network port3 receiving-	18	P1_RX+	I/O	network port1 data receiving+
19	VDD33	P	3.3V input	20	P1_RX-	I/O	network port1 data receiving-
21	VDD33	P	3.3V input	22	GND	G	GND
23	GPIO0	I/O		24	P4_RX+	I/O	network port4 data receiving+
25	GPIO1	I/O		26	P4_RX-	I/O	network port4 data receiving-
27	GPIO2	I/O		28	P4_TX+	I/O	network port4 data sending+
29	GPIO3	I/O		30	P4_TX-	I/O	network port4 data sending-
31	NC			32	P0_RX+	I/O	network port0 data receiving+
33	NC			34	P0_RX-	I/O	network port0 data receiving-
35	USB_DP	I/O		36	P0_TX+	I/O	network port0 data sending+
37	USB_DM	I/O		38	P0_TX-	I/O	network port0 data sending-
39	GPIO13	I/O		40	GND	G	GND
41	VDD25	P		42	AVDD20	P	output 2.0V
43	RESET	I/O	reset pin	44	AVDD20	P	output 2.0V
45	GPIO17_	I/O		46	GND	G	GND

47	GND	G	GND	48	SPI_MISO	I/O	
49	VDD33	P	3.3V input	50	SPI_CLK	I/O	
51	VDD33	P	3.3V input	52	SPI_MOSI	I/O	
53	GPIO4	I/O		54	GPIO16	I/O	
55	NC			56	GPIO12	I/O	
57	UARTA_RX	I/O	data receiving	58	UARTA_TX	I/O	data sending
59	GND	G	GND	60	GND	G	GND

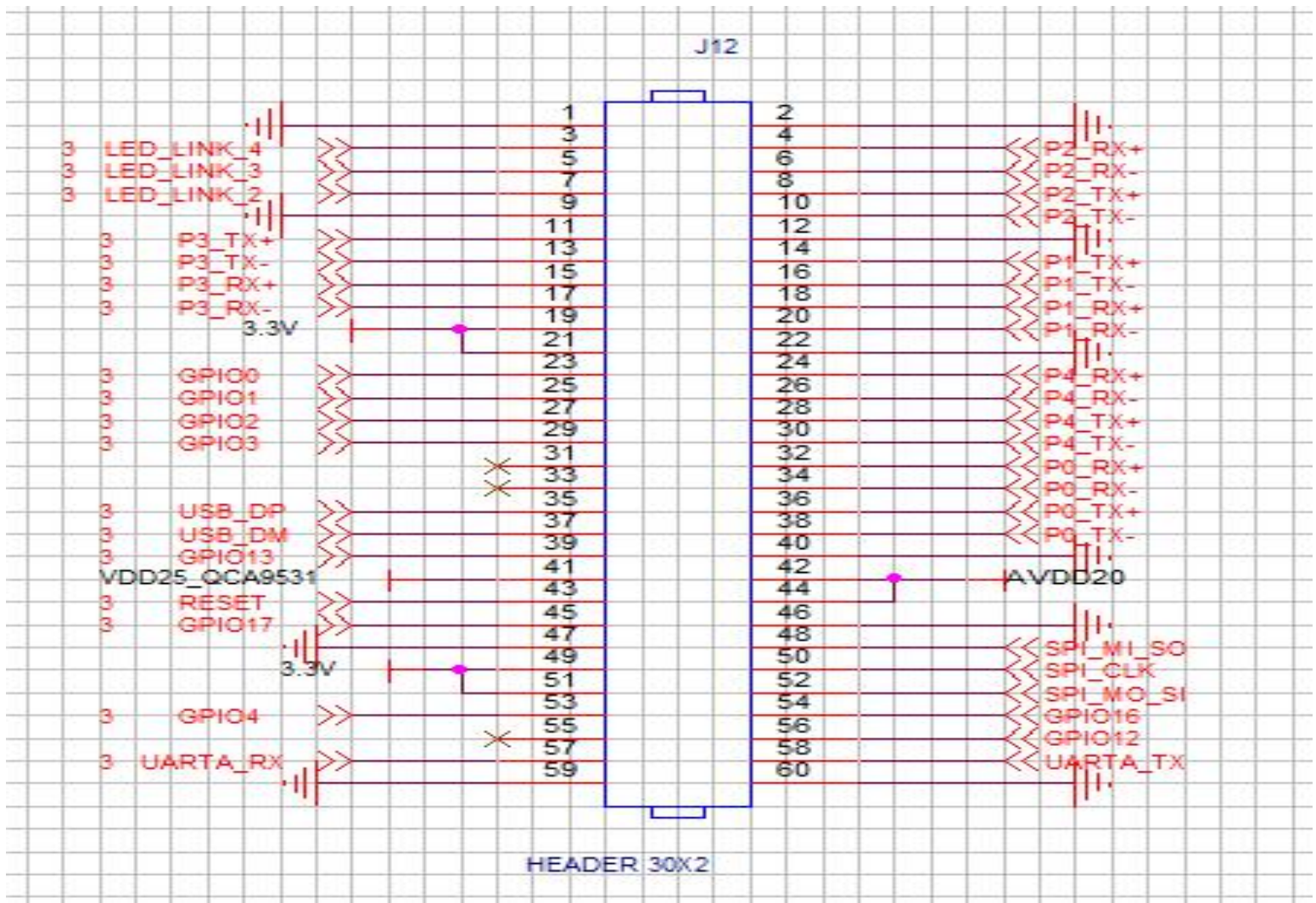

Figure 1-2 CPQ236 Module Pin description

3.2 power supply

VCC input current supply may reach more than 2A, so it is recommended to use more than 2A of the power supply. LDO or switching power supply with current output capability greater than 2A is recommended, and parallel capacitors at the power port of the module are recommended.

The reference circuit is as follows:

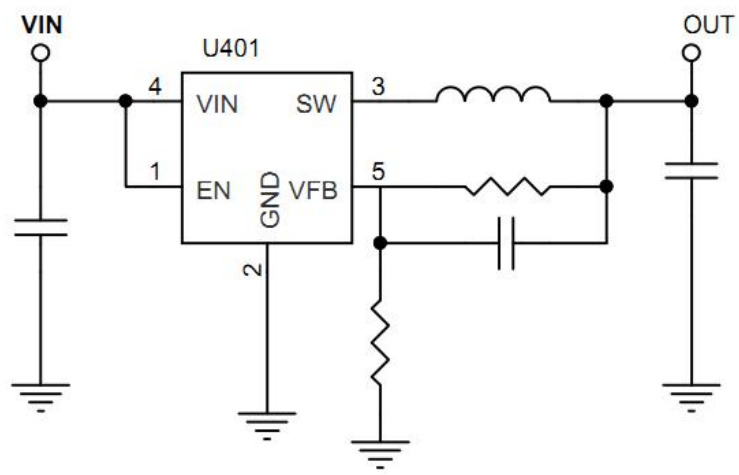

3.3 USB

The CPQ236 module has a standard USB2.0 interface, which supports two speeds of High speed(480Mbps)and Full peed (12 Mbps). It works in HOST mode and DEVICE mode.

The reference circuit is as follows:

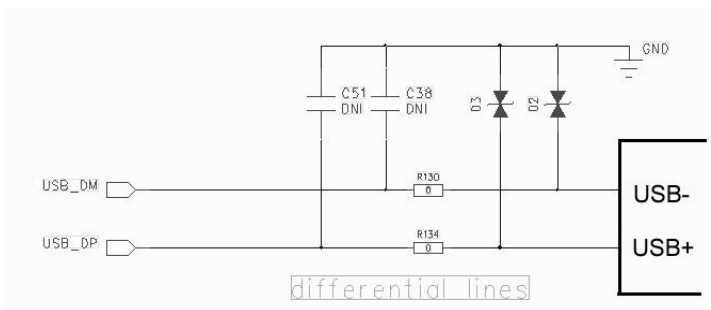

3.4 UART interface

CPQ236 provides a set of 2 UART line interface, defined as follows:

Description of pin	name	name	describe
57	UARTA_RX	I	Serial port receiving
58	UARTA_TX	O	Serial port sending

CPQ236 UART for debugging, print information.

3.5 Network port

CPQ236 provides 5 outlets

The method can refer to the following:

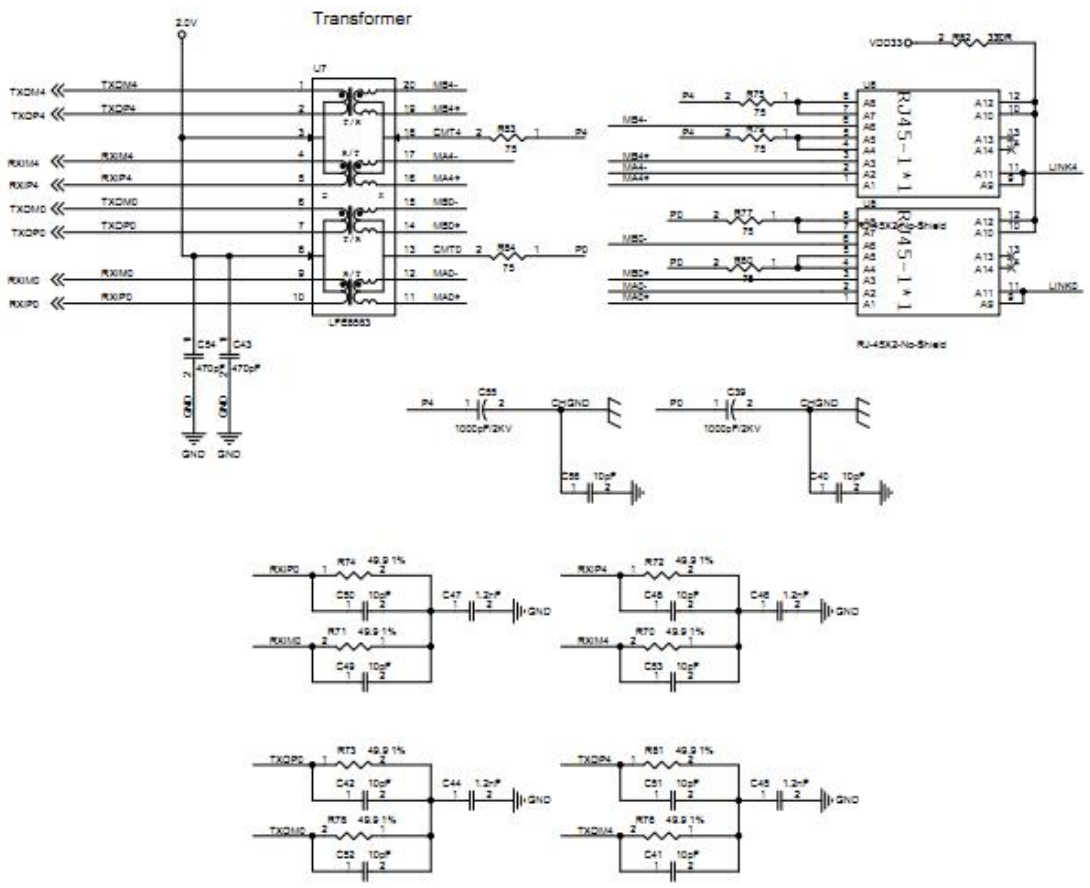

3.6 Reset

Description of pin	name	name	describe
43	RESET	I/O	reset

3.7 GPIO

CPQ236 provides the GPIO interface, defined as following:

Description of pin	name	name	describe
54	GPIO16	I/O	GPIO
39	GPIO13	I/O	GPIO
56	GPIO12	I/O	GPIO
45	GPIO17	I/O	GPIO
53	GPIO4	I/O	GPIO
23	GPIO0	I/O	GPIO
29	GPIO3	I/O	GPIO
27	GPIO2	I/O	GPIO
25	GPIO1	I/O	GPIO

4 Structure encapsulation
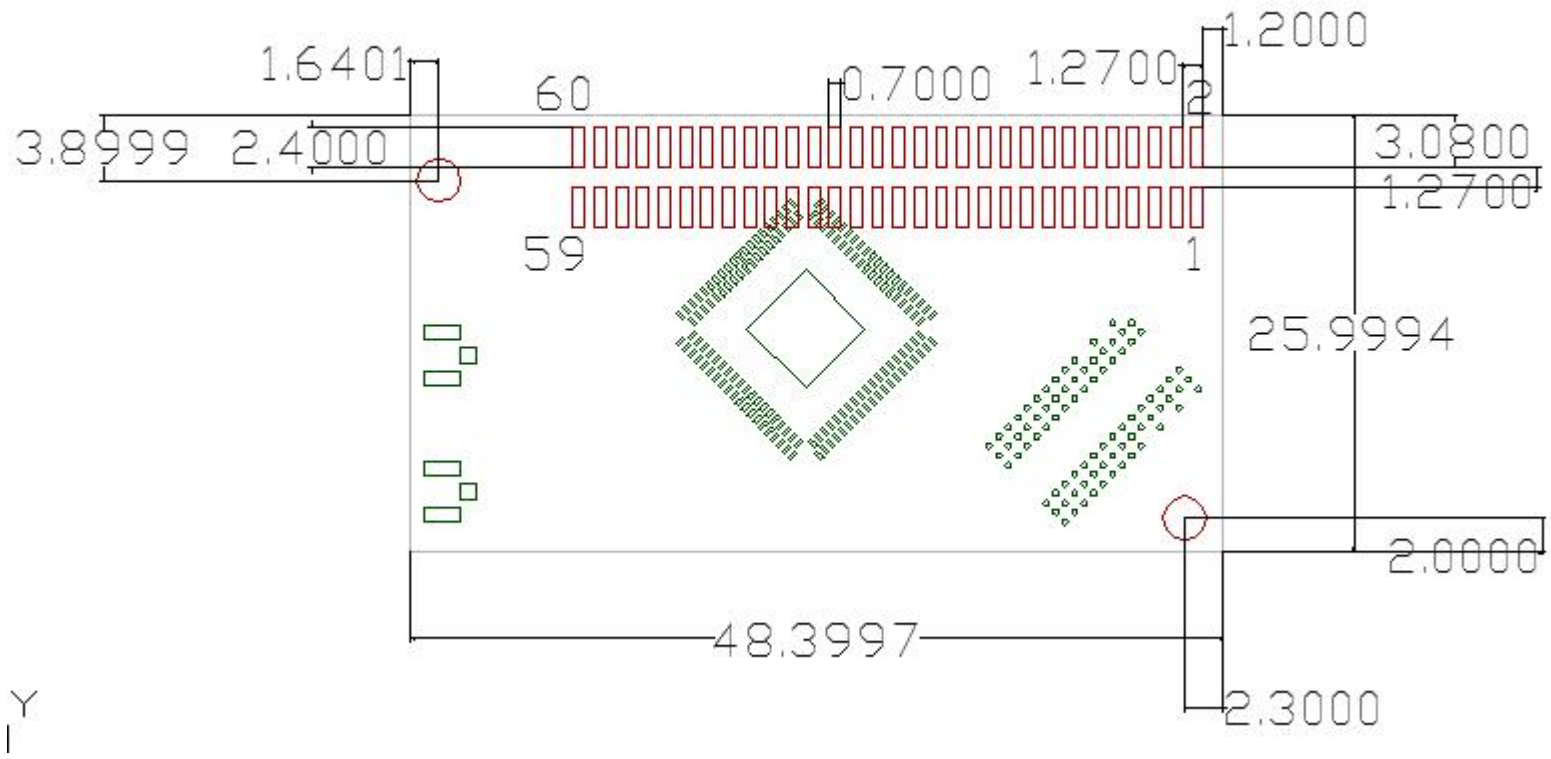
The recommended PCB package is as follows: mm