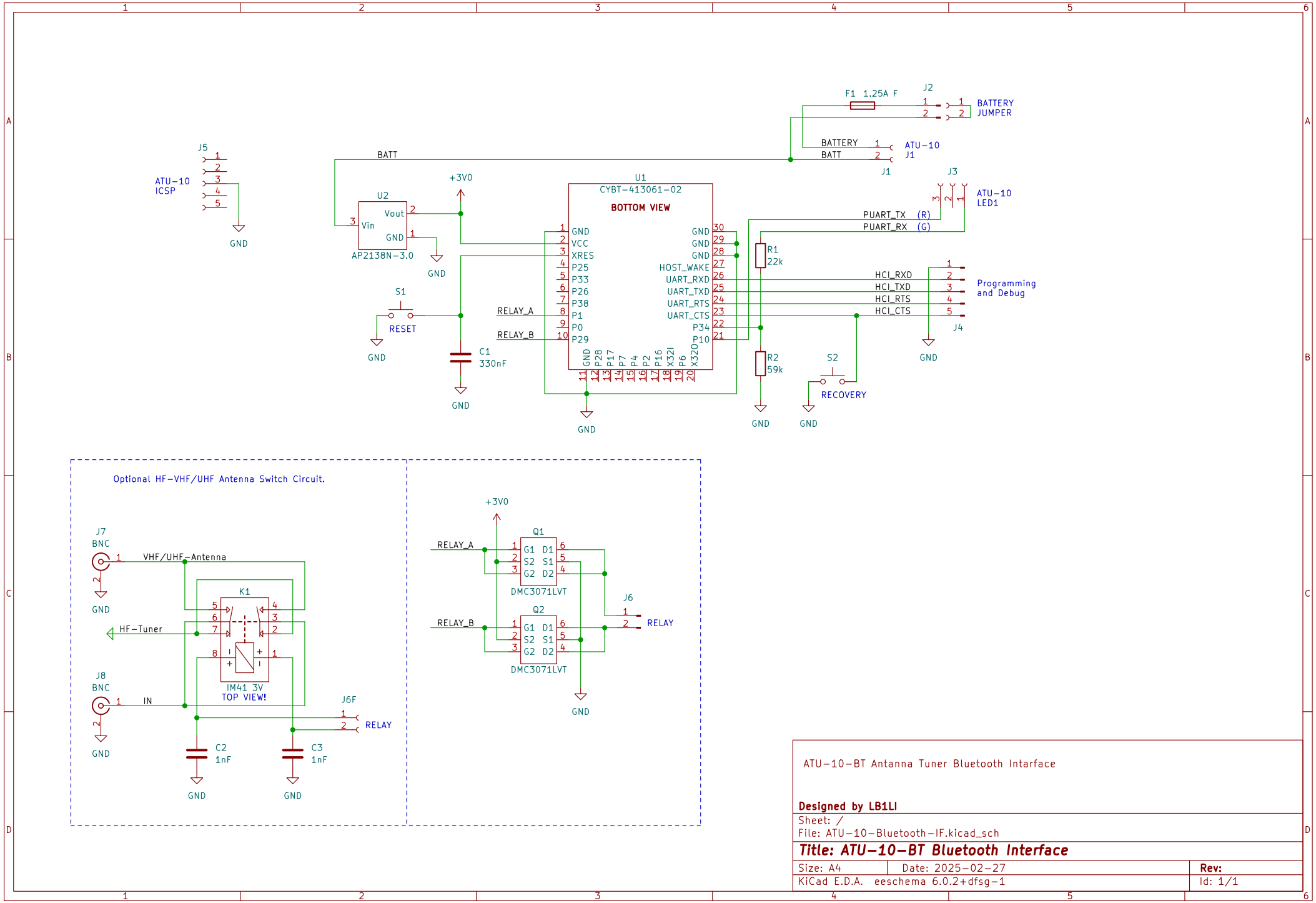

ATU-10-BT Antanna Tuner Bluetooth Intarface

Designed by LB1LI

Sheet: /
File: ATU-10-Bluetooth-IF.kicad_sch

Title: ATU-10-BT Bluetooth Interface

Size: A4	Date: 2025-02-27	**Rev:**
KiCad E.D.A. eeschema 6.0.2+dfsg-1		Id: 1/1