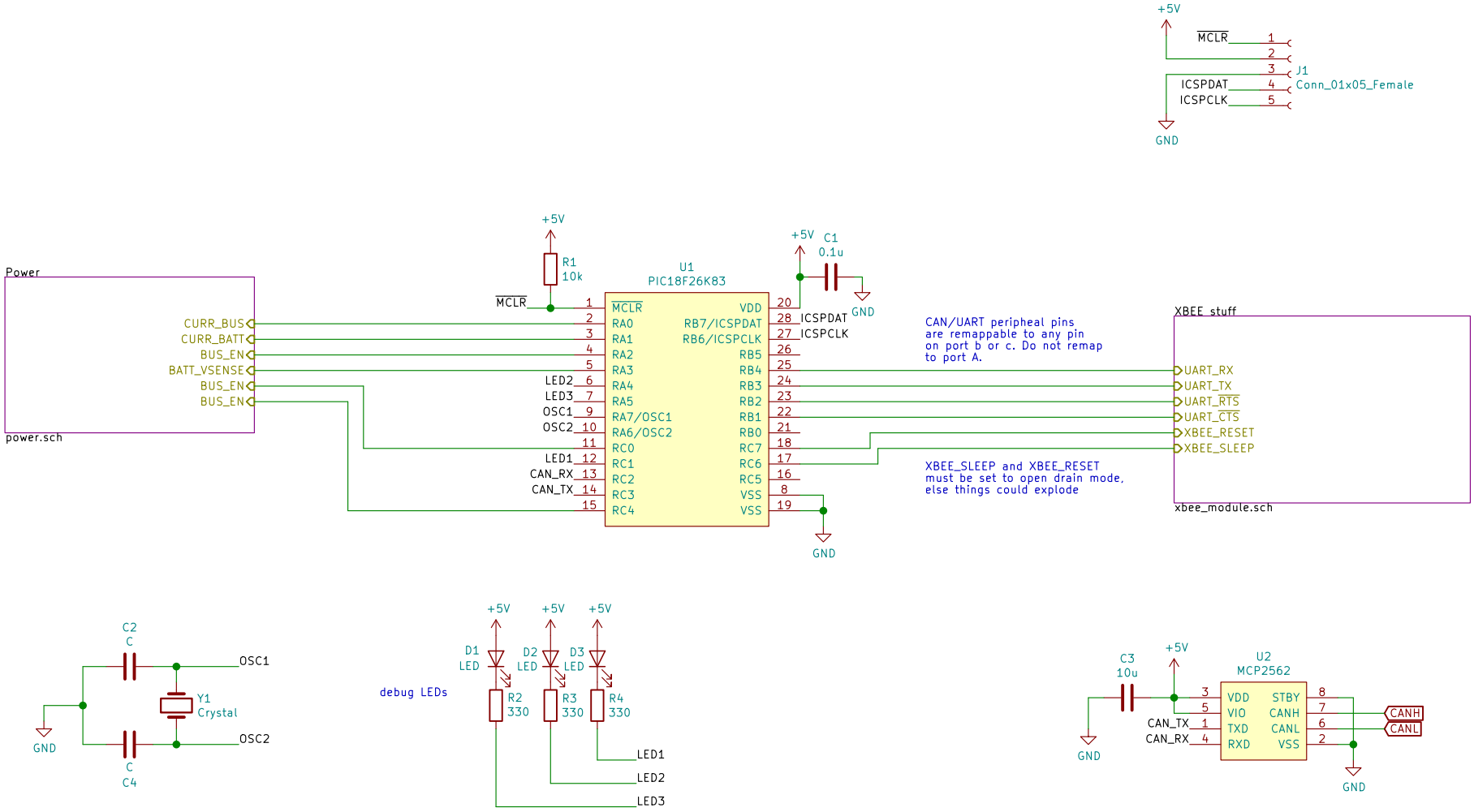

Sheet: /
File: radio.sch

Title:

Size: A4	Date:	Rev:
KiCad E.D.A. eeschema (5.0.1-3-g963ef8bb5)		Id: 1/3

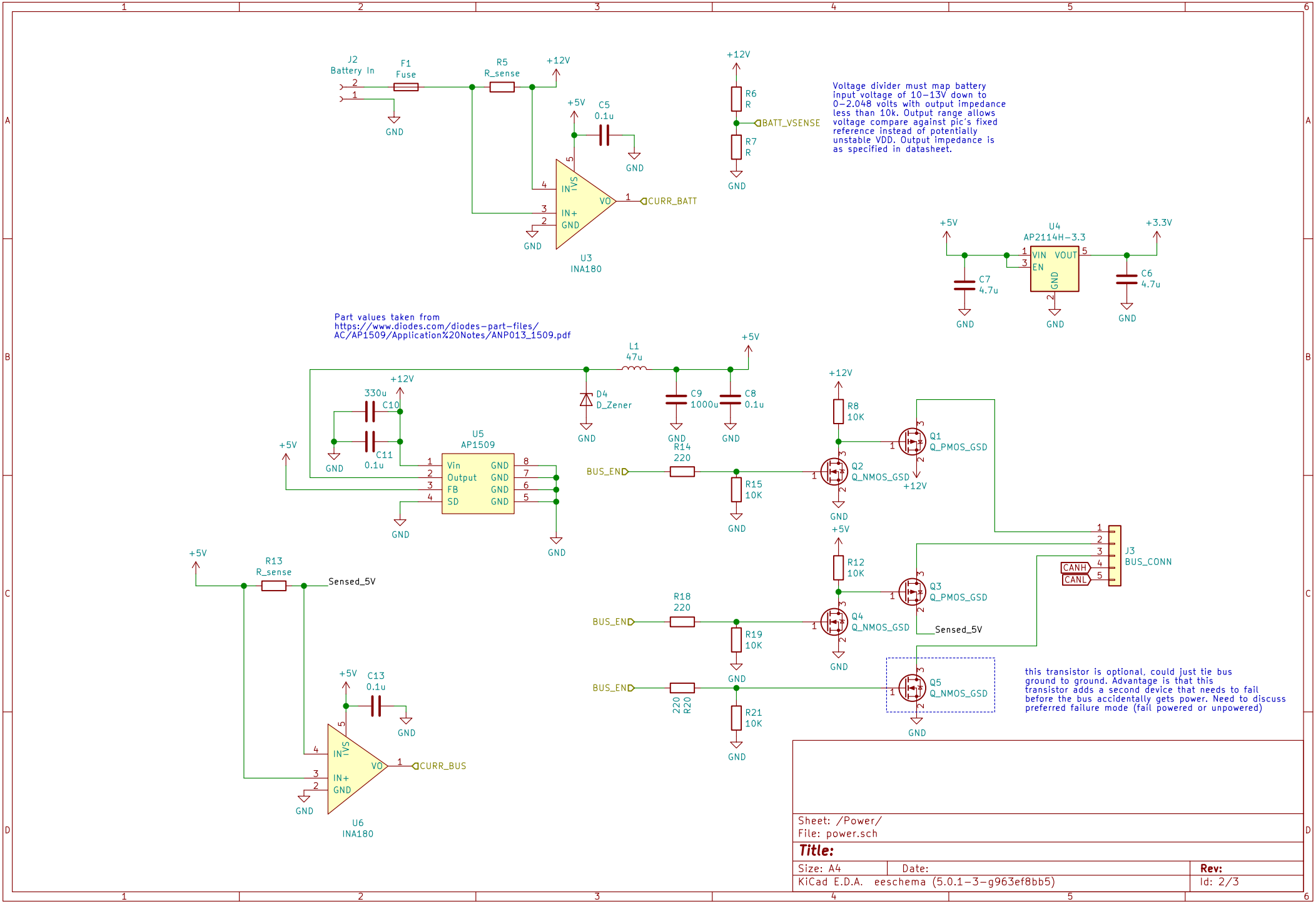

Sheet: /Power/
File: power.sch

Title:

Size: A4	Date:	Rev:
KiCad E.D.A. eeschema (5.0.1-3-g963ef8bb5)		Id: 2/3

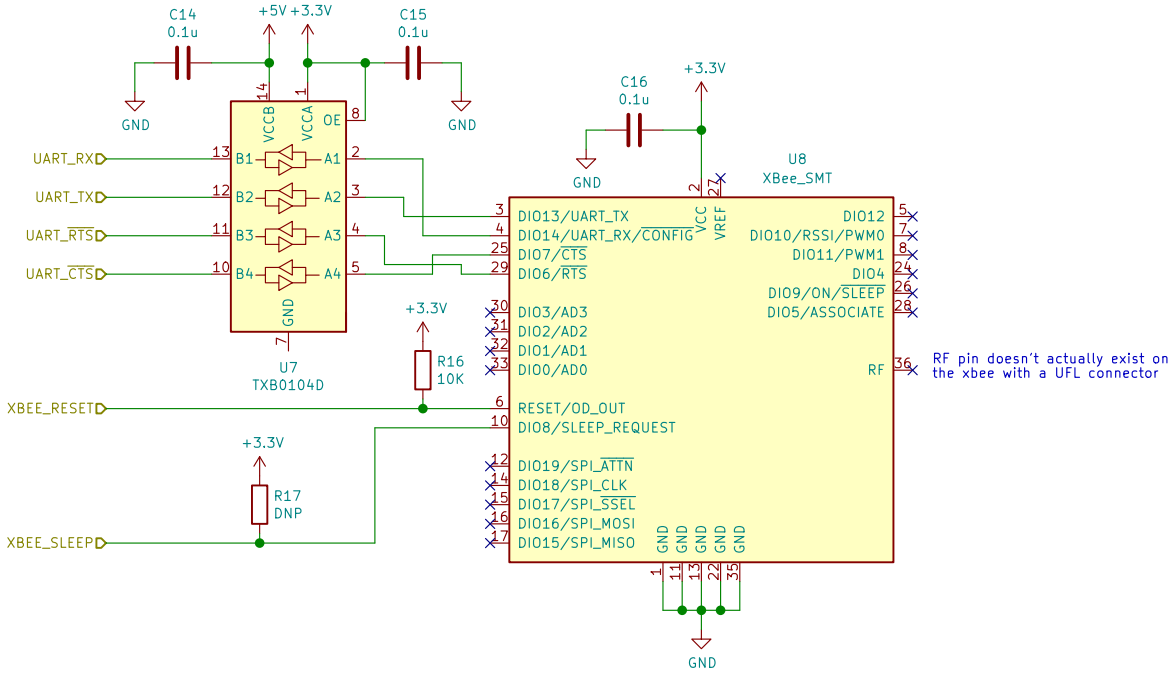

Sheet: /XBEE stuff/
File: xbee_module.sch

Title:

Size: A4	Date:	**Rev:**
KiCad E.D.A. eeschema (5.0.1-3-g963ef8bb5)		Id: 3/3