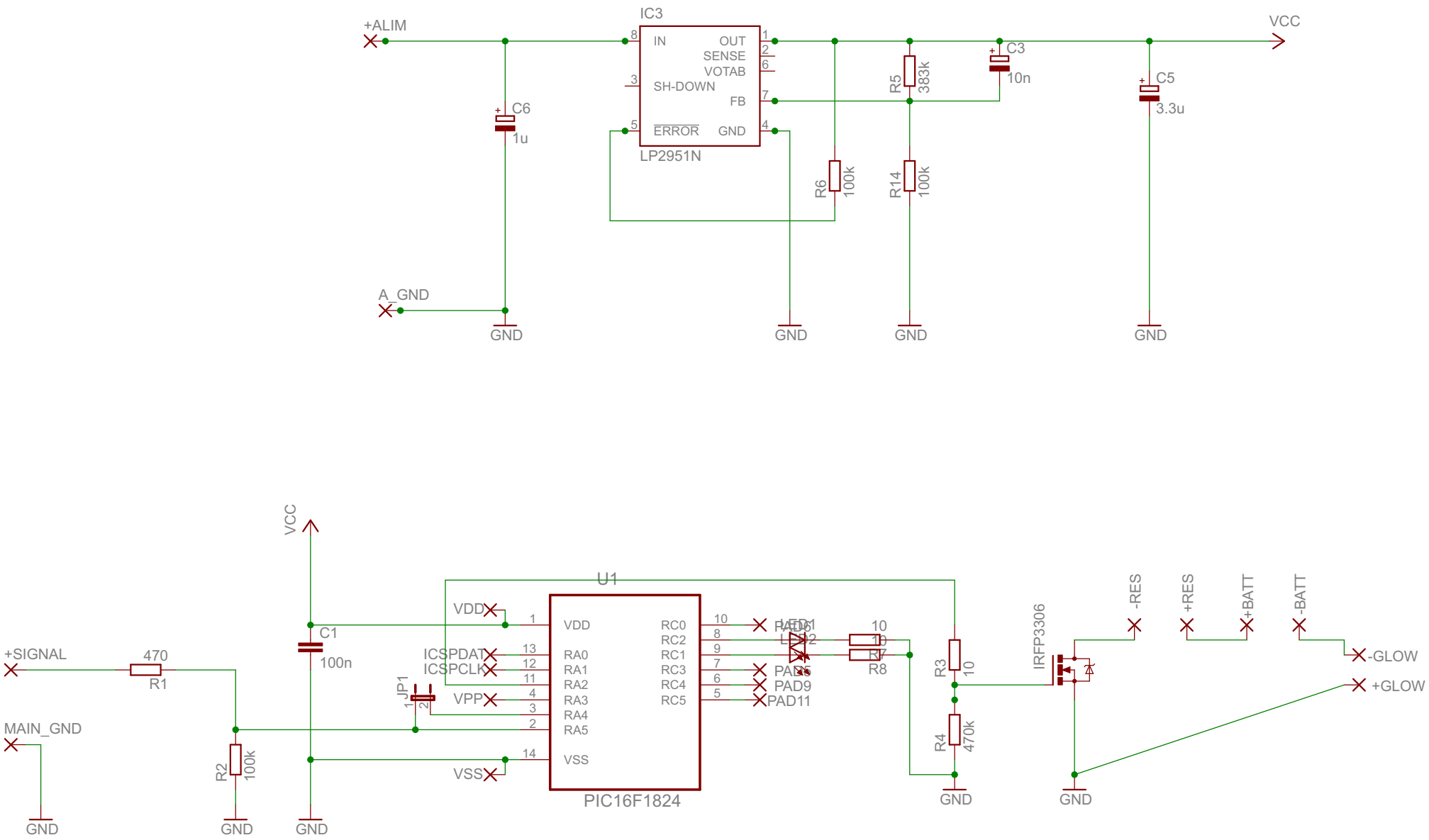
+ALIM
IC3
IN
OUT
SENSE
VOTAB
SH-DOWN
FB
ERROR
GND
LP2951N
VCC
C6
1u
C3
10n
C5
3.3u
R5
383k
R6
100k
R14
100k
A_GND
GND
GND
GND
GND
VCC
U1
VDD
ICSPDAT
ICSPCLK
VPP
VSS
RA0
RA1
RA2
RA3
RA4
RA5
RC0
RC2
RC1
RC3
RC4
RC5
PAD9
PAD11
PIC16F1824
+SIGNAL
470
R1
MAIN_GND
R2
100k
C1
100n
JP1
10
R8
R3
10
R4
470k
IRFP3306
-RES
+RES
+BATT
-BATT
-GLOW
+GLOW
GND
GND
GND
GND
GND