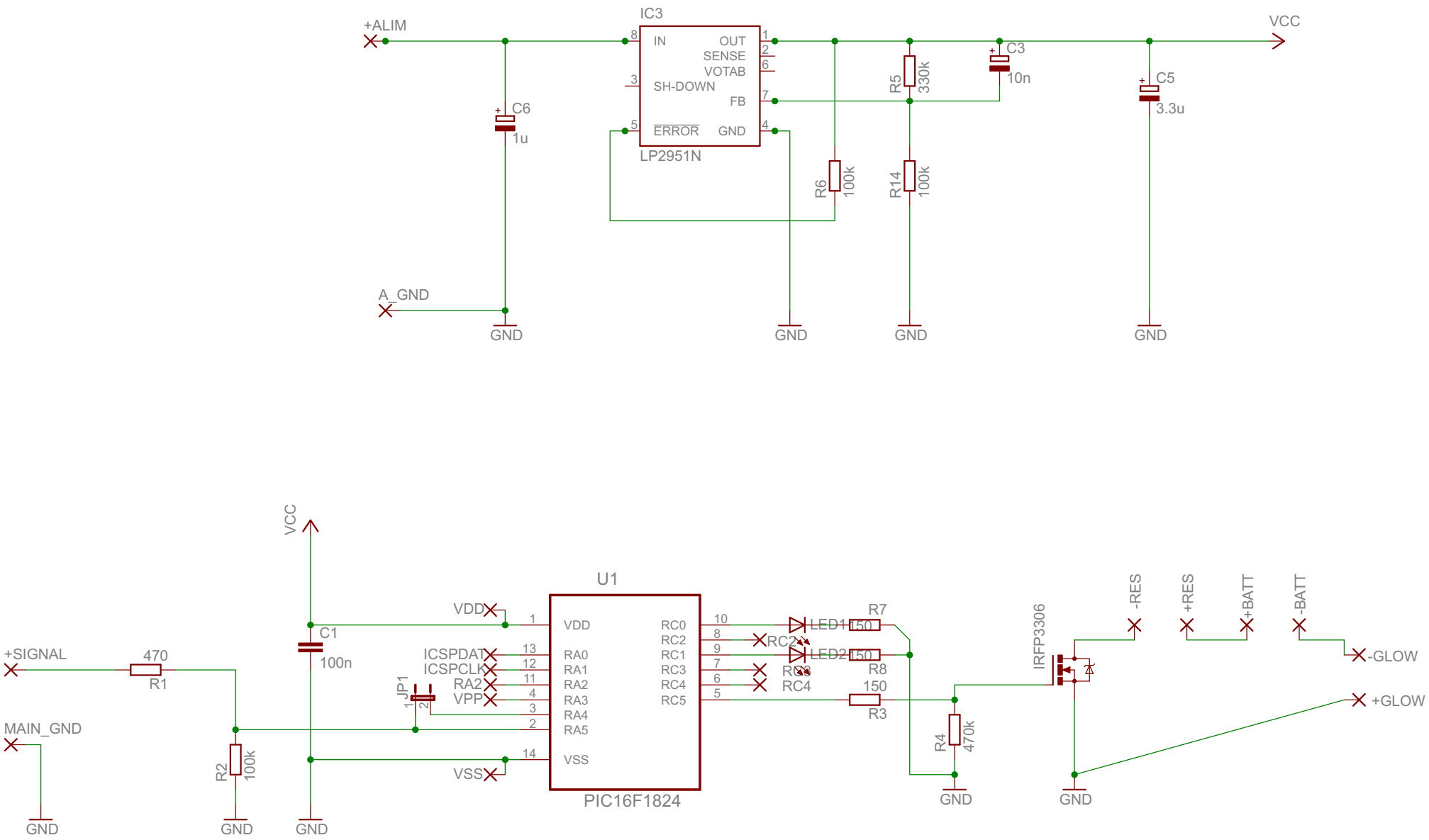
+ALIM
IC3
IN
OUT
SENSE
VOTAB
SH-DOWN
FB
ERROR
GND
LP2951N
VCC
C6
1u
C3
10n
C5
3.3u
R5
330k
R6
100k
R14
100k
A_GND
GND
GND
GND
GND
VCC
U1
VDD
RC0
RC2
RC1
RC3
RC4
RC5
RA0
RA1
RA2
RA3
RA4
RA5
VSS
PIC16F1824
C1
100n
VDD
ICSPDAT
ICSPCLK
RA2
VPP
VSS
JP1
+SIGNAL
470
R1
MAIN_GND
R2
100k
GND
GND
GND
LED1
LED2
150
R7
R8
150
R3
RC2
RC3
RC4
R4
470k
GND
IRFP3306
GND
-RES
+RES
+BATT
-BATT
-GLOW
+GLOW