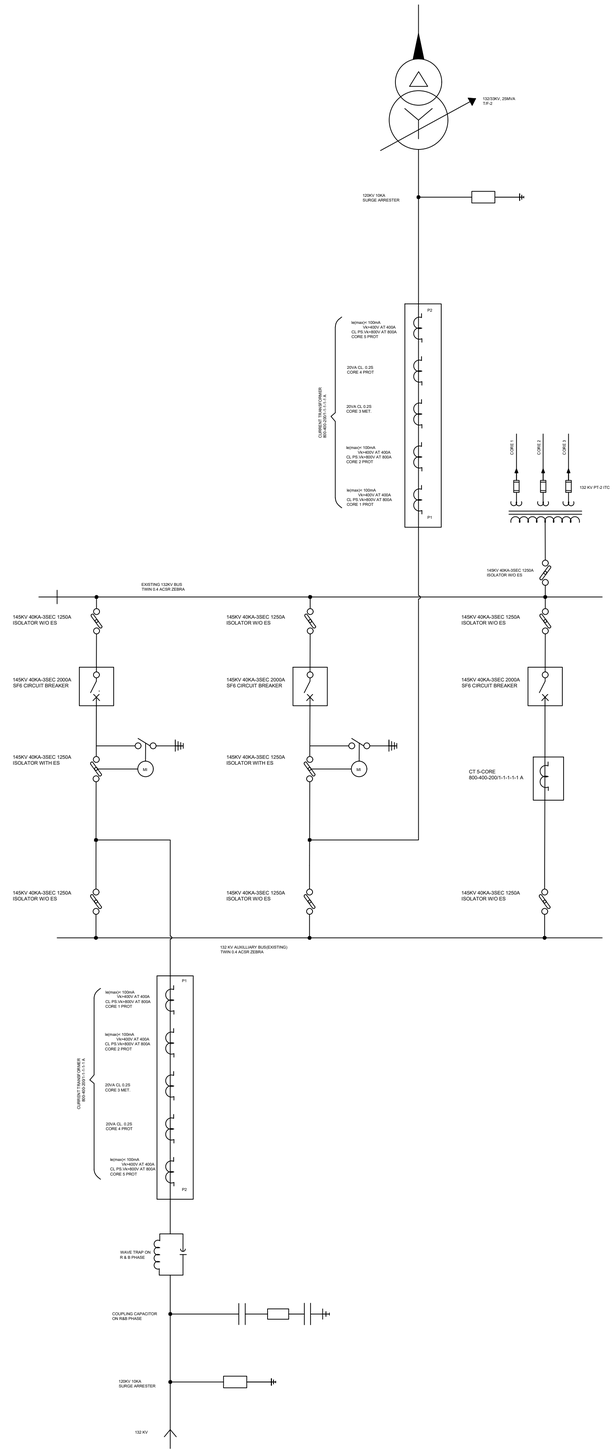

SR.NO.	DESCRIPTION	SLD	QTY
1.	SURGE ARRESTER		3
2.	CENTER POST ROTATING DOUBLE BREAK ISOLATOR WITH EARTH SWITCH WITH MECHANICAL INTERLOCK(MI)		1
3.	CENTER POST ROTATING DOUBLE BREAK ISOLATOR WITHOUT EARTH SWITCH		2
4.	CIRCUIT BREAKER		1
5.	CURRENT TRANSFORMER 5-CORE 800-400/1-1-1-1-1A		3
6.	CURRENT TRANSFORMER (MAIN & CHECK)		3
7.	CURRENT TRANSFORMER (STANDBY)		3
8.	VOLTAGE TRANSFORMER (MAIN & CHECK MET)		1
9.	VOLTAGE TRANSFORMER (STANDBY)		1