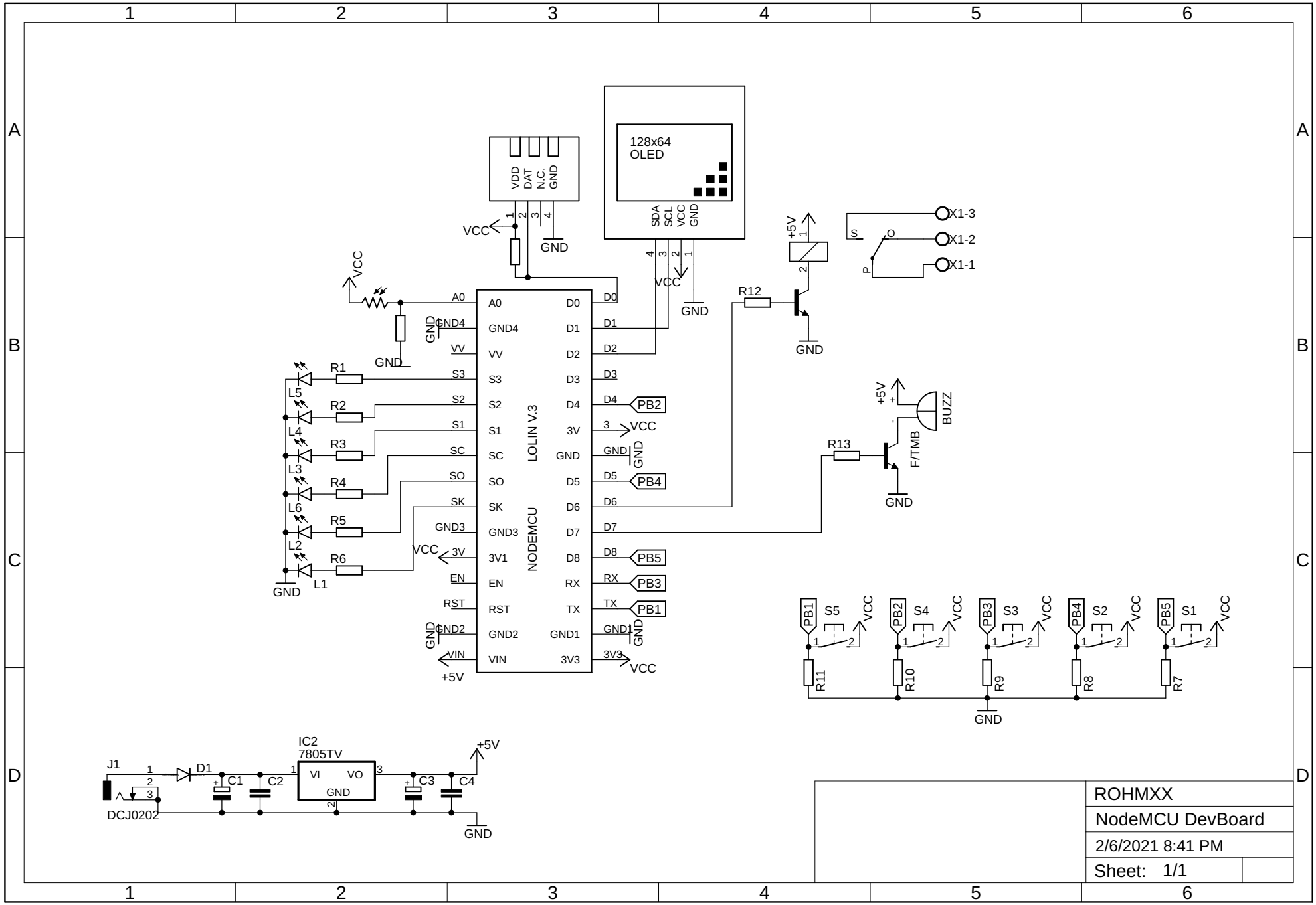
128x64
OLED
VDD
DAT
N.C.
GND
SDA
SCL
VCC
GND
LOLIN V.3
NODEMCU
A0
GND4
VV
S3
S2
S1
SC
SO
SK
GND3
3V1
EN
RST
GND2
VIN
D0
D1
D2
D3
D4
3V
GND
D5
D6
D7
D8
RX
TX
GND1
3V3
PB2
PB4
PB5
PB3
PB1
R1
R2
R3
R4
R5
R6
R7
R8
R9
R10
R11
R12
R13
L1
L2
L3
L4
L5
L6
VCC
GND
+5V
X1-3
X1-2
X1-1
BUZZ
F/TMB
S5
S4
S3
S2
S1
J1
DCJ0202
D1
C1
C2
C3
C4
IC2
7805TV
VI
VO
ROHMXX
NodeMCU DevBoard
2/6/2021 8:41 PM
Sheet: 1/1