EM OIL SEALED ROTARY VANE PUMPS

EM single and two stage oil sealed rotary vane pumps are renowned for achieving high ultimate vacuum and rapid pumping speeds, with quiet operation and compact size. These pumps have been proven to provide long term reliable performance over many years in a range of scientific and laboratory applications, and are the ideal partner for your turbomolecular pump.

PRODUCT FEATURES

HIGH QUALITY OILS

with additives to prolong life whilst not impacting vapour pressure.

LARGE WATER VAPOUR HANDLING CAPACITY

gas ballast valve.

NO CUSTOMER WIRING

integral IEC connector.

VISUAL INSPECTION OF OIL LEVEL AND CONDITION

O ring sealed sight glass.

LOW SURFACE TEMPERATURE

forced air cooling.

WIDE VOLTAGE MOTORS

all major countries covered with less variants.

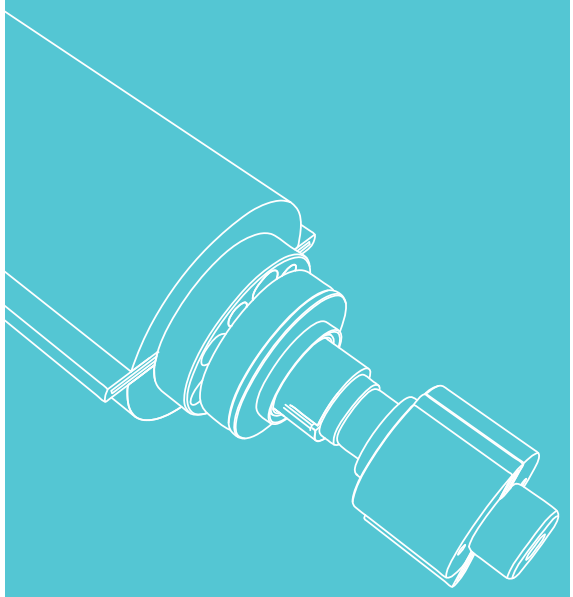

Technical data

	Units	E2M0.7	E2M1.5	E1M18	E2M18	E2M28
MOTOR DATA						
Peak pumping speed, 50 Hz (60 Hz)	m^3h^{-1} (cfm)	0.75 (0.5)	1.6 (1.2)	17 (12.1)	17 (12.1)	27.5 (19.5)
Ultimate vacuum[1]	mbar (Torr)	3×10^{-3} (2.3×10^{-3})			1×10^{-3} (7.5×10^{-4})	
Ultimate pressure with gas ballast	mbar (Torr)	2×10^{-1} (1.5×10^{-1})	2.5×10^{-2} (1.9×10^{-2})	6.5×10^{-1} (4.8×10^{-1})	1.5×10^{-2} (1.1×10^{-2})	
Ultimate pressure with PFPE oil	mbar (Torr)			3×10^{-1} (2.3×10^{-1})	1×10^{-2} (7.5×10^{-3})	1×10^{-2} (7.5×10^{-3})
Water vapour tolerance	mbar (Torr)	15 (11)		50 (38)	20 (15)	30 (23)
Water vapour handling capacity	gh^{-1}	8	16	650	300	700
Maximum continuous inlet pressure	mbar a (Torr a)	1013 (760)				
Maximum gas ballast/purge pressure	bar gauge (psig)	0.5 (7)				
MOTOR DATA						
Supply voltage	V	100-120/200-240 (+/- 10%)		115/200-230 (+/- 10%)		
Supply frequency	Hz	50/60				
Motor power, 50 Hz (60 Hz)	W	90 (90)	160 (160)	550 (750)		750 (900)
Nominal rotation speed, 50 Hz (60 Hz)	rpm	1400 (1700)	2800 (3400)	1440 (1720)		
Power connector [2]		IEC EN60320 C13		IEC EN60320 C19		
Recommended fuse, 230 V (115 V)	A	6 (10)		15 [3] (25)		
PHYSICAL DATA						
Weight	kg (lb)	10 (22)		37 (82)	39 (86)	44 (97)
Oil type (recommended)		Ultragrade 15		Ultragrade 19		
Oil capacity (min - max)	litre	0.2 - 0.28		0.9 - 1.4	0.75 - 1.05	1.2 - 1.5
Inlet connection		NW10		NW25		
Exhaust connection [4]		Nozzle 11 mm external Ø removable from 3/4 in BSP tapped hole		Nozzle 15 mm external Ø removable from 3/4 in BSP tapped hole		
Noise level at ultimate (50 Hz)	dB(A)	43	54	57		
Noise with acoustic enclosure	dB(A)	36	47	50		
Vibration at inlet flange	mms^{-1} (rms)	No data			< 4.5	
Operating temperature range	˚C (˚F)	12 to 40 (54 to 104)		13 to 40 (55 to 104)		

(1) measured as total pressure
(2) pumps listed with IEC connector only
(3) for UK 240 V use 13 A fuse
(4) PFPE variants are supplied with NW25 outlet connection

E2M0.7

E2M1.5

E1M18

E2M18

E2M28

Dimensions

E2M0.7/E2M1.5

1. 220-240 V motor
2. Handle (can be removed)
3. Alternative inlet port position

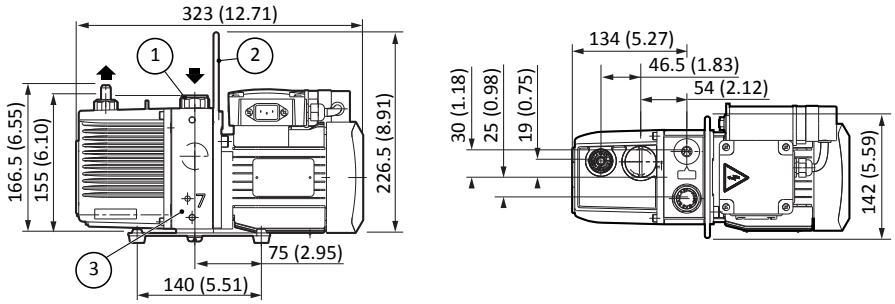

E1M18/E2M18 and E2M28

Single phase pump shown,
3 phase pump is similar.

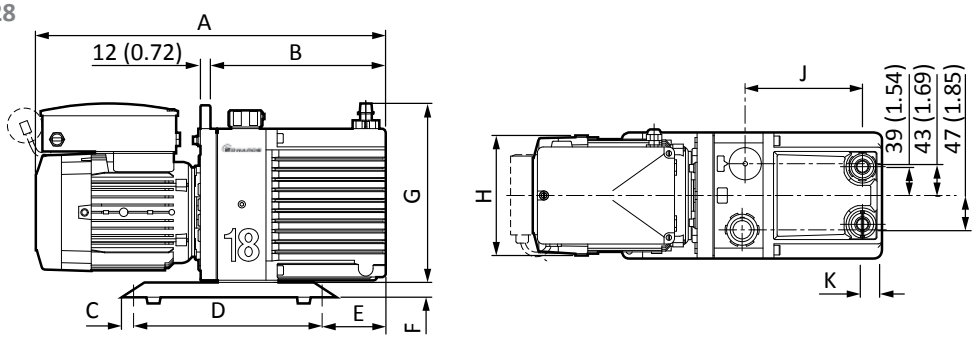

	A	B	C	D	E	F	G	H	J	K
E1M18	504 (19.84)	247 (9.72)	10 (0.39)	260 (10.24)	83 (3.27)	20 (0.79)	251 (9.88)	170 (6.69)	159 (6.26)	27.4 (1.08)
E2M18	550 (21.65)	295 (11.61)	10 (0.39)	260 (10.24)	131 (5.16)	20 (0.79)	251 (9.88)	170 (6.69)	207 (8.15)	27.4 (1.08)
E2M28	584 (22.99)	331 (13.03)	13 (0.51)	347 (13.66)	111 (4.37)	20 (0.79)	251 (9.88)	170 (6.69)	240.5 (9.47)	25.5 (1.00)

Performance

E2M0.7 and E2M1.5

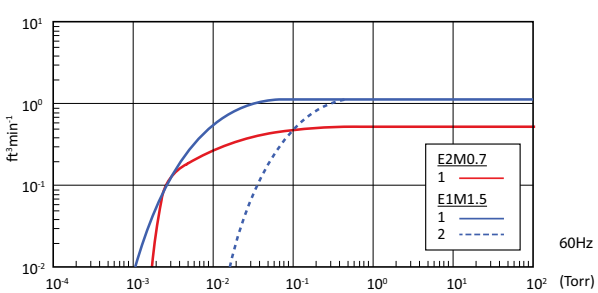

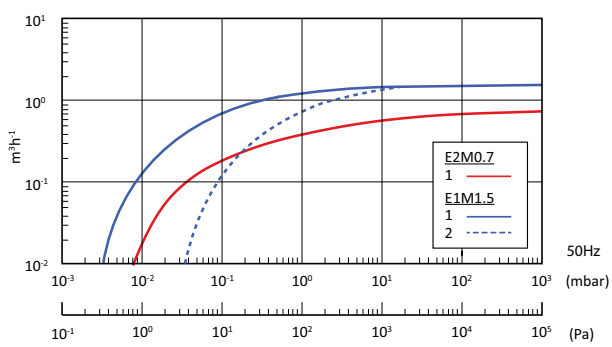

E1M18/E2M18 and E2M28

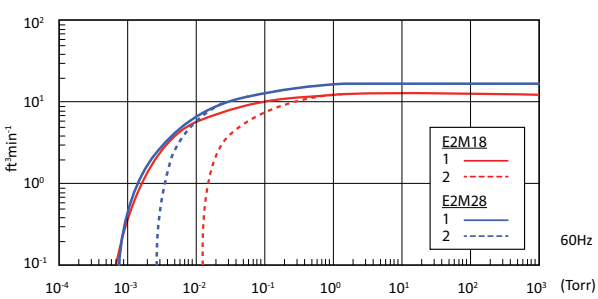

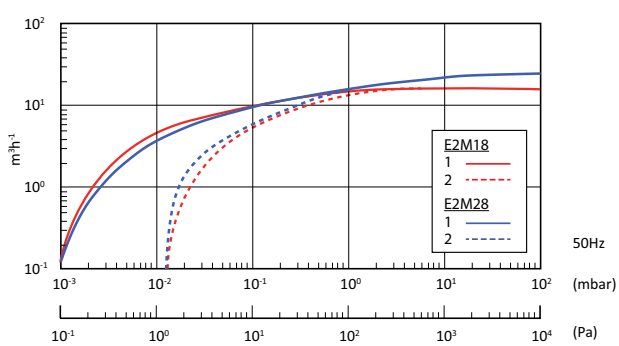

1. without gas ballast
2. with gas ballast

Ordering information

Pumps:

Product description	Order no.	
	Ultragrade	PFPE
E2M0.7 200-230V, 1-ph, 50/60Hz, IEC 60320 connectors	A37141919	-
E2M0.7 100-120V, 1-ph, 50/60Hz, IEC 60320 connectors	A37141902	-
E2M1.5 200-230V, 1-ph, 50/60Hz, IEC 60320 connectors	A37132919	-
E2M1.5 100-120V, 1-ph, 50/60Hz, IEC 60320 connectors	A37132902	-
E1M18 200-230/380-415V, 3-ph, 50Hz or 200-230/460V, 3-ph, 60Hz	A34310940	-
E1M18 115/200-230V, 1-ph, 50/60Hz with IEC60320 connector, factory set to 230V	A34317984	A34325984
E2M18 200-230/380-415V, 3-ph, 50Hz or 200-230/460V, 3-ph, 60Hz	A36310940	A36321940
E2M18 115/200-230V, 1-ph, 50/60Hz with IEC60320 connector	A36317984	A36325984
E2M28 HC IE3 EU/US 50/60Hz, 380-400V 3-ph, 50Hz or 230/460V 3-ph, 60Hz	A37333940	A37343940
E2M28 HC IE3 Asia 50/60Hz, 200V 3-ph, 50/60Hz or 380V 3-ph, 60Hz	A37333934	A37343934
E2M28 115/200-230 V, 1-ph, 50/60 Hz with IEC60320 connector	A37317984	A37325984

Accessories and spares:

Product	Product description		Order no.
E2M0.7/1.5	Accessories	Oil mist filter - EMF3	A46220000
		NW10 x 3/8” BSP adapter	A23908064
		Vibration isolator (pack of 4)	A24801407
	Spares	Clean and overhaul kit - E2M0.7/1.5	A37101131
		Spares kit blade - E2M0.7/1.5	A37101132
	Oil	Ultragrade 15, 1 litre bottle	H11026015
		Ultragrade 15, 4 litre bottle	H11026013
	Cord sets	UK, three pin plug	A50505000
		North European plug	A50506000
		North America/Japan plug	A50507000
		No plug	A50508000
E1M18/ E2M18/ E2M28	Accessories	Oil mist filter - EMF20 (1)	A46229000
		Oil mist filter - MF30	A46233000
		NW25 to 28mm bore tube adaptor	C10520201
		¾” BSP to NW25 outlet adaptor	C10501414
		E1M18/E2M18 Vibration isolator (pack of 4)	A24801404
		E2M28 Vibration isolator (pack of 4)	A24801412
		Acoustic Enclosure 110-120 V	NRD317000
		Acoustic Enclosure 200-240 V	NRD318000
	Spares	Clean and overhaul kit - E1M18/E2M18	A36301131
		Spares kit blade - E1M18	A34301041
		Spares kit blade - E2M18	A36301020
		Clean and overhaul kit - E2M28	A37301131
		Blade kit - E2M28/30	A37301135
	Oil	Ultragrade 19, 1 litre bottle	H11025015
		Ultragrade 19, 4 litre bottle	H11025013
		Fomblin® YVAC 06/6 fluid 1 kg (532 ml)	H11301019
		Fomblin® YVAC 06/6 fluid 5 kg (2660 ml)	H11301020
	Cord sets	UK, three pin plug	A50505003
		North European plug	A50506003
		North America/Japan plug	A50507003
		No plug	A50508003

(1) suitable for EM18 and E2M28 on low throughput applications

Extended warranty:

Product	2 year extension	3 year extension
E2M0.7	EW2AA5013	EW3AA5013
E2M1.5	EW2AA5014	EW3AA5014
E1M18	EW2AA5023	EW3AA5023
E1M18 PFPE	EW2AA5024	EW3AA5024

Product	2 year extension	3 year extension
E2M18	EW2AA5025	EW3AA5025
E2M18 PFPE	EW2AA5026	EW3AA5026
E2M28	EW2AA5027	EW3AA5027
E2M28 PFPE	EW2AA5028	EW3AA5028