PRODUCT DATA SHEET

XDS DRY SCROLL PUMPS

edwardsvacuum.com

XDS dry scroll pumps have become industry standard when dry pumping is essential, proving to be a robust and clean vacuum pump solution in a range of applications. The XDS35i pump has an innovative bearing shield that isolates the vacuum environment, making it not only lubricant-free but hermetically sealed.

XDS35i No Gas Ballast variant has had the gas ballast feature removed for applications such as rare gas recirculation and gas recovery.

The XDS46i shares many of the same features of the XDS35i but with a peak speed of 40 m^3h^{-1}. The pump has been optimised for maximum pumping speed at inlet pressures between 1 mbar and 10 mbar, making it well suited for backing turbomolecular pumps.

For more aggressive applications, 'C' variants are available which features Chemraz® internal valves and stainless steel fittings for extra protection from the pumped media.

Features and benefits

Bearing shield

ensures separation between process gases and bearing lubrication to ensure clean vacuum and no possibility of contamination to lubrication from process gases, which prolongs bearing life.

Smart motor drive

means consistent performance globally, pump overload protection and remote start/stop capability.

High flow gas ballast feature

allows pumping of vapours including water vapour at up to 240 gh^{-1}.

Axial air gap motor

reduces overall pump size and gives low power and noise.

Simple single sided scroll design

allows maintenance to be done in minutes for low cost of ownership and maximum up-time.

Technical data

	Units	XDS35i	XDS46i
Peak pumping speed	m^3h^{-1} (cfm)	35 (21)	40 (23.5)
Ultimate vacuum [1]	mbar (Torr)	0.01 (0.008)	0.05 (0.04)
Ultimate vacuum with gas ballast 1	mbar (Torr)	0.02 (0.015)	0.08 (0.06)
Ultimate vacuum with gas ballast 2	mbar (Torr)	< 10 (7.5)	
Max inlet pressure for water vapour	mbar (Torr)	35 (23)	40 (30)
Water vapour handling capacity GBII	gh^{-1}	240	
Maximum continuous inlet pressure [2]	mbar a (Torr a)	40 (30)	
Maximum gas ballast/purge pressure	bar gauge (psig)	0.5 (7)	
Motor data			
Supply voltage	V	100-120/200-240 (+/- 10%)	
Supply frequency	Hz	50/60	
Nominal rotation speed	rpm	1750	
Power at ultimate	W	440	380
Motor power	W	520	
Power connector		IEC EN60320 C19	
Recommended fuse, 230 V (115 V)	A	16 [3] (20)	
Physical data			
Weight	kg (lb)	48 (105)	
Inlet connection		NW40	
Exhaust connection		NW25	
Noise level at ultimate	dB(A)	57	55.4
Noise level with acoustic enclosure	dB(A)	48	46.4
Vibration at inlet flange	mms^{-1} (rms)	< 4.5	
Leak tightness (static)	mbar ls^{-1}	$< 1 \times 10^{-6}$	
Operating temperature range	°C (°F)	5 to 40 (41 to 104)	

(1) measured as total pressure
(2) These pumps are designed to pump down from atmospheric pressure, but prolonged operation at inlet pressures higher than specified may reduce bearing life.
(3) for UK 240 V use 13 A fuse

Ordering information

Pumps:

Product description		Order number
Standard product	XDS35i	A73001983
	XDS35iC*	A73006983
	XDS46i	A73101983
	XDS46iC*	A73106983
Variants without gas ballast (NGB)	XDS35i	A73005983

** C variants*

Extended warranty:

Product	2 year	3 year
XDS35i	EW2AA5005	EW3AA5005
XDS46i	EW2AA5006	EW3AA5006

Accessories and spares:

Product description		Order number
Accessories	Exhaust silencer XDS35i	A50597001
	Gas ballast adapter with 0.25 mm restrictor	A50626801
	Gas ballast adaptor with no restrictor	A50502000
	Vibration isolator (pack of 4)	A24801408
	Inlet/exhaust filter NW25	A50597805
	Inlet/exhaust filter NW40	A50597806
	XDS acoustic enclosure 110-120 V	NRY5C0000
	XDS acoustic enclosure 200-240 V	NRD797000
Spares	Tip-seal kit XDS35i	A73001801
	Tip-seal kit XDS46i	A73101801
	Silencer spares kit	A50597801
	XDS filter 5 micron element kit	A50597802
	XDS filter 1 micron element kit	A50597803
Cord sets	UK, three pin plug	A50505003
	North European plug	A50506003
	North America/Japan plug	A50507003
	No plug	A50508003

Dimensions

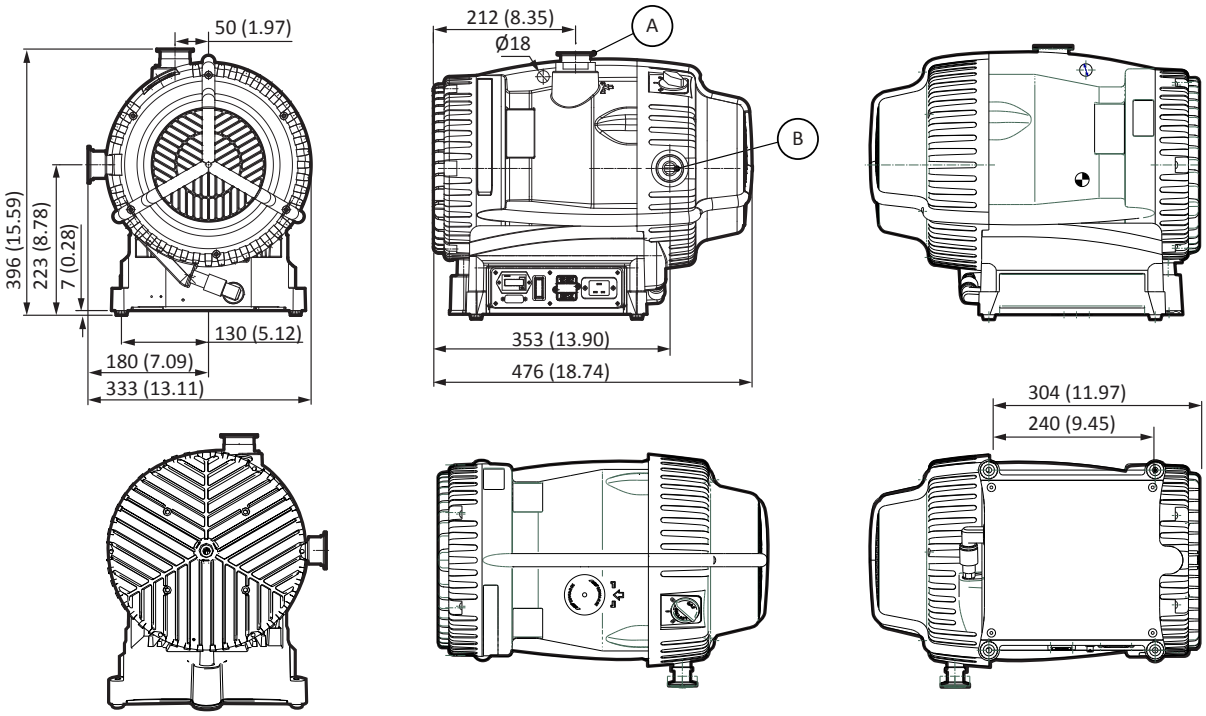

A. NW40
B. NW25

Performance

XDS35i

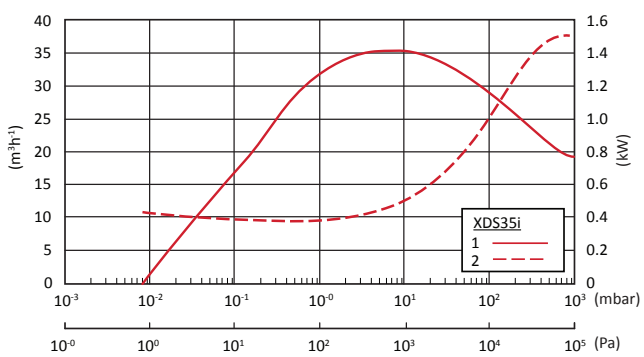

XDS46i

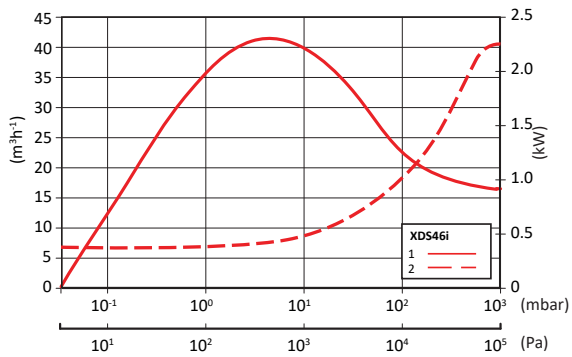

1. Speed
2. Power

Publication Number: 3601 0428 01

© Edwards Limited 2018. All rights reserved Edwards and the Edwards logo are trademarks of Edwards Limited

Whilst we make every effort to ensure that we accurately describe our products and services, we give no guarantee as to the accuracy or completeness of any information provided in this datasheet.

Edwards Ltd, registered in England and Wales No. 6124750, registered office: Innovation Drive, Burgess Hill, West Sussex, RH15 9TW, UK.

GLOBAL CONTACTS

EMEA

UK	+44 1444 253 000 (local rate) 08459 212223
Belgium	+32 2 300 0730
France	+33 1 4121 1256
Germany	0800 000 1456
Italy	+ 39 02 48 4471
Israel	+ 972 8 681 0633

ASIA PACIFIC

China	+86 400 111 9618
India	+91 20 4075 2222
Japan	+81 47 458 8836
Korea	+82 31 716 7070
Singapore	+65 6546 8408
Taiwan	+886 3758 1000

AMERICAS

USA	+1 800 848 9800
Brazil	+55 11 3952 5000