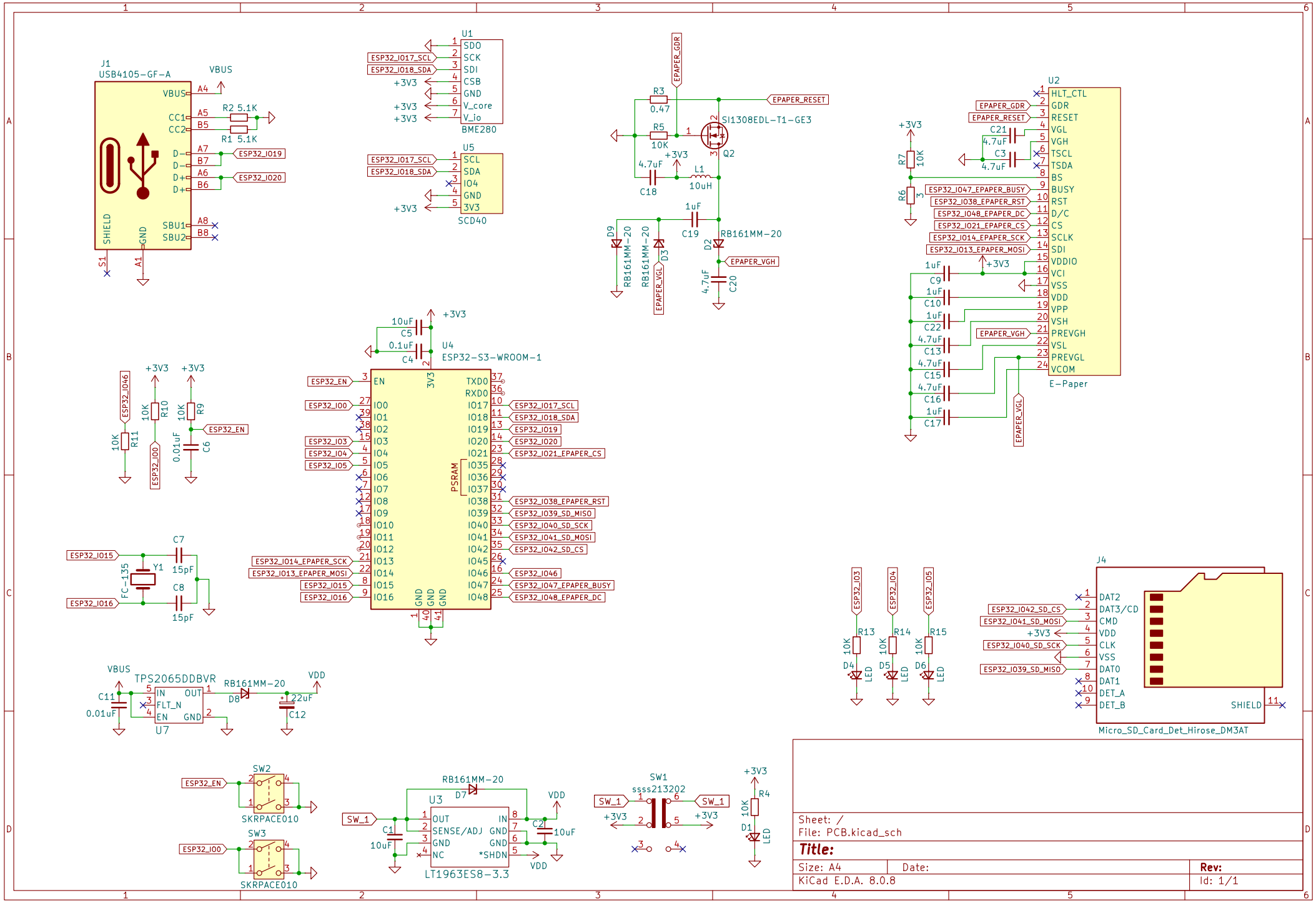
J1
USB4105-GF-A
VBUS
R2 5.1K
R1 5.1K
ESP32_IO19
ESP32_IO20
SHIELD
GND
U1
BME280
SDO
SCK
SDI
CSB
GND
V_core
V_io
ESP32_IO17_SCL
ESP32_IO18_SDA
+3V3
U5
SCD40
SCL
SDA
IO4
GND
3V3
EPAPER_GDR
EPAPER_RESET
R3 0.47
R5 10K
SI1308EDL-T1-GE3
Q2
4.7uF
C18
L1 10uH
1uF
C19
RB161MM-20
D9
D3
D2
EPAPER_VGL
EPAPER_VGH
4.7uF
C20
U2
E-Paper
HLT_CTL
GDR
RESET
VGL
VGH
TSCL
TSDA
BS
BUSY
RST
D/C
CS
SCLK
SDI
VDDIO
VCI
VSS
VDD
VPP
VSH
PREVGH
VSL
PREVGL
VCOM
ESP32_IO47_EPAPER_BUSY
ESP32_IO38_EPAPER_RST
ESP32_IO48_EPAPER_DC
ESP32_IO21_EPAPER_CS
ESP32_IO14_EPAPER_SCK
ESP32_IO13_EPAPER_MOSI
R7 10K
R6
C21 4.7uF
C3 4.7uF
C9 1uF
C10 1uF
C22 1uF
C13 4.7uF
C15 4.7uF
C16 4.7uF
C17 1uF
10uF
C5
0.1uF
C4
U4
ESP32-S3-WROOM-1
EN
3V3
IO0
IO1
IO2
IO3
IO4
IO5
IO6
IO7
IO8
IO9
IO10
IO11
IO12
IO13
IO14
IO15
IO16
TXD0
RXD0
IO17
IO18
IO19
IO20
IO21
IO35
IO36
IO37
IO38
IO39
IO40
IO41
IO42
IO45
IO46
IO47
IO48
PSRAM
ESP32_IO21_EPAPER_CS
ESP32_IO38_EPAPER_RST
ESP32_IO39_SD_MISO
ESP32_IO40_SD_SCK
ESP32_IO41_SD_MOSI
ESP32_IO42_SD_CS
ESP32_IO46
ESP32_IO47_EPAPER_BUSY
ESP32_IO48_EPAPER_DC
ESP32_IO14_EPAPER_SCK
ESP32_IO13_EPAPER_MOSI
ESP32_IO15
ESP32_IO16
ESP32_IO46
R11 10K
R10 10K
R9 10K
C6 0.01uF
C7 15pF
C8 15pF
Y1 FC-135
TPS2065DDBVR
U7
IN
FLT_N
EN
OUT
GND
C11 0.01uF
RB161MM-20
D8
22uF
C12
VDD
ESP32_IO3
ESP32_IO4
ESP32_IO5
R13 10K
R14 10K
R15 10K
D4 LED
D5 LED
D6 LED
J4
Micro_SD_Card_Det_Hirose_DM3AT
DAT2
DAT3/CD
CMD
VDD
CLK
VSS
DAT0
DAT1
DET_A
DET_B
SHIELD
ESP32_IO42_SD_CS
ESP32_IO41_SD_MOSI
ESP32_IO40_SD_SCK
ESP32_IO39_SD_MISO
SW2
SKRPACE010
SW3
SKRPACE010
ESP32_EN
ESP32_IO0
RB161MM-20
D7
U3
LT1963ES8-3.3
OUT
SENSE/ADJ
GND
NC
IN
GND
GND
*SHDN
SW_1
C1 10uF
C2 10uF
SW1
ssss213202
R4 10K
D1 LED
Sheet: /
File: PCB.kicad_sch
Title:
Size: A4
Date:
Rev:
KiCad E.D.A. 8.0.8
Id: 1/1