Delta Square V1 assembly manual

Al profile 2020

there are some standard profile with 2020 width. you should use the profile with 6.2mm groove(picture) not v-slot. because you are using sliding rollers(picture) later which are moving slide through this groove.

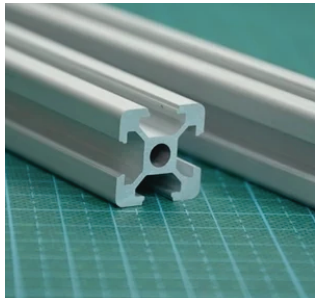

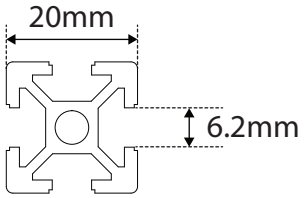

POM roller
(Dia. : 21.5mm, Hole : 5mm)

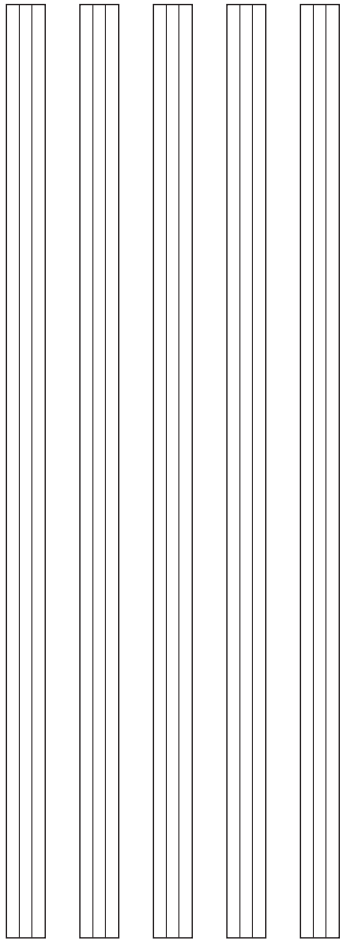

570mm

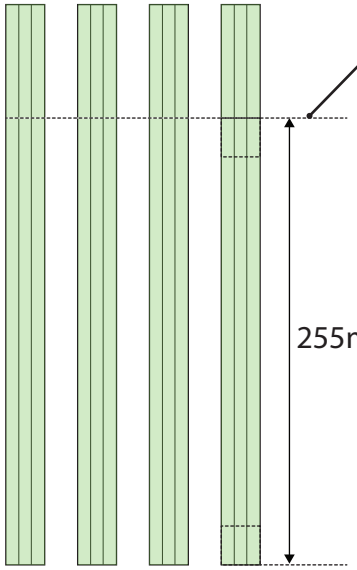

320mm

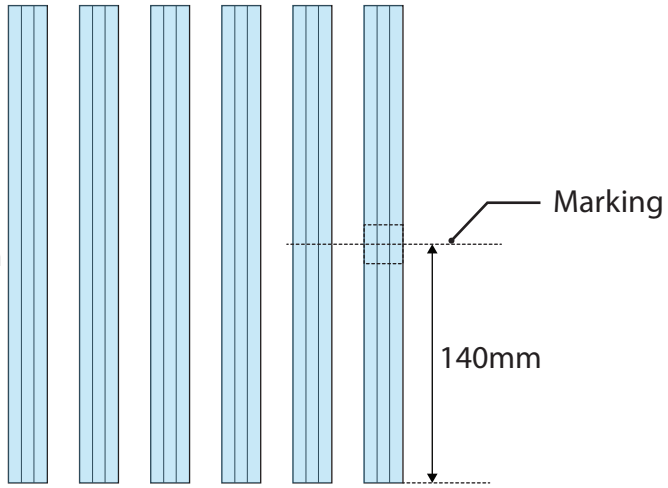

280mm

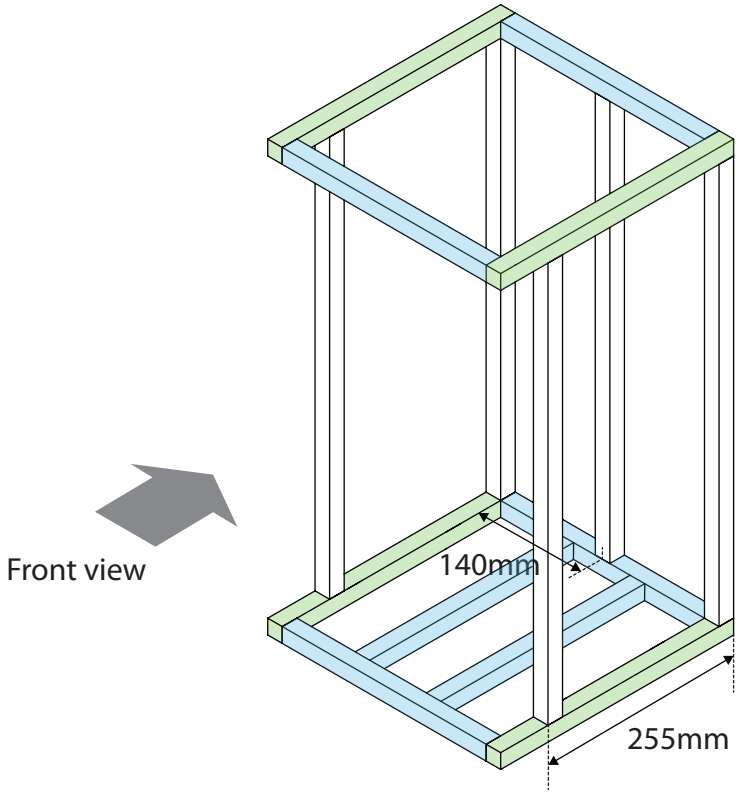

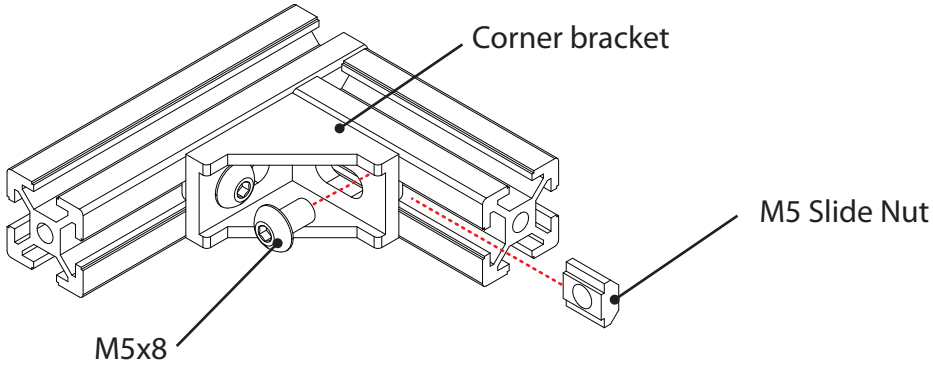

* To make body frame
All the corner bracket uses M5x8 bolt and M5 slide nut. Slide nut must be slide in the slot in advance to lock the frame with the bolt.

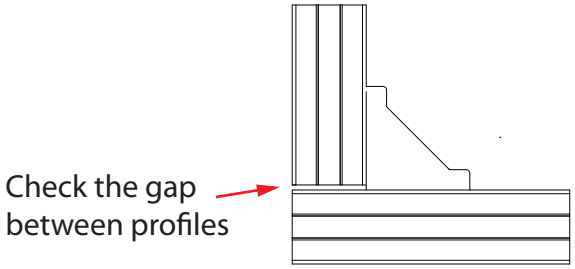

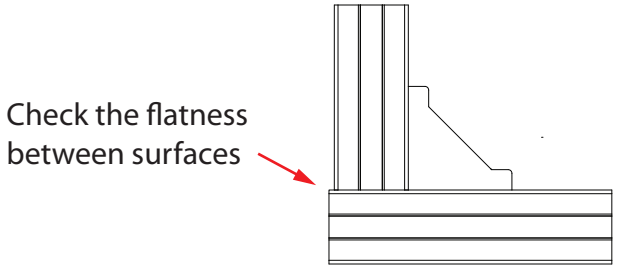

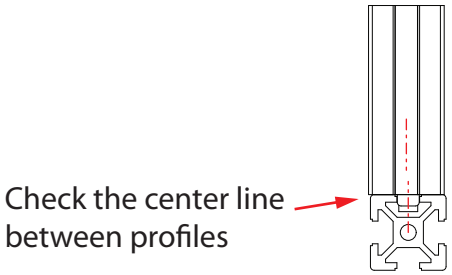

Recommendation

* Corner Bracket has a bump for the profile groove. you'd better working on a extra profile to make flatness or right angle of two profiles.

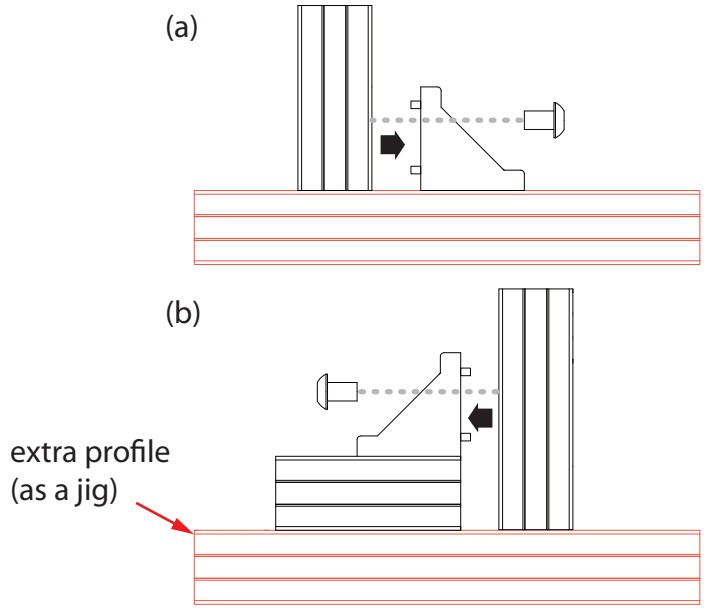

[1]

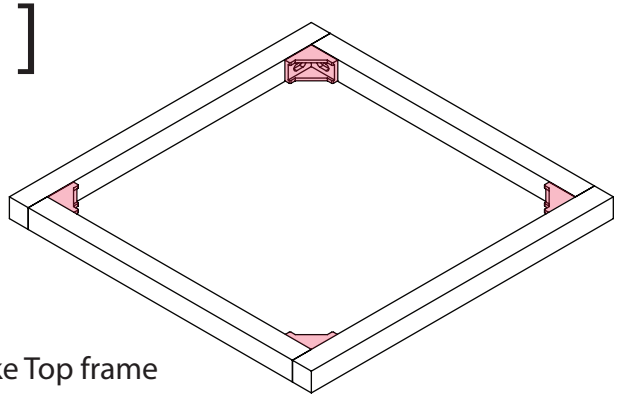

make Top frame
using #4 “Corner Bracket”

[2]

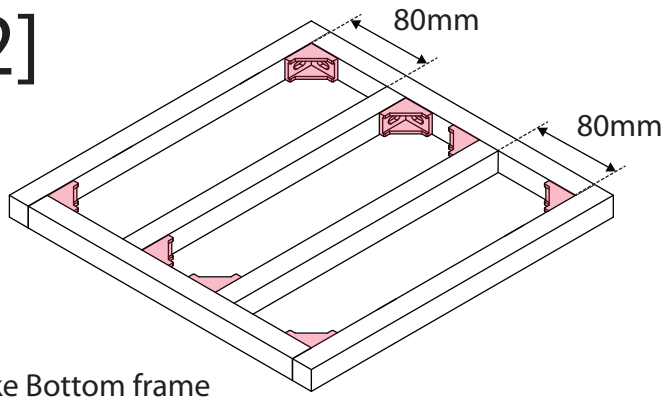

make Bottom frame
using #8 “Corner Bracket”

[3]

connect Colume frame
using #16 “Corner Bracket”
using #4 “Corner 3D Bracket”

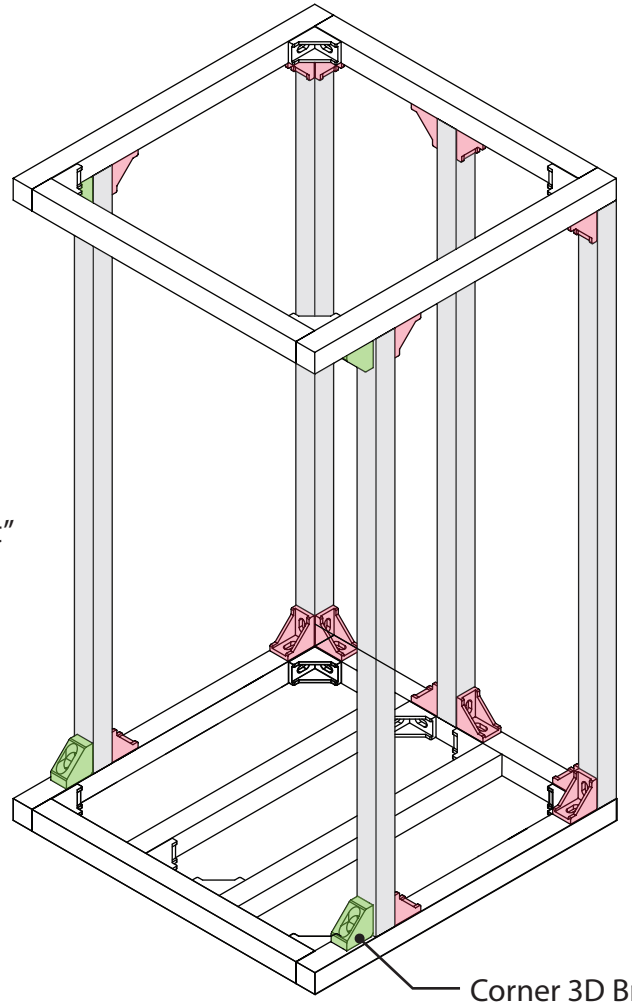

Corner 3D Bracket(4)
,Green color

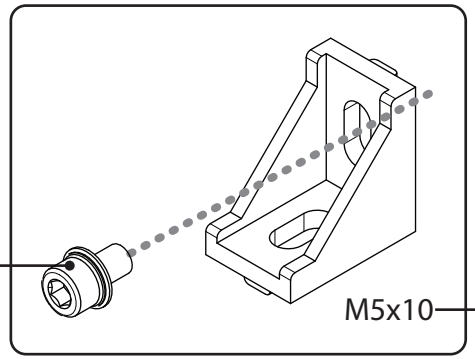

Corner Bracket

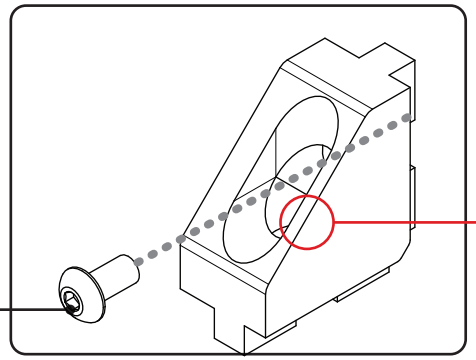

Corner 3D Bracket

[4] front L bracket

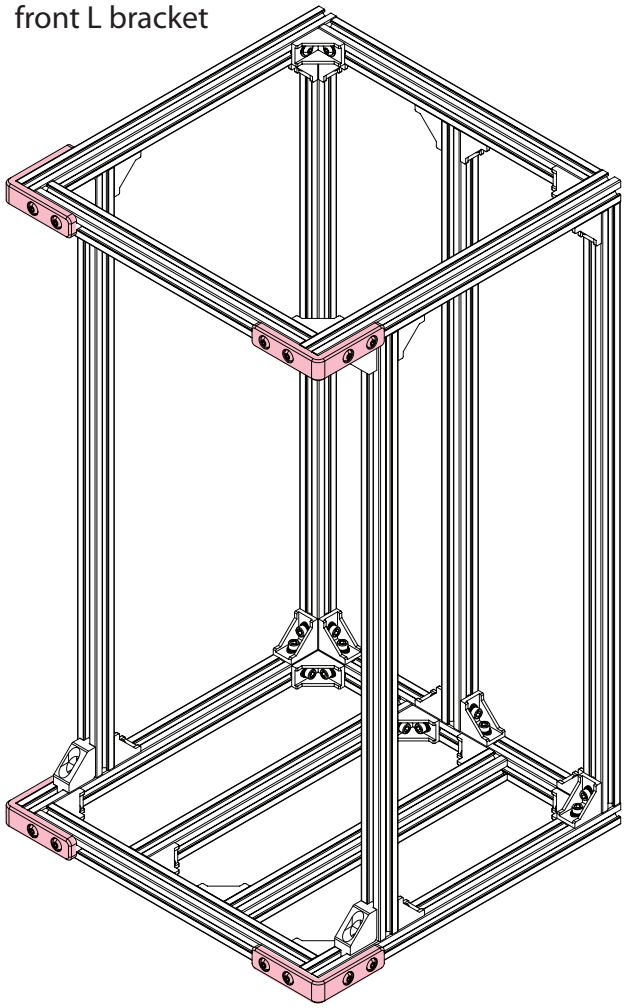

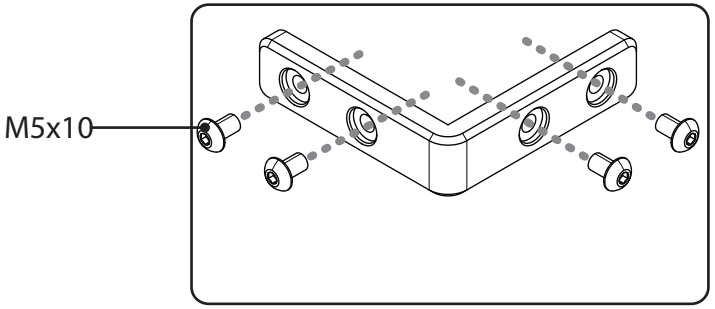

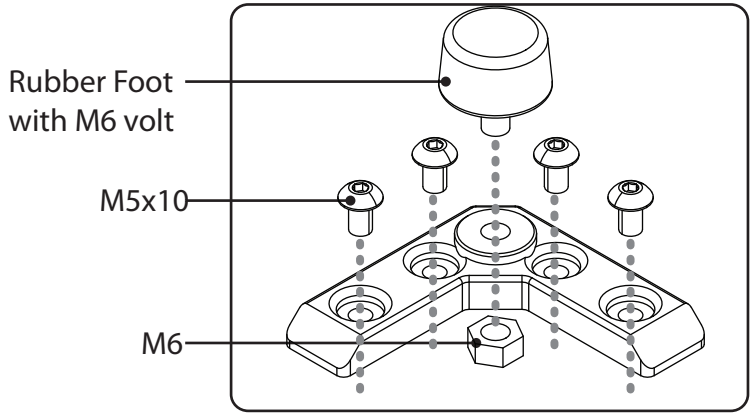

Foot & Foot base

[5] foot

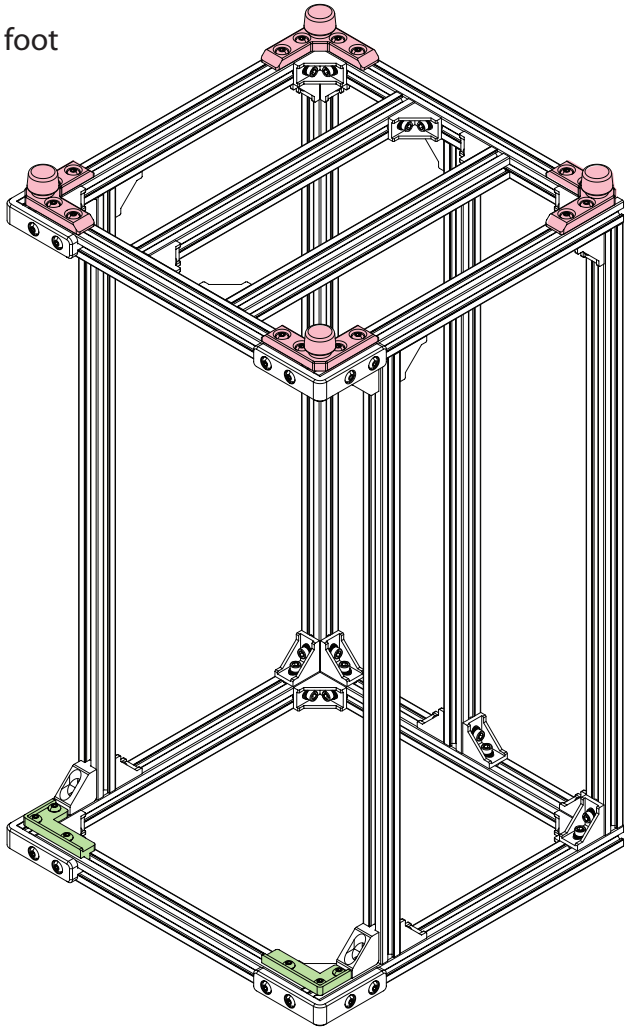

[6] top door guide

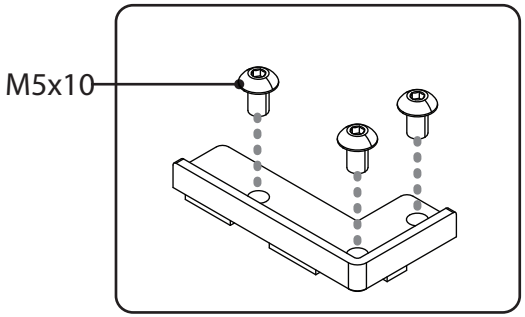

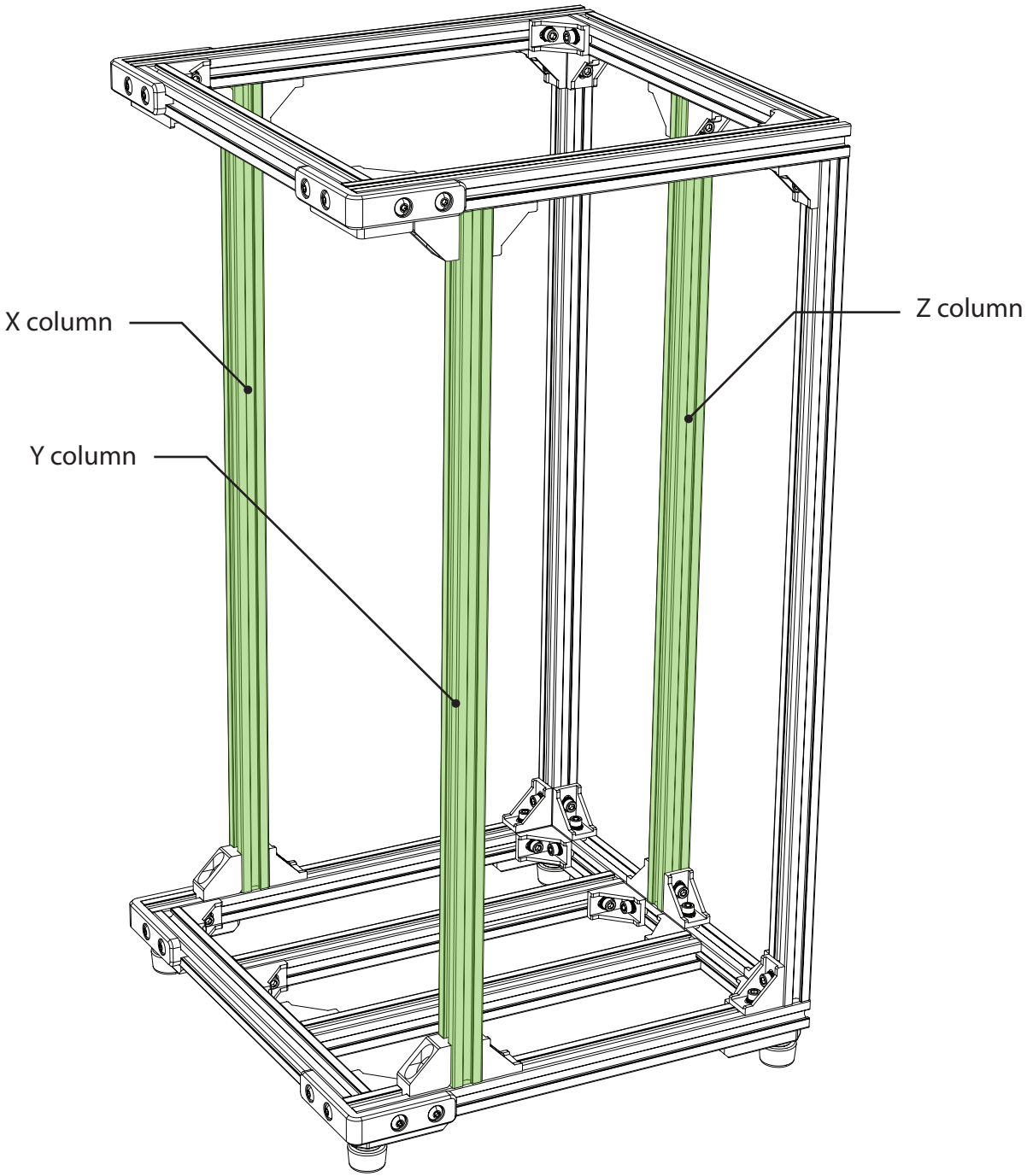

Frame assembly Done!

double check for dimension !! (length and position) of the frames and holes. and make square as possible as you can. this stage is important. it is like base structure of a building. if length and position is not correct or accurate, even if the following process is accurate, output of 3D printing models would not be exact dimension.

Functional Column (green color)
as a Delta printer sliding rail

X motor assembly

- NEMA 17 38~40mm stepMotor
- Hinge lever microswitch (for endstop),
- Motor belt pully (20 teeth, GT2, for 5mm belt)

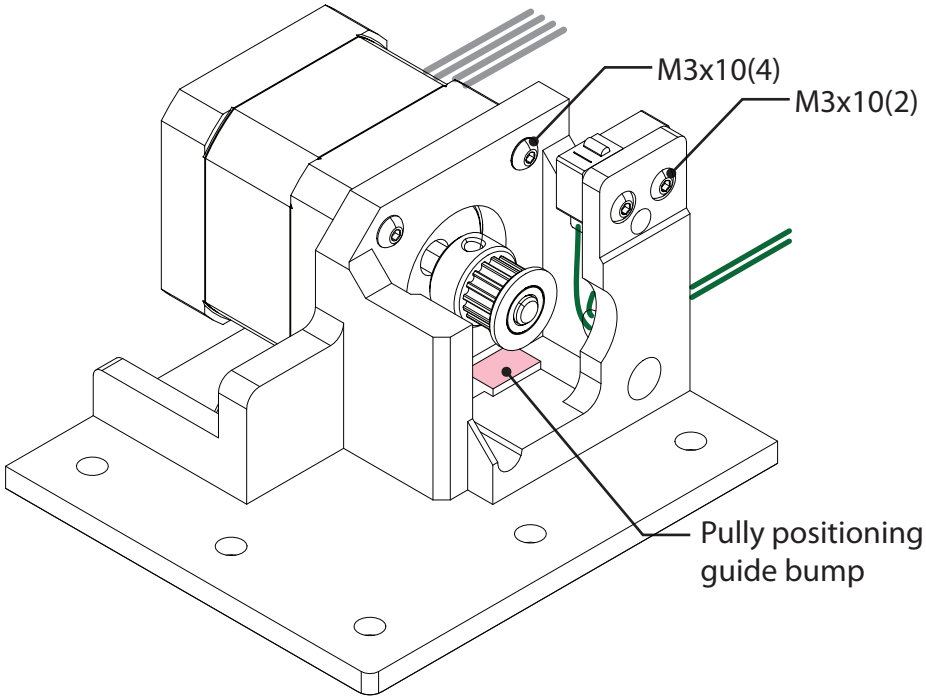

Y motor assembly
(mirrored shape for X motor assembly)

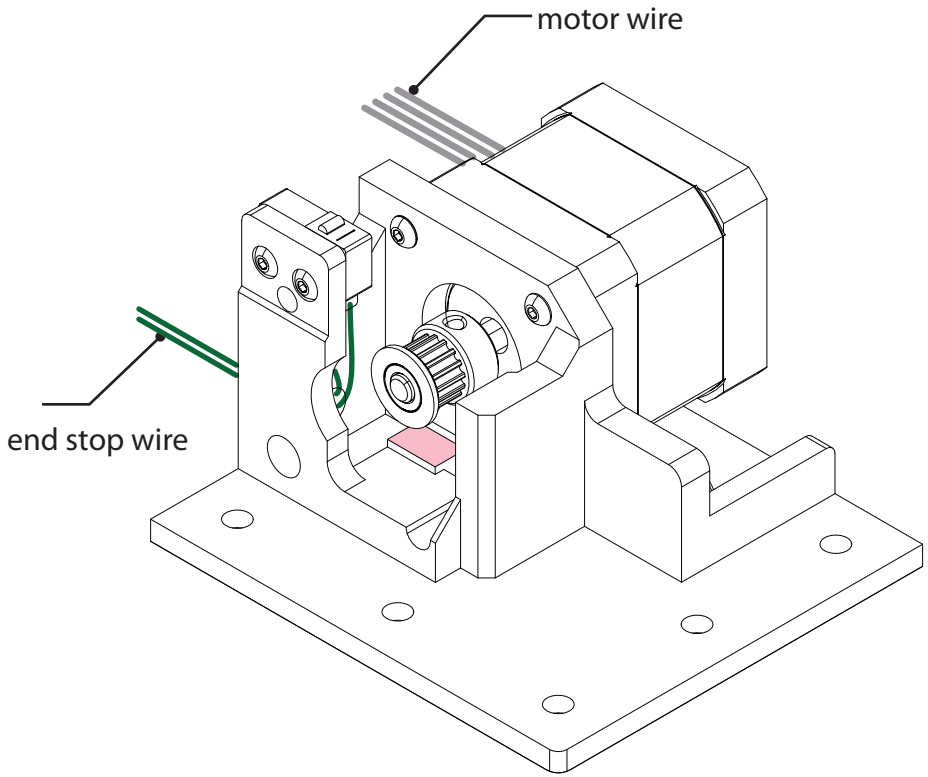

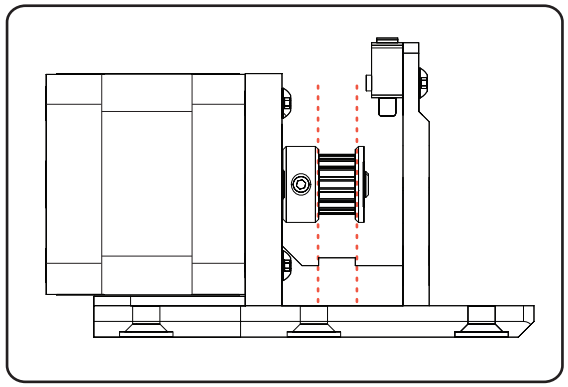

Pully positioning

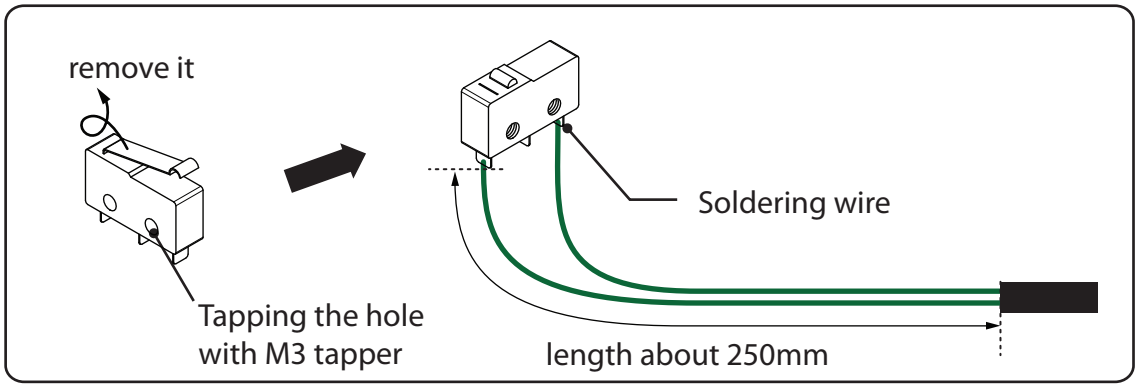

End stop switch preparation
(end stop wire is no polarity)

Z motor assembly

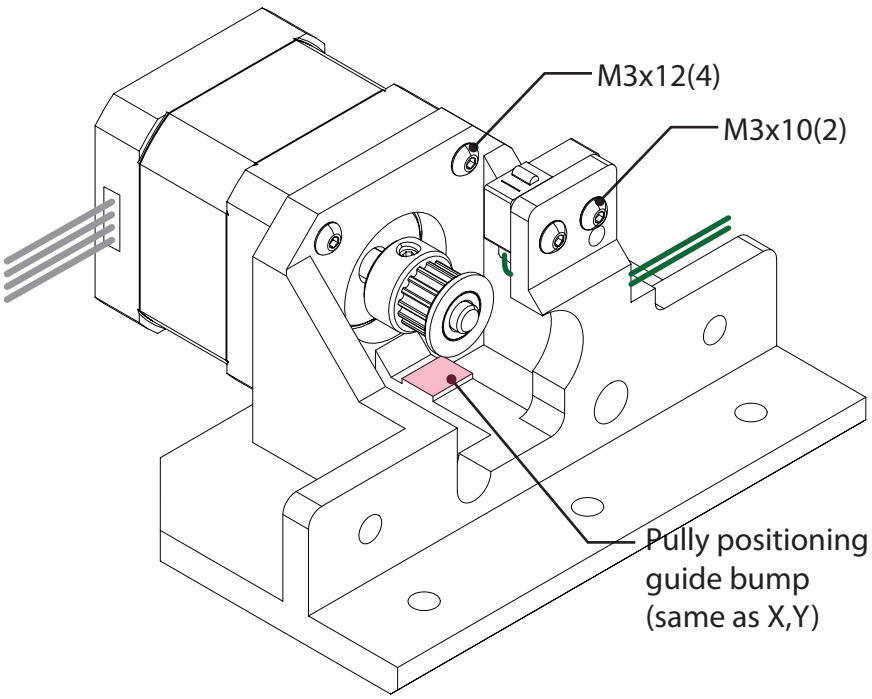

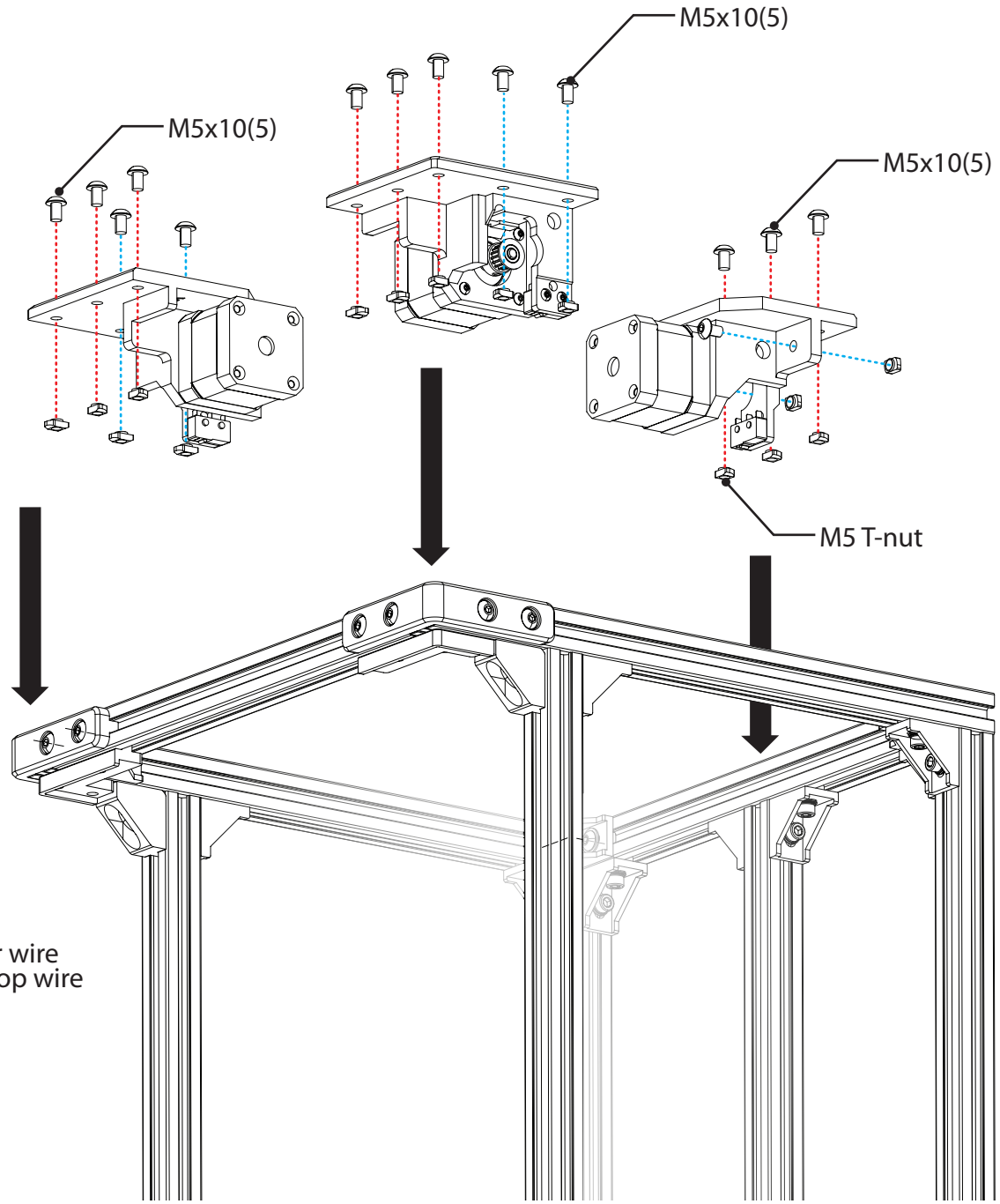

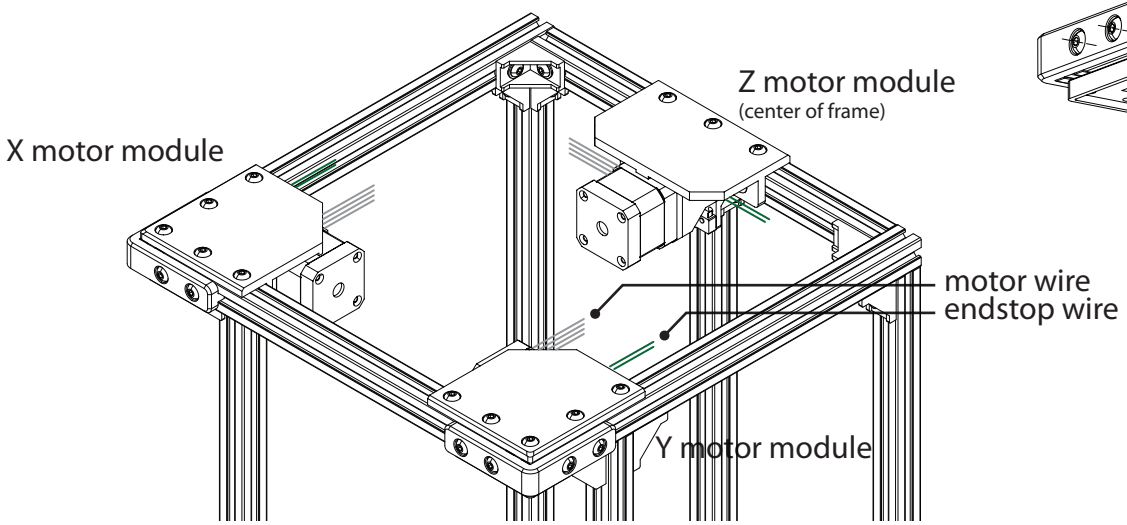

Final placement of motor assembly
(check the wire(motor, endstop) direction)

X slider assembly

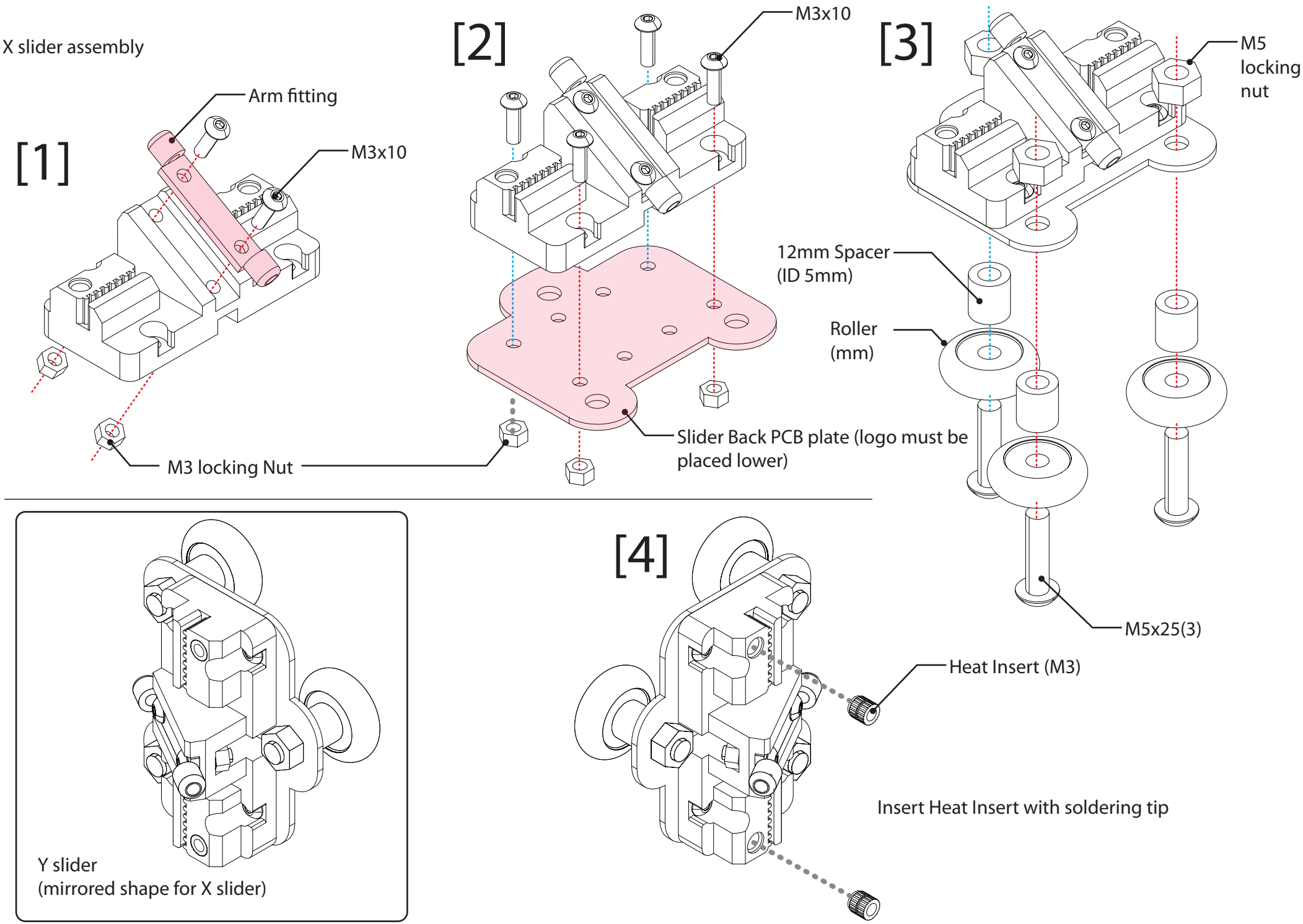

Z slider assembly

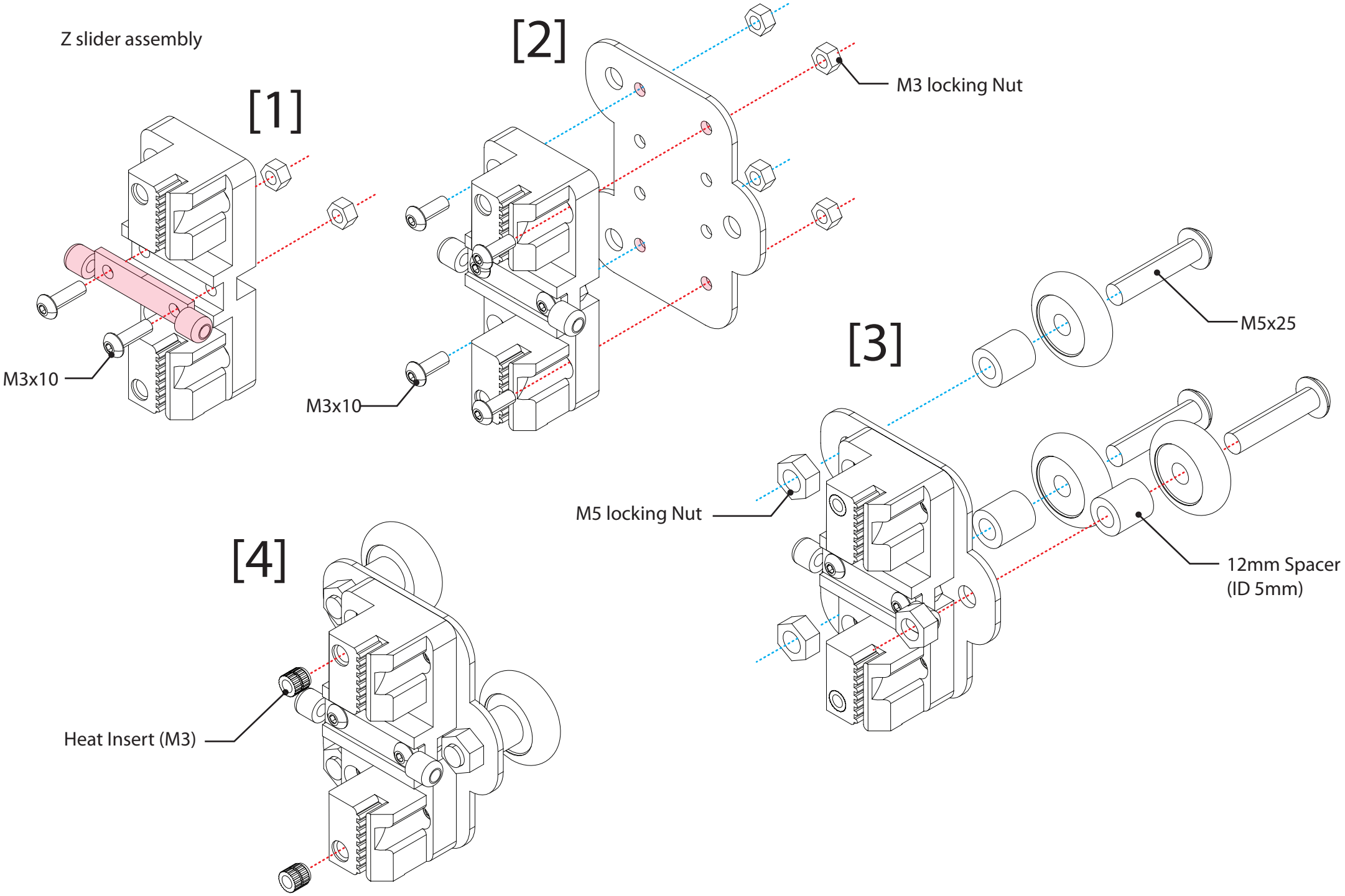

X,Y,Z slider assembled with Basic frame

[1] release one roller

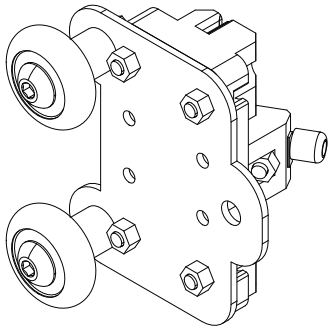

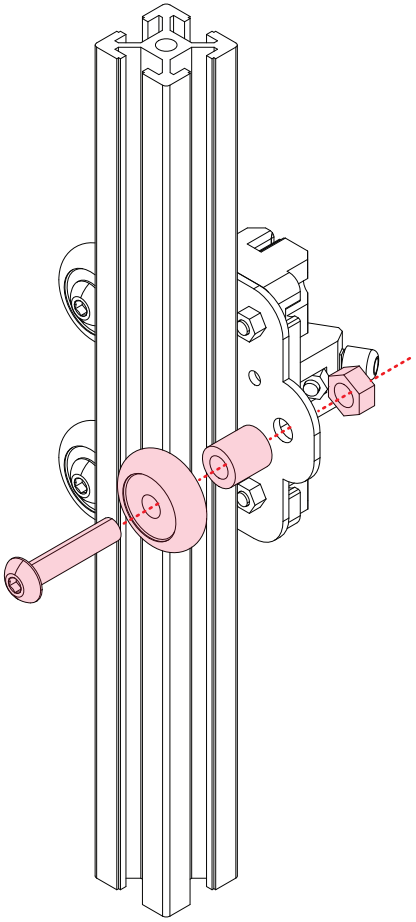

[2] tight it again along the rail

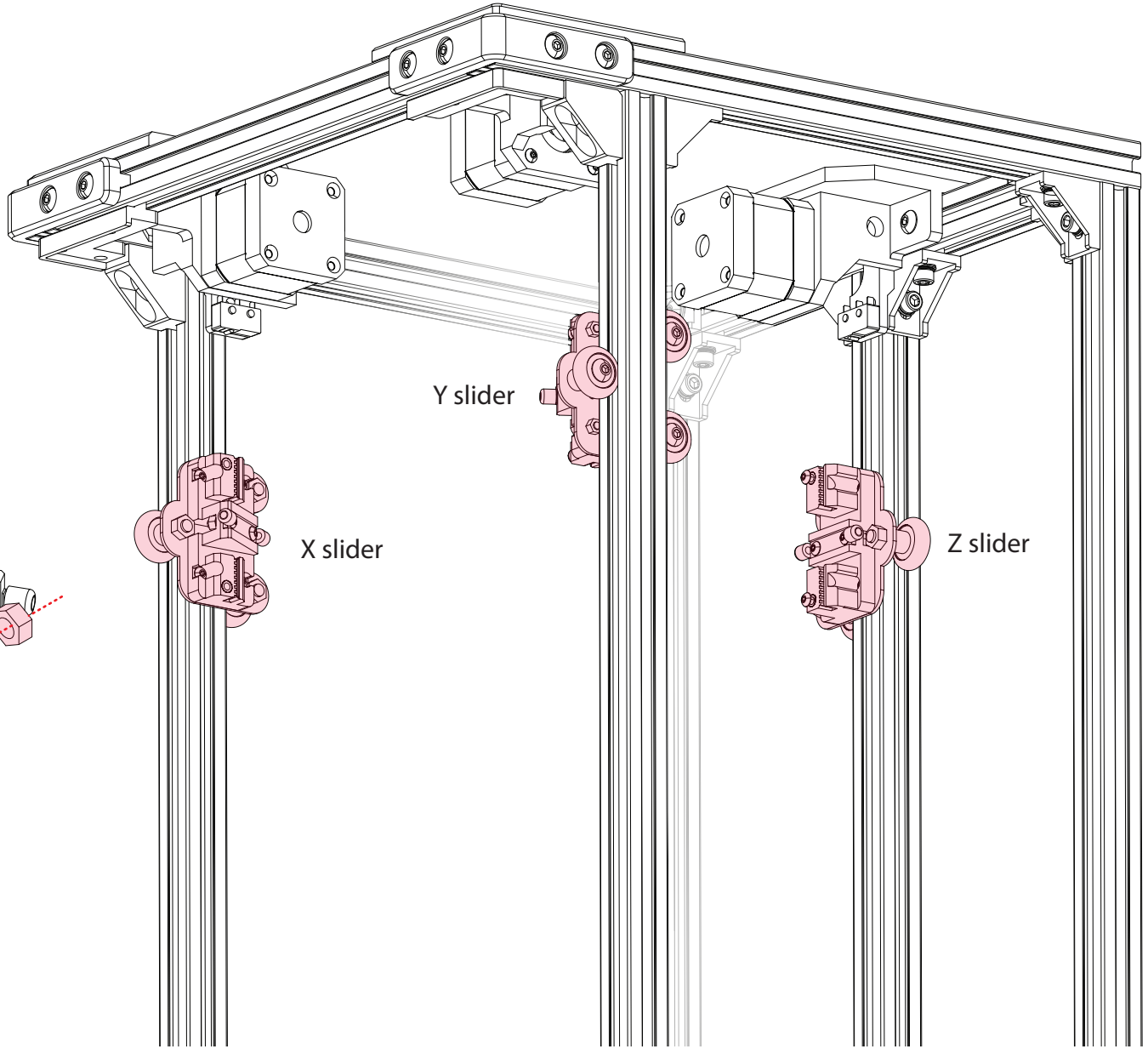

Motor Endpully assembly

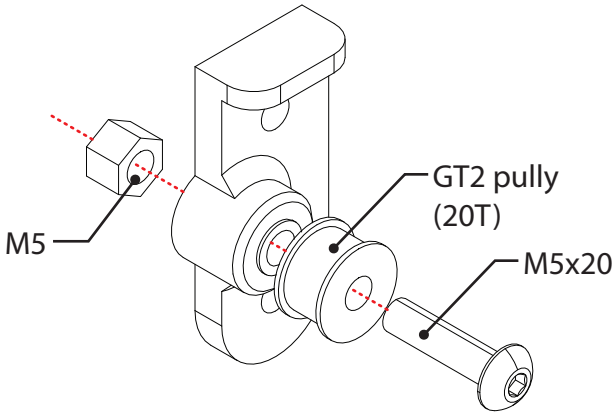

X motor Endpully

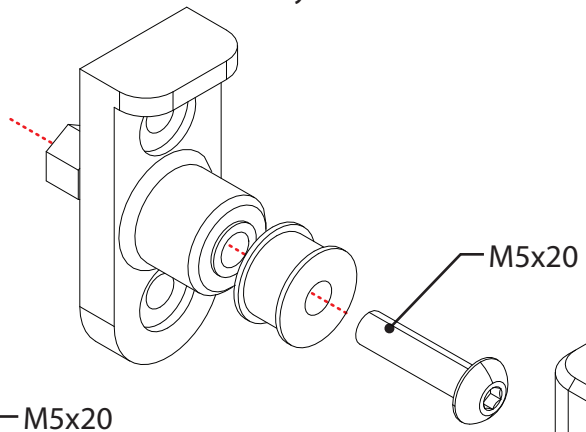

Z motor Endpully

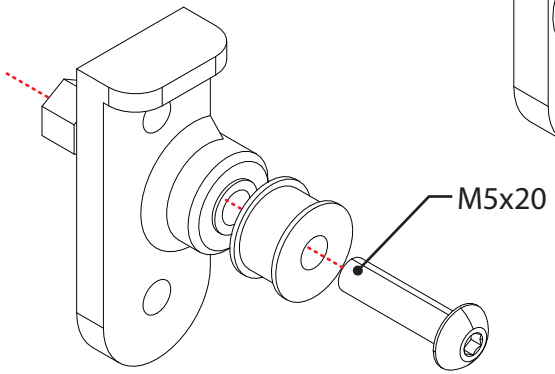

Y motor Endpully
(mirrored shape for X motor Endpully)

* At this stage, don't tight hard so the assembly can slide up and down freely and the location in frame is not important.

The others (Y motor Endpully, Z motor Endpully) has to be in positon of Y column and Z column each.

When you tight GT2 pully to 3D parts, Don't tighten too hard. check the pully to rotate freely.

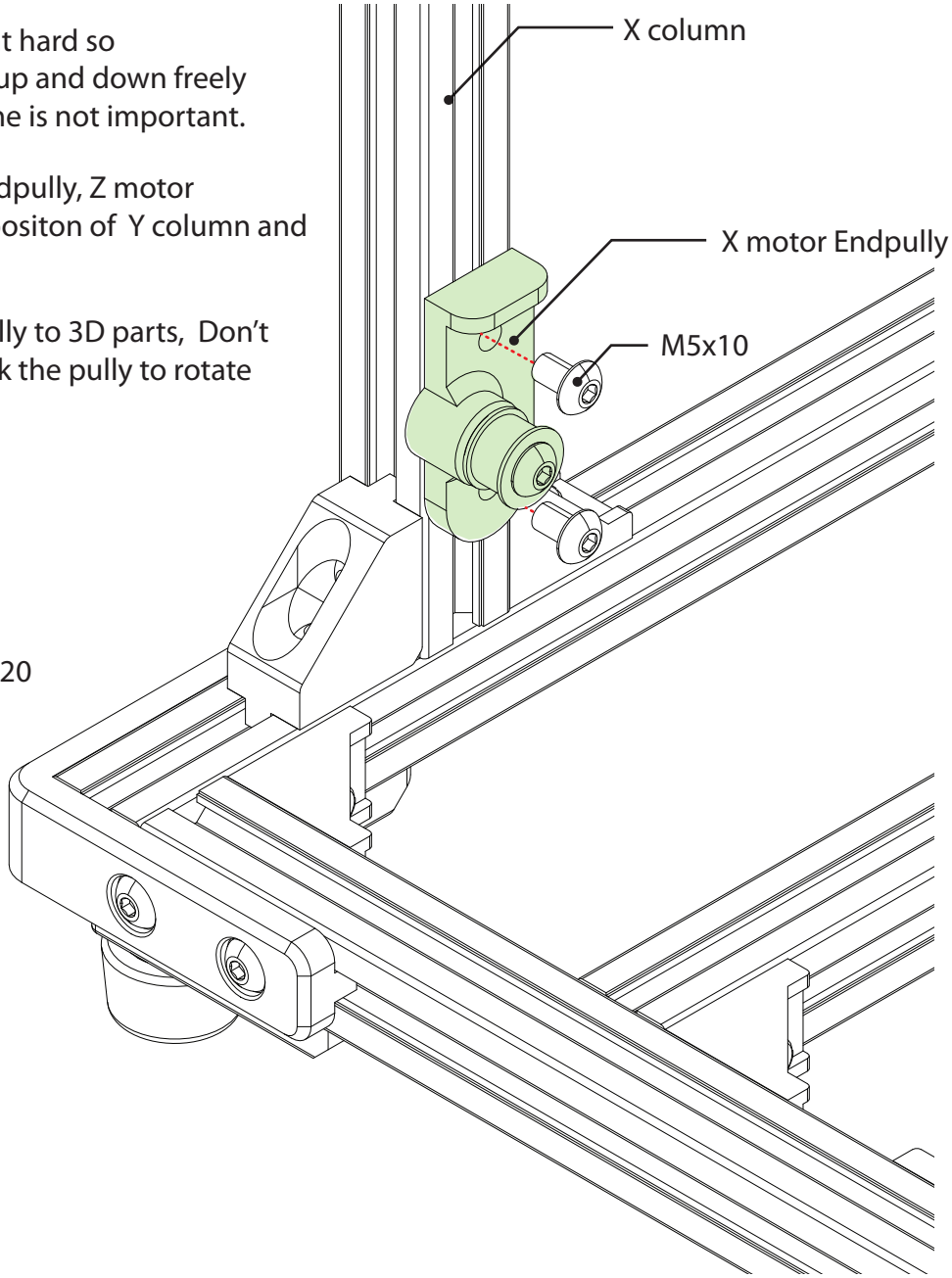

X,Y,Z slider GT2 timing belt assembly

[1]

Prepare 1030mm GT2(width 5mm) belt and place around motor pully and endpully. both end of it place securely to the slot of slider.

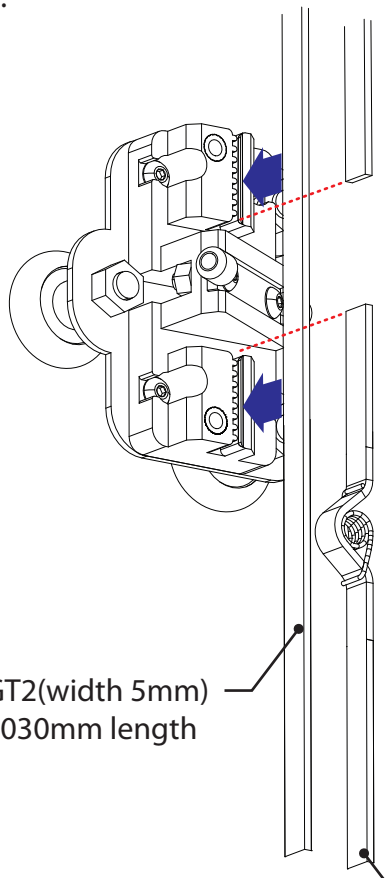

[2]

Belt tentioner has to place the position of about 10~20mm below the lower slot

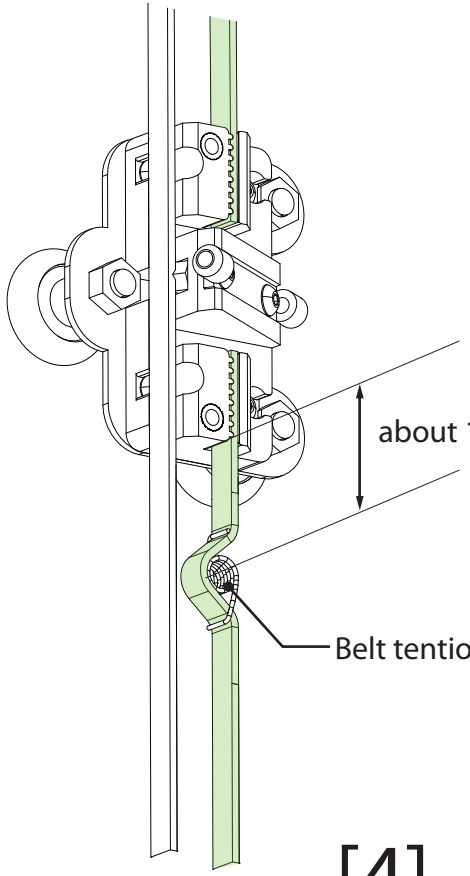

[3]

Loose the bolt of slider and push against the belt. then belt tentioner would be in fully tentioned. and lock the bolt of slider securely at the same time.

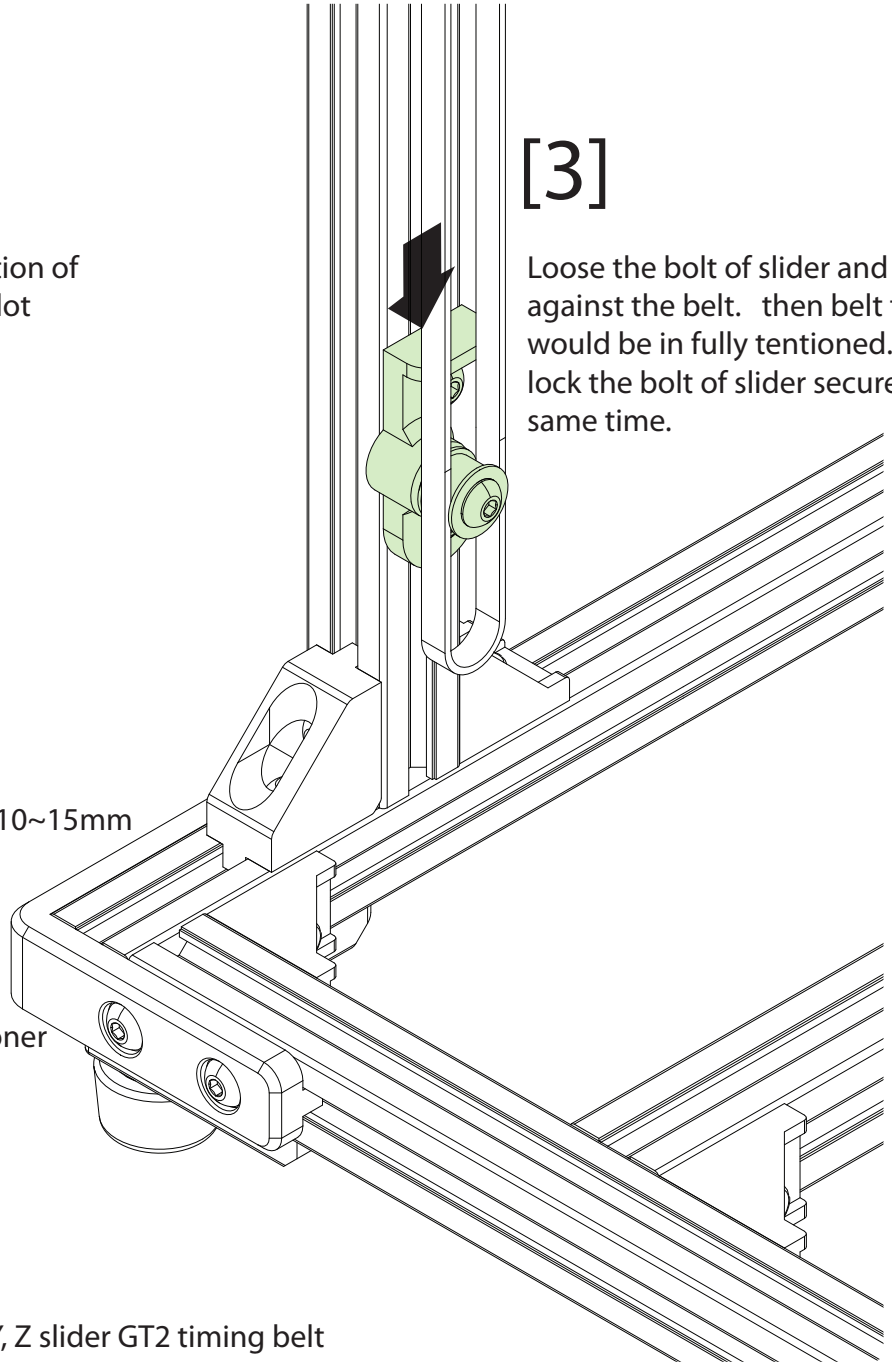

[4]

same as Y, Z slider GT2 timing belt

Main enclosure assembly

- Main enclosure consist of five 3d-printing parts. you can prefer to fit together with bolt and nut. not glue. then you can easily update parts later.

- Bottom plate is laser-cutted acrylic(3t). you can also attach it to main body with bolt and nuts.

- Controller Fan for cooling motor driver can be attached (Fan 12v, 50x50x10). be careful the Fan direction. air flow has to be inside from outside

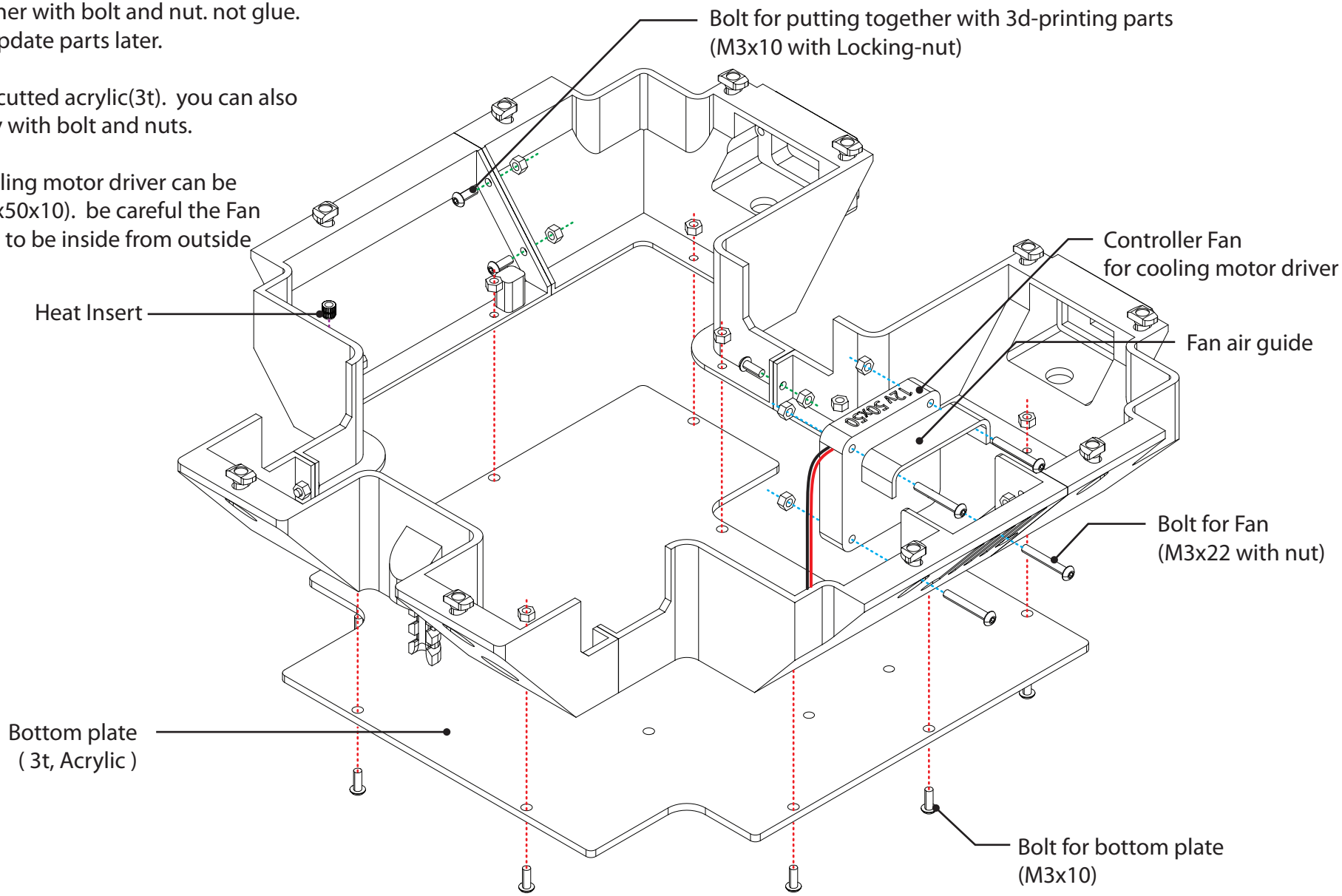

- Place the Main enclosure to Top Frame with M5x10 bolt and T-nut.

- Bracket for Arduino MEGA 2560 and Power supply can be placed on inside of Main enclosure with M3x10 bolt.

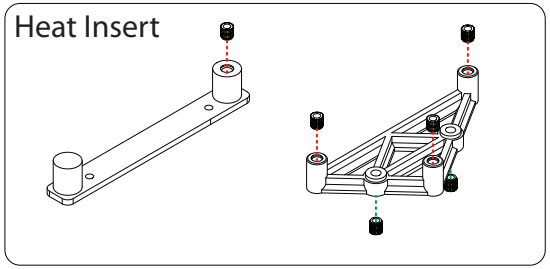

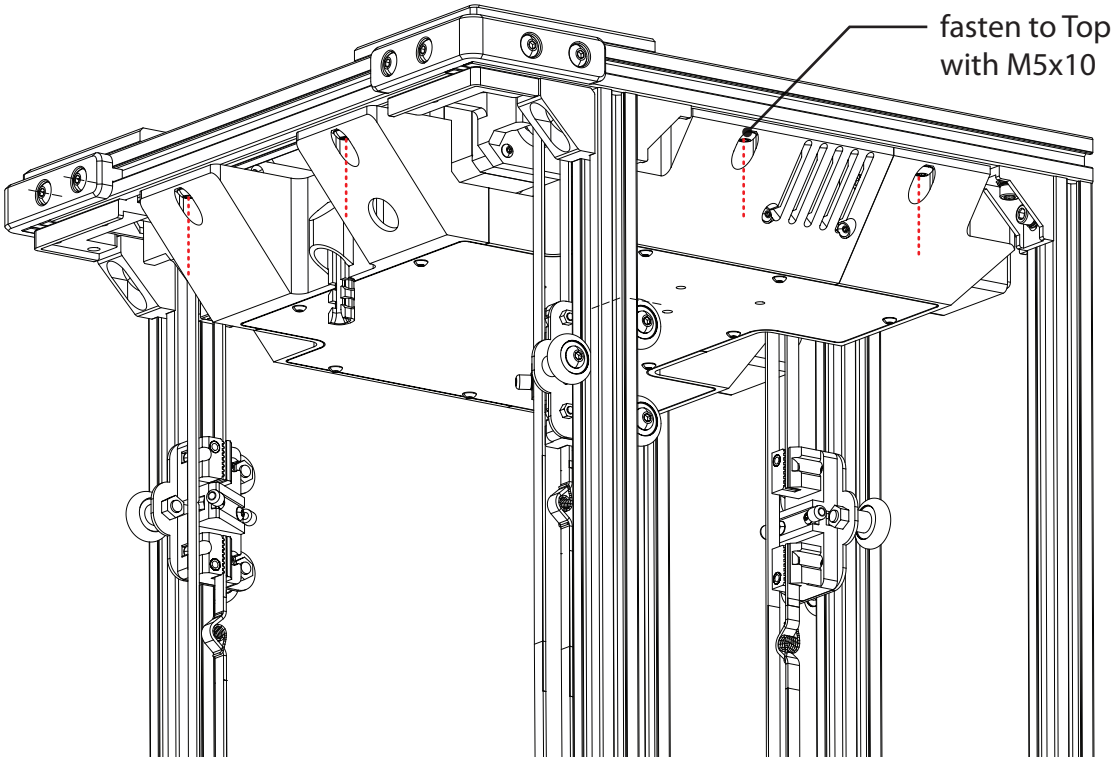

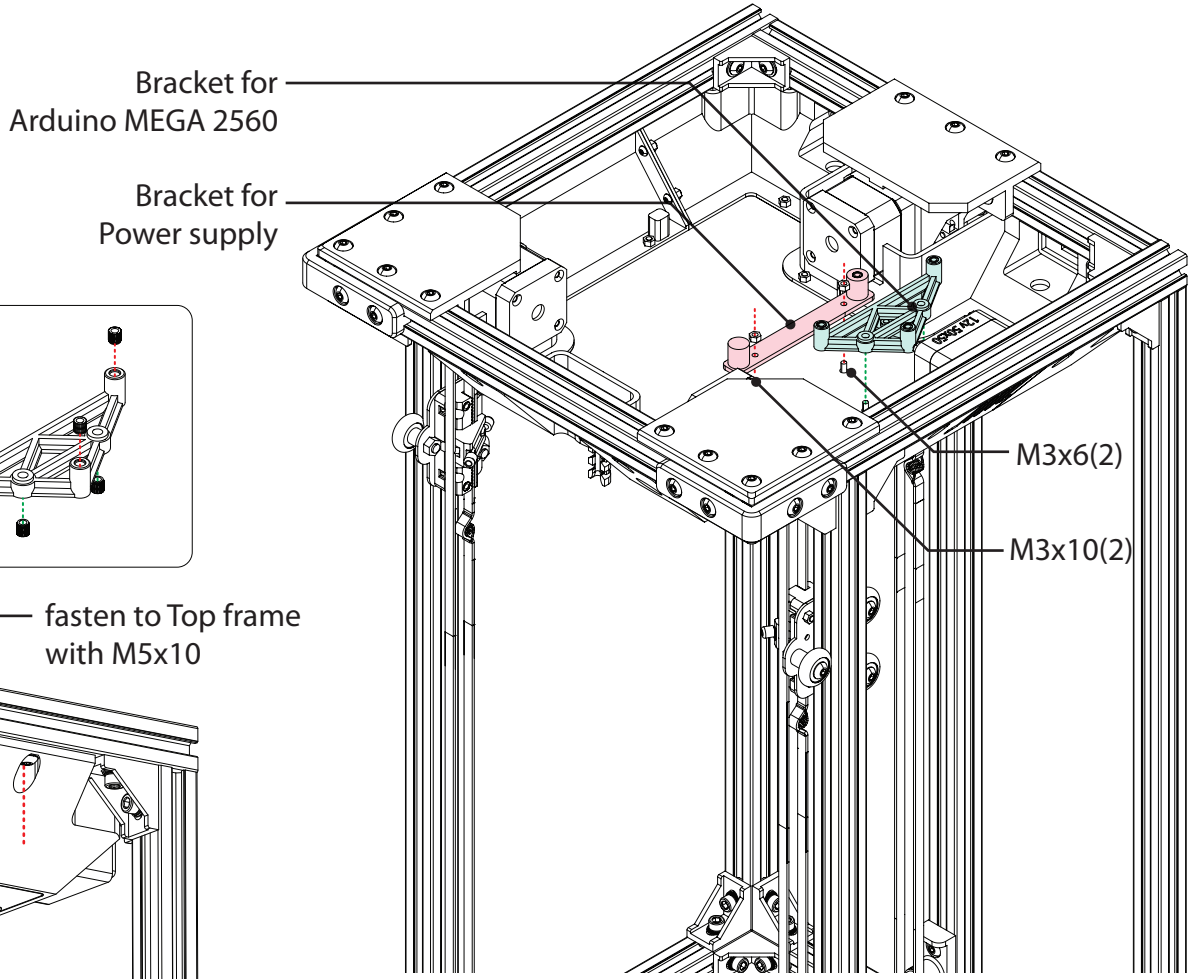

Main electronics assembly

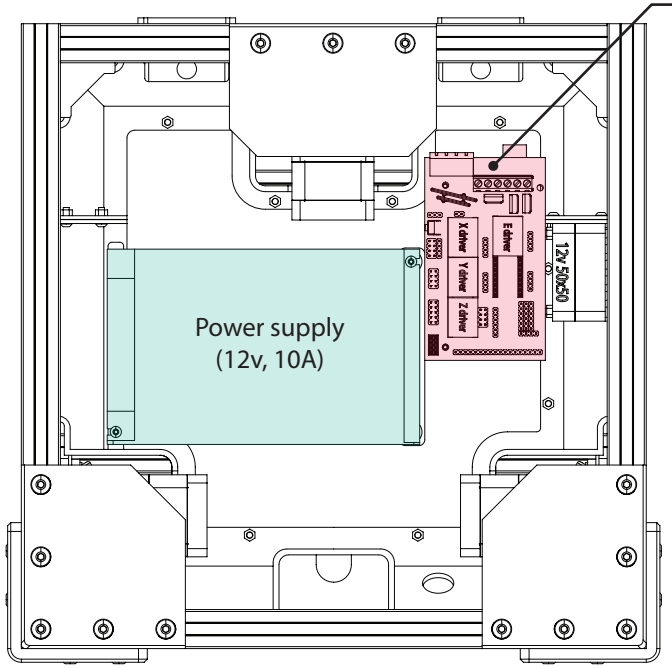

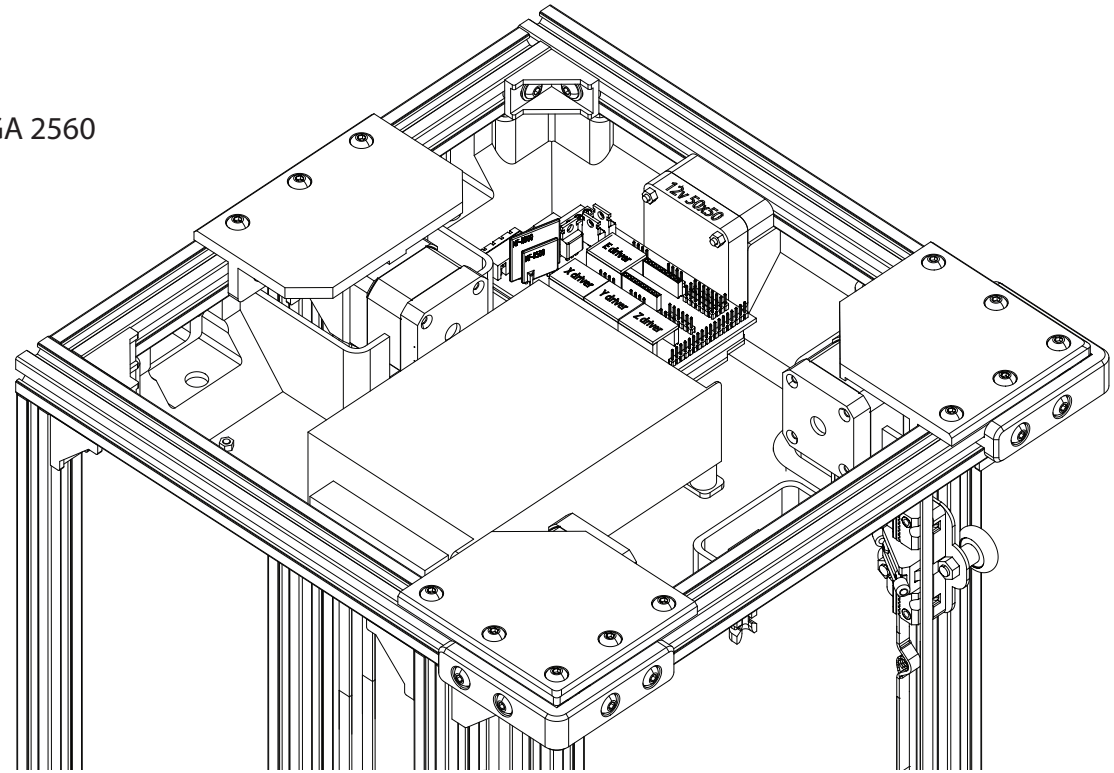

[1]

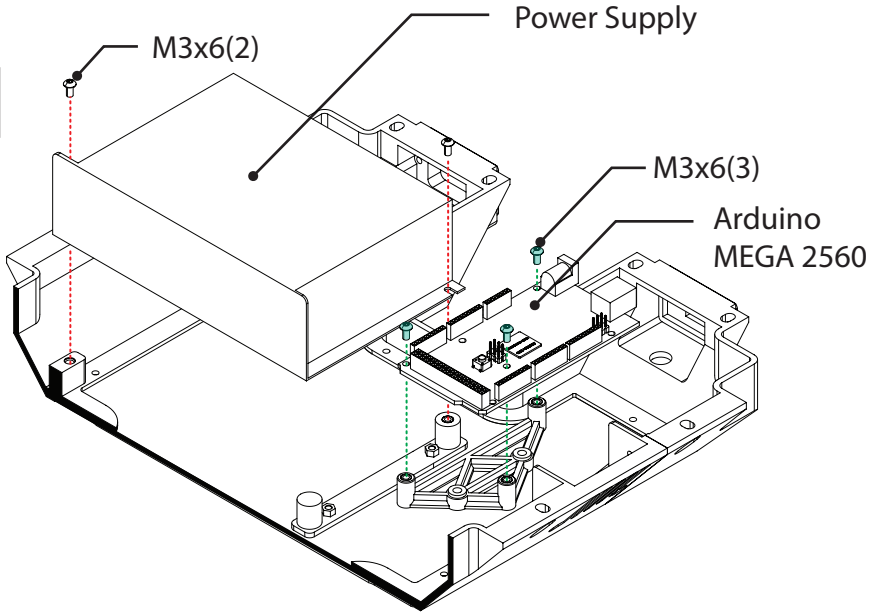

[2]

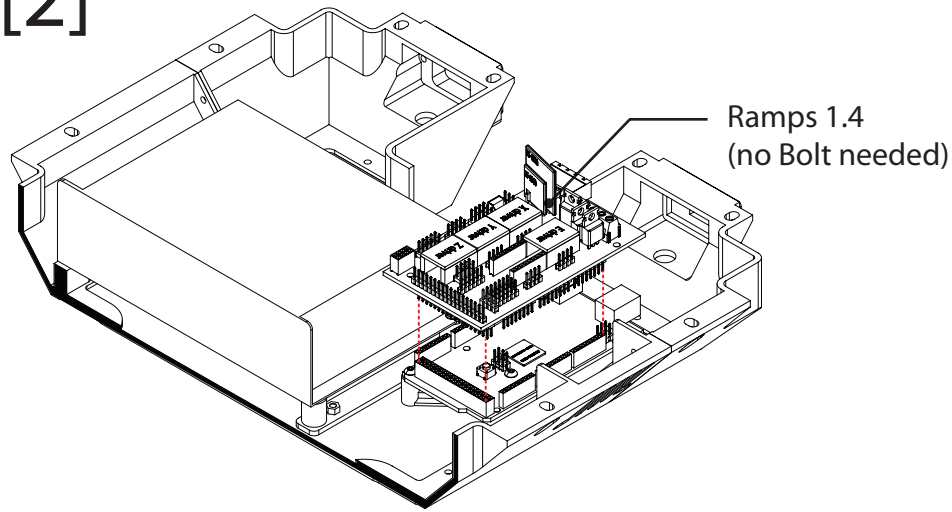

Extruder assembly

[1]

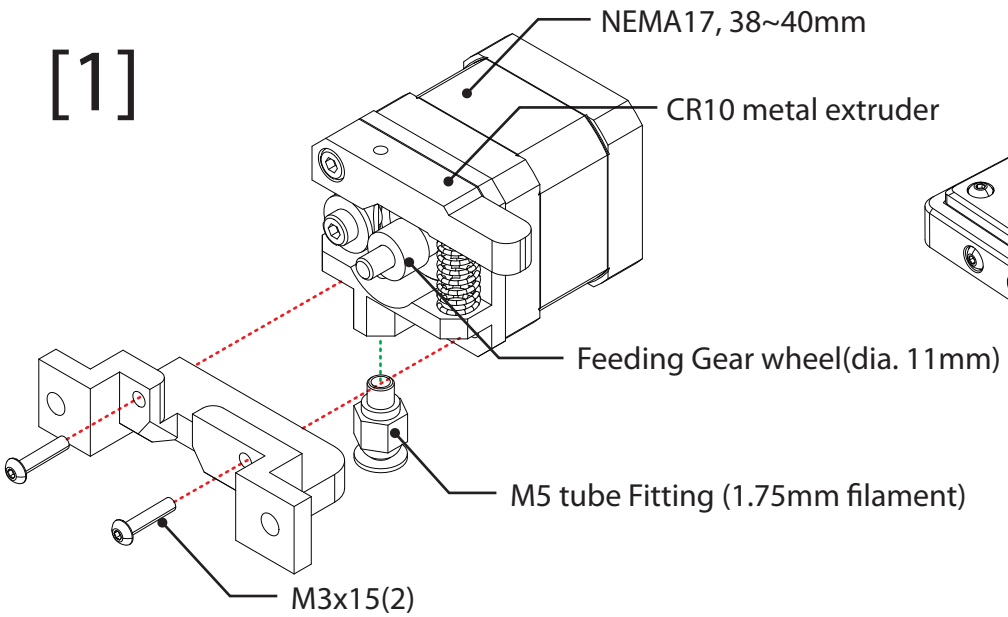

[2]

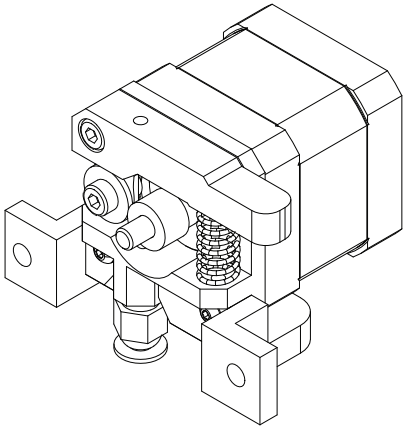

[3]

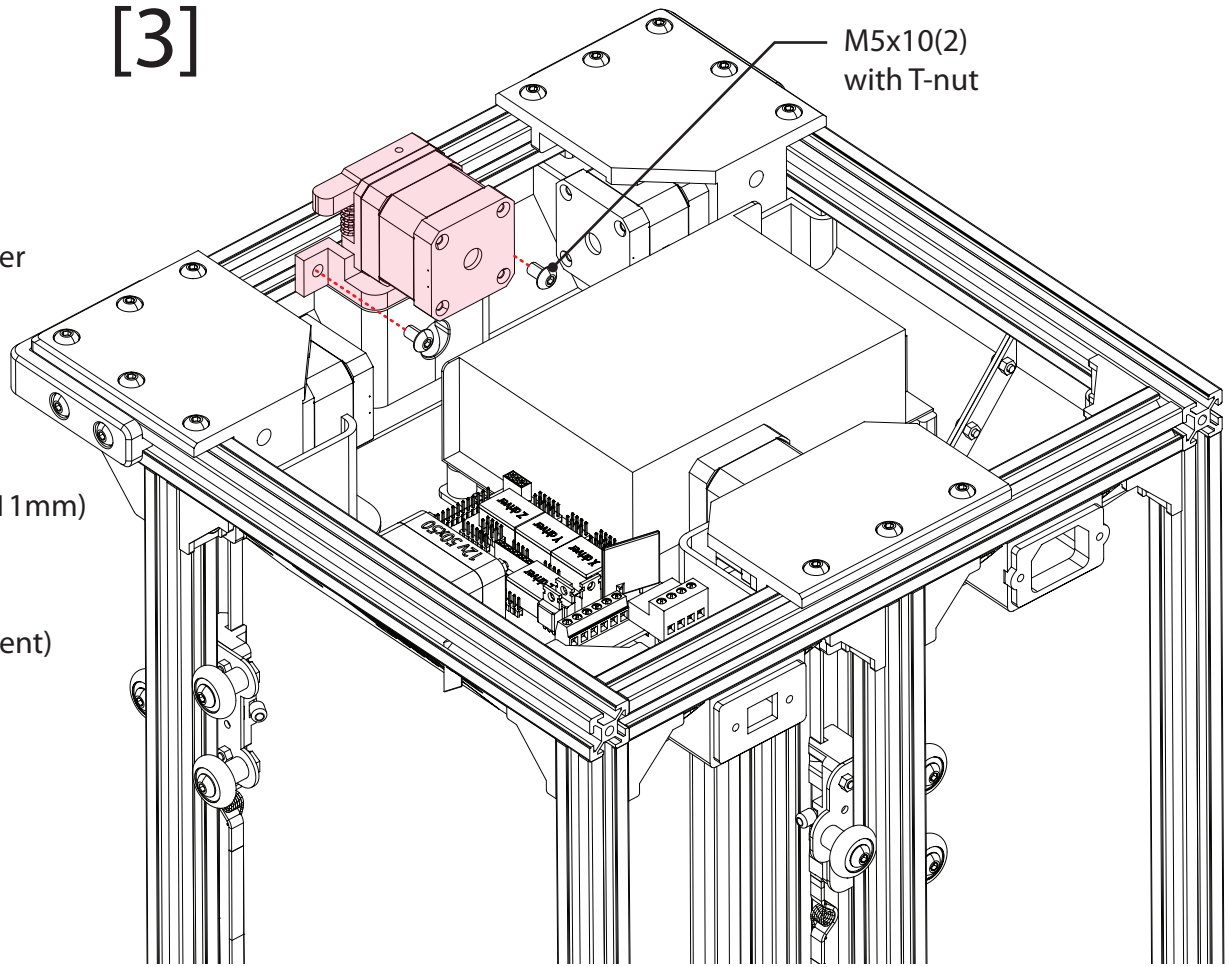

USB and Power Innet assembly

- Before install Power Socket, solding 3 wire (+, -, Nutral) to the socket.
  and the other end of wire connect to Power supply AC terminal.

- the wires for Power Socket has to be standard AWG for you safety.

- USB socket can be connected to Arduino MEGA 2560 USB port.

Elbow B Male To USB B Female Socket

Power Socket

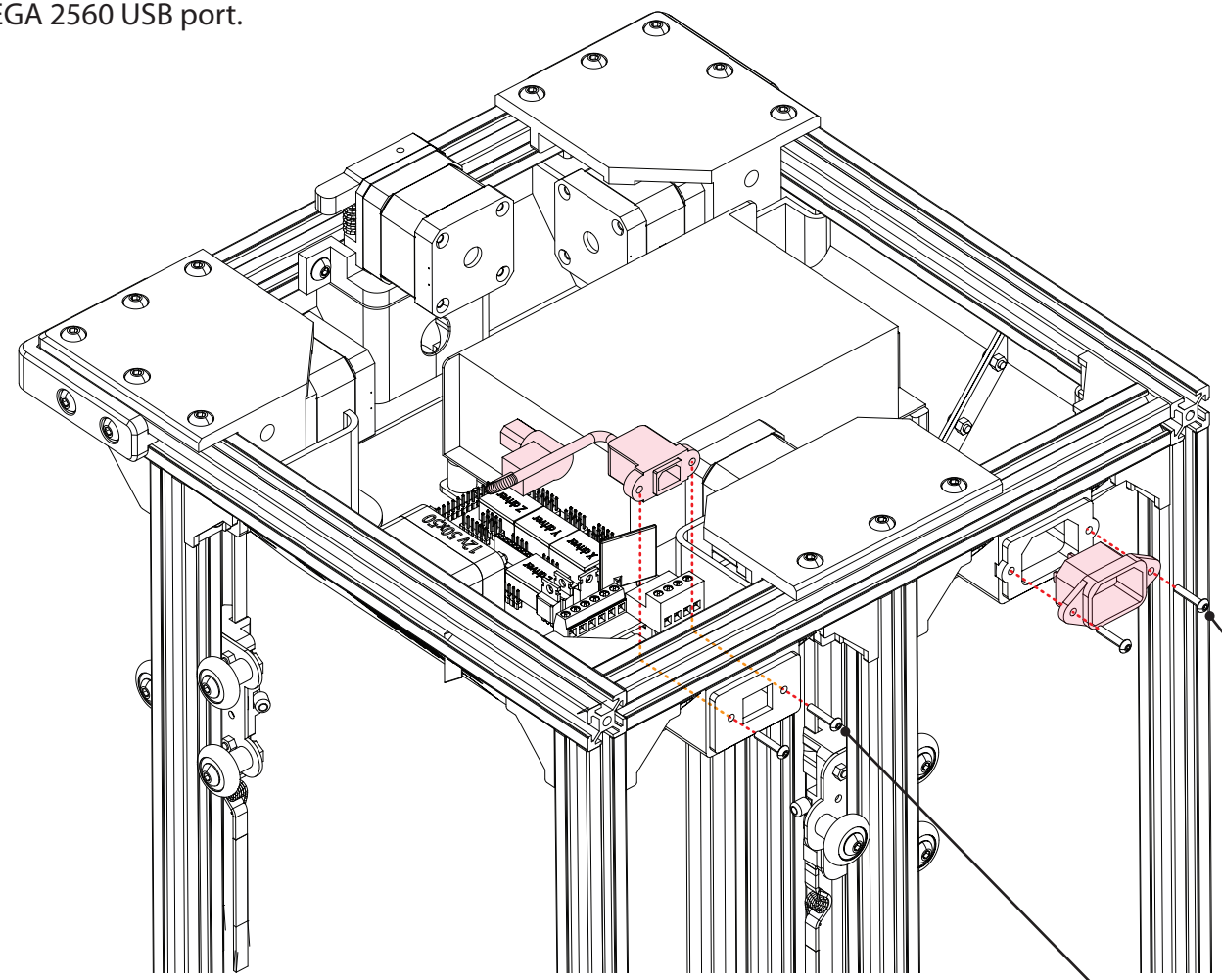

AC
Neutral
AC
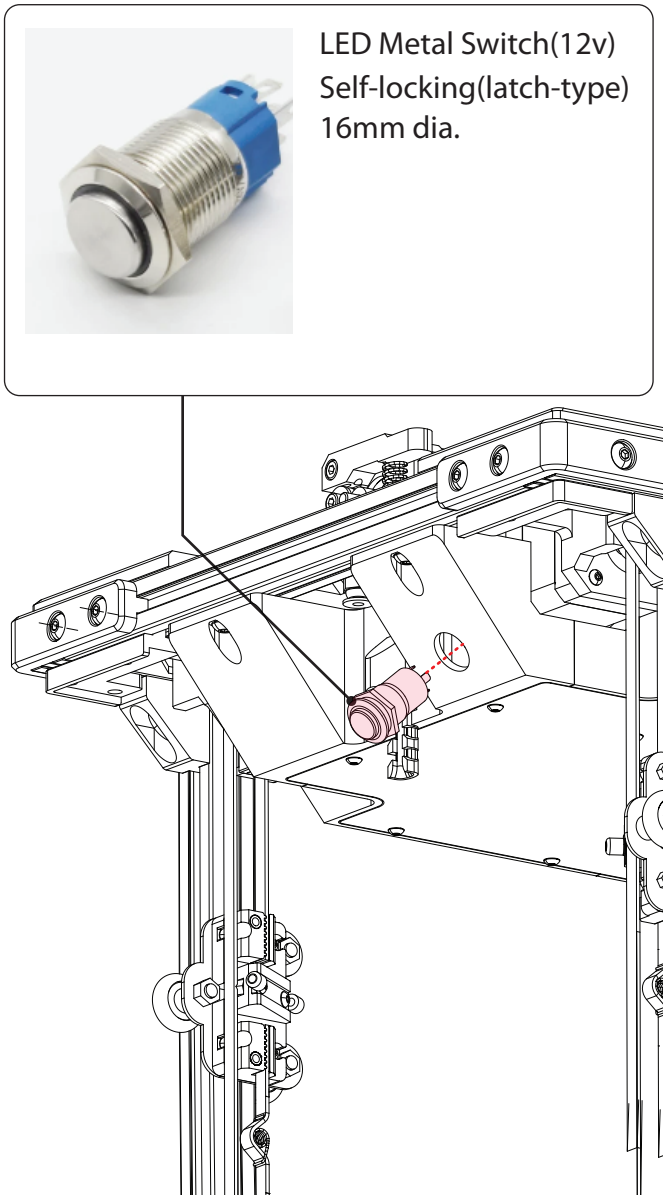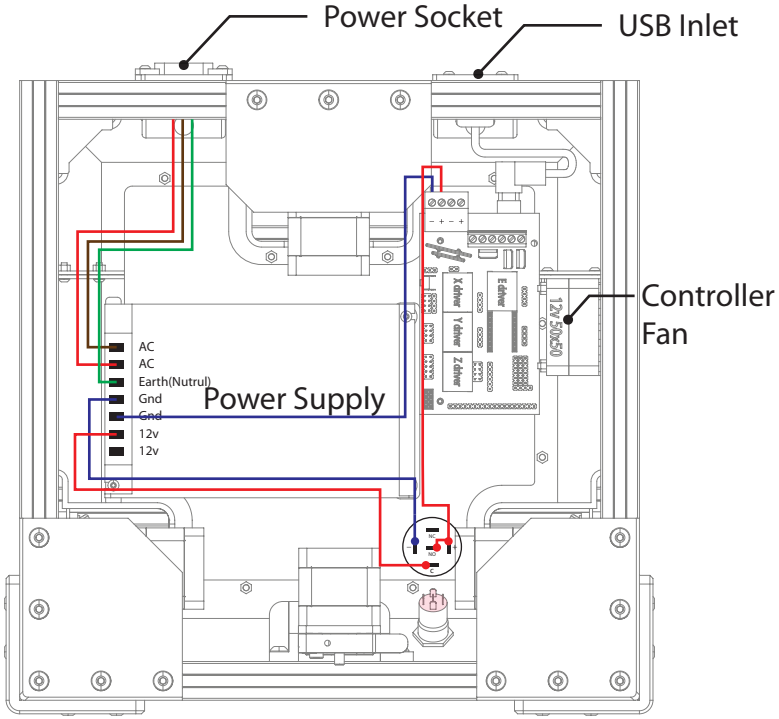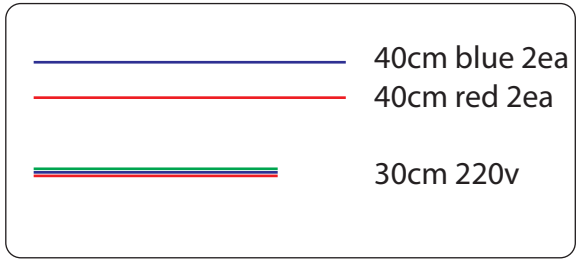
Main Switch assembly and Wiring