Print Head Assembly

[1] E3D v6 Module

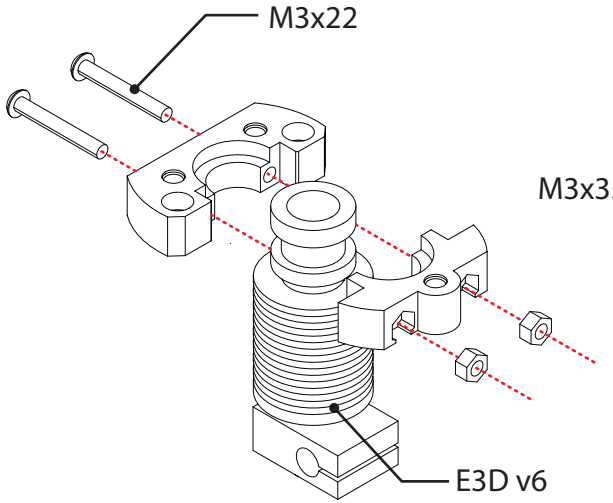

[2] Hotend Cooler

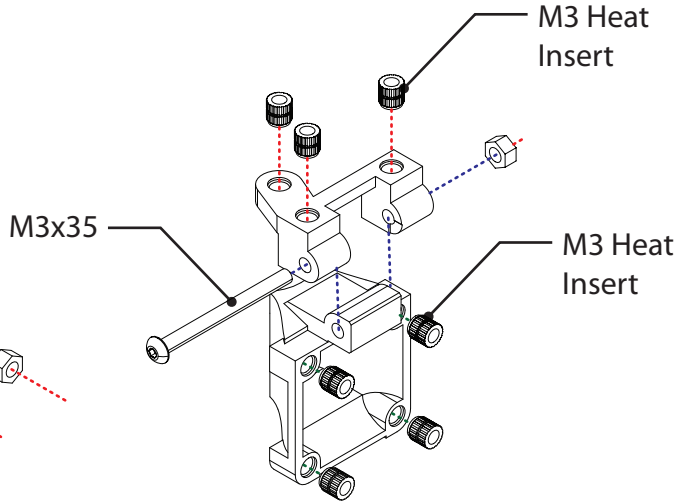

[3] Material Cooler

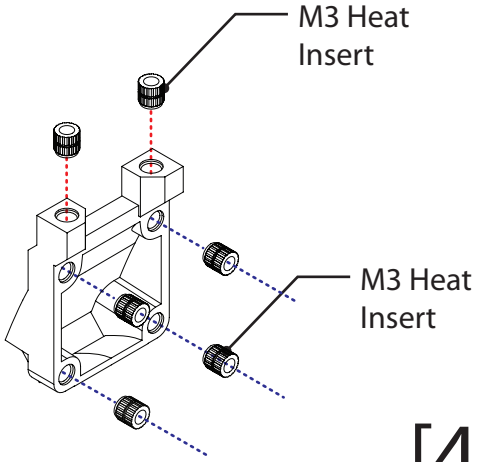

[4] Heater & Temp. sensor bracket

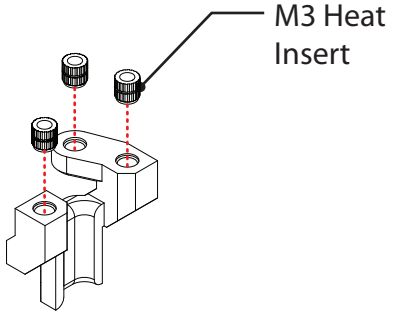

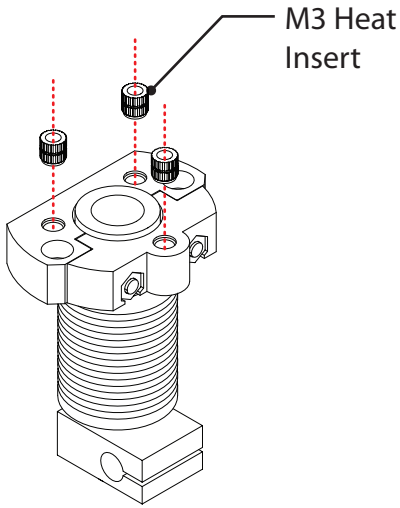

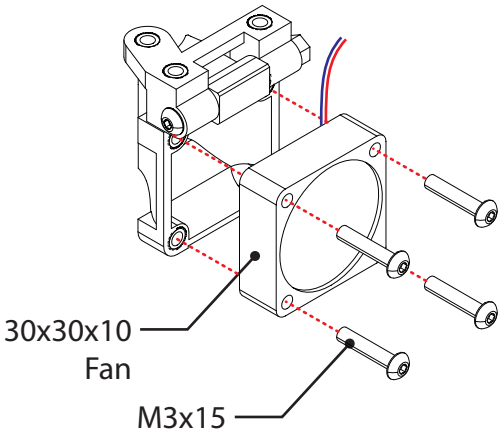

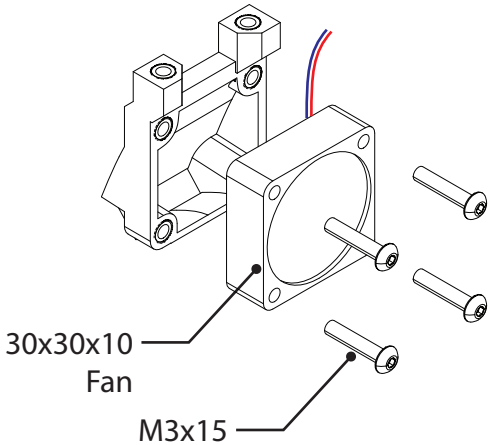

[5]

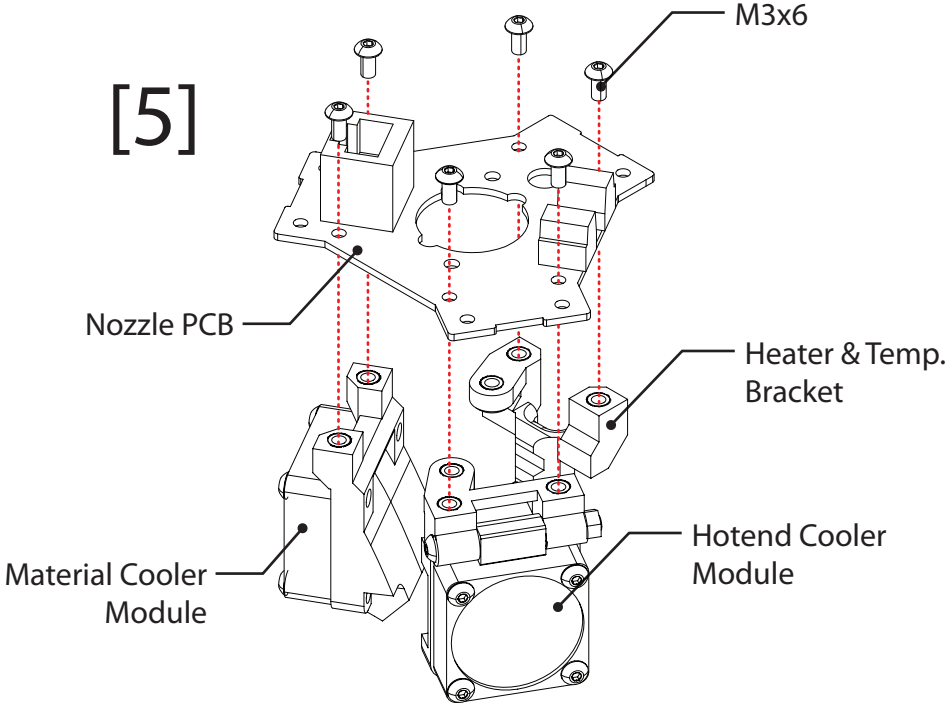
M3x6
Nozzle PCB
Heater & Temp.
Bracket
Material Cooler
Module
Hotend Cooler
Module

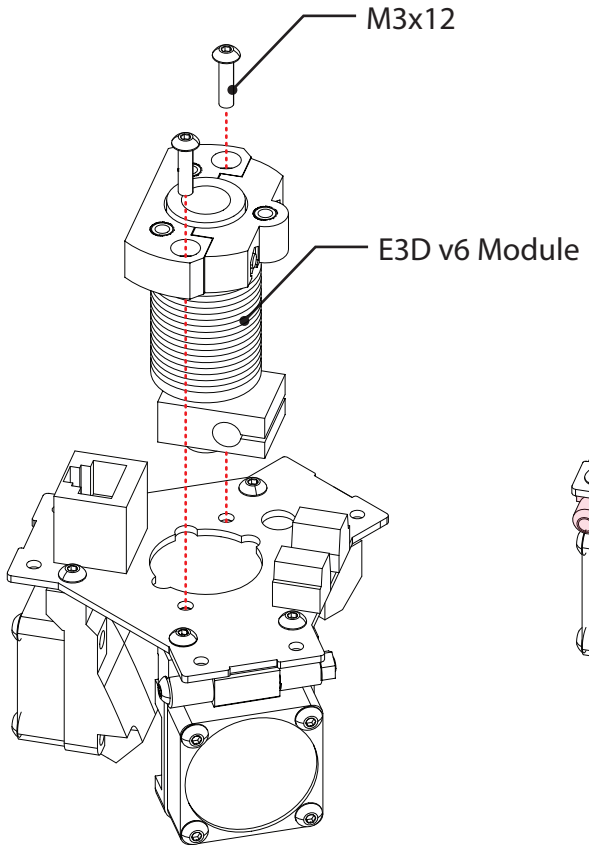
M3x12
E3D v6 Module

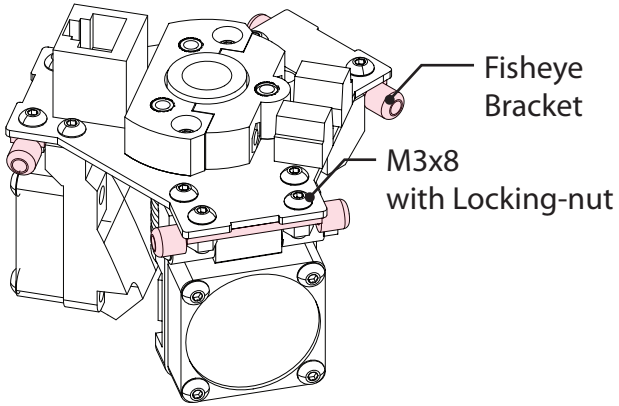
Fisheye
Bracket
M3x8
with Locking-nut

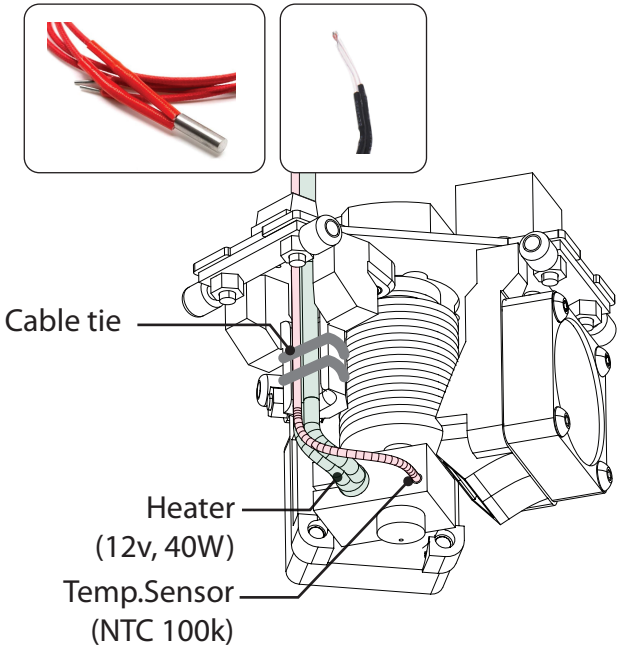
Cable tie
Heater
(12v, 40W)
Temp.Sensor
(NTC 100k)

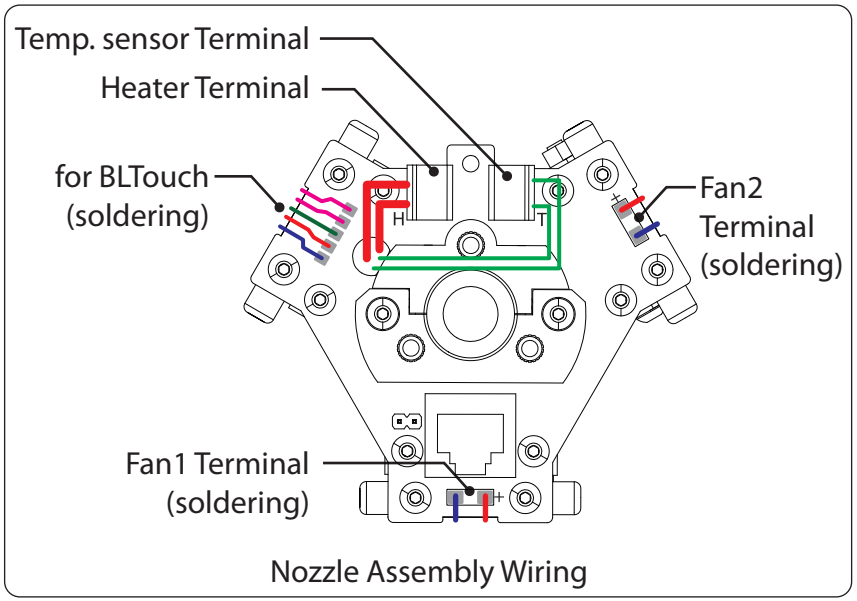
Temp. sensor Terminal
Heater Terminal
for BLTouch
(soldering)
Fan2
Terminal
(soldering)
Fan1 Terminal
(soldering)
Nozzle Assembly Wiring

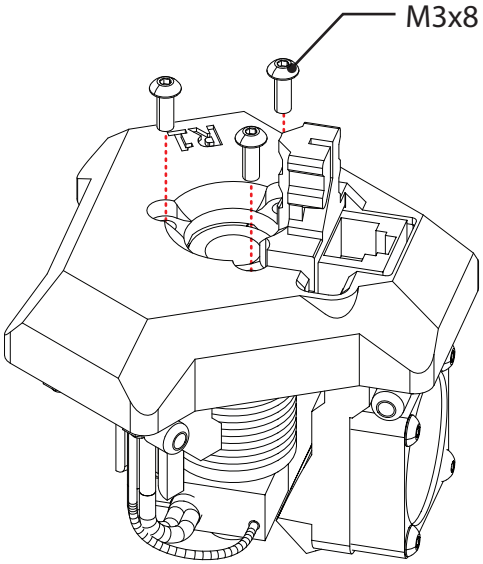
M3x8

- To make arm assembly, you need 6 arms. To make lighter, carbon rods recommanded. Length for center to center of Rodend Bearings must be “215mm”

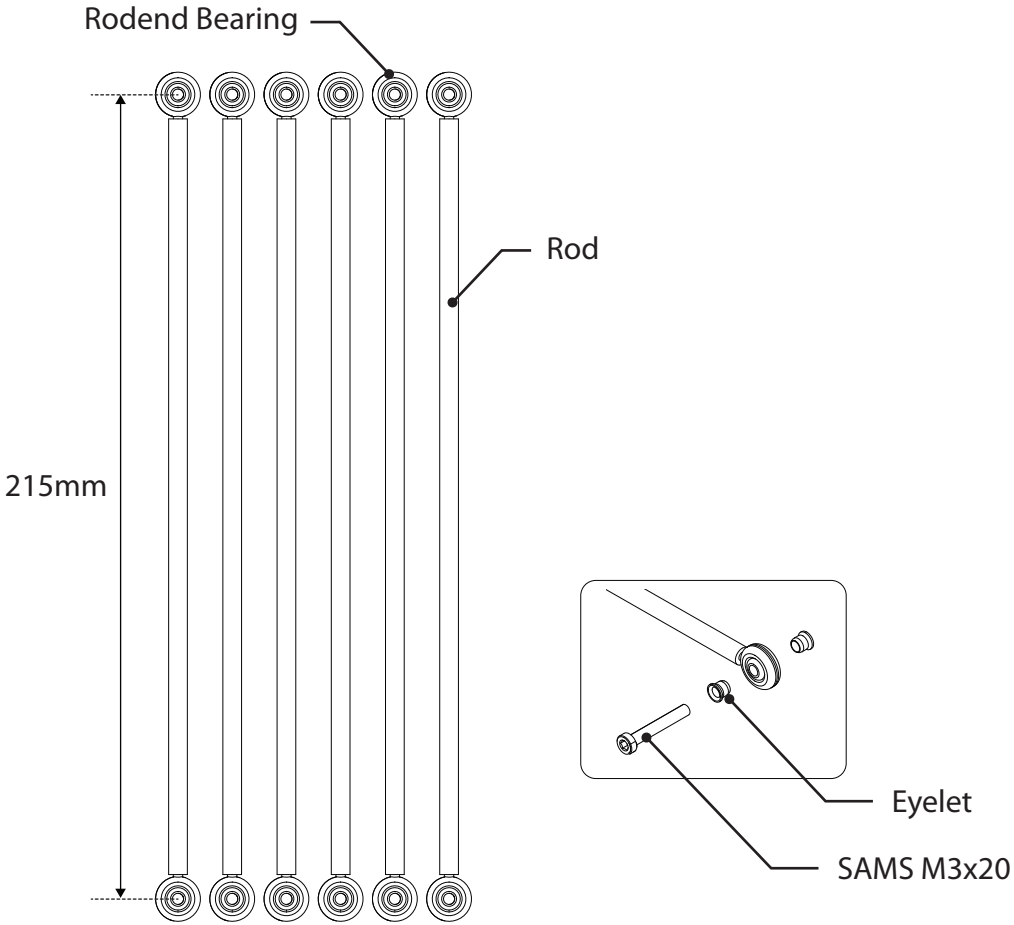

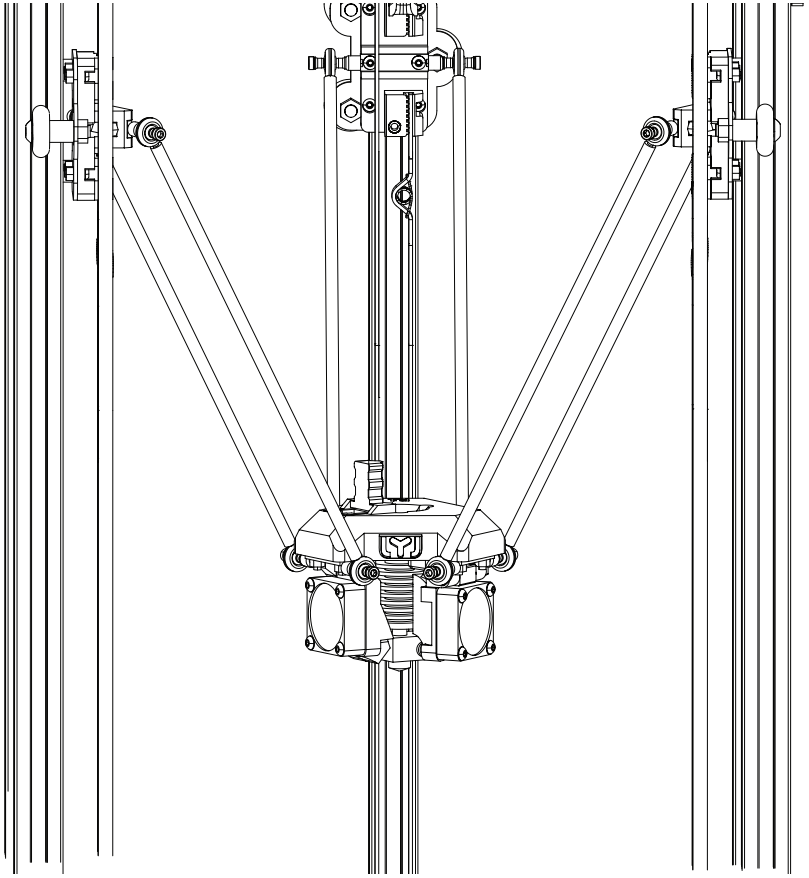

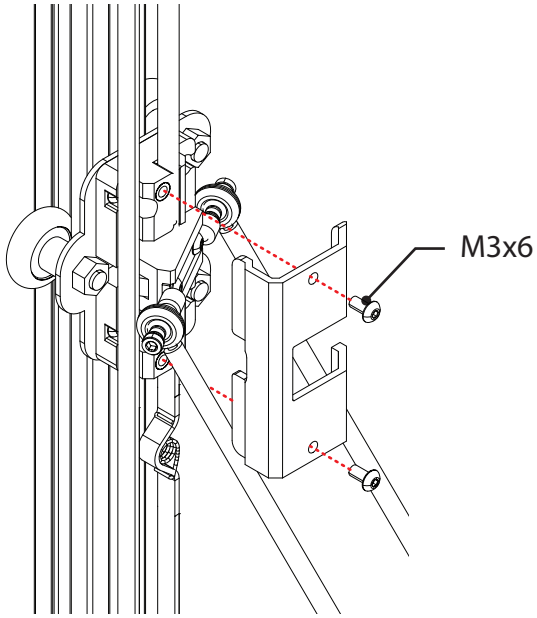

X slider cover
(Y slider cover is mirrored shape)

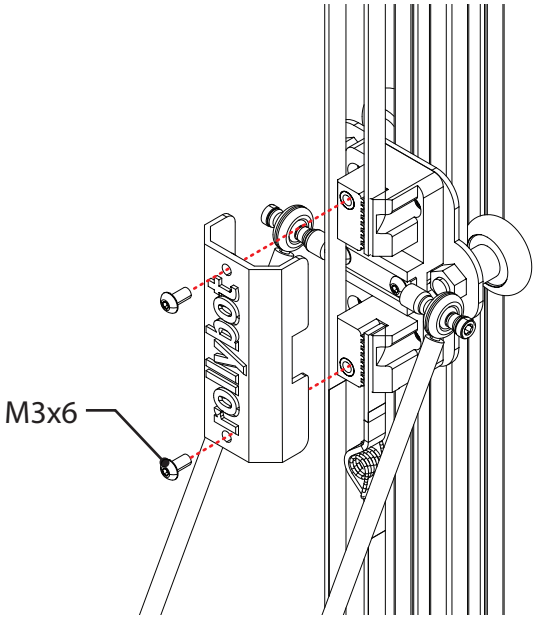

Z slider cover

Filament Tube and Hotend wire connecting

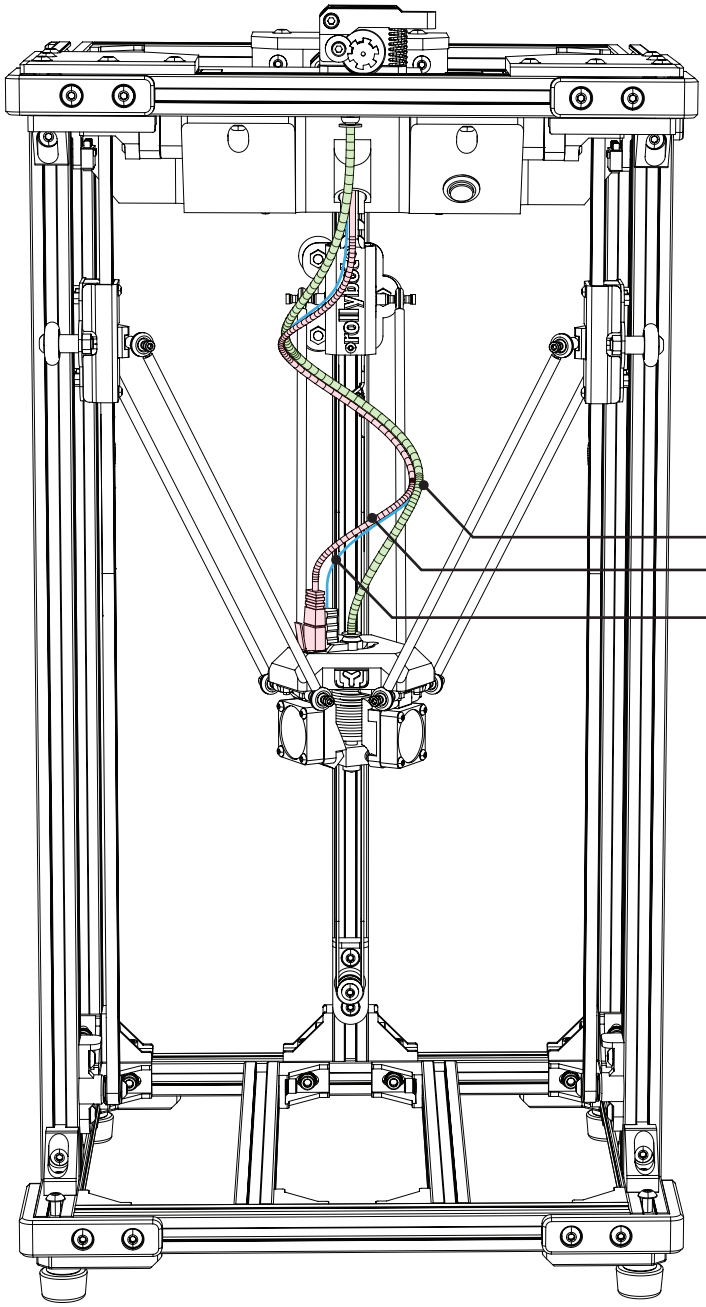

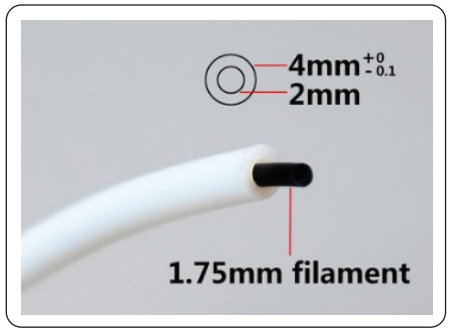

Filament Tube
Hotend Wire (Direct LAN cable)
Heater wire(Dupont 2pin female)

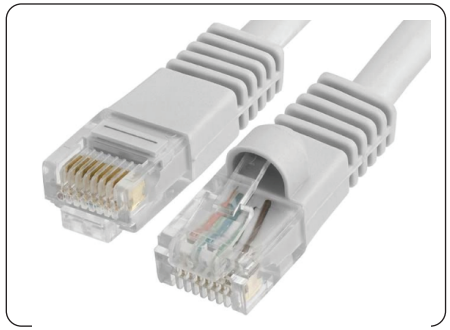

Direct UTP (24AWG)

Dupont 2pin female

Motor and Endstops Wiring

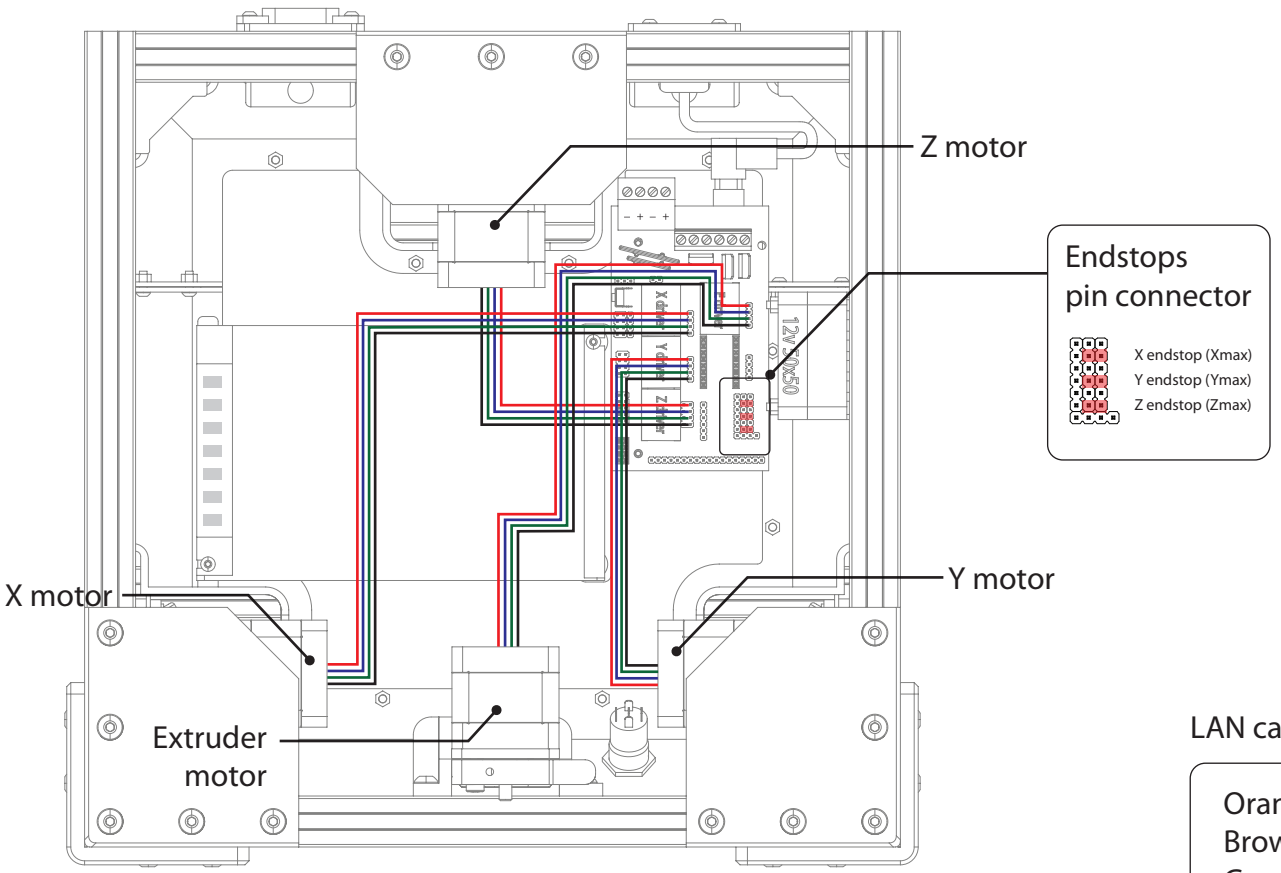

LAN cable wiring

Orange : Temperature Sensor (no polarity)
Brown : BLtouch wiring for Zmin
Green : Fan
Blue : 5V / Servo signal

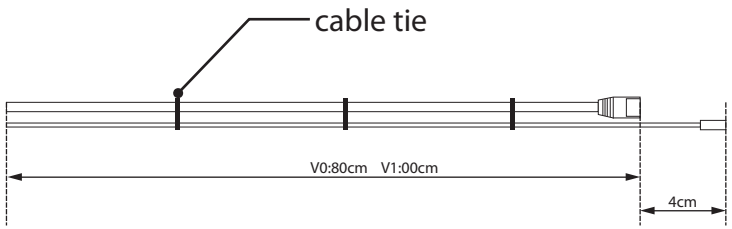

Recommanded cable length

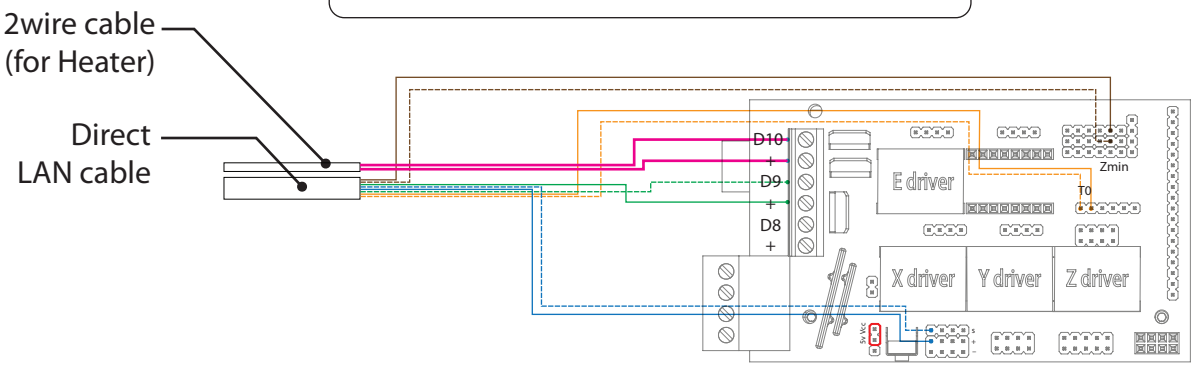

Display Assembly

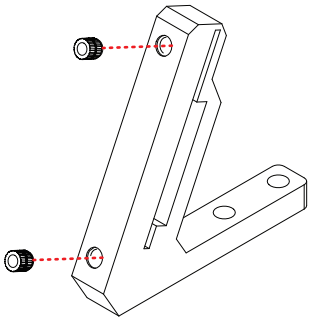

Left LCD bracket

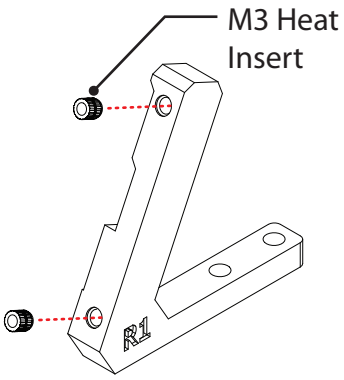

Right LCD bracket

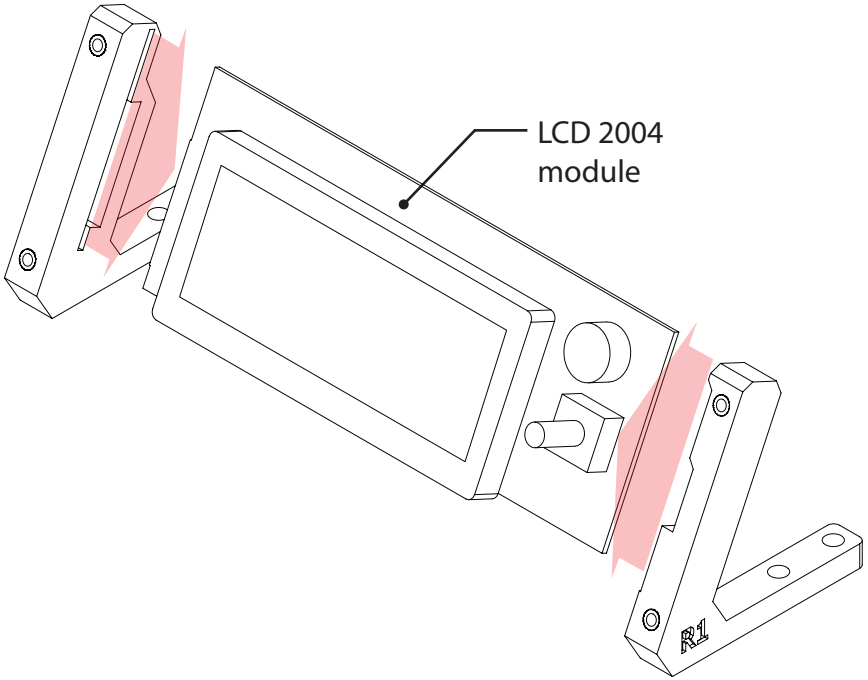

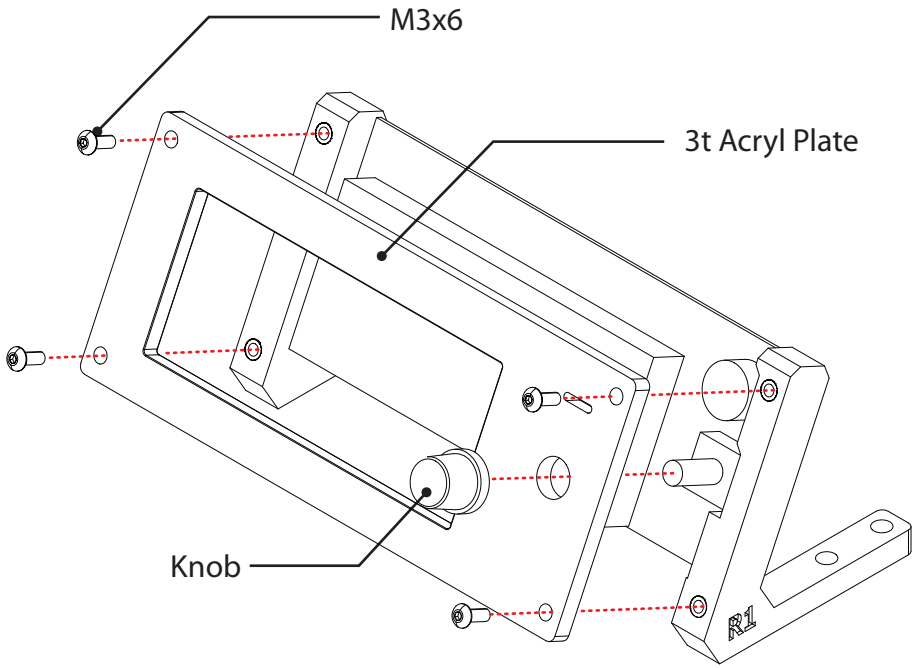

LCD wiring

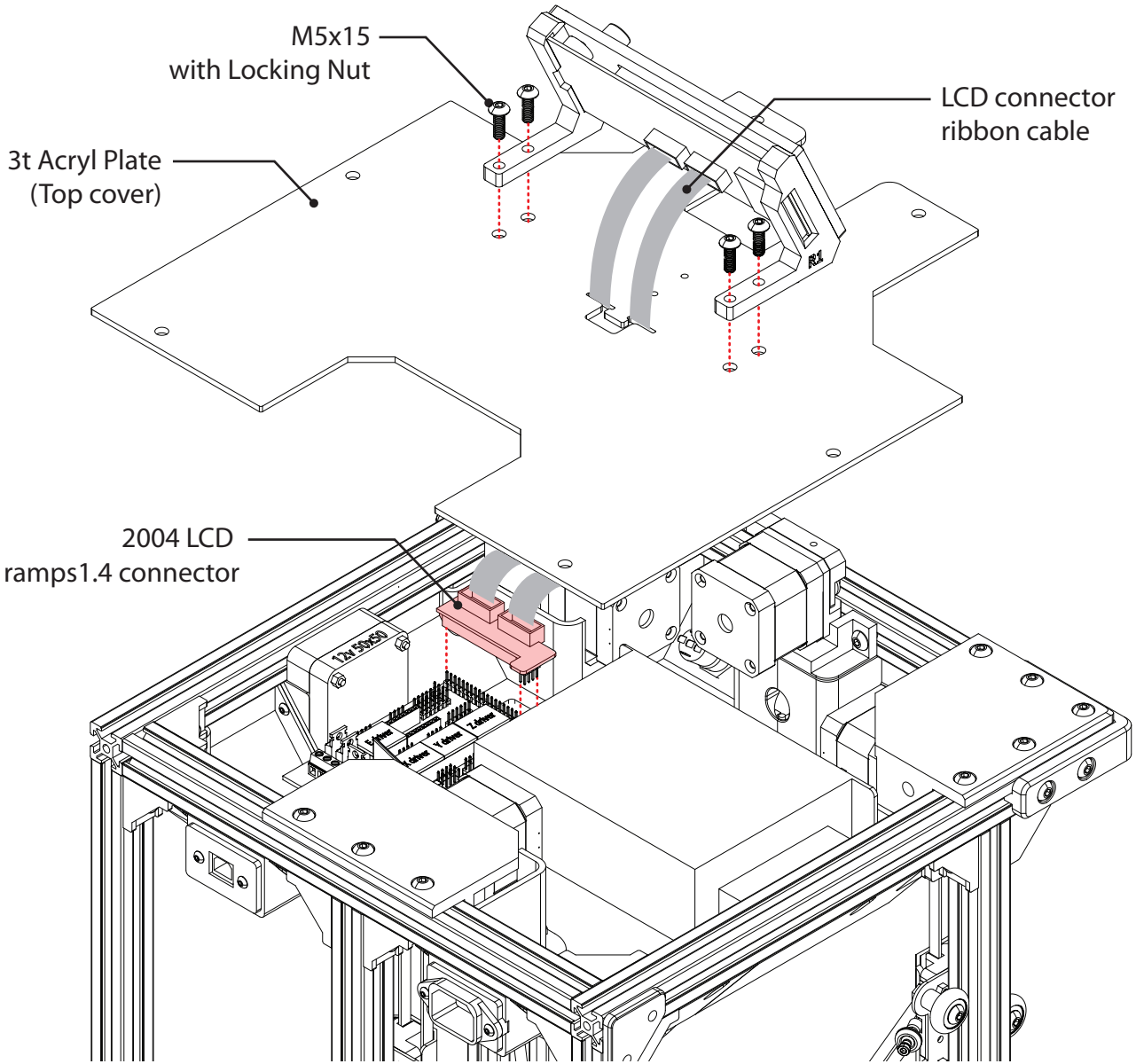

2004 LCD set

Top cover plate assembly

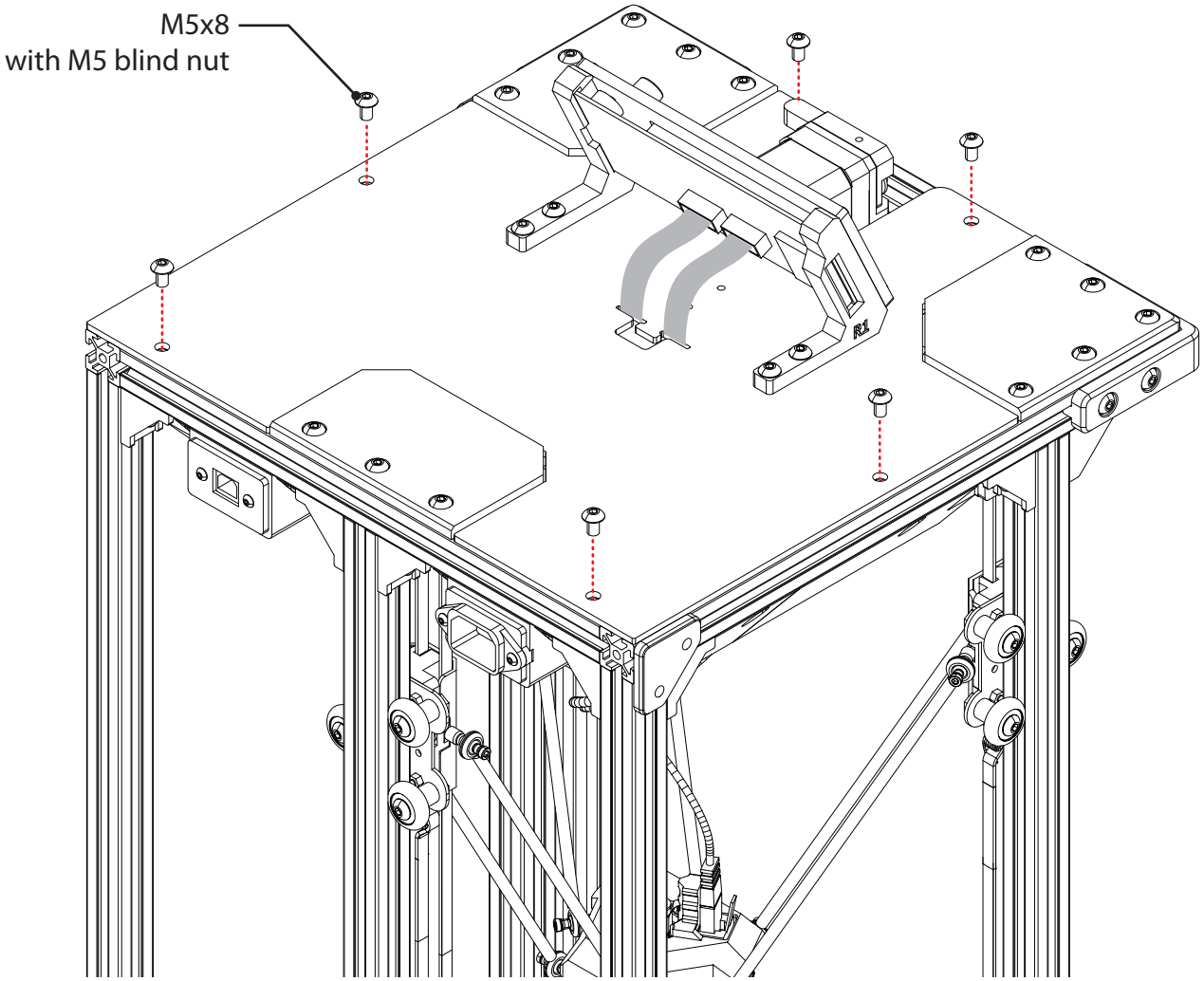

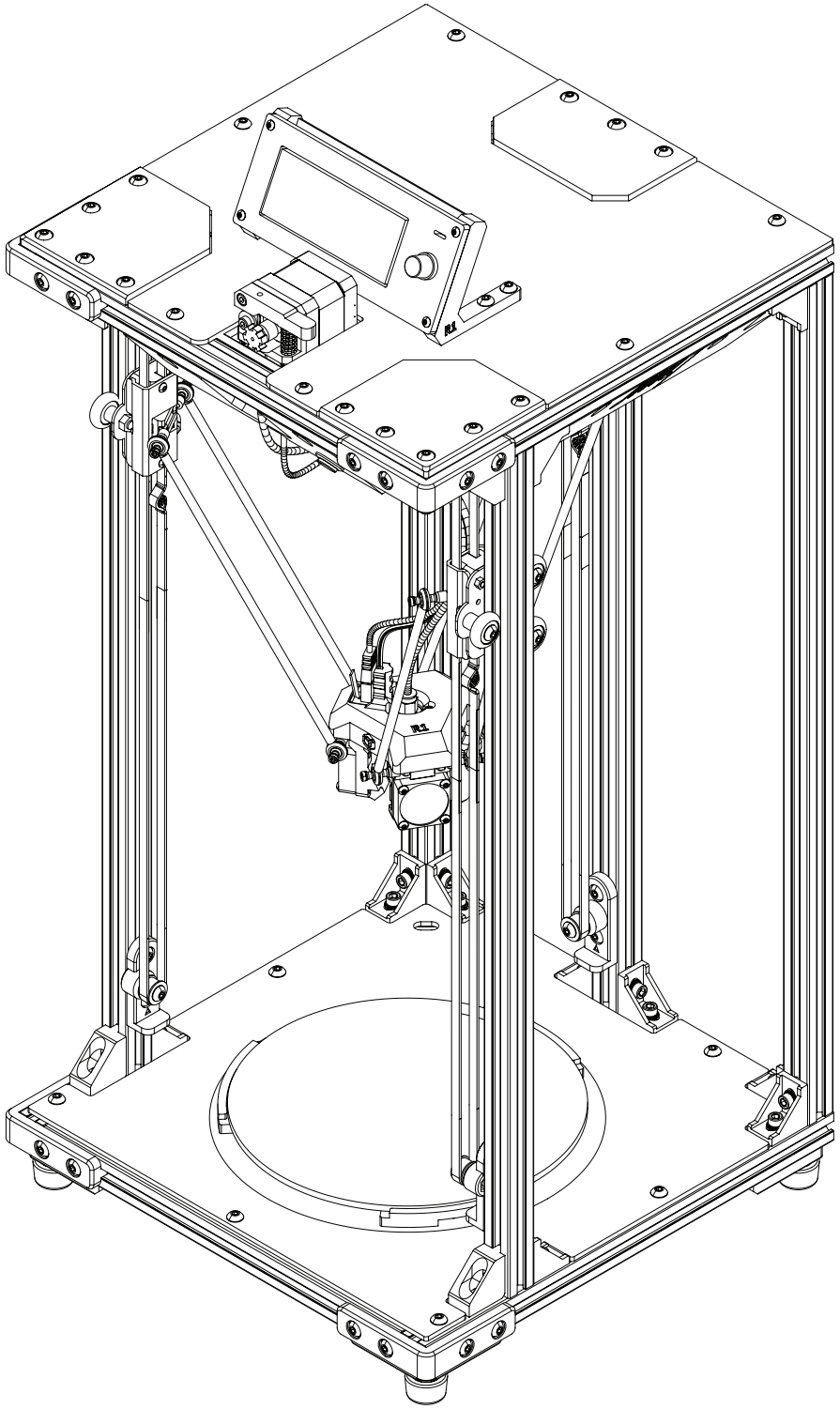

Spool Bridge

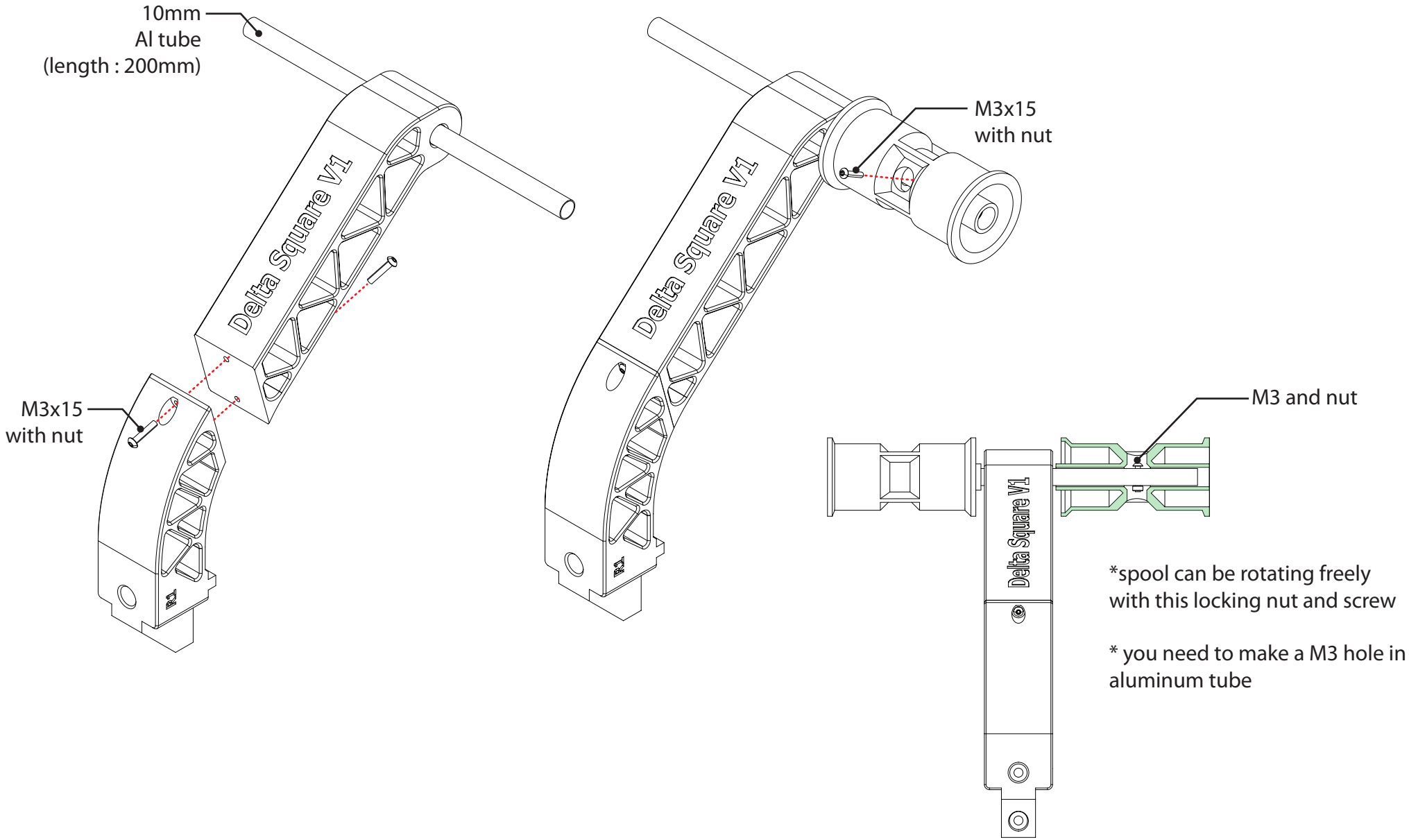

Spool Bridge

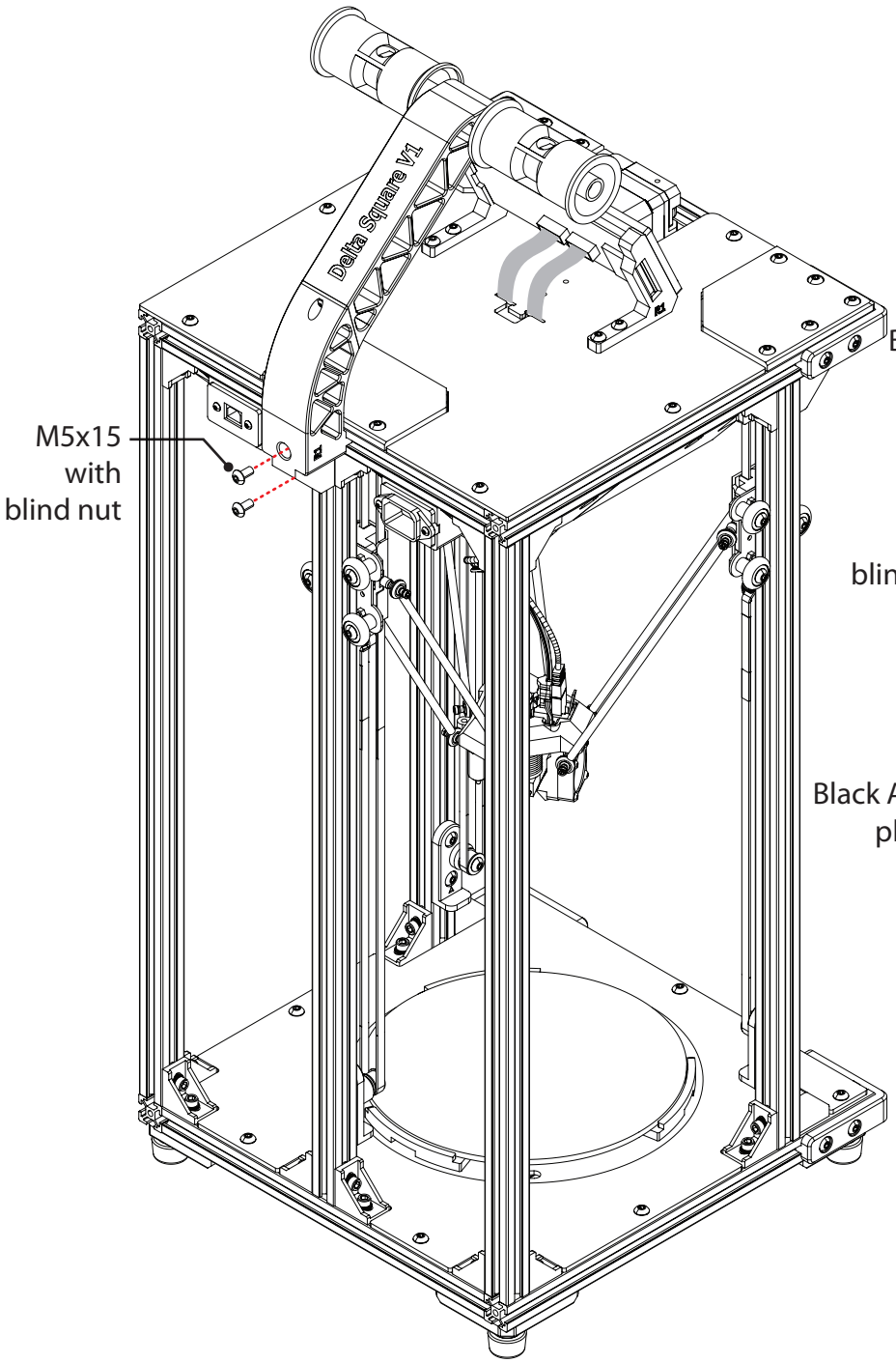

Back chamber plate

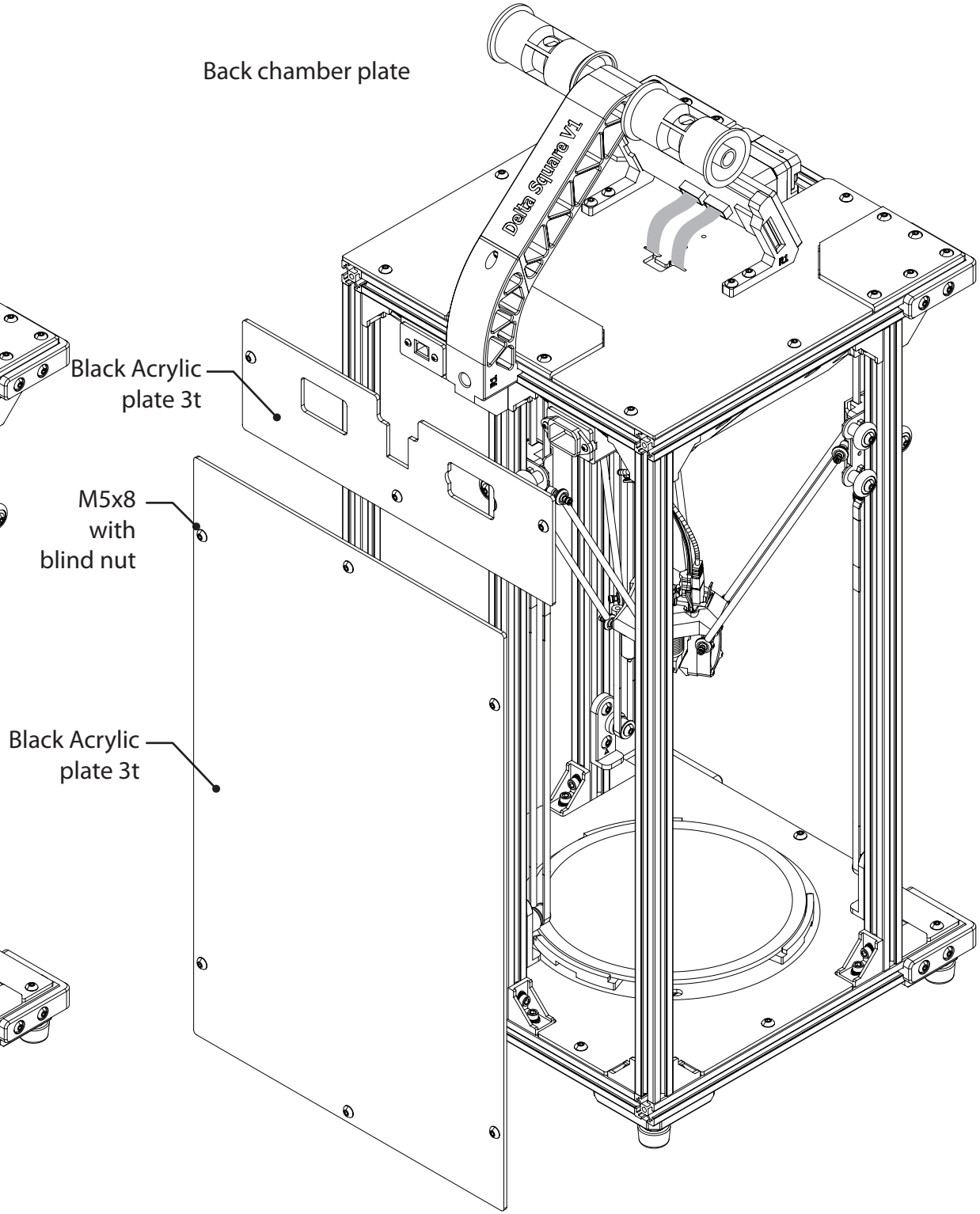

Door hinge and chamber side plate

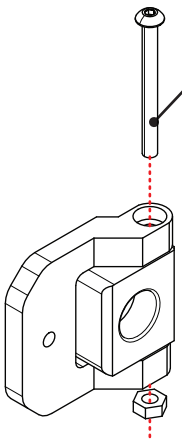

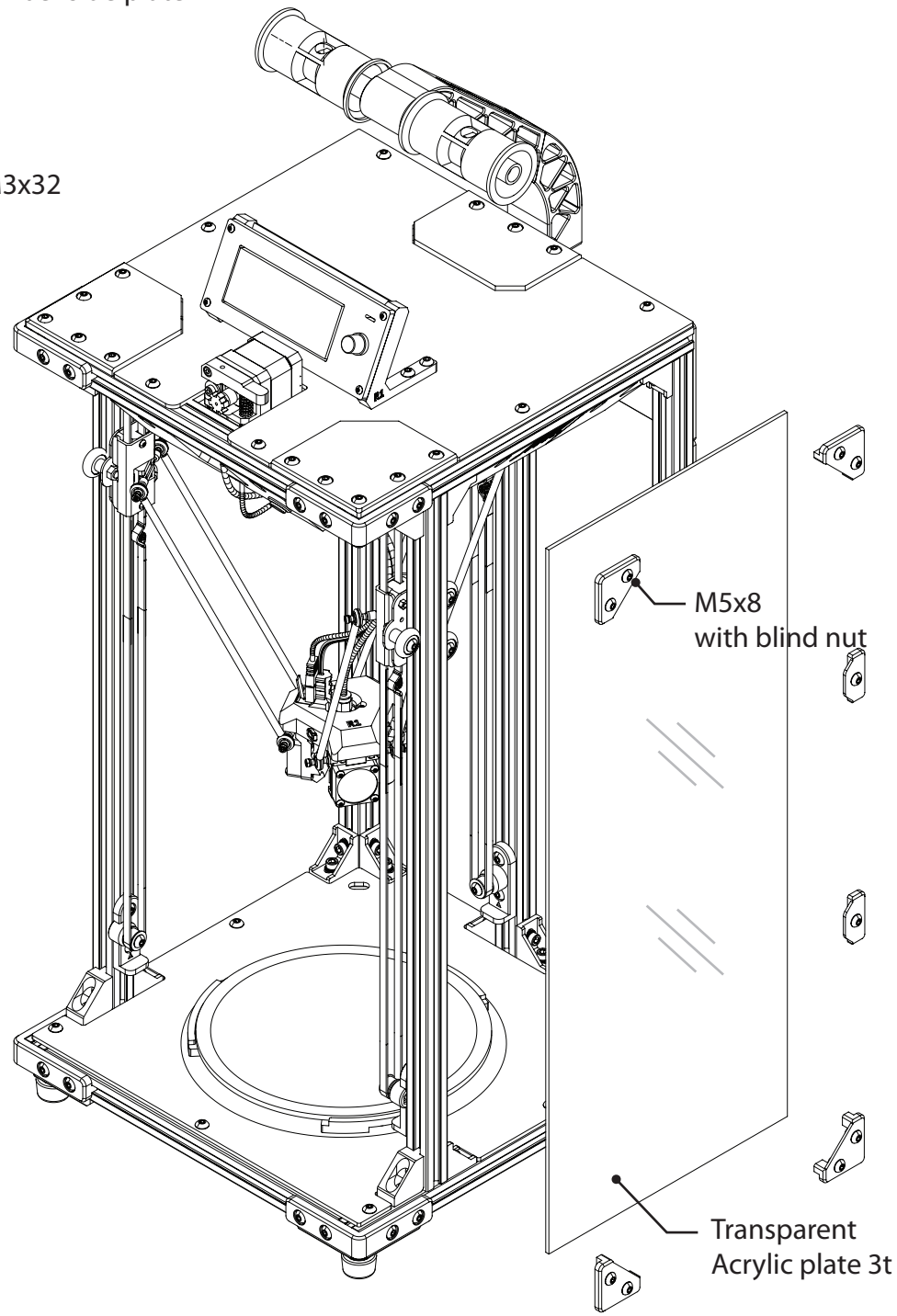

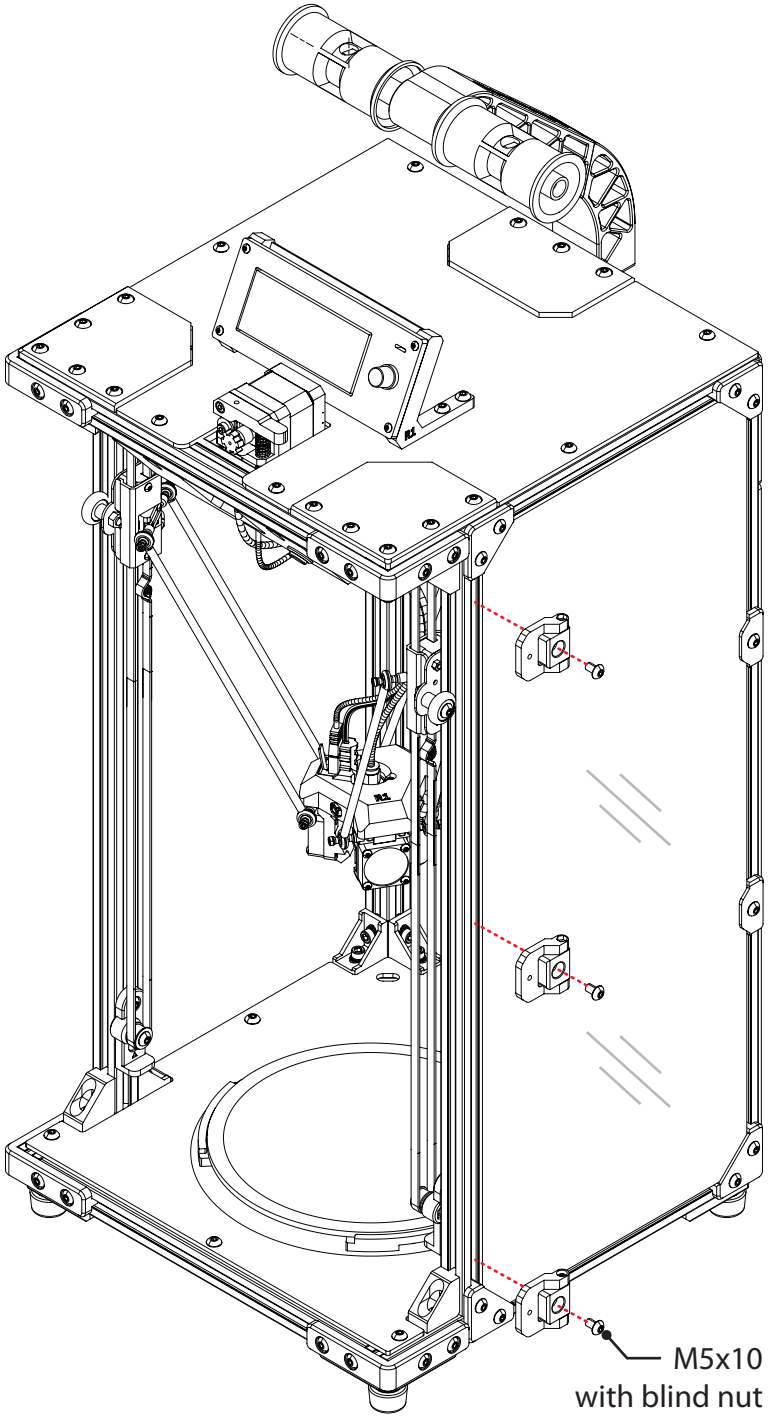

chamber door assembly

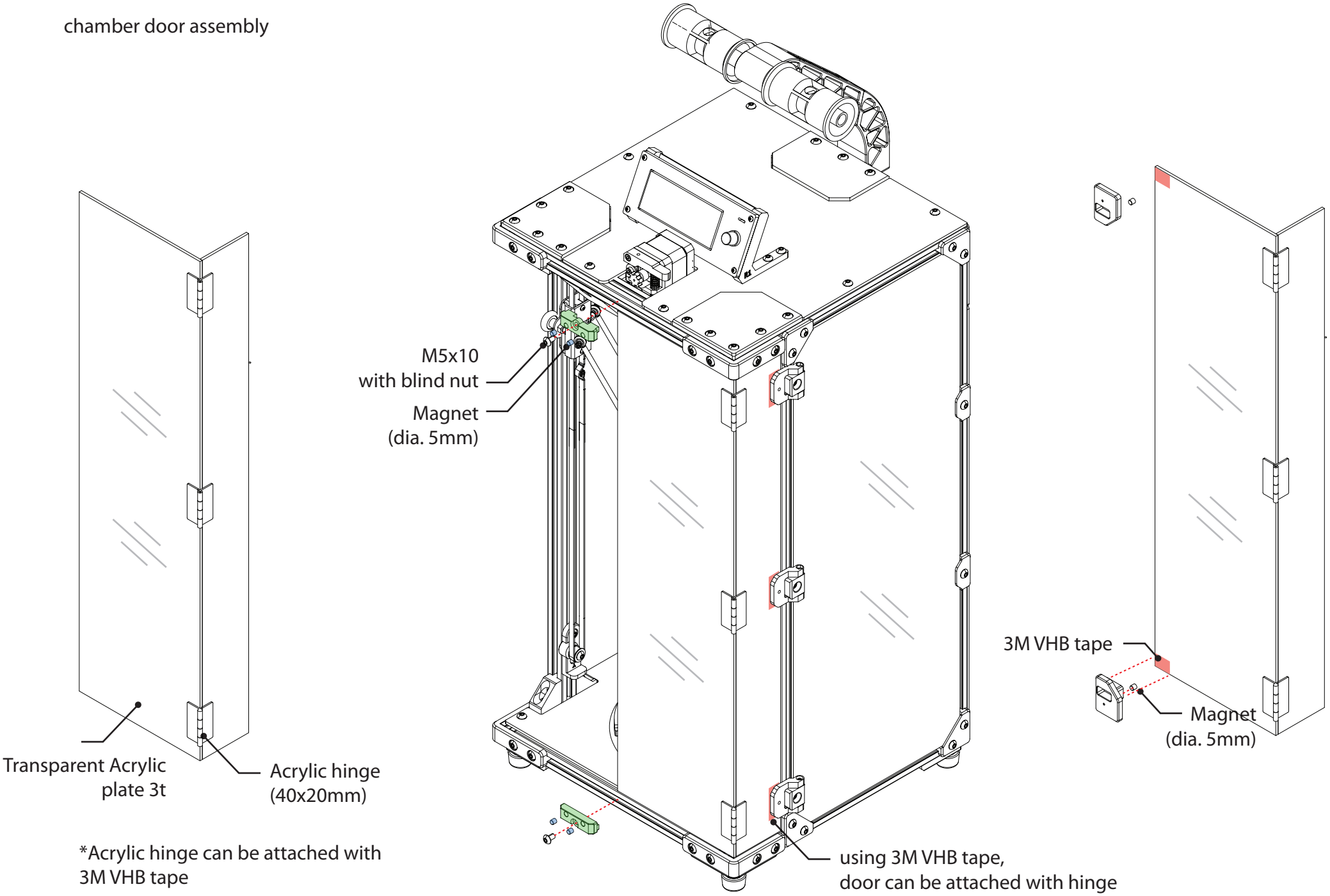

*Acrylic hinge can be attached with
3M VHB tape