MCP23017/MCP23S17

16-Bit I/O Expander with Serial Interface

Features

- 16-bit remote bidirectional I/O port
  - I/O pins default to input
- High-speed I^{2}C™ interface (**MCP23017**)
  - 100 kHz
  - 400 kHz
  - 1.7 MHz
- High-speed SPI interface (**MCP23S17**)
  - 10 MHz (max.)
- Three hardware address pins to allow up to eight devices on the bus
- Configurable interrupt output pins
  - Configurable as active-high, active-low or open-drain
- INTA and INTB can be configured to operate independently or together
- Configurable interrupt source
  - Interrupt-on-change from configured register defaults or pin changes
- Polarity Inversion register to configure the polarity of the input port data
- External Reset input
- Low standby current: 1 µA (max.)
- Operating voltage:
  - 1.8V to 5.5V @ -40°C to +85°C
  - 2.7V to 5.5V @ -40°C to +85°C
  - 4.5V to 5.5V @ -40°C to +125°C

Packages

- 28-pin PDIP (300 mil)
- 28-pin SOIC (300 mil)
- 28-pin SSOP
- 28-pin QFN

Package Types

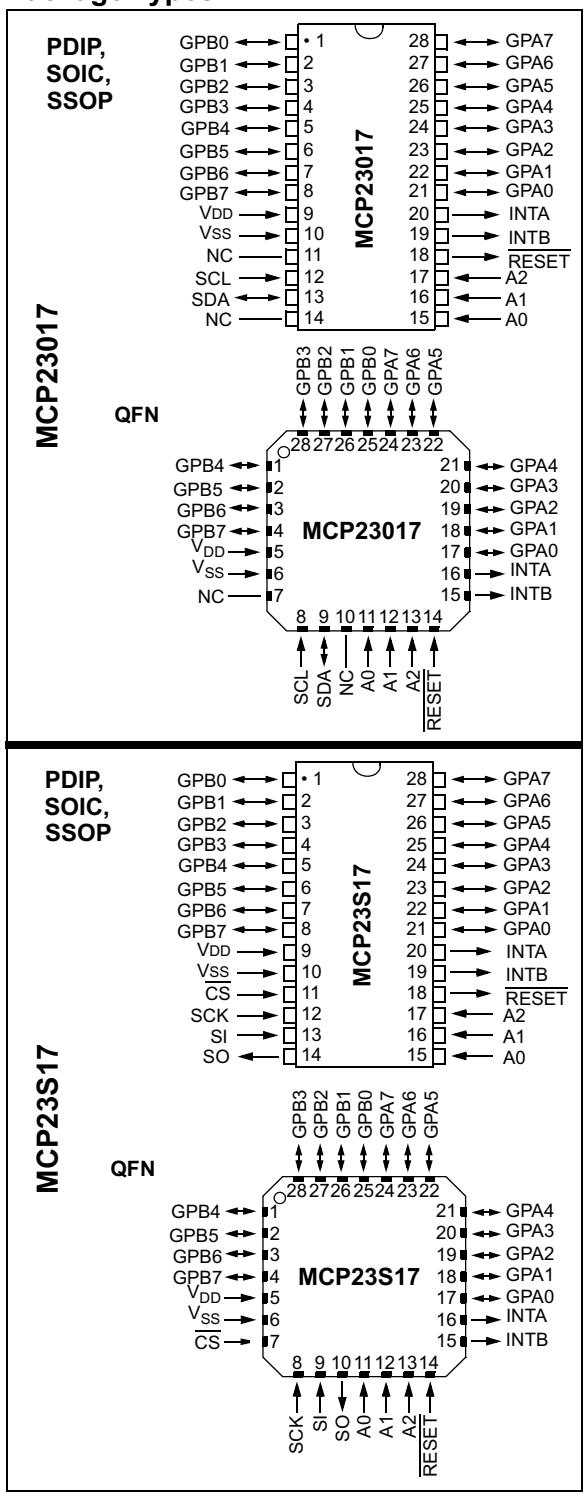

© 2007 Microchip Technology Inc.

Functional Block Diagram

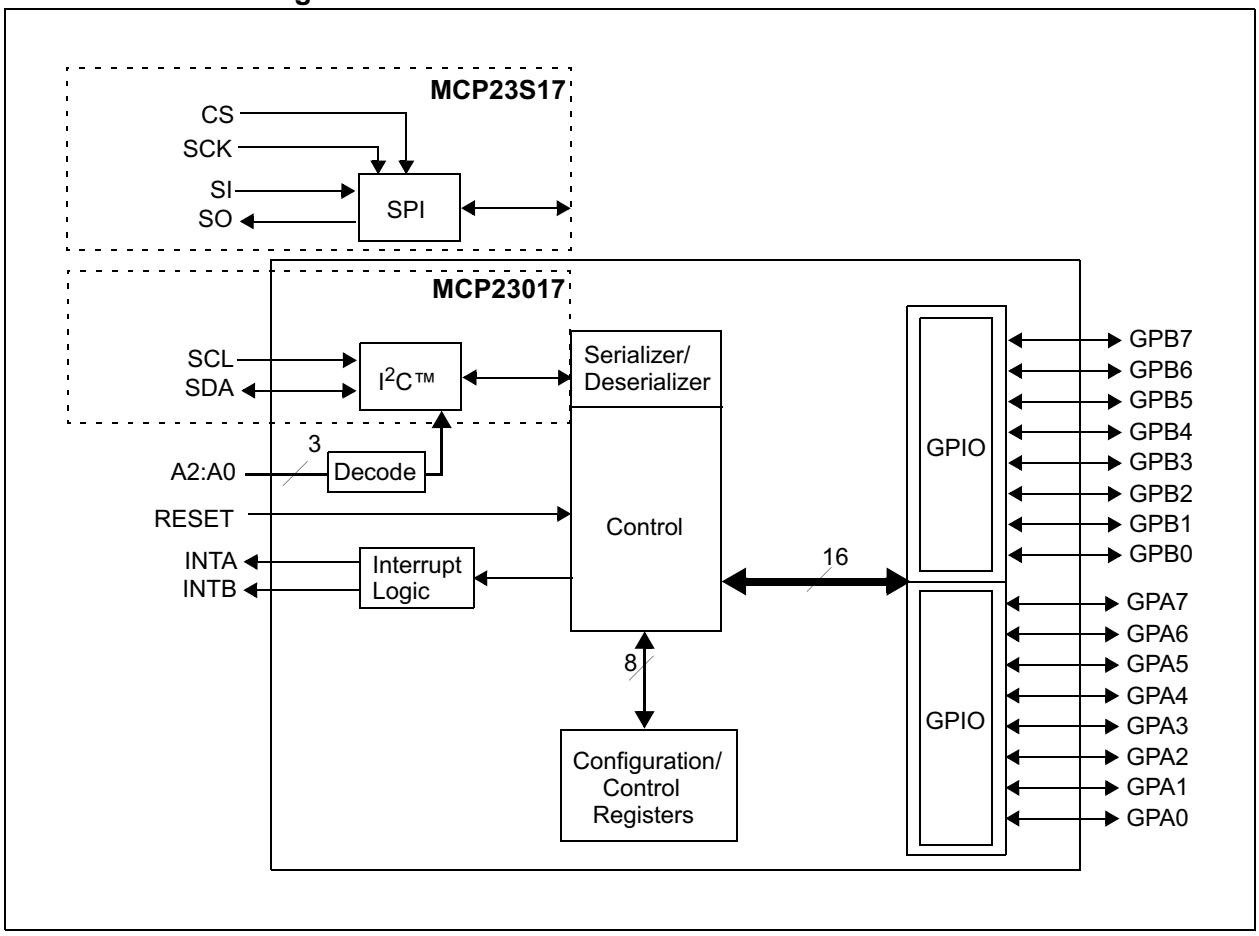

© 2007 Microchip Technology Inc.

1.0 DEVICE OVERVIEW

The MCP23017/MCP23S17 (MCP23X17) device family provides 16-bit, general purpose parallel I/O expansion for I^2C bus or SPI applications. The two devices differ only in the serial interface.

- MCP23017 – I^2C interface
- MCP23S17 – SPI interface

The MCP23X17 consists of multiple 8-bit configuration registers for input, output and polarity selection. The system master can enable the I/Os as either inputs or outputs by writing the I/O configuration bits (IODIRA/B). The data for each input or output is kept in the corresponding input or output register. The polarity of the Input Port register can be inverted with the Polarity Inversion register. All registers can be read by the system master.

The 16-bit I/O port functionally consists of two 8-bit ports (PORTA and PORTB). The MCP23X17 can be configured to operate in the 8-bit or 16-bit modes via IOCON.BANK.

There are two interrupt pins, INTA and INTB, that can be associated with their respective ports, or can be logically OR'ed together so that both pins will activate if either port causes an interrupt.

The interrupt output can be configured to activate under two conditions (mutually exclusive):

1. When any input state differs from its corresponding Input Port register state. This is used to indicate to the system master that an input state has changed.
2. When an input state differs from a preconfigured register value (DEFVAL register).

The Interrupt Capture register captures port values at the time of the interrupt, thereby saving the condition that caused the interrupt.

The Power-on Reset (POR) sets the registers to their default values and initializes the device state machine.

The hardware address pins are used to determine the device address.

1.1 Pin Descriptions

TABLE 1-1: PINOUT DESCRIPTION

Pin Name	PDIP/ SOIC/ SSOP	QFN	Pin Type	Function
GPB0	1	25	I/O	Bidirectional I/O pin. Can be enabled for interrupt-on-change and/or internal weak pull-up resistor.
GPB1	2	26	I/O	Bidirectional I/O pin. Can be enabled for interrupt-on-change and/or internal weak pull-up resistor.
GPB2	3	27	I/O	Bidirectional I/O pin. Can be enabled for interrupt-on-change and/or internal weak pull-up resistor.
GPB3	4	28	I/O	Bidirectional I/O pin. Can be enabled for interrupt-on-change and/or internal weak pull-up resistor.
GPB4	5	1	I/O	Bidirectional I/O pin. Can be enabled for interrupt-on-change and/or internal weak pull-up resistor.
GPB5	6	2	I/O	Bidirectional I/O pin. Can be enabled for interrupt-on-change and/or internal weak pull-up resistor.
GPB6	7	3	I/O	Bidirectional I/O pin. Can be enabled for interrupt-on-change and/or internal weak pull-up resistor.
GPB7	8	4	I/O	Bidirectional I/O pin. Can be enabled for interrupt-on-change and/or internal weak pull-up resistor.
V_{DD}	9	5	P	Power
V_{SS}	10	6	P	Ground
NC/$\overline{CS}$	11	7	I	NC (MCP23017), Chip Select (MCP23S17)
SCL/SCK	12	8	I	Serial clock input
SDA/SI	13	9	I/O	Serial data I/O (MCP23017), Serial data input (MCP23S17)
NC/SO	14	10	O	NC (MCP23017), Serial data out (MCP23S17)
A0	15	11	I	Hardware address pin. Must be externally biased.
A1	16	12	I	Hardware address pin. Must be externally biased.
A2	17	13	I	Hardware address pin. Must be externally biased.
$\overline{RESET}$	18	14	I	Hardware reset. Must be externally biased.
INTB	19	15	O	Interrupt output for PORTB. Can be configured as active-high, active-low or open-drain.
INTA	20	16	O	Interrupt output for PORTA. Can be configured as active-high, active-low or open-drain.
GPA0	21	17	I/O	Bidirectional I/O pin. Can be enabled for interrupt-on-change and/or internal weak pull-up resistor.
GPA1	22	18	I/O	Bidirectional I/O pin. Can be enabled for interrupt-on-change and/or internal weak pull-up resistor.
GPA2	23	19	I/O	Bidirectional I/O pin. Can be enabled for interrupt-on-change and/or internal weak pull-up resistor.
GPA3	24	20	I/O	Bidirectional I/O pin. Can be enabled for interrupt-on-change and/or internal weak pull-up resistor.
GPA4	25	21	I/O	Bidirectional I/O pin. Can be enabled for interrupt-on-change and/or internal weak pull-up resistor.
GPA5	26	22	I/O	Bidirectional I/O pin. Can be enabled for interrupt-on-change and/or internal weak pull-up resistor.
GPA6	27	23	I/O	Bidirectional I/O pin. Can be enabled for interrupt-on-change and/or internal weak pull-up resistor.
GPA7	28	24	I/O	Bidirectional I/O pin. Can be enabled for interrupt-on-change and/or internal weak pull-up resistor.

© 2007 Microchip Technology Inc.

1.2 Power-on Reset (POR)

The on-chip POR circuit holds the device in reset until VDD has reached a high enough voltage to deactivate the POR circuit (i.e., release the device from reset). The maximum VDD rise time is specified in **Section 2.0 "Electrical Characteristics"**.

When the device exits the POR condition (releases reset), device operating parameters (i.e., voltage, temperature, serial bus frequency, etc.) must be met to ensure proper operation.

1.3 Serial Interface

This block handles the functionality of the I^{2}C (MCP23017) or SPI (MCP23S17) interface protocol. The MCP23X17 contains 22 individual registers (11 register pairs) that can be addressed through the Serial Interface block, as shown in Table 1-2.

TABLE 1-2: REGISTER ADDRESSES

Address IOCON.BANK = 1	Address IOCON.BANK = 0	Access to:
00h	00h	IODIRA
10h	01h	IODIRB
01h	02h	IPOLA
11h	03h	IPOLB
02h	04h	GPINTENA
12h	05h	GPINTENB
03h	06h	DEFVALA
13h	07h	DEFVALB
04h	08h	INTCONA
14h	09h	INTCONB
05h	0Ah	IOCON
15h	0Bh	IOCON
06h	0Ch	GPPUA
16h	0Dh	GPPUB
07h	0Eh	INTFA
17h	0Fh	INTFB
08h	10h	INTCAPA
18h	11h	INTCAPB
09h	12h	GPIOA
19h	13h	GPIOB
0Ah	14h	OLATA
1Ah	15h	OLATB

1.3.1 BYTE MODE AND SEQUENTIAL MODE

The MCP23X17 family has the ability to operate in Byte mode or Sequential mode (IOCON.SEQOP).

Byte Mode disables automatic Address Pointer incrementing. When operating in Byte mode, the MCP23X17 family does not increment its internal address counter after each byte during the data transfer. This gives the ability to continually access the same address by providing extra clocks (without additional control bytes). This is useful for polling the GPIO register for data changes or for continually writing to the output latches.

A special mode **(Byte mode with IOCON.BANK = 0)** causes the address pointer to toggle between associated A/B register pairs. For example, if the BANK bit is cleared and the Address Pointer is initially set to address 12h (GPIOA) or 13h (GPIOB), the pointer will toggle between GPIOA and GPIOB. Note that the Address Pointer can initially point to either address in the register pair.

Sequential mode enables automatic address pointer incrementing. When operating in Sequential mode, the MCP23X17 family increments its address counter after each byte during the data transfer. The Address Pointer automatically rolls over to address 00h after accessing the last register.

These two modes are not to be confused with single writes/reads and continuous writes/reads that are serial protocol sequences. For example, the device may be configured for Byte mode and the master may perform a continuous read. In this case, the MCP23X17 would not increment the Address Pointer and would repeatedly drive data from the same location.

1.3.2 I^{2}C INTERFACE

1.3.2.1 I^{2}C Write Operation

The I^{2}C write operation includes the control byte and register address sequence, as shown in the bottom of Figure 1-1. This sequence is followed by eight bits of data from the master and an Acknowledge (ACK) from the MCP23017. The operation is ended with a Stop (P) or Restart (SR) condition being generated by the master.

Data is written to the MCP23017 after every byte transfer. If a Stop or Restart condition is generated during a data transfer, the data will not be written to the MCP23017.

Both "byte writes" and "sequential writes" are supported by the MCP23017. If Sequential mode is enabled (IOCON, SEQOP = 0) (default), the MCP23017 increments its address counter after each ACK during the data transfer.

1.3.2.2 I^{2}C Read Operation

I^{2}C Read operations include the control byte sequence, as shown in the bottom of Figure 1-1. This sequence is followed by another control byte (including the Start condition and ACK) with the R/W bit set (R/W = 1). The MCP23017 then transmits the data contained in the addressed register. The sequence is ended with the master generating a Stop or Restart condition.

1.3.2.3 I^{2}C Sequential Write/Read

For sequential operations (Write or Read), instead of transmitting a Stop or Restart condition after the data transfer, the master clocks the next byte pointed to by the address pointer (see **Section 1.3.1 "Byte Mode and Sequential Mode"** for details regarding sequential operation control).

The sequence ends with the master sending a Stop or Restart condition.

The MCP23017 Address Pointer will roll over to address zero after reaching the last register address.

Refer to Figure 1-1.

1.3.3 SPI INTERFACE

1.3.3.1 SPI Write Operation

The SPI write operation is started by lowering $\overline{CS}$. The Write command (slave address with R/W bit cleared) is then clocked into the device. The opcode is followed by an address and at least one data byte.

1.3.3.2 SPI Read Operation

The SPI read operation is started by lowering $\overline{CS}$. The SPI read command (slave address with R/W bit set) is then clocked into the device. The opcode is followed by an address, with at least one data byte being clocked out of the device.

1.3.3.3 SPI Sequential Write/Read

For sequential operations, instead of deselecting the device by raising $\overline{CS}$, the master clocks the next byte pointed to by the Address Pointer. (see **Section 1.3.1 "Byte Mode and Sequential Mode"** for details regarding sequential operation control).

The sequence ends by the raising of $\overline{CS}$.

The MCP23S17 Address Pointer will roll over to address zero after reaching the last register address.

© 2007 Microchip Technology Inc.

FIGURE 1-1: MCP23017 I²C™ DEVICE PROTOCOL

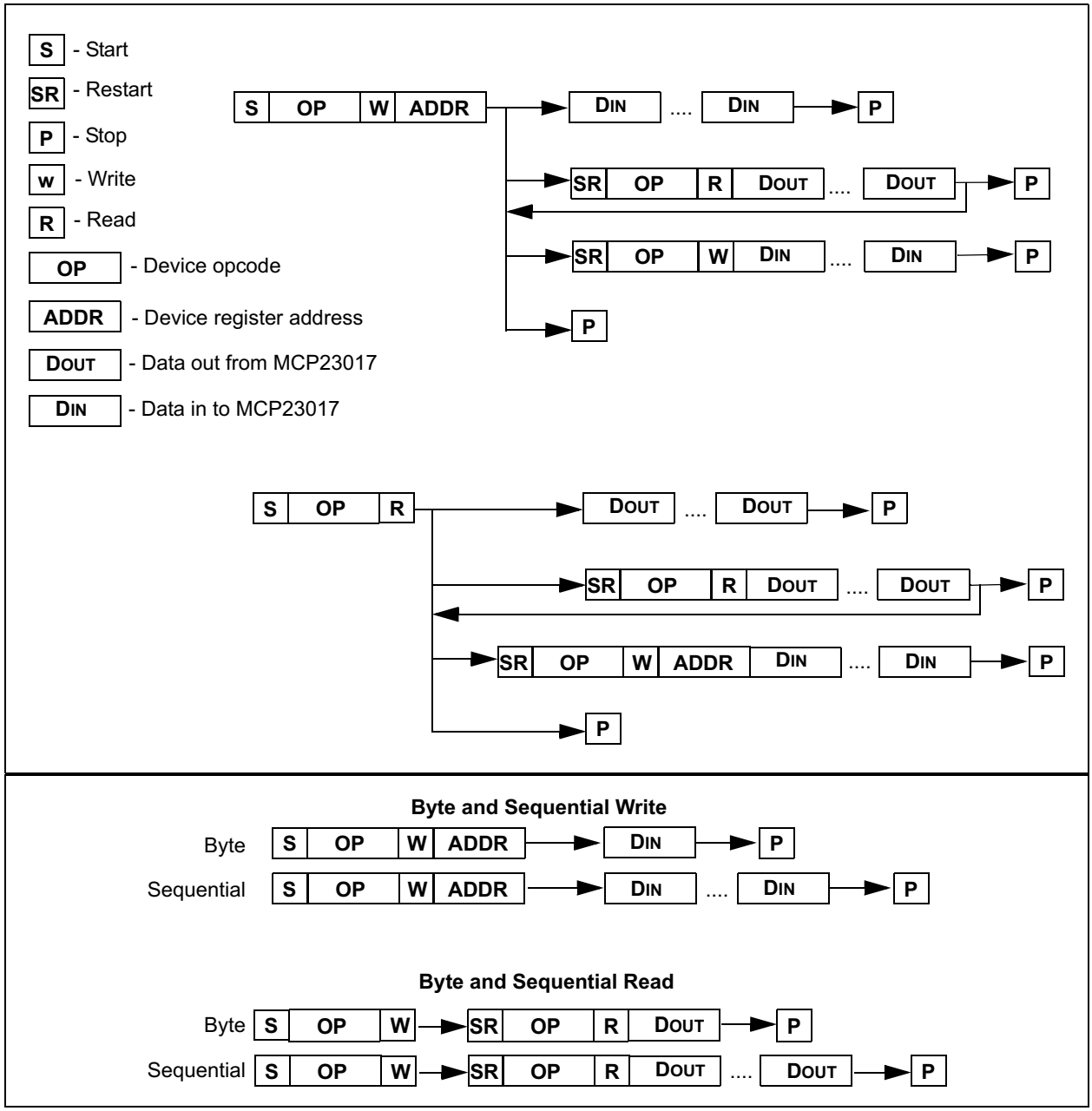

1.4 Hardware Address Decoder

The hardware address pins are used to determine the device address. To address a device, the corresponding address bits in the control byte must match the pin state. The pins must be biased externally.

1.4.1 ADDRESSING I²C DEVICES (MCP23017)

The MCP23017 is a slave I²C interface device that supports 7-bit slave addressing, with the read/write bit filling out the control byte. The slave address contains four fixed bits and three user-defined hardware address bits (pins A2, A1 and A0). Figure 1-2 shows the control byte format.

1.4.2 ADDRESSING SPI DEVICES (MCP23S17)

The MCP23S17 is a slave SPI device. The slave address contains four fixed bits and three user-defined hardware address bits (if enabled via IOCON.HAEN) (pins A2, A1 and A0) with the read/write bit filling out the control byte. Figure 1-3 shows the control byte format. The address pins should be externally biased even if disabled (IOCON.HAEN = 0).

FIGURE 1-2: I²C™ CONTROL BYTE FORMAT

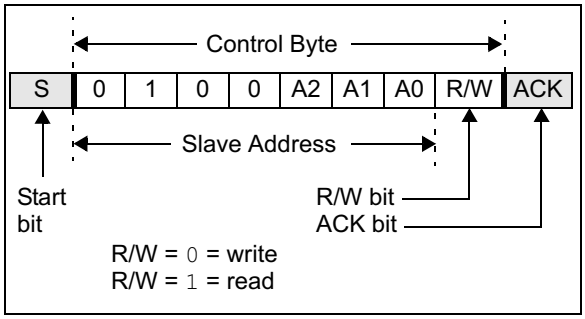

FIGURE 1-3: SPI CONTROL BYTE FORMAT

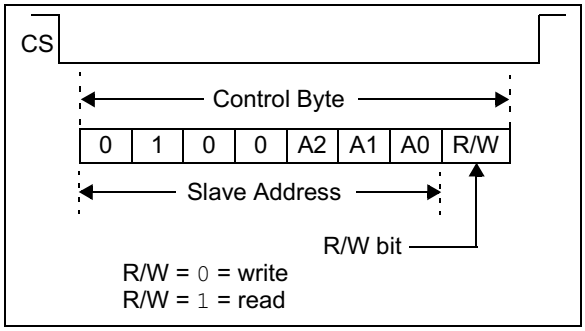

FIGURE 1-4: I²C™ ADDRESSING REGISTERS

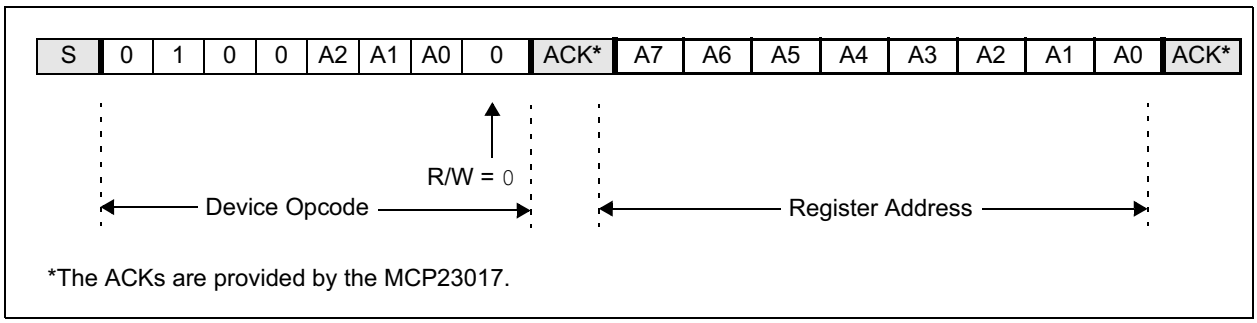

FIGURE 1-5: SPI ADDRESSING REGISTERS

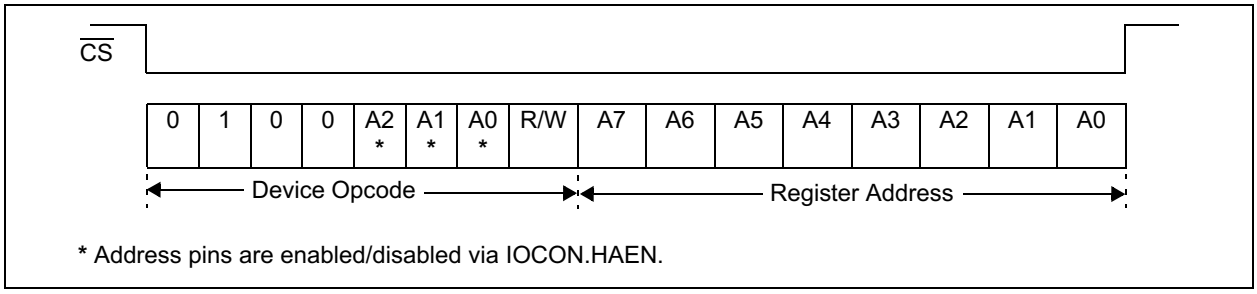

© 2007 Microchip Technology Inc.

1.5 GPIO Port

The GPIO module is a general purpose, 16-bit wide, bidirectional port that is functionally split into two 8-bit wide ports.

The GPIO module contains the data ports (GPIOn), internal pull-up resistors and the output latches (OLATn).

Reading the GPIOn register reads the value on the port. Reading the OLATn register only reads the latches, not the actual value on the port.

Writing to the GPIOn register actually causes a write to the latches (OLATn). Writing to the OLATn register forces the associated output drivers to drive to the level in OLATn. Pins configured as inputs turn off the associated output driver and put it in high-impedance.

TABLE 1-3: SUMMARY OF REGISTERS ASSOCIATED WITH THE GPIO PORTS (BANK = 1)

Register Name	Address (hex)	bit 7	bit 6	bit 5	bit 4	bit 3	bit 2	bit 1	bit 0	POR/RST value
IODIRA	00	IO7	IO6	IO5	IO4	IO3	IO2	IO1	IO0	1111 1111
IPOLA	01	IP7	IP6	IP5	IP4	IP3	IP2	IP1	IP0	0000 0000
GPINTENA	02	GPINT7	GPINT6	GPINT5	GPINT4	GPINT3	GPINT2	GPINT1	GPINT0	0000 0000
GPPUA	06	PU7	PU6	PU5	PU4	PU3	PU2	PU1	PU0	0000 0000
GPIOA	09	GP7	GP6	GP5	GP4	GP3	GP2	GP1	GP0	0000 0000
OLATA	0A	OL7	OL6	OL5	OL4	OL3	OL2	OL1	OL0	0000 0000
IODIRB	10	IO7	IO6	IO5	IO4	IO3	IO2	IO1	IO0	1111 1111
IPOLB	11	IP7	IP6	IP5	IP4	IP3	IP2	IP1	IP0	0000 0000
GPINTENB	12	GPINT7	GPINT6	GPINT5	GPINT4	GPINT3	GPINT2	GPINT1	GPINT0	0000 0000
GPPUB	16	PU7	PU6	PU5	PU4	PU3	PU2	PU1	PU0	0000 0000
GPIOB	19	GP7	GP6	GP5	GP4	GP3	GP2	GP1	GP0	0000 0000
OLATB	1A	OL7	OL6	OL5	OL4	OL3	OL2	OL1	OL0	0000 0000

TABLE 1-4: SUMMARY OF REGISTERS ASSOCIATED WITH THE GPIO PORTS (BANK = 0)

Register Name	Address (hex)	bit 7	bit 6	bit 5	bit 4	bit 3	bit 2	bit 1	bit 0	POR/RST value
IODIRA	00	IO7	IO6	IO5	IO4	IO3	IO2	IO1	IO0	1111 1111
IODIRB	01	IO7	IO6	IO5	IO4	IO3	IO2	IO1	IO0	1111 1111
IPOLA	02	IP7	IP6	IP5	IP4	IP3	IP2	IP1	IP0	0000 0000
IPOLB	03	IP7	IP6	IP5	IP4	IP3	IP2	IP1	IP0	0000 0000
GPINTENA	04	GPINT7	GPINT6	GPINT5	GPINT4	GPINT3	GPINT2	GPINT1	GPINT0	0000 0000
GPINTENB	05	GPINT7	GPINT6	GPINT5	GPINT4	GPINT3	GPINT2	GPINT1	GPINT0	0000 0000
GPPUA	0C	PU7	PU6	PU5	PU4	PU3	PU2	PU1	PU0	0000 0000
GPPUB	0D	PU7	PU6	PU5	PU4	PU3	PU2	PU1	PU0	0000 0000
GPIOA	12	GP7	GP6	GP5	GP4	GP3	GP2	GP1	GP0	0000 0000
GPIOB	13	GP7	GP6	GP5	GP4	GP3	GP2	GP1	GP0	0000 0000
OLATA	14	OL7	OL6	OL5	OL4	OL3	OL2	OL1	OL0	0000 0000
OLATB	15	OL7	OL6	OL5	OL4	OL3	OL2	OL1	OL0	0000 0000

1.6 Configuration and Control Registers

There are 21 registers associated with the MCP23X17, as shown in Table 1-5 and Table 1-6. The two tables show the register mapping with the two BANK bit values. Ten registers are associated with PortA and ten are associated with PortB. One register (IOCON) is shared between the two ports. The PortA registers are identical to the PortB registers, therefore, they will be referred to without differentiating between the port designation (i.e., they will not have the “A” or “B” designator assigned) in the register tables.

TABLE 1-5: CONTROL REGISTER SUMMARY (IOCON.BANK = 1)

Register Name	Address (hex)	bit 7	bit 6	bit 5	bit 4	bit 3	bit 2	bit 1	bit 0	POR/RST value
IODIRA	00	IO7	IO6	IO5	IO4	IO3	IO2	IO1	IO0	1111 1111
IPOLA	01	IP7	IP6	IP5	IP4	IP3	IP2	IP1	IP0	0000 0000
GPINTENA	02	GPINT7	GPINT6	GPINT5	GPINT4	GPINT3	GPINT2	GPINT1	GPINT0	0000 0000
DEFVALA	03	DEF7	DEF6	DEF5	DEF4	DEF3	DEF2	DEF1	DEF0	0000 0000
INTCONA	04	IOC7	IOC6	IOC5	IOC4	IOC3	IOC2	IOC1	IOC0	0000 0000
IOCON	05	BANK	MIRROR	SEQOP	DISSLW	HAEN	ODR	INTPOL	—	0000 0000
GPPUA	06	PU7	PU6	PU5	PU4	PU3	PU2	PU1	PU0	0000 0000
INTFA	07	INT7	INT6	INT5	INT4	INT3	INT2	INT1	INTO	0000 0000
INTCAPA	08	ICP7	ICP6	ICP5	ICP4	ICP3	ICP2	ICP1	ICP0	0000 0000
GPIOA	09	GP7	GP6	GP5	GP4	GP3	GP2	GP1	GP0	0000 0000
OLATA	0A	OL7	OL6	OL5	OL4	OL3	OL2	OL1	OL0	0000 0000
IODIRB	10	IO7	IO6	IO5	IO4	IO3	IO2	IO1	IO0	1111 1111
IPOLB	11	IP7	IP6	IP5	IP4	IP3	IP2	IP1	IP0	0000 0000
GPINTENB	12	GPINT7	GPINT6	GPINT5	GPINT4	GPINT3	GPINT2	GPINT1	GPINT0	0000 0000
DEFVALB	13	DEF7	DEF6	DEF5	DEF4	DEF3	DEF2	DEF1	DEF0	0000 0000
INTCONB	14	IOC7	IOC6	IOC5	IOC4	IOC3	IOC2	IOC1	IOC0	0000 0000
IOCON	15	BANK	MIRROR	SEQOP	DISSLW	HAEN	ODR	INTPOL	—	0000 0000
GPPUB	16	PU7	PU6	PU5	PU4	PU3	PU2	PU1	PU0	0000 0000
INTFB	17	INT7	INT6	INT5	INT4	INT3	INT2	INT1	INTO	0000 0000
INTCAPB	18	ICP7	ICP6	ICP5	ICP4	ICP3	ICP2	ICP1	ICP0	0000 0000
GPIOB	19	GP7	GP6	GP5	GP4	GP3	GP2	GP1	GP0	0000 0000
OLATB	1A	OL7	OL6	OL5	OL4	OL3	OL2	OL1	OL0	0000 0000

© 2007 Microchip Technology Inc.

TABLE 1-6: CONTROL REGISTER SUMMARY (IOCON.BANK = 0)

Register Name	Address (hex)	bit 7	bit 6	bit 5	bit 4	bit 3	bit 2	bit 1	bit 0	POR/RST value
IODIRA	00	IO7	IO6	IO5	IO4	IO3	IO2	IO1	IO0	1111 1111
IODIRB	01	IO7	IO6	IO5	IO4	IO3	IO2	IO1	IO0	1111 1111
IPOLA	02	IP7	IP6	IP5	IP4	IP3	IP2	IP1	IP0	0000 0000
IPOLB	03	IP7	IP6	IP5	IP4	IP3	IP2	IP1	IP0	0000 0000
GPINTENA	04	GPINT7	GPINT6	GPINT5	GPINT4	GPINT3	GPINT2	GPINT1	GPINT0	0000 0000
GPINTENB	05	GPINT7	GPINT6	GPINT5	GPINT4	GPINT3	GPINT2	GPINT1	GPINT0	0000 0000
DEFVALA	06	DEF7	DEF6	DEF5	DEF4	DEF3	DEF2	DEF1	DEF0	0000 0000
DEFVALB	07	DEF7	DEF6	DEF5	DEF4	DEF3	DEF2	DEF1	DEF0	0000 0000
INTCONA	08	IOC7	IOC6	IOC5	IOC4	IOC3	IOC2	IOC1	IOC0	0000 0000
INTCONB	09	IOC7	IOC6	IOC5	IOC4	IOC3	IOC2	IOC1	IOC0	0000 0000
IOCON	0A	BANK	MIRROR	SEQOP	DISSLW	HAEN	ODR	INTPOL	—	0000 0000
IOCON	0B	BANK	MIRROR	SEQOP	DISSLW	HAEN	ODR	INTPOL	—	0000 0000
GPPUA	0C	PU7	PU6	PU5	PU4	PU3	PU2	PU1	PU0	0000 0000
GPPUB	0D	PU7	PU6	PU5	PU4	PU3	PU2	PU1	PU0	0000 0000
INTFA	0E	INT7	INT6	INT5	INT4	INT3	INT2	INT1	INTO	0000 0000
INTFB	0F	INT7	INT6	INT5	INT4	INT3	INT2	INT1	INTO	0000 0000
INTCAPA	10	ICP7	ICP6	ICP5	ICP4	ICP3	ICP2	ICP1	ICP0	0000 0000
INTCAPB	11	ICP7	ICP6	ICP5	ICP4	ICP3	ICP2	ICP1	ICP0	0000 0000
GPIOA	12	GP7	GP6	GP5	GP4	GP3	GP2	GP1	GP0	0000 0000
GPIOB	13	GP7	GP6	GP5	GP4	GP3	GP2	GP1	GP0	0000 0000
OLATA	14	OL7	OL6	OL5	OL4	OL3	OL2	OL1	OL0	0000 0000
OLATB	15	OL7	OL6	OL5	OL4	OL3	OL2	OL1	OL0	0000 0000

© 2007 Microchip Technology Inc.

1.6.1 I/O DIRECTION REGISTER

Controls the direction of the data I/O.

When a bit is set, the corresponding pin becomes an input. When a bit is clear, the corresponding pin becomes an output.

REGISTER 1-1: IODIR – I/O DIRECTION REGISTER (ADDR 0x00)

R/W-1	R/W-1	R/W-1	R/W-1	R/W-1	R/W-1	R/W-1	R/W-1
IO7	IO6	IO5	IO4	IO3	IO2	IO1	IO0
bit 7							bit 0

Legend:			
R = Readable bit	W = Writable bit	U = Unimplemented bit, read as ‘0’	
-n = Value at POR	‘1’ = Bit is set	‘0’ = Bit is cleared	x = Bit is unknown

bit 7-0 **IO7:IO0:** These bits control the direction of data I/O <7:0>

1 = Pin is configured as an input.

0 = Pin is configured as an output.

© 2007 Microchip Technology Inc.

1.6.2 INPUT POLARITY REGISTER

This register allows the user to configure the polarity on the corresponding GPIO port bits.

If a bit is set, the corresponding GPIO register bit will reflect the inverted value on the pin.

REGISTER 1-2: IPOL – INPUT POLARITY PORT REGISTER (ADDR 0x01)

R/W-0	R/W-0	R/W-0	R/W-0	R/W-0	R/W-0	R/W-0	R/W-0
IP7	IP6	IP5	IP4	IP3	IP2	IP1	IP0
bit 7							bit 0

Legend:			
R = Readable bit	W = Writable bit	U = Unimplemented bit, read as ‘0’	
-n = Value at POR	‘1’ = Bit is set	‘0’ = Bit is cleared	x = Bit is unknown

bit 7-0 **IP7:IP0:** These bits control the polarity inversion of the input pins <7:0>

1 = GPIO register bit will reflect the opposite logic state of the input pin.

0 = GPIO register bit will reflect the same logic state of the input pin.

1.6.3 INTERRUPT-ON-CHANGE CONTROL REGISTER

The GPINTEN register controls the interrupt-on-change feature for each pin.

If a bit is set, the corresponding pin is enabled for interrupt-on-change. The DEFVAL and INTCON registers must also be configured if any pins are enabled for interrupt-on-change.

REGISTER 1-3: GPINTEN – INTERRUPT-ON-CHANGE PINS (ADDR 0x02)

R/W-0	R/W-0	R/W-0	R/W-0	R/W-0	R/W-0	R/W-0	R/W-0
GPINT7	GPINT6	GPINT5	GPINT4	GPINT3	GPINT2	GPINT1	GPINT0
bit 7							bit 0

Legend:			
R = Readable bit	W = Writable bit	U = Unimplemented bit, read as ‘0’	
-n = Value at POR	‘1’ = Bit is set	‘0’ = Bit is cleared	x = Bit is unknown

bit 7-0 **GPINT7:GPINT0:** General purpose I/O interrupt-on-change bits <7:0>

`1` = Enable GPIO input pin for interrupt-on-change event.
`0` = Disable GPIO input pin for interrupt-on-change event.

Refer to INTCON and GPINTEN.

© 2007 Microchip Technology Inc.

1.6.4 DEFAULT COMPARE REGISTER FOR INTERRUPT-ON-CHANGE

The default comparison value is configured in the DEFVAL register. If enabled (via GPINTEN and INTCON) to compare against the DEFVAL register, an opposite value on the associated pin will cause an interrupt to occur.

REGISTER 1-4: DEFVAL – DEFAULT VALUE REGISTER (ADDR 0x03)

R/W-0	R/W-0	R/W-0	R/W-0	R/W-0	R/W-0	R/W-0	R/W-0
DEF7	DEF6	DEF5	DEF4	DEF3	DEF2	DEF1	DEF0
bit 7							bit 0

Legend:			
R = Readable bit	W = Writable bit	U = Unimplemented bit, read as ‘0’	
-n = Value at POR	‘1’ = Bit is set	‘0’ = Bit is cleared	x = Bit is unknown

bit 7-0 **DEF7:DEF0:** These bits set the compare value for pins configured for interrupt-on-change from defaults <7:0>. Refer to INTCON.
If the associated pin level is the opposite from the register bit, an interrupt occurs.

Refer to INTCON and GPINTEN.

1.6.5 INTERRUPT CONTROL REGISTER

The INTCON register controls how the associated pin value is compared for the interrupt-on-change feature. If a bit is set, the corresponding I/O pin is compared against the associated bit in the DEFVAL register. If a bit value is clear, the corresponding I/O pin is compared against the previous value.

REGISTER 1-5: INTCON – INTERRUPT-ON-CHANGE CONTROL REGISTER (ADDR 0x04)

R/W-0	R/W-0	R/W-0	R/W-0	R/W-0	R/W-0	R/W-0	R/W-0
IOC7	IOC6	IOC5	IOC4	IOC3	IOC2	IOC1	IOC0
bit 7							bit 0

Legend:			
R = Readable bit	W = Writable bit	U = Unimplemented bit, read as ‘0’	
-n = Value at POR	‘1’ = Bit is set	‘0’ = Bit is cleared	x = Bit is unknown

bit 7-0 **IOC7:IOC0:** These bits control how the associated pin value is compared for interrupt-on-change <7:0>

1 = Controls how the associated pin value is compared for interrupt-on-change.
0 = Pin value is compared against the previous pin value.

Refer to INTCON and GPINTEN.

© 2007 Microchip Technology Inc.

1.6.6 CONFIGURATION REGISTER

The IOCON register contains several bits for configuring the device:

The **BANK** bit changes how the registers are mapped (see Table 1-5 and Table 1-6 for more details).

- If BANK = 1, the registers associated with each port are segregated. Registers associated with PORTA are mapped from address 00h - 0Ah and registers associated with PORTB are mapped from 10h - 1Ah.
- If BANK = 0, the A/B registers are paired. For example, IODIRA is mapped to address 00h and IODIRB is mapped to the next address (address 01h). The mapping for all registers is from 00h - 15h.

It is important to take care when changing the BANK bit as the address mapping changes after the byte is clocked into the device. The address pointer may point to an invalid location after the bit is modified.

For example, if the device is configured to automatically increment its internal Address Pointer, the following scenario would occur:

- BANK = 0
- Write 80h to address 0Ah (IOCON) to set the BANK bit
- Once the write completes, the internal address now points to 0Bh which is an invalid address when the BANK bit is set.

For this reason, it is advised to only perform byte writes to this register when changing the BANK bit.

The **MIRROR** bit controls how the INTA and INTB pins function with respect to each other.

- When MIRROR = 1, the INTn pins are functionally OR'ed so that an interrupt on either port will cause both pins to activate.
- When MIRROR = 0, the INT pins are separated. Interrupt conditions on a port will cause its respective INT pin to activate.

The Sequential Operation (**SEQOP**) controls the incrementing function of the Address Pointer. If the address pointer is disabled, the Address Pointer does not automatically increment after each byte is clocked during a serial transfer. This feature is useful when it is desired to continuously poll (read) or modify (write) a register.

The Slew Rate (**DISSLW**) bit controls the slew rate function on the SDA pin. If enabled, the SDA slew rate will be controlled when driving from a high to low.

The Hardware Address Enable (**HAEN**) bit enables/disables hardware addressing on the MCP23S17 only. The address pins (A2, A1 and A0) must be externally biased, regardless of the HAEN bit value.

If enabled (HAEN = 1), the device's hardware address matches the address pins.

If disabled (HAEN = 0), the device's hardware address is A2 = A1 = A0 = 0.

The Open-Drain (**ODR**) control bit enables/disables the INT pin for open-drain configuration. Erasing this bit overrides the INTPOL bit.

The Interrupt Polarity (**INTPOL**) sets the polarity of the INT pin. This bit is functional only when the ODR bit is cleared, configuring the INT pin as active push-pull.

REGISTER 1-6: IOCON – I/O EXPANDER CONFIGURATION REGISTER (ADDR 0x05)

R/W-0	R/W-0	R/W-0	R/W-0	R/W-0	R/W-0	R/W-0	U-0
BANK	MIRROR	SEQOP	DISSLW	HAEN	ODR	INTPOL	—
bit 7							bit 0

Legend:			
R = Readable bit	W = Writable bit	U = Unimplemented bit, read as ‘0’	
-n = Value at POR	‘1’ = Bit is set	‘0’ = Bit is cleared	x = Bit is unknown

bit 7 **BANK:** Controls how the registers are addressed
1 = The registers associated with each port are separated into different banks
0 = The registers are in the same bank (addresses are sequential)

bit 6 **MIRROR:** INT Pins Mirror bit
1 = The INT pins are internally connected
0 = The INT pins are not connected. INTA is associated with PortA and INTB is associated with PortB

bit 5 **SEQOP:** Sequential Operation mode bit.
1 = Sequential operation disabled, address pointer does not increment.
0 = Sequential operation enabled, address pointer increments.

bit 4 **DISSLW:** Slew Rate control bit for SDA output.
1 = Slew rate disabled.
0 = Slew rate enabled.

bit 3 **HAEN:** Hardware Address Enable bit (MCP23S17 only).
Address pins are always enabled on MCP23017.
1 = Enables the MCP23S17 address pins.
0 = Disables the MCP23S17 address pins.

bit 2 **ODR:** This bit configures the INT pin as an open-drain output.
1 = Open-drain output (overrides the INTPOL bit).
0 = Active driver output (INTPOL bit sets the polarity).

bit 1 **INTPOL:** This bit sets the polarity of the INT output pin.
1 = Active-high.
0 = Active-low.

bit 0 **Unimplemented:** Read as ‘0’.

© 2007 Microchip Technology Inc.

1.6.7 PULL-UP RESISTOR CONFIGURATION REGISTER

The GPPU register controls the pull-up resistors for the port pins. If a bit is set and the corresponding pin is configured as an input, the corresponding port pin is internally pulled up with a 100 kΩ resistor.

REGISTER 1-7: GPPU – GPIO PULL-UP RESISTOR REGISTER (ADDR 0x06)

R/W-0	R/W-0	R/W-0	R/W-0	R/W-0	R/W-0	R/W-0	R/W-0
PU7	PU6	PU5	PU4	PU3	PU2	PU1	PU0
bit 7							bit 0

Legend:			
R = Readable bit	W = Writable bit	U = Unimplemented bit, read as ‘0’	
-n = Value at POR	‘1’ = Bit is set	‘0’ = Bit is cleared	x = Bit is unknown

bit 7-0 **PU7:PU0:** These bits control the weak pull-up resistors on each pin (when configured as an input) <7:0>.

1 = Pull-up enabled.
0 = Pull-up disabled.

1.6.8 INTERRUPT FLAG REGISTER

The INTF register reflects the interrupt condition on the port pins of any pin that is enabled for interrupts via the GPINTEN register. A ‘set’ bit indicates that the associated pin caused the interrupt.

This register is ‘read-only’. Writes to this register will be ignored.

REGISTER 1-8: INTF – INTERRUPT FLAG REGISTER (ADDR 0x07)

R-0	R-0	R-0	R-0	R-0	R-0	R-0	R-0
INT7	INT6	INT5	INT4	INT3	INT2	INT1	INT0
bit 7							bit 0

Legend:			
R = Readable bit	W = Writable bit	U = Unimplemented bit, read as ‘0’	
-n = Value at POR	‘1’ = Bit is set	‘0’ = Bit is cleared	x = Bit is unknown

bit 7-0 **INT7:INT0:** These bits reflect the interrupt condition on the port. Will reflect the change only if interrupts are enabled (GPINTEN) <7:0>.

`1` = Pin caused interrupt.
`0` = Interrupt not pending.

© 2007 Microchip Technology Inc.

1.6.9 INTERRUPT CAPTURE REGISTER

The INTCAP register captures the GPIO port value at the time the interrupt occurred. The register is 'read only' and is updated only when an interrupt occurs. The register will remain unchanged until the interrupt is cleared via a read of INTCAP or GPIO.

REGISTER 1-9: INTCAP – INTERRUPT CAPTURED VALUE FOR PORT REGISTER (ADDR 0x08)

R-x	R-x	R-x	R-x	R-x	R-x	R-x	R-x
ICP7	ICP6	ICP5	ICP4	ICP3	ICP2	ICP1	ICP0
bit 7							bit 0

Legend:			
R = Readable bit	W = Writable bit	U = Unimplemented bit, read as '0'	
-n = Value at POR	'1' = Bit is set	'0' = Bit is cleared	x = Bit is unknown

bit 7-0 **ICP7:ICP0:** These bits reflect the logic level on the port pins at the time of interrupt due to pin change <7:0>

1 = Logic-high.
0 = Logic-low.

1.6.10 PORT REGISTER

The GPIO register reflects the value on the port. Reading from this register reads the port. Writing to this register modifies the Output Latch (OLAT) register.

REGISTER 1-10: GPIO – GENERAL PURPOSE I/O PORT REGISTER (ADDR 0x09)

R/W-0	R/W-0	R/W-0	R/W-0	R/W-0	R/W-0	R/W-0	R/W-0
GP7	GP6	GP5	GP4	GP3	GP2	GP1	GP0
bit 7							bit 0

Legend:			
R = Readable bit	W = Writable bit	U = Unimplemented bit, read as ‘0’	
-n = Value at POR	‘1’ = Bit is set	‘0’ = Bit is cleared	x = Bit is unknown

bit 7-0 **GP7:GP0:** These bits reflect the logic level on the pins <7:0>
1 = Logic-high.
0 = Logic-low.

© 2007 Microchip Technology Inc.

1.6.11 OUTPUT LATCH REGISTER (OLAT)

The OLAT register provides access to the output latches. A read from this register results in a read of the OLAT and not the port itself. A write to this register modifies the output latches that modifies the pins configured as outputs.

REGISTER 1-11: OLAT – OUTPUT LATCH REGISTER 0 (ADDR 0x0A)

R/W-0	R/W-0	R/W-0	R/W-0	R/W-0	R/W-0	R/W-0	R/W-0
OL7	OL6	OL5	OL4	OL3	OL2	OL1	OL0
bit 7							bit 0

Legend:			
R = Readable bit	W = Writable bit	U = Unimplemented bit, read as ‘0’	
-n = Value at POR	‘1’ = Bit is set	‘0’ = Bit is cleared	x = Bit is unknown

bit 7-0 **OL7:OL0:** These bits reflect the logic level on the output latch <7:0>

1 = Logic-high.
0 = Logic-low.

1.7 Interrupt Logic

If enabled, the MCP23X17 activates the INTn interrupt output when one of the port pins changes state or when a pin does not match the preconfigured default. Each pin is individually configurable as follows:

- Enable/disable interrupt via GPINTEN
- Can interrupt on either pin change or change from default as configured in DEFVAL

Both conditions are referred to as Interrupt-on-Change (IOC).

The interrupt control module uses the following registers/bits:

- IOCON.MIRROR – controls if the two interrupt pins mirror each other
- GPINTEN – Interrupt enable register
- INTCON – Controls the source for the IOC
- DEFVAL – Contains the register default for IOC operation

1.7.1 INTA AND INTB

There are two interrupt pins: INTA and INTB. By default, INTA is associated with GPAn pins (PortA) and INTB is associated with GPBn pins (PortB). Each port has an independent signal which is cleared if its associated GPIO or INTCAP register is read.

1.7.1.1 Mirroring the INT pins

Additionally, the INTn pins can be configured to mirror each other so that any interrupt will cause both pins to go active. This is controlled via IOCON.MIRROR.

If IOCON.MIRROR = `0`, the internal signals are routed independently to the INTA and INTB pads.

If IOCON.MIRROR = `1`, the internal signals are OR'ed together and routed to the INTn pads. In this case, the interrupt will only be cleared if the associated GPIO or INTCAP is read (see Table 1-7).

TABLE 1-7: INTERRUPT OPERATION (IOCON.MIRROR = `1`)

Interrupt Condition	Read Portn *	Interupt Result
GPIOA	PortA	Clear
	PortB	Unchanged
GPIOB	PortA	Unchanged
	PortB	Clear
GPIOA and GPIOB	PortA	Unchanged
	PortB	Unchanged
	Both PortA and PortB	Clear

* Port n = GPIOn or INTCAPn

1.7.2 IOC FROM PIN CHANGE

If enabled, the MCP23X17 will generate an interrupt if a mismatch condition exists between the current port value and the previous port value. Only IOC enabled pins will be compared. Refer to Register 1-3 and Register 1-5.

1.7.3 IOC FROM REGISTER DEFAULT

If enabled, the MCP23X17 will generate an interrupt if a mismatch occurs between the DEFVAL register and the port. Only IOC enabled pins will be compared. Refer to Register 1-3, Register 1-5 and Register 1-4.

1.7.4 INTERRUPT OPERATION

The INTn interrupt output can be configured as active-low, active-high or open-drain via the IOCON register.

Only those pins that are configured as an input (IODIR register) with Interrupt-On-Change (IOC) enabled (IOINTEN register) can cause an interrupt. Pins defined as an output have no effect on the interrupt output pin.

Input change activity on a port input pin that is enabled for IOC will generate an internal device interrupt and the device will capture the value of the port and copy it into INTCAP. The interrupt will remain active until the INTCAP or GPIO register is read. Writing to these registers will not affect the interrupt. The interrupt condition will be cleared after the LSb of the data is clocked out during a read command of GPIO or INTCAP.

The first interrupt event will cause the port contents to be copied into the INTCAP register. Subsequent interrupt conditions on the port will not cause an interrupt to occur as long as the interrupt is not cleared by a read of INTCAP or GPIO.

Note: The value in INTCAP can be lost if GPIO is read before INTCAP while another IOC is pending. After reading GPIO, the interrupt will clear and then set due to the pending IOC, causing the INTCAP register to update.

© 2007 Microchip Technology Inc.

1.7.5 INTERRUPT CONDITIONS

There are two possible configurations that cause interrupts (configured via INTCON):

1. Pins configured for **interrupt-on-pin change** will cause an interrupt to occur if a pin changes to the opposite state. The default state is reset after an interrupt occurs and after clearing the interrupt condition (i.e., after reading GPIO or INTCAP). For example, an interrupt occurs by an input changing from '1' to '0'. The new initial state for the pin is a logic 0 after the interrupt is cleared.
2. Pins configured for **interrupt-on-change from register value** will cause an interrupt to occur if the corresponding input pin differs from the register bit. The interrupt condition will remain as long as the condition exists, regardless if the INTCAP or GPIO is read.

See Figure 1-6 and Figure 1-7 for more information on interrupt operations.

FIGURE 1-6: INTERRUPT-ON-PIN CHANGE

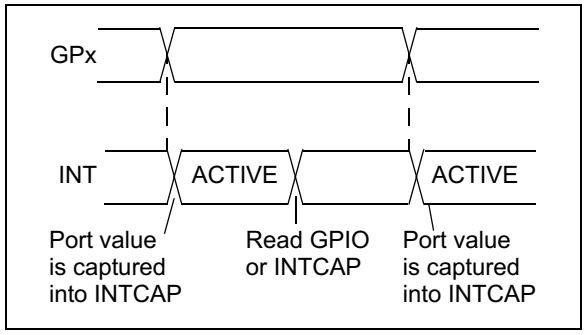

FIGURE 1-7: INTERRUPT-ON-CHANGE FROM REGISTER DEFAULT

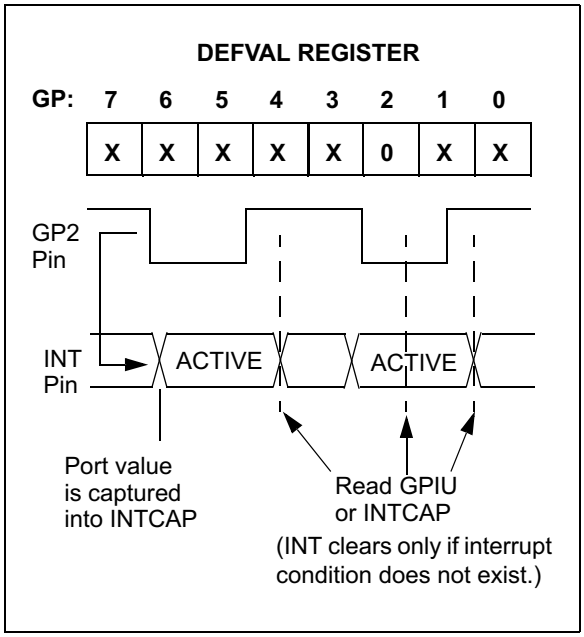

NOTES:

© 2007 Microchip Technology Inc.

2.0 ELECTRICAL CHARACTERISTICS

Absolute Maximum Ratings †

Ambient temperature under bias ..... -40°C to +125°C

Storage temperature ..... -65°C to +150°C

Voltage on V_{DD} with respect to V_{SS} ..... -0.3V to +5.5V

Voltage on all other pins with respect to V_{SS} (except V_{DD}) ..... -0.6V to (V_{DD} + 0.6V)

Total power dissipation (**Note**) ..... 700 mW

Maximum current out of V_{SS} pin ..... 150 mA

Maximum current into V_{DD} pin ..... 125 mA

Input clamp current, I_{IK} (V_I < 0 or V_I > V_{DD}) ..... ±20 mA

Output clamp current, I_{OK} (V_O < 0 or V_O > V_{DD}) ..... ±20 mA

Maximum output current sunk by any output pin ..... 25 mA

Maximum output current sourced by any output pin ..... 25 mA

Note: Power dissipation is calculated as follows:
$P_{DIS} = V_{DD} \times \{I_{DD} - \sum I_{OH}\} + \sum \{(V_{DD} - V_{OH}) \times I_{OH}\} + \sum(V_{OL} \times I_{OL})$

† **NOTE:** The graphs and tables provided following this note are a statistical summary based on a limited number of samples and are provided for informational purposes only. The performance characteristics listed herein are not tested or guaranteed. In some graphs or tables, the data presented may be outside the specified operating range (e.g., outside specified power supply range) and therefore outside the warranted range.

2.1 DC Characteristics

DC Characteristics		Operating Conditions (unless otherwise indicated): 1.8V ≤ VDD ≤ 5.5V at -40°C ≤ TA ≤ +85°C (I-Temp) 4.5V ≤ VDD ≤ 5.5V at -40°C ≤ TA ≤ +125°C (E-Temp) **(Note 1)**					
Param No.	**Characteristic**	**Sym**	**Min**	**Typ (Note 1(**	**Max**	**Units**	**Conditions**
D001	Supply Voltage	VDD	1.8	—	5.5	V	
D002	VDD Start Voltage to Ensure Power-on Reset	VPOR	—	VSS	—	V	
D003	VDD Rise Rate to Ensure Power-on Reset	SVDD	0.05	—	—	V/ms	Design guidance only. Not tested.
D004	Supply Current	IDD	—	—	1	mA	SCL/SCK = 1 MHz
D005	Standby current	IDDS	—	—	1	µA	
			—	—	3	µA	4.5V-5.5V @ +125°C **(Note 1)**
	Input Low Voltage						
D030	A0, A1 (TTL buffer)	VIL	VSS	—	0.15 VDD	V	
D031	$\overline{CS}$, GPIO, SCL/SCK, SDA, A2, $\overline{RESET}$ (Schmitt Trigger)		VSS	—	0.2 VDD	V	
	Input High Voltage						
D040	A0, A1 (TTL buffer)	VIH	0.25 VDD + 0.8	—	VDD	V	
D041	$\overline{CS}$, GPIO, SCL/SCK, SDA, A2, $\overline{RESET}$ (Schmitt Trigger)		0.8 VDD	—	VDD	V	For entire VDD range
	Input Leakage Current						
D060	I/O port pins	IIL	—	—	±1	µA	VSS ≤ VPIN ≤ VDD
	Output Leakage Current						
D065	I/O port pins	ILO	—	—	±1	µA	VSS ≤ VPIN ≤ VDD
D070	GPIO weak pull-up current	IPU	40	75	115	µA	VDD = 5V, GP Pins = VSS –40°C ≤ TA ≤ +85°C
	Output Low-Voltage						
D080	GPIO	VOL	—	—	0.6	V	IOL = 8.0 mA, VDD = 4.5V
	INT		—	—	0.6	V	IOL = 1.6 mA, VDD = 4.5V
	SO, SDA		—	—	0.6	V	IOL = 3.0 mA, VDD = 1.8V
	SDA		—	—	0.8	V	IOL = 3.0 mA, VDD = 4.5V
	Output High-Voltage						
D090	GPIO, INT, SO	VOH	VDD – 0.7	—	—	V	IOH = -3.0 mA, VDD = 4.5V
			VDD – 0.7	—	—		IOH = -400 µA, VDD = 1.8V
	Capacitive Loading Specs on Output Pins						
D101	GPIO, SO, INT	CIO	—	—	50	pF	
D102	SDA	CB	—	—	400	pF	

Note 1: This parameter is characterized, not 100% tested.

© 2007 Microchip Technology Inc.

FIGURE 2-1: LOAD CONDITIONS FOR DEVICE TIMING SPECIFICATIONS

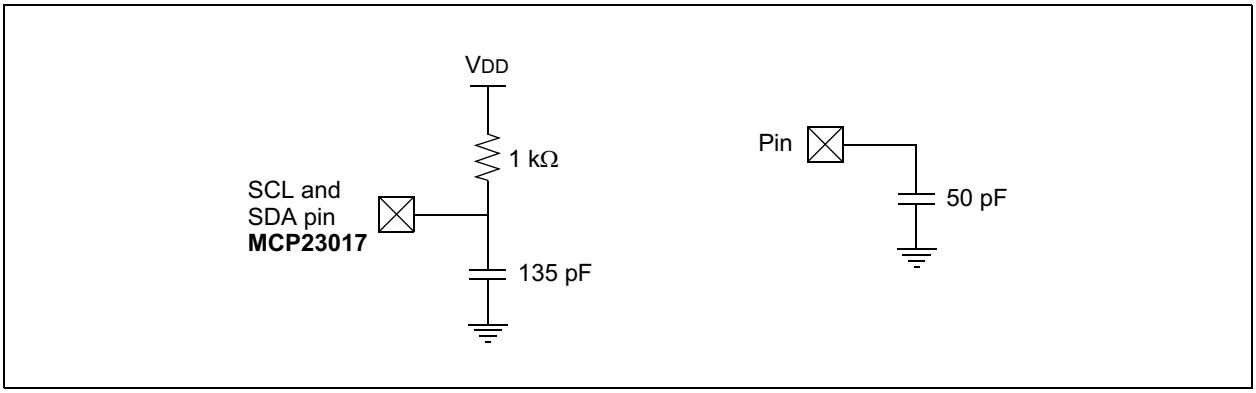

FIGURE 2-2: RESET AND DEVICE RESET TIMER TIMING

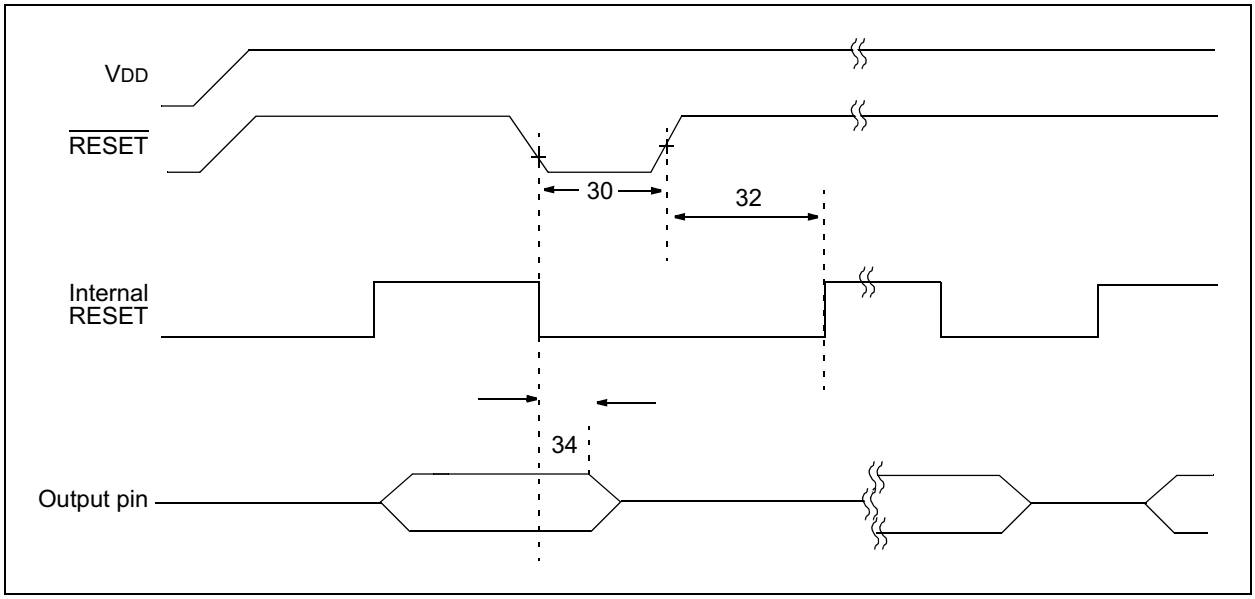

TABLE 2-1: DEVICE RESET SPECIFICATIONS

AC Characteristics		Operating Conditions (unless otherwise indicated): 1.8V ≤ VDD ≤ 5.5V at -40°C ≤ TA ≤ +85°C (I-Temp) 4.5V ≤ VDD ≤ 5.5V at -40°C ≤ TA ≤ +125°C (E-Temp) **(Note 1)**					
Param No.	**Characteristic**	**Sym**	**Min**	**Typ(1)**	**Max**	**Units**	**Conditions**
30	$\overline{\text{RESET}}$ Pulse Width (Low)	TRSTL	1	—	—	µs	
32	Device Active After Reset high	THLD	—	0	—	ns	VDD = 5.0V
34	Output High-Impedance From $\overline{\text{RESET}}$ Low	TIOZ	—	—	1	µs	

Note 1: This parameter is characterized, not 100% tested.

FIGURE 2-3: I²C™ BUS START/STOP BITS TIMING

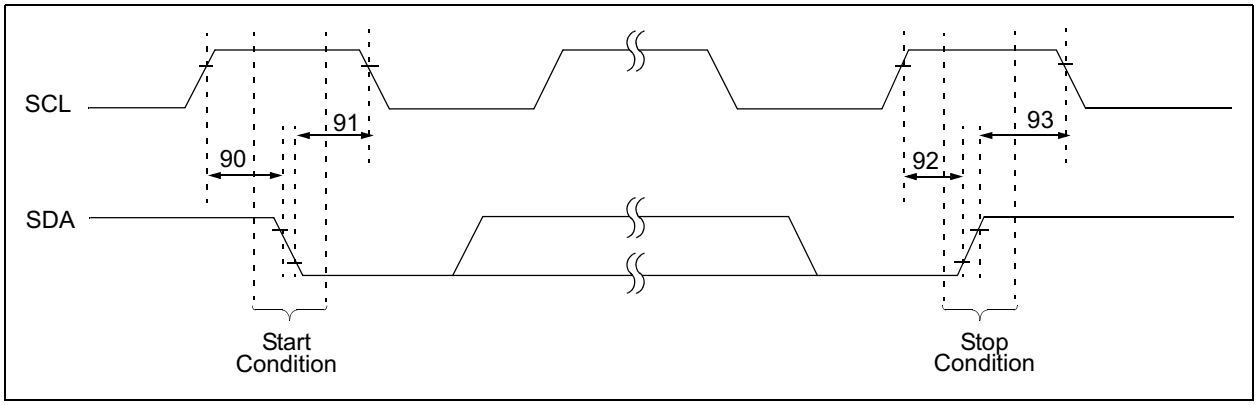

FIGURE 2-4: I²C™ BUS DATA TIMING

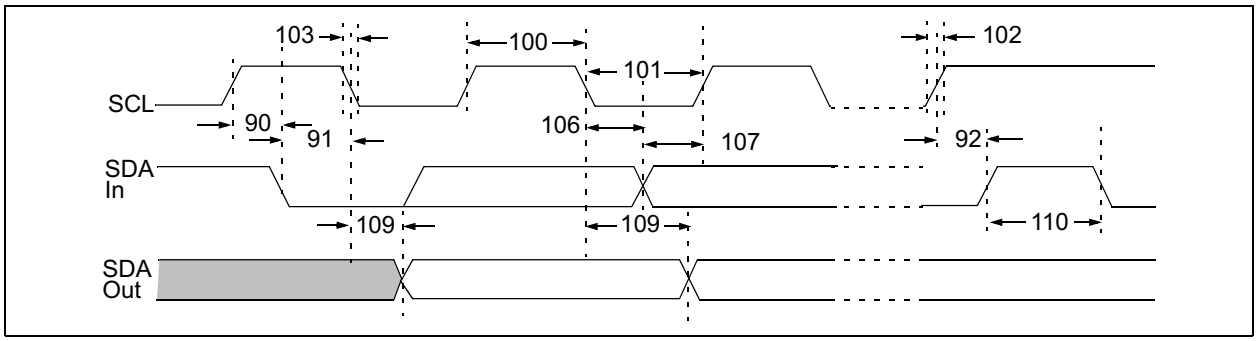

© 2007 Microchip Technology Inc.

TABLE 2-2: I²C™ BUS DATA REQUIREMENTS

I²C™ AC Characteristics		Operating Conditions (unless otherwise indicated): 1.8V ≤ VDD ≤ 5.5V at -40°C ≤ TA ≤ +85°C (I-Temp) 4.5V ≤ VDD ≤ 5.5V at -40°C ≤ TA ≤ +125°C (E-Temp) **(Note 1)** RPU (SCL, SDA) = 1 kΩ, CL (SCL, SDA) = 135 pF					
Param No.	**Characteristic**	**Sym**	**Min**	**Typ**	**Max**	**Units**	**Conditions**
100	Clock High Time:	THIGH					
	100 kHz mode		4.0	—	—	μs	1.8V–5.5V (I-Temp)
	400 kHz mode		0.6	—	—	μs	2.7V–5.5V (I-Temp)
	1.7 MHz mode		0.12	—	—	μs	4.5V–5.5V (E-Temp)
101	Clock Low Time:	TLOW					
	100 kHz mode		4.7	—	—	μs	1.8V–5.5V (I-Temp)
	400 kHz mode		1.3	—	—	μs	2.7V–5.5V (I-Temp)
	1.7 MHz mode		0.32	—	—	μs	4.5V–5.5V (E-Temp)
102	SDA and SCL Rise Time:	TR **(Note 1)**					
	100 kHz mode		—	—	1000	ns	1.8V–5.5V (I-Temp)
	400 kHz mode		20 + 0.1 CB(2)	—	300	ns	2.7V–5.5V (I-Temp)
	1.7 MHz mode		20	—	160	ns	4.5V–5.5V (E-Temp)
103	SDA and SCL Fall Time:	TF **(Note 1)**					
	100 kHz mode		—	—	300	ns	1.8V–5.5V (I-Temp)
	400 kHz mode		20 + 0.1 CB(2)	—	300	ns	2.7V–5.5V (I-Temp)
	1.7 MHz mode		20	—	80	ns	4.5V–5.5V (E-Temp)
90	START Condition Setup Time:	TSU:STA					
	100 kHz mode		4.7	—	—	μs	1.8V–5.5V (I-Temp)
	400 kHz mode		0.6	—	—	μs	2.7V–5.5V (I-Temp)
	1.7 MHz mode		0.16	—	—	μs	4.5V–5.5V (E-Temp)
91	START Condition Hold Time:	THD:STA					
	100 kHz mode		4.0	—	—	μs	1.8V–5.5V (I-Temp)
	400 kHz mode		0.6	—	—	μs	2.7V–5.5V (I-Temp)
	1.7 MHz mode		0.16	—	—	μs	4.5V–5.5V (E-Temp)
106	Data Input Hold Time:	THD:DAT					
	100 kHz mode		0	—	3.45	μs	1.8V–5.5V (I-Temp)
	400 kHz mode		0	—	0.9	μs	2.7V–5.5V (I-Temp)
	1.7 MHz mode		0	—	0.15	μs	4.5V–5.5V (E-Temp)
107	Data Input Setup Time:	TSU:DAT					
	100 kHz mode		250	—	—	ns	1.8V–5.5V (I-Temp)
	400 kHz mode		100	—	—	ns	2.7V–5.5V (I-Temp)
	1.7 MHz mode		0.01	—	—	μs	4.5V–5.5V (E-Temp)
92	Stop Condition Setup Time:	TSU:STO					
	100 kHz mode		4.0	—	—	μs	1.8V–5.5V (I-Temp)
	400 kHz mode		0.6	—	—	μs	2.7V–5.5V (I-Temp)
	1.7 MHz mode		0.16	—	—	μs	4.5V–5.5V (E-Temp)

Note 1: This parameter is characterized, not 100% tested.

2: CB is specified to be from 10 to 400 pF.

TABLE 2-2: I²C™ BUS DATA REQUIREMENTS (CONTINUED)

I²C™ AC Characteristics			Operating Conditions (unless otherwise indicated): 1.8V ≤ VDD ≤ 5.5V at -40°C ≤ TA ≤ +85°C (I-Temp) 4.5V ≤ VDD ≤ 5.5V at -40°C ≤ TA ≤ +125°C (E-Temp) **(Note 1)** RPU (SCL, SDA) = 1 kΩ, CL (SCL, SDA) = 135 pF				
Param No.	**Characteristic**	**Sym**	**Min**	**Typ**	**Max**	**Units**	**Conditions**
109	Output Valid From Clock:	TAA					
	100 kHz mode		—	—	3.45	μs	1.8V–5.5V (I-Temp)
	400 kHz mode		—	—	0.9	μs	2.7V–5.5V (I-Temp)
	1.7 MHz mode		—	—	0.18	μs	4.5V–5.5V (E-Temp)
110	Bus Free Time:	TBUF					
	100 kHz mode		4.7	—	—	μs	1.8V–5.5V (I-Temp)
	400 kHz mode		1.3	—	—	μs	2.7V–5.5V (I-Temp)
	1.7 MHz mode		N/A	—	N/A	μs	4.5V – 5.5V (E-Temp)
	Bus Capacitive Loading:	CB					
	100 kHz and 400 kHz		—	—	400	pF	**Note 1**
	1.7 MHz		—	—	100	pF	**Note 1**
	Input Filter Spike Suppression (SDA and SCL)	TSP					
	100 kHz and 400 kHz		—	—	50	ns	
	1.7 MHz		—	—	10	ns	Spike suppression off

Note 1: This parameter is characterized, not 100% tested.
2: CB is specified to be from 10 to 400 pF.

FIGURE 2-5: SPI INPUT TIMING

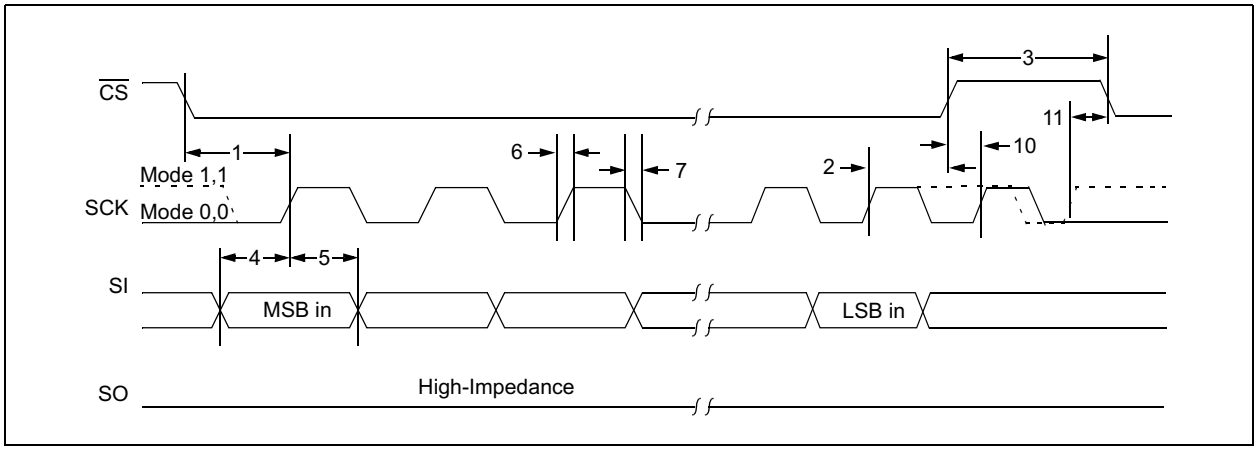

© 2007 Microchip Technology Inc.

FIGURE 2-6: SPI OUTPUT TIMING

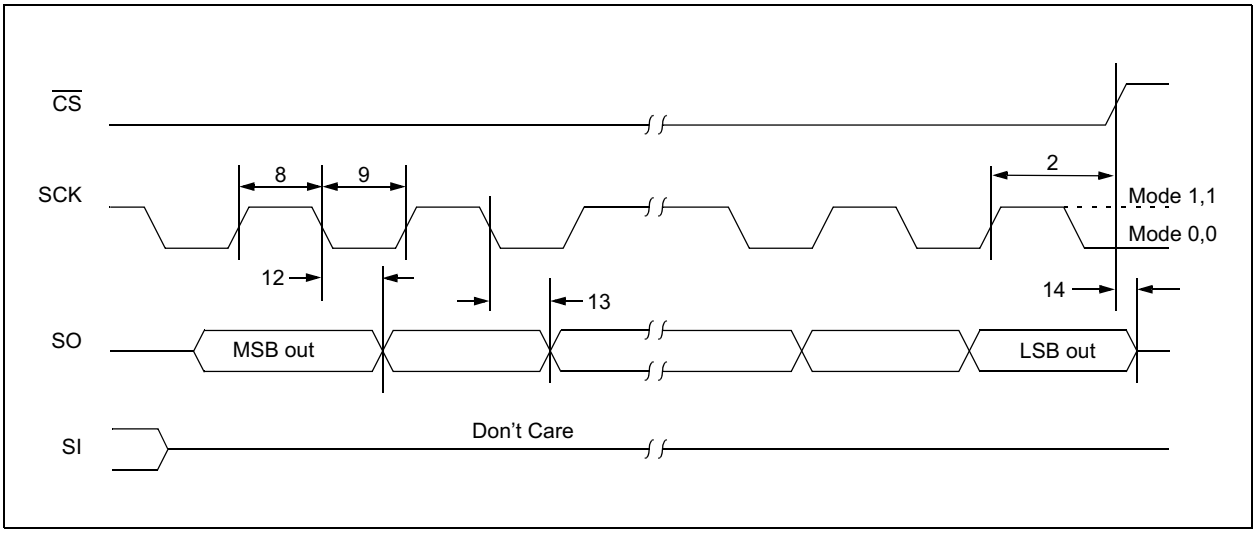

TABLE 2-3: SPI INTERFACE AC CHARACTERISTICS

SPI Interface AC Characteristics		Operating Conditions (unless otherwise indicated): 1.8V ≤ VDD ≤ 5.5V at -40°C ≤ TA ≤ +85°C (I-Temp) 4.5V ≤ VDD ≤ 5.5V at -40°C ≤ TA ≤ +125°C (E-Temp) **(Note 1)**					
Param No.	**Characteristic**	**Sym**	**Min**	**Typ**	**Max**	**Units**	**Conditions**
	Clock Frequency	FCLK	—	—	5	MHz	1.8V–5.5V (I-Temp)
			—	—	10	MHz	2.7V–5.5V (I-Temp)
			—	—	10	MHz	4.5V–5.5V (E-Temp)
1	$\overline{CS}$ Setup Time	TCSS	50	—	—	ns	
2	$\overline{CS}$ Hold Time	TCSH	100	—	—	ns	1.8V–5.5V (I-Temp)
			50	—	—	ns	2.7V–5.5V (I-Temp)
			50	—	—	ns	4.5V–5.5V (E-Temp)
3	$\overline{CS}$ Disable Time	TCSD	100	—	—	ns	1.8V–5.5V (I-Temp)
			50	—	—	ns	2.7V–5.5V (I-Temp)
			50	—	—	ns	4.5V–5.5V (E-Temp)
4	Data Setup Time	TSU	20	—	—	ns	1.8V–5.5V (I-Temp)
			10	—	—	ns	2.7V–5.5V (I-Temp)
			10	—	—	ns	4.5V–5.5V (E-Temp)
5	Data Hold Time	THD	20	—	—	ns	1.8V–5.5V (I-Temp)
			10	—	—	ns	2.7V–5.5V (I-Temp)
			10	—	—	ns	4.5V–5.5V (E-Temp)
6	CLK Rise Time	TR	—	—	2	µs	**Note 1**
7	CLK Fall Time	TF	—	—	2	µs	**Note 1**
8	Clock High Time	THI	90	—	—	ns	1.8V–5.5V (I-Temp)
			45	—	—	ns	2.7V–5.5V (I-Temp)
			45	—	—	ns	4.5V–5.5V (E-Temp)

Note 1: This parameter is characterized, not 100% tested.

TABLE 2-3: SPI INTERFACE AC CHARACTERISTICS (CONTINUED)

SPI Interface AC Characteristics			Operating Conditions (unless otherwise indicated): 1.8V ≤ VDD ≤ 5.5V at -40°C ≤ TA ≤ +85°C (I-Temp) 4.5V ≤ VDD ≤ 5.5V at -40°C ≤ TA ≤ +125°C (E-Temp) **(Note 1)**				
Param No.	**Characteristic**	**Sym**	**Min**	**Typ**	**Max**	**Units**	**Conditions**
9	Clock Low Time	TLO	90	—	—	ns	1.8V–5.5V (I-Temp)
			45	—	—	ns	2.7V–5.5V (I-Temp)
			45	—	—	ns	4.5V–5.5V (E-Temp)
10	Clock Delay Time	TCLD	50	—	—	ns	
11	Clock Enable Time	TCLE	50	—	—	ns	
12	Output Valid from Clock Low	TV	—	—	90	ns	1.8V–5.5V (I-Temp)
			—	—	45	ns	2.7V–5.5V (I-Temp)
			—	—	45	ns	4.5V–5.5V (E-Temp)
13	Output Hold Time	THO	0	—	—	ns	
14	Output Disable Time	TDIS	—	—	100	ns	

Note 1: This parameter is characterized, not 100% tested.

FIGURE 2-7: GPIO AND INT TIMING

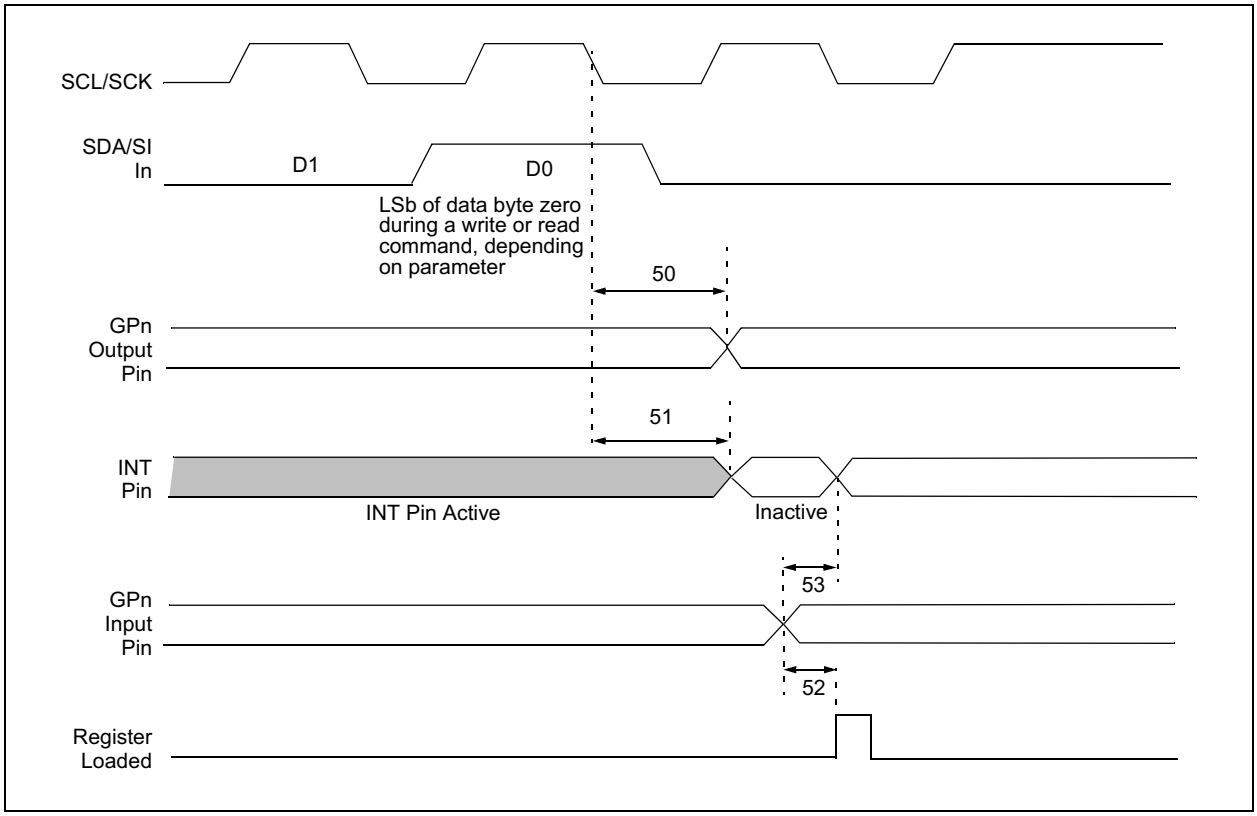

© 2007 Microchip Technology Inc.

TABLE 2-4: GP AND INT PINS

AC Characteristics		Operating Conditions (unless otherwise indicated): 1.8V ≤ VDD ≤ 5.5V at -40°C ≤ TA ≤ +85°C (I-Temp) 4.5V ≤ VDD ≤ 5.5V at -40°C ≤ TA ≤ +125°C (E-Temp) **(Note 1)**					
Param No.	**Characteristic**	**Sym**	**Min**	**Typ**	**Max**	**Units**	**Conditions**
50	Serial Data to Output Valid	TGPOV	—	—	500	ns	
51	Interrupt Pin Disable Time	TINTD	—	—	600	ns	
52	GP Input Change to Register Valid	TGPIV	—	—	450	ns	
53	IOC Event to INT Active	TGPINT	—	—	600	ns	
	Glitch Filter on GP Pins	TGLITCH	—	—	150	ns	**Note 1**

Note 1: This parameter is characterized, not 100% tested

NOTES:

© 2007 Microchip Technology Inc.

3.0 PACKAGING INFORMATION

3.1 Package Marking Information

28-Lead PDIP (Skinny DIP)

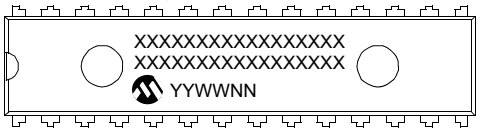

Example:

28-Lead QFN

Example:

28-Lead SOIC

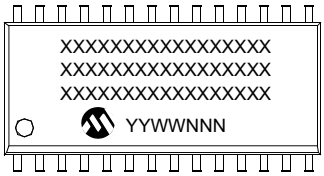

Example:

28-Lead SSOP

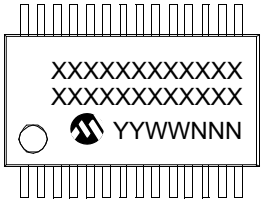

Example:

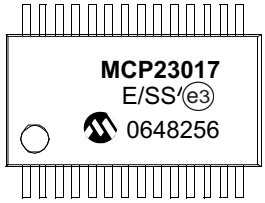

Legend:	XX...X	Customer-specific information
	Y	Year code (last digit of calendar year)
	YY	Year code (last 2 digits of calendar year)
	WW	Week code (week of January 1 is week ‘01’)
	NNN	Alphanumeric traceability code
	e3	Pb-free JEDEC designator for Matte Tin (Sn)
	*	This package is Pb-free. The Pb-free JEDEC designator (e3) can be found on the outer packaging for this package.
Note:	In the event the full Microchip part number cannot be marked on one line, it will be carried over to the next line, thus limiting the number of available characters for customer-specific information.	

28-Lead Skinny Plastic Dual In-Line (SP) – 300 mil Body [SPDIP]

Note: For the most current package drawings, please see the Microchip Packaging Specification located at http://www.microchip.com/packaging

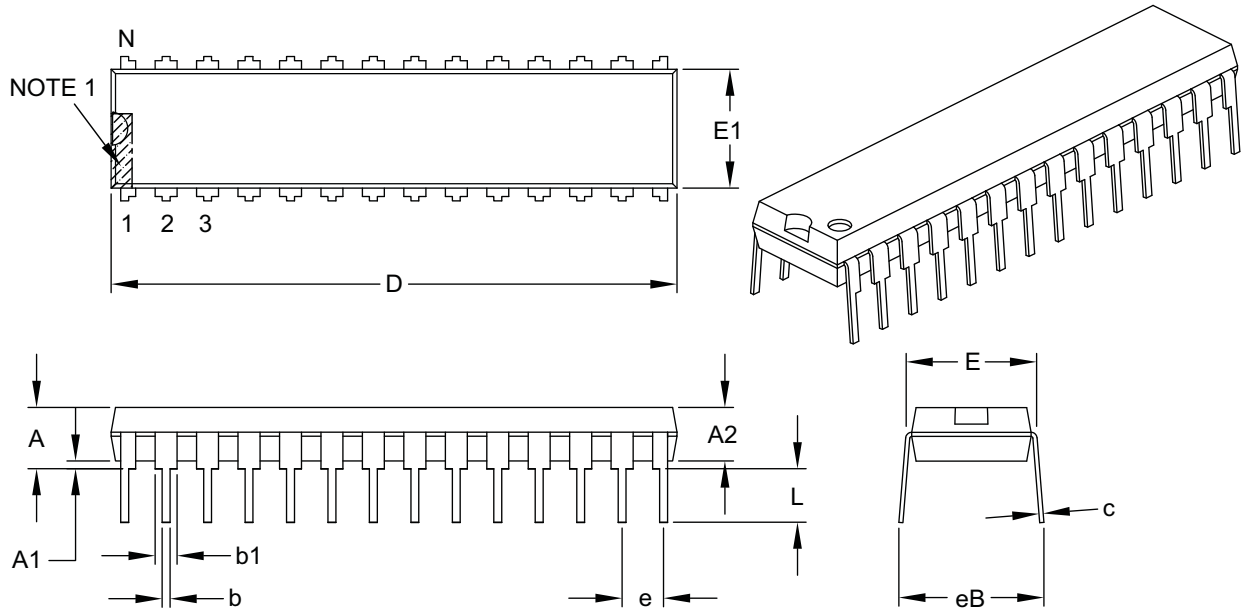

Units		INCHES		
Dimension Limits		MIN	NOM	MAX
Number of Pins	N	28		
Pitch	e	.100 BSC		
Top to Seating Plane	A	–	–	.200
Molded Package Thickness	A2	.120	.135	.150
Base to Seating Plane	A1	.015	–	–
Shoulder to Shoulder Width	E	.290	.310	.335
Molded Package Width	E1	.240	.285	.295
Overall Length	D	1.345	1.365	1.400
Tip to Seating Plane	L	.110	.130	.150
Lead Thickness	c	.008	.010	.015
Upper Lead Width	b1	.040	.050	.070
Lower Lead Width	b	.014	.018	.022
Overall Row Spacing §	eB	–	–	.430

Notes:

1. Pin 1 visual index feature may vary, but must be located within the hatched area.
2. § Significant Characteristic.
3. Dimensions D and E1 do not include mold flash or protrusions. Mold flash or protrusions shall not exceed .010" per side.
4. Dimensioning and tolerancing per ASME Y14.5M.

   BSC: Basic Dimension. Theoretically exact value shown without tolerances.

Microchip Technology Drawing C04-070B

© 2007 Microchip Technology Inc.

28-Lead Plastic Quad Flat, No Lead Package (ML) – 6x6 mm Body [QFN] with 0.55 mm Contact Length

Note: For the most current package drawings, please see the Microchip Packaging Specification located at http://www.microchip.com/packaging

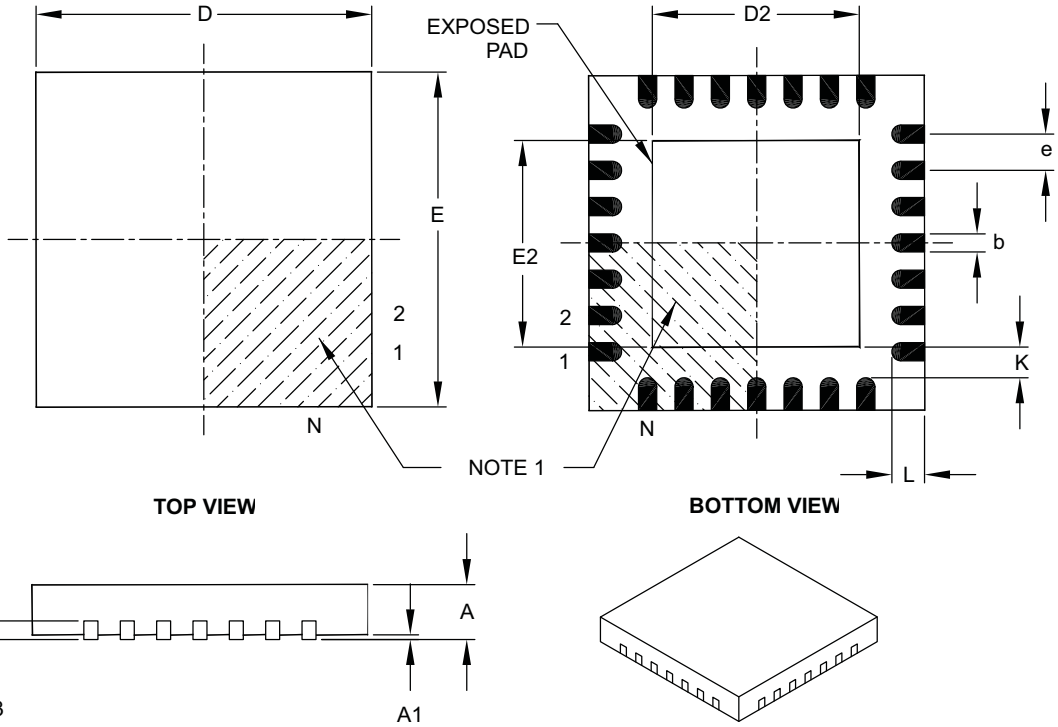

Units		MILLIMETERS		
Dimension Limits		MIN	NOM	MAX
Number of Pins	N	28		
Pitch	e	0.65 BSC		
Overall Height	A	0.80	0.90	1.00
Standoff	A1	0.00	0.02	0.05
Contact Thickness	A3	0.20 REF		
Overall Width	E	6.00 BSC		
Exposed Pad Width	E2	3.65	3.70	4.20
Overall Length	D	6.00 BSC		
Exposed Pad Length	D2	3.65	3.70	4.20
Contact Width	b	0.23	0.30	0.35
Contact Length	L	0.50	0.55	0.70
Contact-to-Exposed Pad	K	0.20	–	–

Notes:

1. Pin 1 visual index feature may vary, but must be located within the hatched area.
2. Package is saw singulated.
3. Dimensioning and tolerancing per ASME Y14.5M.
   BSC: Basic Dimension. Theoretically exact value shown without tolerances.
   REF: Reference Dimension, usually without tolerance, for information purposes only.

Microchip Technology Drawing C04-105B

28-Lead Plastic Small Outline (SO) – Wide, 7.50 mm Body [SOIC]

Note: For the most current package drawings, please see the Microchip Packaging Specification located at http://www.microchip.com/packaging

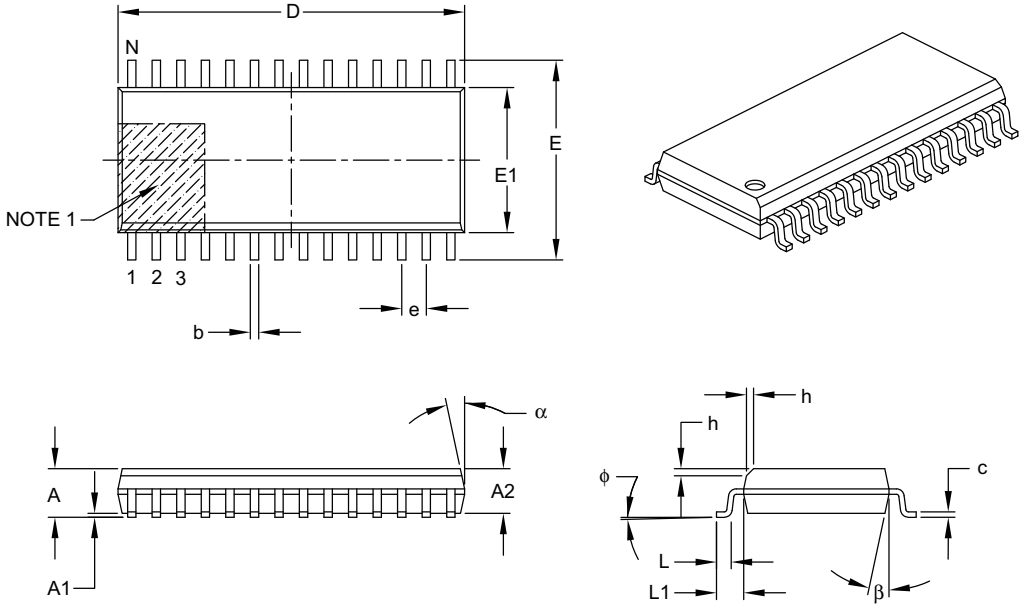

Units		MILLMETERS		
Dimension Limits		MIN	NOM	MAX
Number of Pins	N	28		
Pitch	e	1.27 BSC		
Overall Height	A	–	–	2.65
Molded Package Thickness	A2	2.05	–	–
Standoff §	A1	0.10	–	0.30
Overall Width	E	10.30 BSC		
Molded Package Width	E1	7.50 BSC		
Overall Length	D	17.90 BSC		
Chamfer (optional)	h	0.25	–	0.75
Foot Length	L	0.40	–	1.27
Footprint	L1	1.40 REF		
Foot Angle Top	ϕ	0°	–	8°
Lead Thickness	c	0.18	–	0.33
Lead Width	b	0.31	–	0.51
Mold Draft Angle Top	α	5°	–	15°
Mold Draft Angle Bottom	β	5°	–	15°

Notes:

1. Pin 1 visual index feature may vary, but must be located within the hatched area.
2. § Significant Characteristic.
3. Dimensions D and E1 do not include mold flash or protrusions. Mold flash or protrusions shall not exceed 0.15 mm per side.
4. Dimensioning and tolerancing per ASME Y14.5M.
   BSC: Basic Dimension. Theoretically exact value shown without tolerances.
   REF: Reference Dimension, usually without tolerance, for information purposes only.

Microchip Technology Drawing C04-052B

© 2007 Microchip Technology Inc.

28-Lead Plastic Shrink Small Outline (SS) – 5.30 mm Body [SSOP]

Note: For the most current package drawings, please see the Microchip Packaging Specification located at http://www.microchip.com/packaging

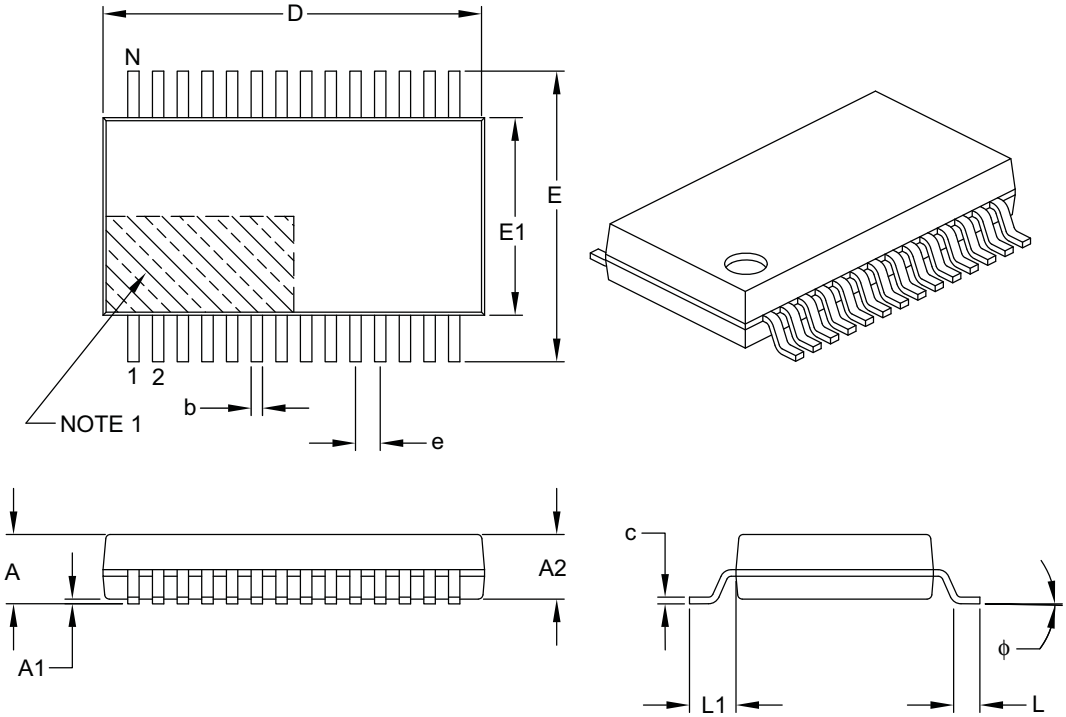

Units		MILLIMETERS		
Dimension Limits		MIN	NOM	MAX
Number of Pins	N	28		
Pitch	e	0.65 BSC		
Overall Height	A	–	–	2.00
Molded Package Thickness	A2	1.65	1.75	1.85
Standoff	A1	0.05	–	–
Overall Width	E	7.40	7.80	8.20
Molded Package Width	E1	5.00	5.30	5.60
Overall Length	D	9.90	10.20	10.50
Foot Length	L	0.55	0.75	0.95
Footprint	L1	1.25 REF		
Lead Thickness	c	0.09	–	0.25
Foot Angle	ϕ	0°	4°	8°
Lead Width	b	0.22	–	0.38

Notes:

1. Pin 1 visual index feature may vary, but must be located within the hatched area.
2. Dimensions D and E1 do not include mold flash or protrusions. Mold flash or protrusions shall not exceed 0.20 mm per side.
3. Dimensioning and tolerancing per ASME Y14.5M.

   BSC: Basic Dimension. Theoretically exact value shown without tolerances.
   REF: Reference Dimension, usually without tolerance, for information purposes only.

Microchip Technology Drawing C04-073B

NOTES:

© 2007 Microchip Technology Inc.

APPENDIX A: REVISION HISTORY

Revision B (February 2007)

1. Changed Byte and Sequential Read in Figure 1-1 from “R” to “W”.
2. Table 2-4, Param No. 51 and 53: Changed from 450 to 600 and 500 to 600, respecively.
3. Added disclaimers to package outline drawings.
4. Updated package outline drawings.

Revision A (June 2005)

- Original Release of this Document.

NOTES:

© 2007 Microchip Technology Inc.

PRODUCT IDENTIFICATION SYSTEM

To order or obtain information, e.g., on pricing or delivery, refer to the factory or the listed sales office.

PART NO.	–	X	/XX
Device		Temperature Range	Package

Device	MCP23017:		16-Bit I/O Expander w/I^{2}C™ Interface
	MCP23017T:		16-Bit I/O Expander w/I^{2}C Interface (Tape and Reel)
	MCP23S17:		16-Bit I/O Expander w/SPI Interface
	MCP23S17T:		16-Bit I/O Expander w/SPI Interface (Tape and Reel)
Temperature Range	E	=	-40°C to +125°C (Extended)
Package	ML	=	Plastic Quad, Flat No Leads (QFN), 28-lead
	SP	=	Plastic DIP (300 mil Body), 28-Lead
	SO	=	Plastic SOIC (300 mil Body), 28-Lead
	SS	=	SSOP, (209 mil Body, 5.30 mm), 28-Lead

Examples:

a) MCP23017-E/SP: Extended Temp., 28LD PDIP package.

b) MCP23017-E/SO: Extended Temp., 28LD SOIC package.

c) MCP23017T-E/SO: Tape and Reel, Extended Temp., 28LD SOIC package.

d) MCP23017-E/SS: Extended Temp., 28LD SSOP package.

e) MCP23017T-E/SS: Tape and Reel, Extended Temp., 28LD SSOP package.

a) MCP23S17-E/SP: Extended Temp., 28LD PDIP package.

b) MCP23S17-E/SO: Extended Temp., 28LD SOIC package.

c) MCP23S17T-E/SO: Tape and Reel, Extended Temp., 28LD SOIC package.

d) MCP23S17-E/SS: Extended Temp., 28LD SSOP package.

e) MCP23S17T-E/SS: Tape and Reel, Extended Temp., 28LD SSOP package.

NOTES:

© 2007 Microchip Technology Inc.

Note the following details of the code protection feature on Microchip devices:

- Microchip products meet the specification contained in their particular Microchip Data Sheet.
- Microchip believes that its family of products is one of the most secure families of its kind on the market today, when used in the intended manner and under normal conditions.
- There are dishonest and possibly illegal methods used to breach the code protection feature. All of these methods, to our knowledge, require using the Microchip products in a manner outside the operating specifications contained in Microchip's Data Sheets. Most likely, the person doing so is engaged in theft of intellectual property.
- Microchip is willing to work with the customer who is concerned about the integrity of their code.
- Neither Microchip nor any other semiconductor manufacturer can guarantee the security of their code. Code protection does not mean that we are guaranteeing the product as "unbreakable."

Code protection is constantly evolving. We at Microchip are committed to continuously improving the code protection features of our products. Attempts to break Microchip's code protection feature may be a violation of the Digital Millennium Copyright Act. If such acts allow unauthorized access to your software or other copyrighted work, you may have a right to sue for relief under that Act.

Information contained in this publication regarding device applications and the like is provided only for your convenience and may be superseded by updates. It is your responsibility to ensure that your application meets with your specifications. MICROCHIP MAKES NO REPRESENTATIONS OR WARRANTIES OF ANY KIND WHETHER EXPRESS OR IMPLIED, WRITTEN OR ORAL, STATUTORY OR OTHERWISE, RELATED TO THE INFORMATION, INCLUDING BUT NOT LIMITED TO ITS CONDITION, QUALITY, PERFORMANCE, MERCHANTABILITY OR FITNESS FOR PURPOSE**.** Microchip disclaims all liability arising from this information and its use. Use of Microchip devices in life support and/or safety applications is entirely at the buyer's risk, and the buyer agrees to defend, indemnify and hold harmless Microchip from any and all damages, claims, suits, or expenses resulting from such use. No licenses are conveyed, implicitly or otherwise, under any Microchip intellectual property rights.

Trademarks

The Microchip name and logo, the Microchip logo, Accuron, dsPIC, KEELOQ, KEELOQ logo, microID, MPLAB, PIC, PICmicro, PICSTART, PRO MATE, PowerSmart, rfPIC, and SmartShunt are registered trademarks of Microchip Technology Incorporated in the U.S.A. and other countries.

AmpLab, FilterLab, Linear Active Thermistor, Migratable Memory, MXDEV, MXLAB, PS logo, SEEVAL, SmartSensor and The Embedded Control Solutions Company are registered trademarks of Microchip Technology Incorporated in the U.S.A.

Analog-for-the-Digital Age, Application Maestro, CodeGuard, dsPICDEM, dsPICDEM.net, dsPICworks, ECAN, ECONOMONITOR, FanSense, FlexROM, fuzzyLAB, In-Circuit Serial Programming, ICSP, ICEPIC, Mindi, MiWi, MPASM, MPLAB Certified logo, MPLIB, MPLINK, PICkit, PICDEM, PICDEM.net, PICLAB, PICtail, PowerCal, PowerInfo, PowerMate, PowerTool, REAL ICE, rfLAB, rfPICDEM, Select Mode, Smart Serial, SmartTel, Total Endurance, UNI/O, WiperLock and ZENA are trademarks of Microchip Technology Incorporated in the U.S.A. and other countries.

SQTP is a service mark of Microchip Technology Incorporated in the U.S.A.

All other trademarks mentioned herein are property of their respective companies.

© 2007, Microchip Technology Incorporated, Printed in the U.S.A., All Rights Reserved.

Printed on recycled paper.

QUALITY MANAGEMENT SYSTEM
CERTIFIED BY DNV
ISO/TS 16949:2002

Microchip received ISO/TS-16949:2002 certification for its worldwide headquarters, design and wafer fabrication facilities in Chandler and Tempe, Arizona, Gresham, Oregon and Mountain View, California. The Company's quality system processes and procedures are for its PIC® MCUs and dsPIC® DSCs, KEELOQ® code hopping devices, Serial EEPROMs, microperipherals, nonvolatile memory and analog products. In addition, Microchip's quality system for the design and manufacture of development systems is ISO 9001:2000 certified.

WORLDWIDE SALES AND SERVICE

AMERICAS

Corporate Office
2355 West Chandler Blvd.
Chandler, AZ 85224-6199
Tel: 480-792-7200
Fax: 480-792-7277
Technical Support:
http://support.microchip.com
Web Address:
www.microchip.com

Atlanta
Duluth, GA
Tel: 678-957-9614
Fax: 678-957-1455

Boston
Westborough, MA
Tel: 774-760-0087
Fax: 774-760-0088

Chicago
Itasca, IL
Tel: 630-285-0071
Fax: 630-285-0075

Dallas
Addison, TX
Tel: 972-818-7423
Fax: 972-818-2924

Detroit
Farmington Hills, MI
Tel: 248-538-2250
Fax: 248-538-2260

Kokomo
Kokomo, IN
Tel: 765-864-8360
Fax: 765-864-8387

Los Angeles
Mission Viejo, CA
Tel: 949-462-9523
Fax: 949-462-9608

Santa Clara
Santa Clara, CA
Tel: 408-961-6444
Fax: 408-961-6445

Toronto
Mississauga, Ontario,
Canada
Tel: 905-673-0699
Fax: 905-673-6509

ASIA/PACIFIC

Asia Pacific Office
Suites 3707-14, 37th Floor
Tower 6, The Gateway
Habour City, Kowloon
Hong Kong
Tel: 852-2401-1200
Fax: 852-2401-3431

Australia - Sydney
Tel: 61-2-9868-6733
Fax: 61-2-9868-6755

China - Beijing
Tel: 86-10-8528-2100
Fax: 86-10-8528-2104

China - Chengdu
Tel: 86-28-8665-5511
Fax: 86-28-8665-7889

China - Fuzhou
Tel: 86-591-8750-3506
Fax: 86-591-8750-3521

China - Hong Kong SAR
Tel: 852-2401-1200
Fax: 852-2401-3431

China - Qingdao
Tel: 86-532-8502-7355
Fax: 86-532-8502-7205

China - Shanghai
Tel: 86-21-5407-5533
Fax: 86-21-5407-5066

China - Shenyang
Tel: 86-24-2334-2829
Fax: 86-24-2334-2393

China - Shenzhen
Tel: 86-755-8203-2660
Fax: 86-755-8203-1760

China - Shunde
Tel: 86-757-2839-5507
Fax: 86-757-2839-5571

China - Wuhan
Tel: 86-27-5980-5300
Fax: 86-27-5980-5118

China - Xian
Tel: 86-29-8833-7250
Fax: 86-29-8833-7256

ASIA/PACIFIC

India - Bangalore
Tel: 91-80-4182-8400
Fax: 91-80-4182-8422

India - New Delhi
Tel: 91-11-4160-8631
Fax: 91-11-4160-8632

India - Pune
Tel: 91-20-2566-1512
Fax: 91-20-2566-1513

Japan - Yokohama
Tel: 81-45-471- 6166
Fax: 81-45-471-6122

Korea - Gumi
Tel: 82-54-473-4301
Fax: 82-54-473-4302

Korea - Seoul
Tel: 82-2-554-7200
Fax: 82-2-558-5932 or
82-2-558-5934

Malaysia - Penang
Tel: 60-4-646-8870
Fax: 60-4-646-5086

Philippines - Manila
Tel: 63-2-634-9065
Fax: 63-2-634-9069

Singapore
Tel: 65-6334-8870
Fax: 65-6334-8850

Taiwan - Hsin Chu
Tel: 886-3-572-9526
Fax: 886-3-572-6459

Taiwan - Kaohsiung
Tel: 886-7-536-4818
Fax: 886-7-536-4803

Taiwan - Taipei
Tel: 886-2-2500-6610
Fax: 886-2-2508-0102

Thailand - Bangkok
Tel: 66-2-694-1351
Fax: 66-2-694-1350

EUROPE

Austria - Wels
Tel: 43-7242-2244-39
Fax: 43-7242-2244-393

Denmark - Copenhagen
Tel: 45-4450-2828
Fax: 45-4485-2829

France - Paris
Tel: 33-1-69-53-63-20
Fax: 33-1-69-30-90-79

Germany - Munich
Tel: 49-89-627-144-0
Fax: 49-89-627-144-44

Italy - Milan
Tel: 39-0331-742611
Fax: 39-0331-466781

Netherlands - Drunen
Tel: 31-416-690399
Fax: 31-416-690340

Spain - Madrid
Tel: 34-91-708-08-90
Fax: 34-91-708-08-91

UK - Wokingham
Tel: 44-118-921-5869
Fax: 44-118-921-5820

12/08/06

© 2007 Microchip Technology Inc.