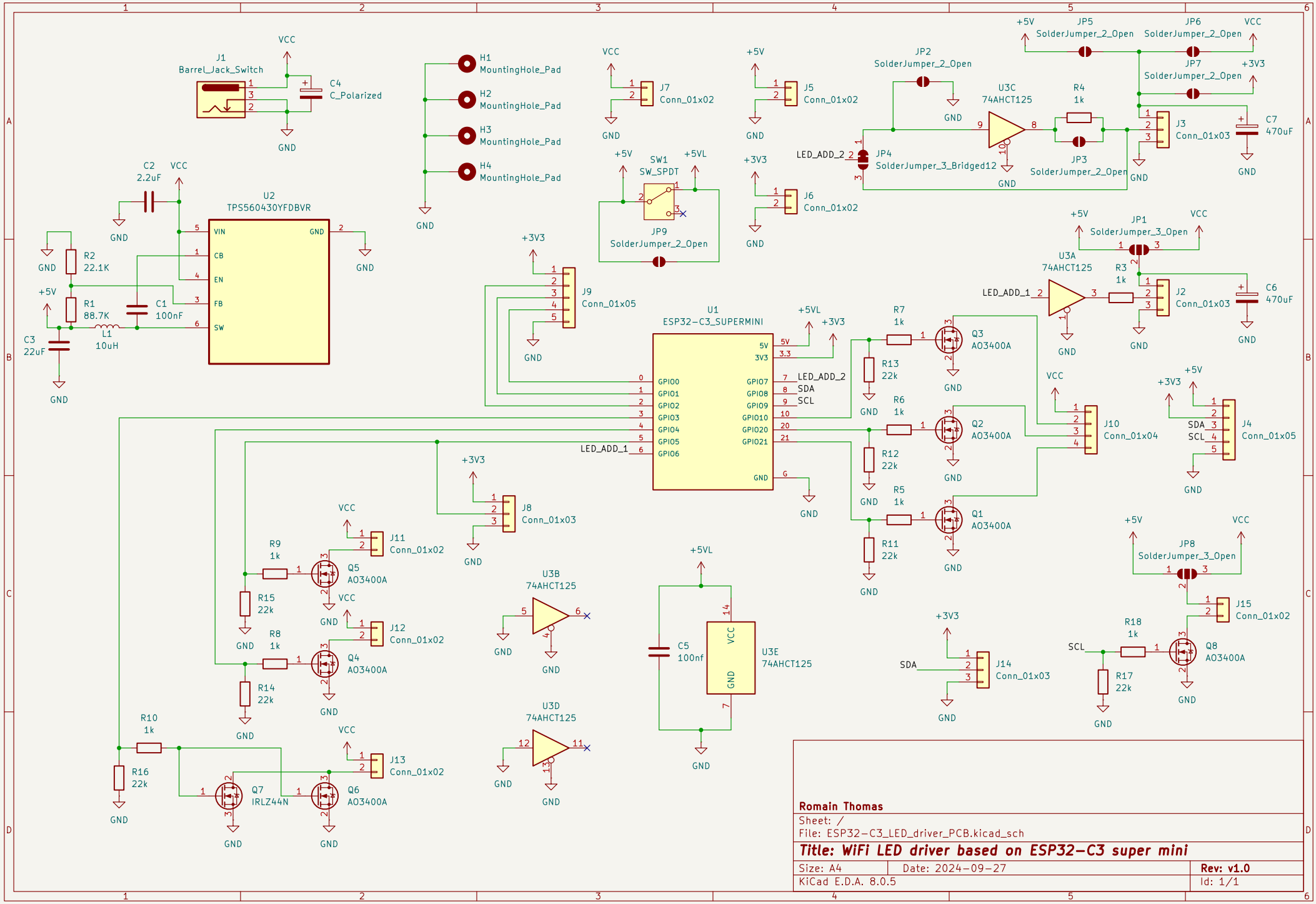

Romain Thomas

Sheet: /

File: ESP32-C3_LED_driver_PCB.kicad_sch

Title: WiFi LED driver based on ESP32-C3 super mini

Size: A4	Date: 2024-09-27	**Rev: v1.0**
KiCad E.D.A. 8.0.5		Id: 1/1