Machine Translated by Google

NS4110B 18W Mono AB/D Class Dual-Mode Audio Power Amplifier

1 characteristic

Operating voltage range: 6V-14V

Output power:

7WÿCLASS Dÿ7.4V/4ÿÿTHD=10%ÿ

10WÿCLASS Dÿ9V/4ÿÿTHD=10%ÿ

18WÿCLASS Dÿ12V/4ÿÿTHD=10%ÿ

Up to 92% efficiency (12V/8ÿ)

ÿ Level setting working mode

No output filter required.

ÿ Differential Input

Excellent power-on and power-off noise suppression

Overcurrent protection, overheat protection, and undervoltage protection.

eSOP -8 package

2. Application Scope

High-power Bluetooth speaker

Portable speaker amplifier

Other consumer audio devices

3. Explanation

The NS4110B is a 20W mono AB/D class switching audio amplifier.

Power amplifier, supports differential input, ultra-low EMI, no filtering required

The chip's operating mode can be controlled via different voltage levels: CTRL

When the pin voltage is 2.0V-5.0V, the chip enters Class D operating mode.

The chip enters Class AB operating mode when the voltage is between 0.9-1.5V, and below 0.5V...

Chip shutdown enables flexible and convenient applications. The NS4110B employs advanced technology.

This technology significantly reduces EMI interference across the entire bandwidth.

It minimizes the impact on other external components. Its output is zero.

The PWM modulation structure requiring a filter reduces the need for external components and PCB layout.

Area and system cost. The NS4110B operates at 12V.

Capable of providing up to 18W of output power to a 4ÿ load, 90% of which is

Its efficiency is more suitable for portable audio systems.

The NS4110B features built-in overcurrent protection, overheat protection, and undervoltage protection.

This function effectively protects the chip from damage under abnormal operating conditions.

The NS4110B is available in an eSOP-8 package and has a rated operating temperature of [missing information].

The temperature range is -40ÿ to 85ÿ.

4 Typical Application Circuits:

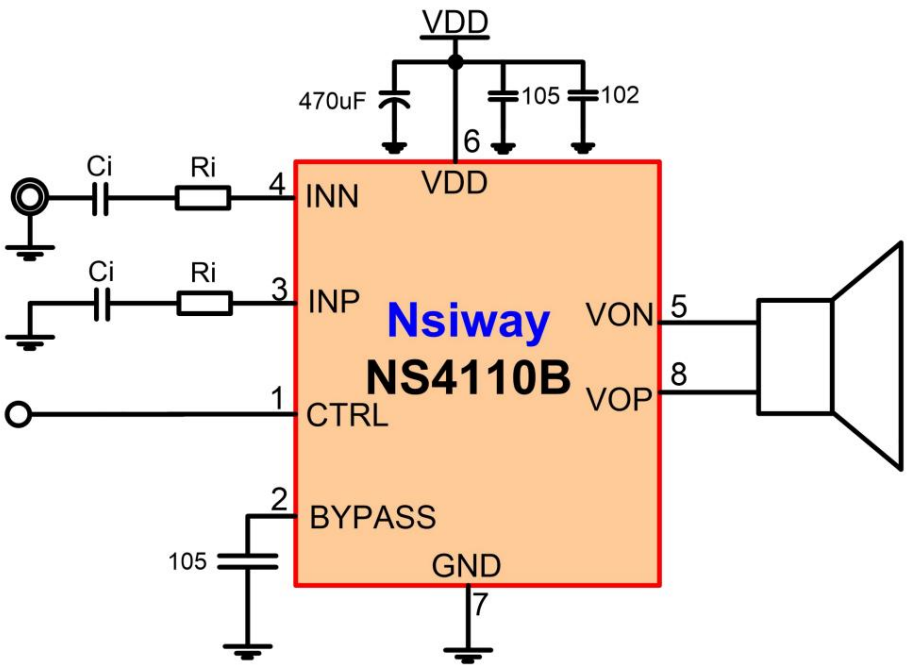

2017Copyright © Nsiway Technology

Machine Translated by Google

5- pin configuration

The pinout diagram of eSOP-8 is shown below:

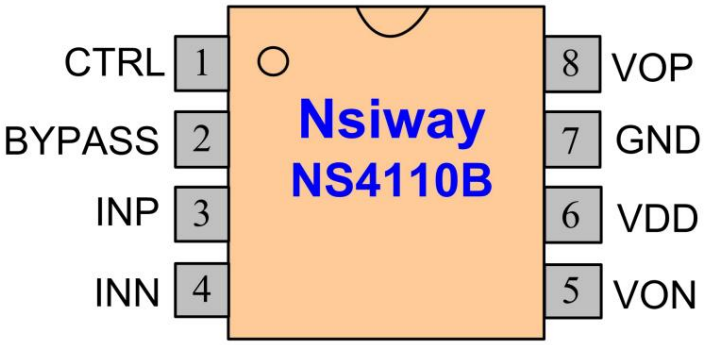

Number Pin	Name	Pin Description
1	CTRL mode control terminal	
2	BYPASS internal reference voltage with external decoupling capacitor	
3	INP amplifier positive input terminal	
4	INN amplifier negative input terminal	
5	VON output negative terminal	
6	VDD power input	
7	GND (Power Ground)	
8	VOP output positive terminal	

2017 Copyright © Nsiway Technology

Machine Translated by Google

6 Limiting operating parameters

ÿ Input voltage range ÿ	6V ~ 14V
CTRL pin voltage ÿ ESD	0V ~ 5V
voltage ÿ Operating	>2000V
temperature range ÿ Storage	-45ÿ ~ +85ÿ
temperature range ÿ	-55ÿ ~ +150ÿ
Maximum junction	+150ÿ
temperature ÿ Soldering temperature	+260ÿ
(within 10s) ÿ	10/60 oC/W

ÿJC/ÿJA Note: Exceeding the above extreme operating parameter ranges may cause permanent damage to the chip. Prolonged exposure to any of the above extreme conditions may aff

This affects the reliability and lifespan of the chip.

7. Structural Diagram

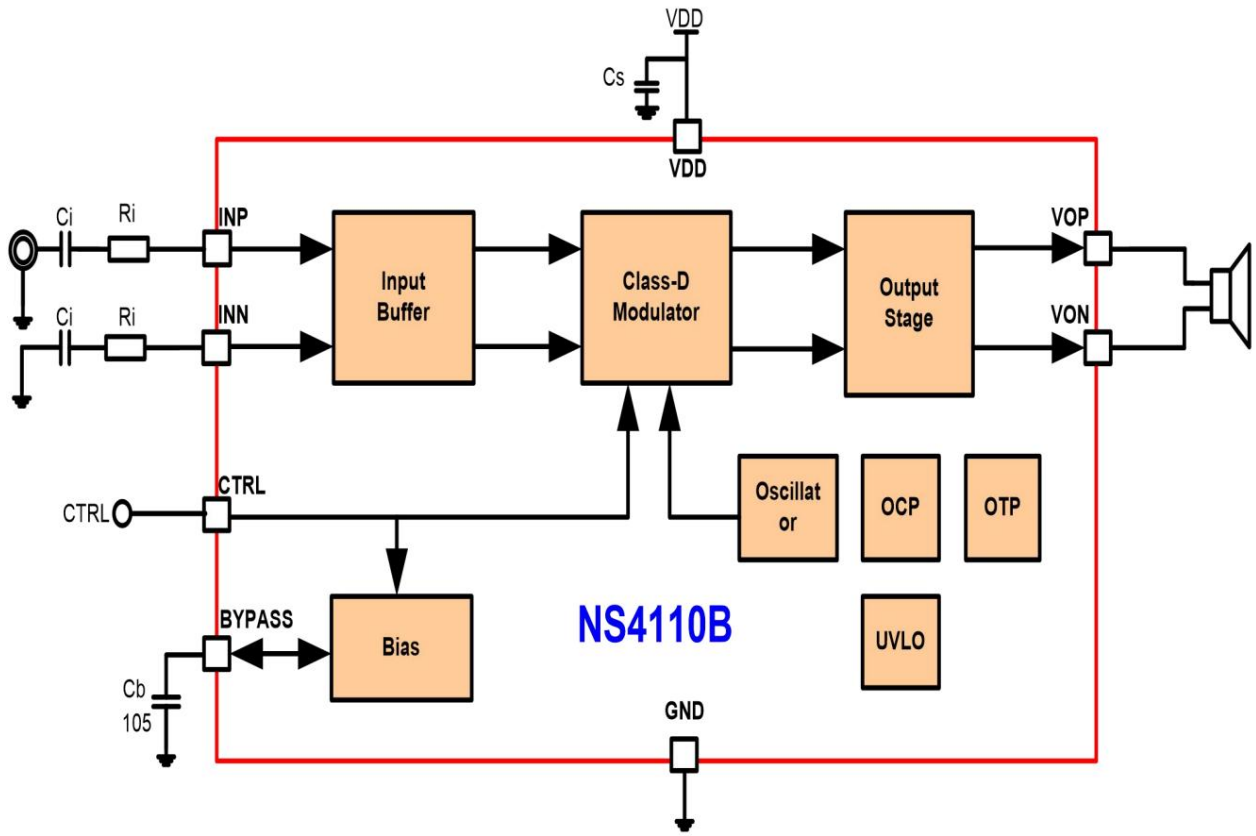

2017 Copyright © Nsiway Technology

Machine Translated by Google

8 Electrical Characteristics

Operating conditions (unless otherwise specified): T=25ÿ, VDD=12V, RL=4ÿ.

symbol	parameter	Test conditions	Minimum value, standard value, maximum value, unit			
VDD Recommended operating voltage			6	12	14	In
IDD power supply quiescent current		VDDÿ9V,CLASS AB		4		m.a.
		VDDÿ9V,CLASS D		15		m.a.
		VDDÿ12V,CLASS D		17		m.a.
ISD shutdown leakage current VCTRL = 0V			0	0.1	1	µA
VOS output offset voltage VIN = 0V, Gain = 20dB				5		mV
PSRR (Power Supply Rejection Ratio)		217Hz		-85		dB
		20kHz		-82		dB
CMRR (Common Mode Rejection Ratio)				-80		dB
fSW	Modulation frequency			440		kHz
or	efficiency	VDD=12V,RL =8ÿ		92		%
		VDD=12V,RL =4ÿ		85		%
VClassD	Class D pattern Voltage threshold		2	3.3	5	In
VClassAB	Class AB pattern Voltage threshold		0.9	1.2	1.5	
VSD	Shutdown mode Voltage threshold		0	0.2	0.5	
tMOD mode conversion time				0.1		ms
THD+N Total Distortion + Noise		Gain=20dB,f=1kHz RL=8ÿ,PO=1W		0.03		%
SNR	Signal-to-noise ratio	Gain=20dB,f=1kHz RL=8ÿ,VDD=12V,PO=10W		-92		dB
OTP thermal protection temperature				160		ÿ
OTH Hysteresis Temperature				20		ÿ

2017 Copyright © Nsiway Technology

Machine Translated by Google

PO output power	VDD=7.4V	THDÿ1%, f=1KHz,CLASS D RL=4ÿ		5.5		IN
		THDÿ10%,f=1KHz, CLASS D RL=4ÿ		7		IN
		THDÿ1%, f=1KHz,CLASS AB RL=4ÿ		5.5		IN
		THDÿ10%, f=1KHz,CLASS AB RL=4ÿ		7		IN
	VDD=9.0V	THDÿ1%,f=1KHz,CLASS D RL=4ÿ		8		IN
		THDÿ10%, f=1KHz,CLASS D RL=4ÿ RL=8ÿ		10 6		IN
	VDD=12V	THDÿ1%,f=1KHz,CLASS D RL=4ÿ		15		IN
		THDÿ10%,f=1KHz,CLASS D RL=4ÿ RL=8ÿ		18 10		IN

Note: When the chip operates at a high voltage, a good heat dissipation environment should be ensured to avoid over-temperature protection.

2017 Copyright © Nsiway Technology

Machine Translated by Google

9 Typical characteristic curves

Unless otherwise specified, in the following characteristic curves, T=25ÿ and CTRL=5V.

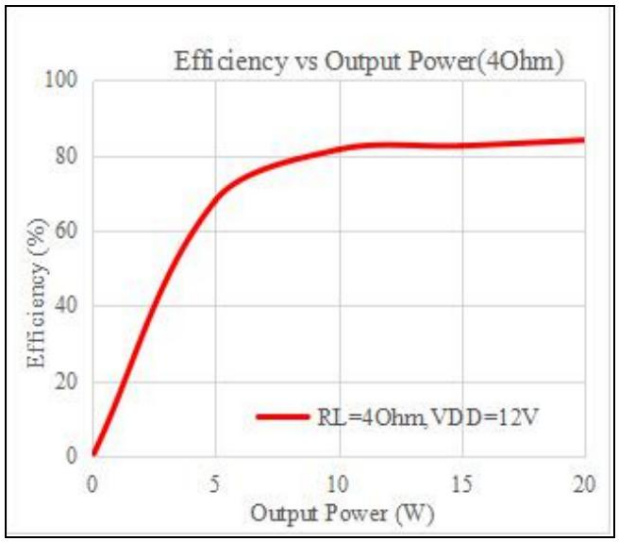

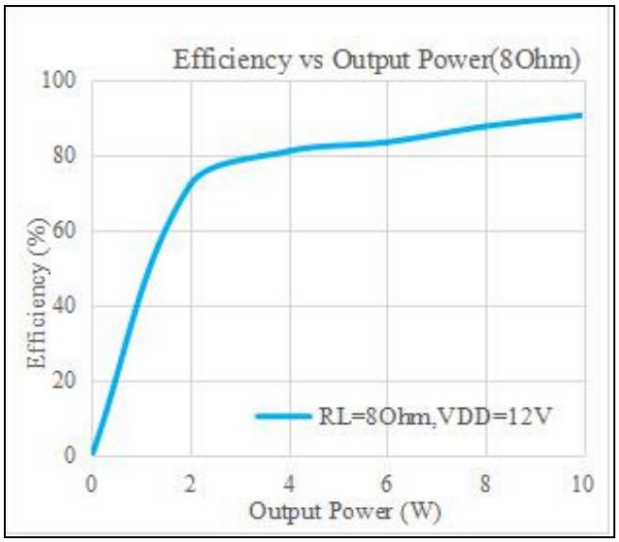

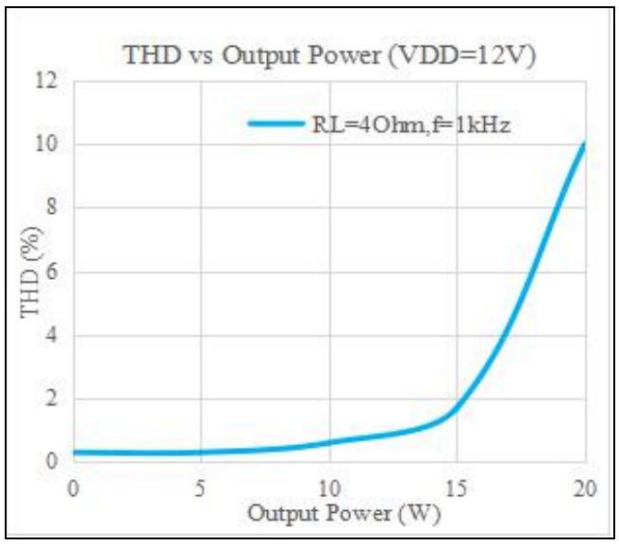

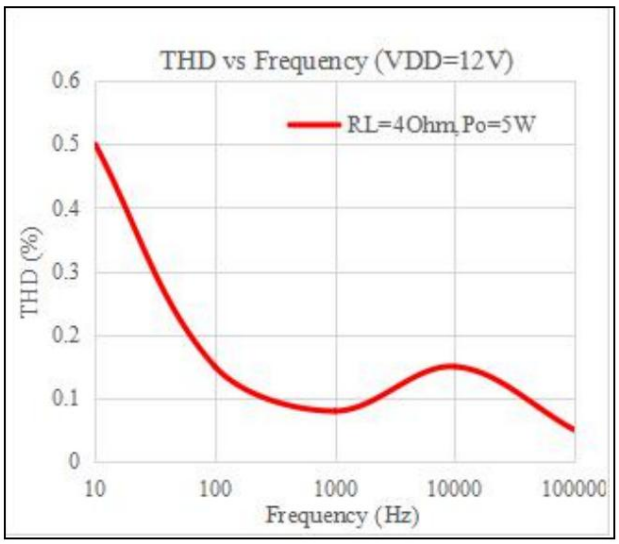

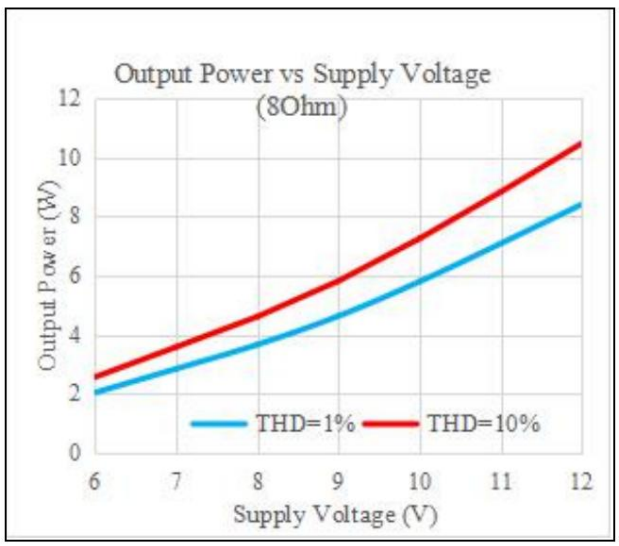

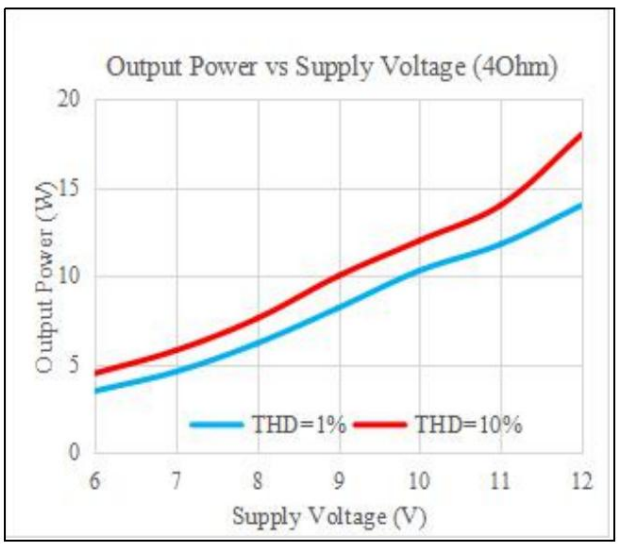

2017 Copyright © Nsiway Technology

Machine Translated by Google

10 Application Notes

10.1 Working Mode Settings

The NS4110B's operating mode is controlled via the CTRL pin. Different voltage levels select the operating mode: when the voltage on this pin is below 0.5V, The chip is in a low-power shutdown state; when the voltage at this pin is 0.9V~1.5V, the chip operates in Class AB mode; when the voltage at this pin is 2V~5V... At this time, the chip operates in Class D mode. See the table below:

CTRL pin voltage	Work mode
0V~0.5V	Low power shutdown
2V~5V	Class D working mode
0.9V~1.5V	AB Class Working Mode

Note: When the chip supply voltage is 12V or higher and it enters Class AB operating mode, the chip will generate excessive heat, triggering over-temperature protection.

10.2 Typical Application Circuits

Differential input application circuit:

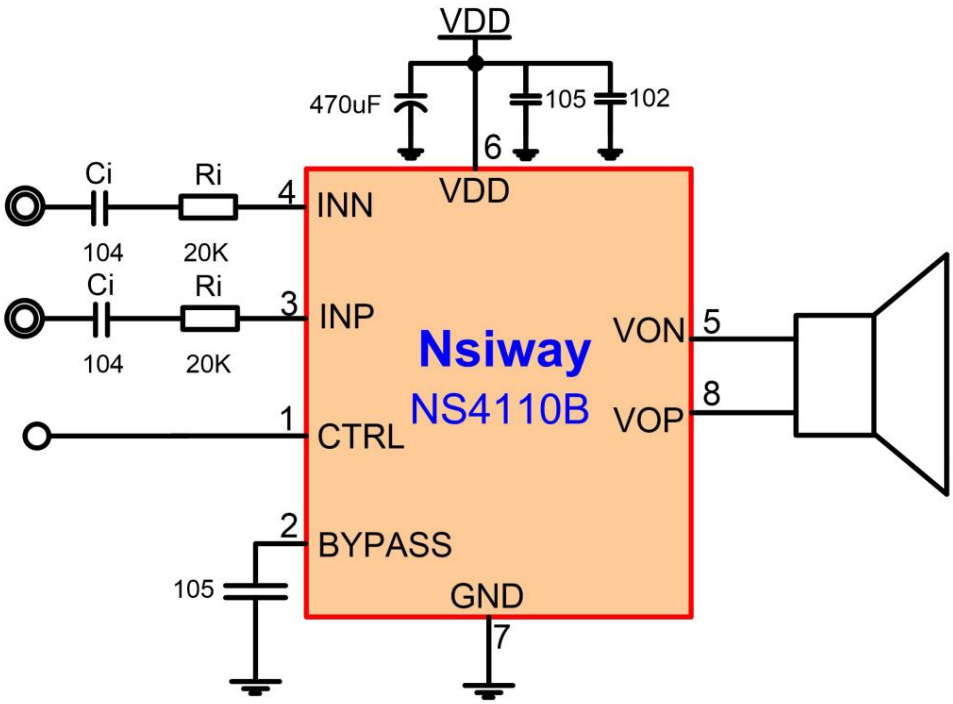

2017 Copyright © Nsiway Technology

Machine Translated by Google

Single-ended input application circuit:

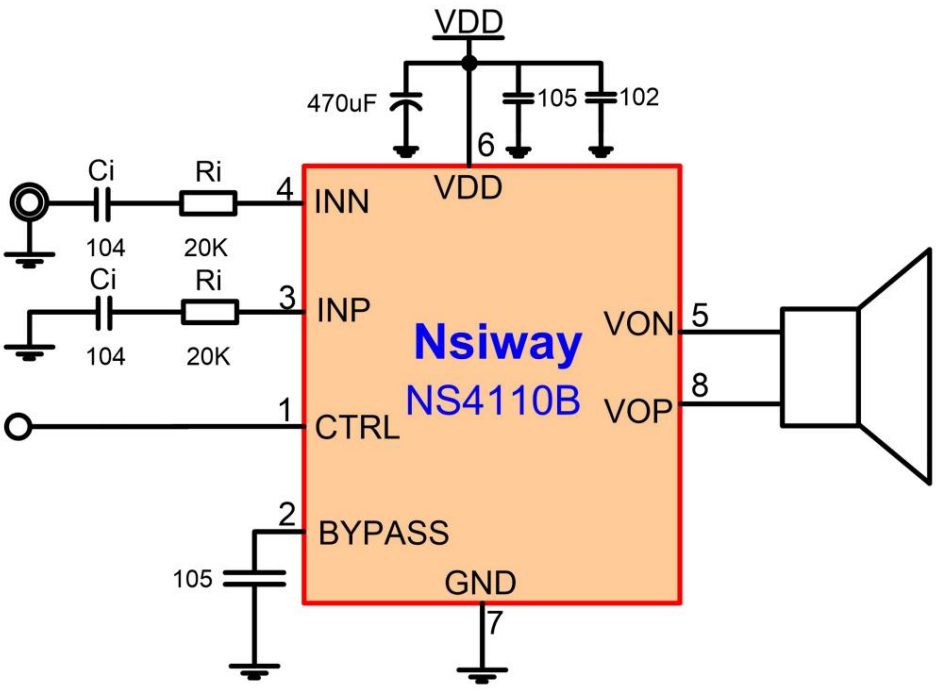

10.3 Power Amplifier Gain Setting and Input Resistance Selection

The gain of the NS4110B is set by the external input resistor Ri, using the following formula:

$$A_{In} = \frac{300k}{R_i}$$

The 300kÿ resistor is the internal feedback resistor, with a maximum deviation of ±10%.

For example, if the input resistance Ri = 30kÿ, the gain is: Av = 300kÿ/30kÿ = 10 times (20dB).

10.4 Input Capacitor Selection

The external input capacitor Ci and the total input resistance Ri constitute the input high-pass filter. The formula for calculating the -3dB cutoff frequency is:

$$f_C = \frac{1}{2\pi R_i C_i}$$

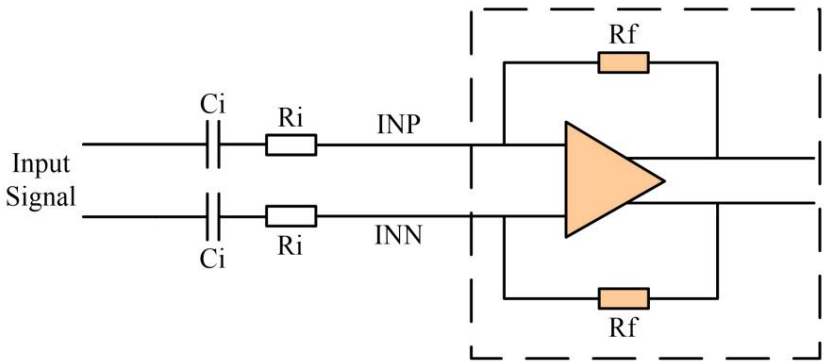

2017 Copyright © Nsiway Technology

Machine Translated by Google

Once the gain, i.e., the input impedance, is determined, the selection of the input DC blocking capacitor Ci becomes particularly important. On one hand, the capacitor value directly affects... The amplifier's low-frequency characteristics; on the other hand, the suppression performance of power-on/off pop noise is affected by the capacitance. If the coupling capacitance is large, the feedback network... A large delay can easily lead to popping noises, while a smaller coupling capacitor can reduce this noise. Therefore, the selection of the input capacitor Ci should consider both aspects. For example, with a gain of 20dB, a total input impedance of 30kÿ, and a -3dB inflection point fc of 53Hz, the calculation formula above yields Ci = 0.1uF.

Additionally, a small amount of leakage current is generated when the input signal passes through the input capacitor Ci to the input network and feedback network. This leakage current will affect the amplifier. The input terminal generates a DC offset, which affects the maximum swing of the final output, especially in high-gain applications. Therefore, the input capacitor... It is best to choose tantalum capacitors or ceramic capacitors with low leakage current.

10.5 Power supply decoupling capacitor

The NS4110B is a high-performance audio power amplifier; therefore, appropriate power supply decoupling capacitors can ensure that the total harmonic distortion of the amplifier output is maintained. The total noise level (THD) is sufficiently low. Decoupling capacitors can also reduce interference from power pulses on the speaker. Appropriate measures can be taken to address different types of noise on the power line. Choose different capacitor decoupling networks:

For transient high-frequency noise that is sensitive to due to parasitic parameters of the circuit itself, such as bonding wire and copper trace inductance, or even lead frame inductance, it is possible to Decoupling is achieved using a high-quality ceramic capacitor with low equivalent series resistance (ESR) (220pF to 1000pF). This capacitor should be placed as close as possible to the amplifier's power pins, and proper grounding is also essential.

For low-frequency noise caused by filter resonance, PWM switching, or even a random digital signal, a high-quality, compliant... Use a capacitor with a value of 0.1uF to 1uF for decoupling. This capacitor should ideally be placed as close as possible to the power source.

Additionally, a 220uF or larger aluminum electrolytic capacitor can decouple large-signal transient interference. This capacitor should be connected close to the power supply pin.

10.6 Output Filter

The NS4110B module was tested with a ferrite bead filter under various conditions, including high power and long output load lines, while operating in Class D mode. All can pass the FCC Class B test. The type and specifications of the magnetic beads can be selected according to the actual use. See the figure below:

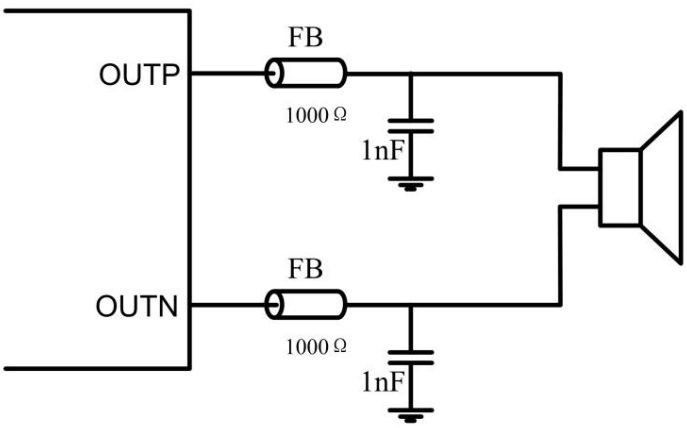

2017 Copyright © Nsiway Technology

Machine Translated by Google

10.7 PCB Layout Recommendations

In most applications, the ferrite bead filter used in the NS4110B is sufficient. However, the switching edges of Class D power amplifiers change very rapidly.

Speed is crucial, therefore, careful consideration is needed during the layout process. Regarding noise and the system's electromagnetic compatibility (EMC) requirements, the following are some suggestions:

(1) Decoupling capacitors should be reserved for different noise sources and interference. The capacitors should be placed as close as possible to the pins.

(2) Minimize the output current loop. Whether using a ferrite bead or a filter composed of an inductor and capacitor, place it as close as possible to the output pin. This part...

Keep electrical circuits as far away as possible from sensitive signal lines and circuits.

(3) The ground wire and power wire should be as short and as wide as possible.

(4) The heat sink should be properly soldered into the heat dissipation area of the PCB board.

10.8 Test Circuit

The NS4110B test circuit is shown in the figure below. When measuring a Class D mode power amplifier, a low-pass filter is necessary. Two...

A 33uH inductor is connected in series across the load resistor to function as an equivalent speaker. If only a pure resistor is used to replace the speaker load, the measured results will be different.

The speaker performs poorly when under load, including indicators such as power, efficiency, and distortion.

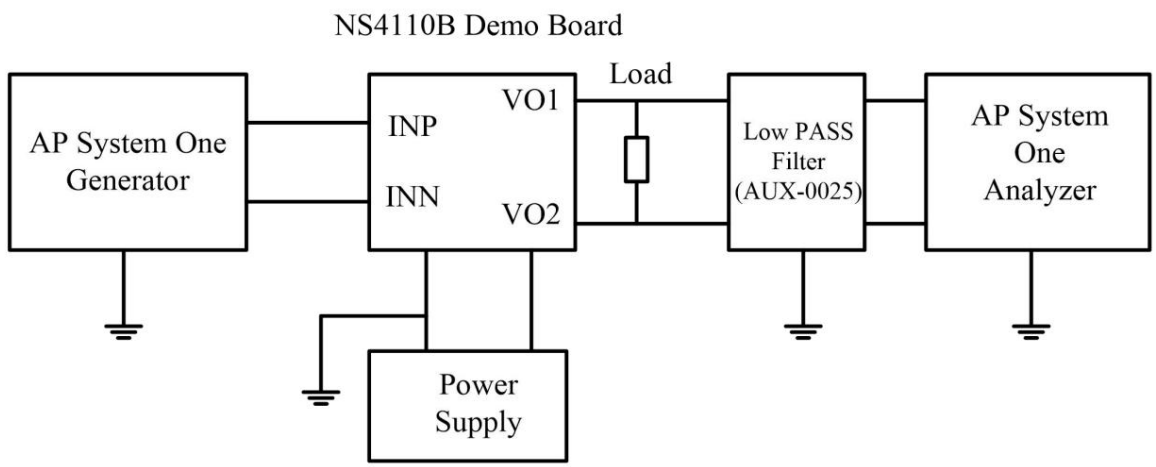

2017 Copyright © Nsiway Technology

Machine Translated by Google

11 Packaging Information

ESOP8 PACKAGE OUTLINE DIMENSIONS

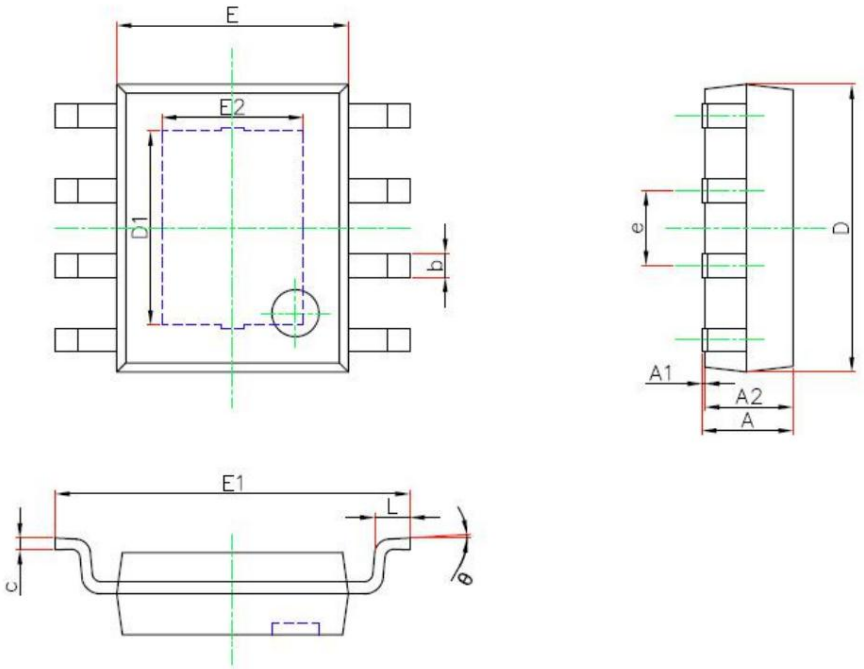

Symbol	Dimensions In Millimeters		Dimensions In Inches	
	Min.	Max.	Min.	Max.
A	1.300	1.700	0.051	0.067
A1	0.000	0.100	0.000	0.004
A2	1.350	1.550	0.053	0.061
b	0.330	0.510	0.013	0.020
c	0.170	0.250	0.007	0.010
D	4.700	5.100	0.185	0.201
D1	3.202	3.402	0.126	0.134
E	3.800	4.000	0.150	0.157
E1	5.800	6.200	0.228	0.244
E2	2.313	2.513	0.091	0.099
e	1.270(BSC)		0.050(BSC)	
L	0.400	1.270	0.016	0.050
θ	0°	8°	0°	8°

Version **12** Change History

Statement: Shenzhen Naxinwei Technology Co., Ltd. reserves the right to modify product information and specifications at any time without notice.

The right to interpret this manual belongs to Shenzhen Naxinwei Technology Co., Ltd., which is also responsible for the final interpretation.

2017 Copyright © Nsiway Technology