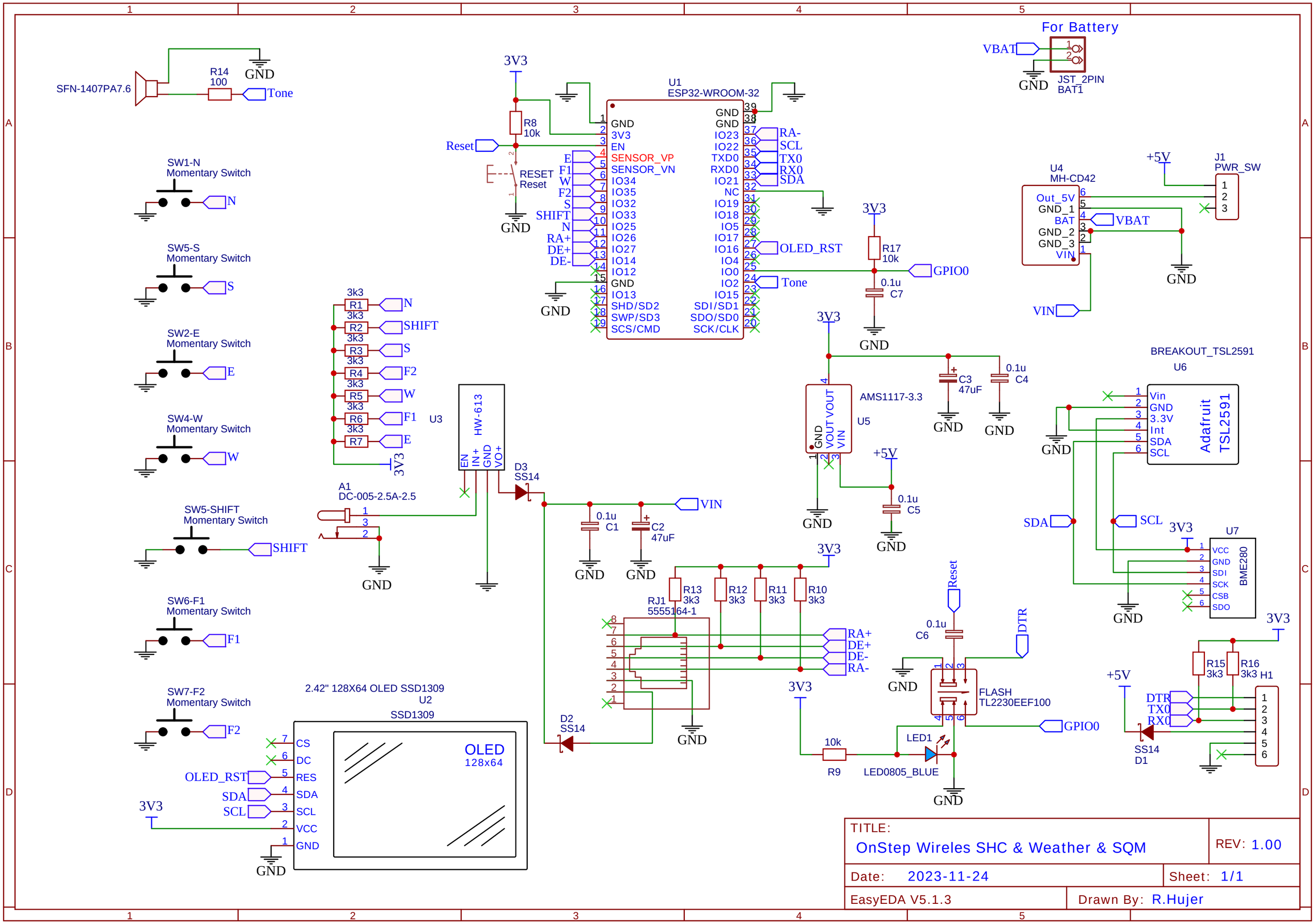

TITLE:
OnStep Wireles SHC & Weather & SQM

REV: 1.00

Date: 2023-11-24

Sheet: 1/1

EasyEDA V5.1.3

Drawn By: R.Hujer