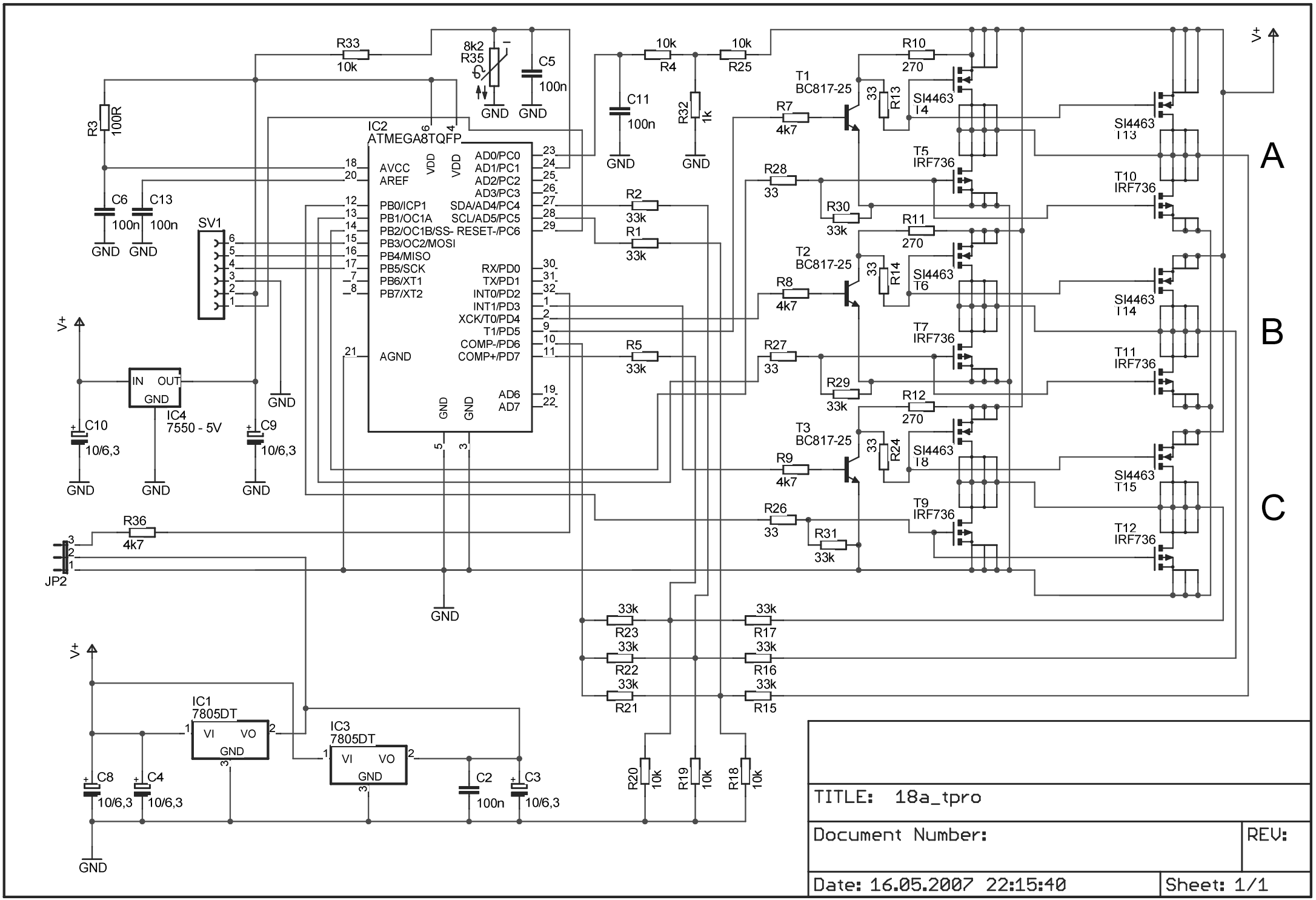

TITLE: 18a_tpro

Document Number:

REV:

Date: 16.05.2007 22:15:40

Sheet: 1/1