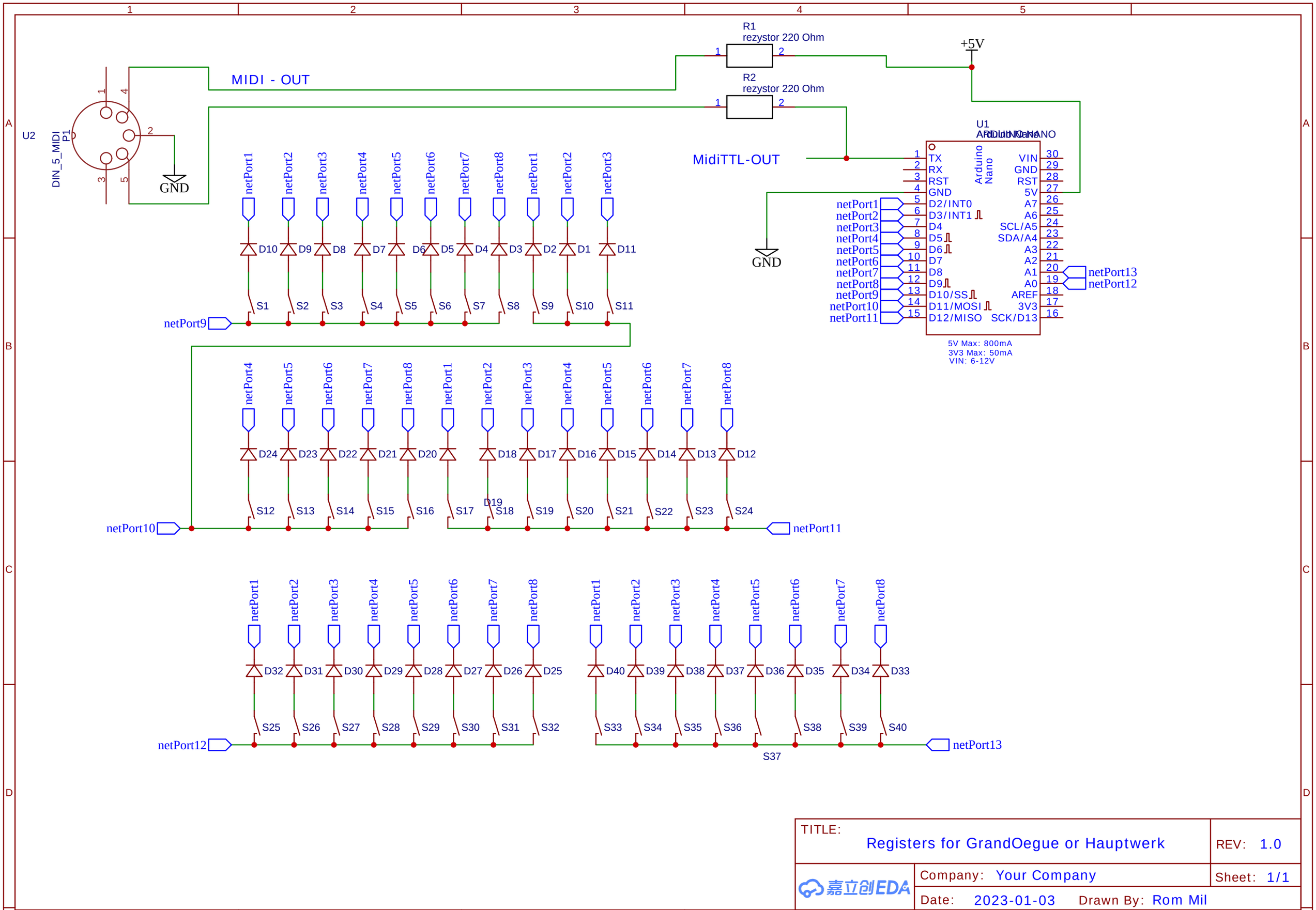

TITLE: Registers for GrandOegue or Hauptwerk		REV: 1.0
嘉立创EDA	Company: Your Company	Sheet: 1/1
	Date: 2023-01-03 Drawn By: Rom Mil	