IR2130 3 Faz Gate Driver
AMPUL DEMO

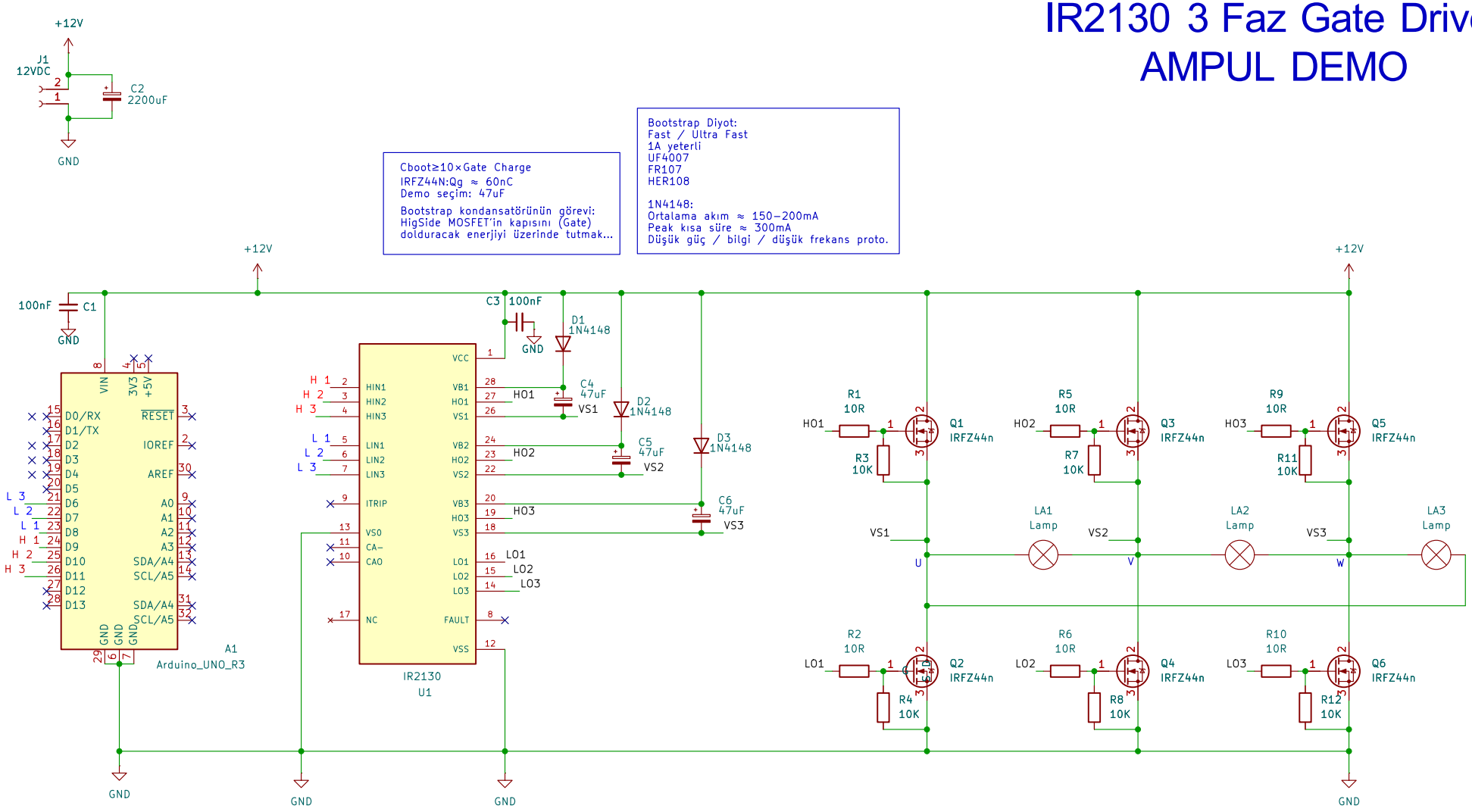

YouTube
Dr.TRonik

Sheet: /
File: IR2130_LOW_HIGH_LAMBA_3FAZ_UNO.kicad_sch

Title: IR2130 LOW / HIGH SIDE TEST

Size: A4	Date: 2026-02-24	**Rev: V.1.0**
KiCad E.D.A. 10.0.0		Id: 1/1