Fundamentals of Java : 2

Authored by : Sangeeta Joshi ***Presented by: Sangeeta Joshi***

Agenda

- Types of variables in Java
- static
- Memory Layout
- Packages
- Static Imports
- Arrays

Variables

- A variable is a name given to memory location.
- That memory is associated to a data type and can be assigned a value.

```
int n;
float f1;
char ch;
double d;
```

Variables conti…

Assigning a value to a variable

Initialization of a variable with a primary value

```
1.int  n1;
2.n1 =21 ;            // assignment
3.int   i2 = 18;      // initialization
4.char  ch = 'S';     // initialization
5.double d = 21.8;    // initialization
6.d = n1;                   // assignment
7.float f1 = 16.13F;
```

Types of variables in java

- Instance Variables : Copy exists per instance
- Static Variables : Class level variable i.e. copy exists per class
- Local Variables : Variables declared within methods or blocks. They are local to the block where they are declared

static

```
class Date
{
    static int ctr;
   int dd;
   int mm;
   int yy;
}
```

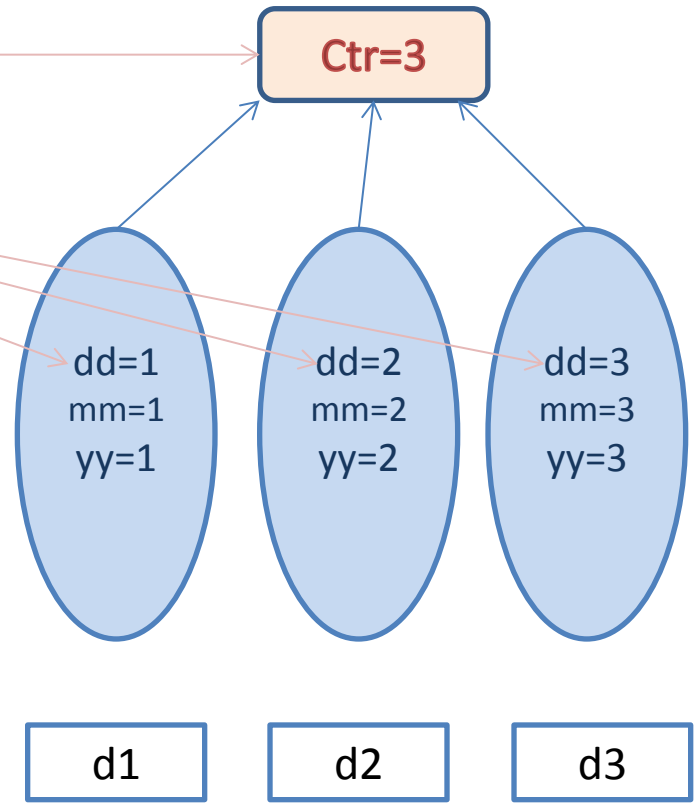

More on static

- Static members are associated with the class as a whole rather than with a particular instance
- static variable : It's a class level variable.
- static method : If a method is declared as static ,it becomes a class level method & thus can be invoked using class name. (where as non static methods require an instance of a class for invocation.)
- ' this' is never passed to any static data member or function
- WHY main() is static ?
- Static blocks can be used for initialization of static variables
- Static blocks get executed even before main() method

Memory Layout

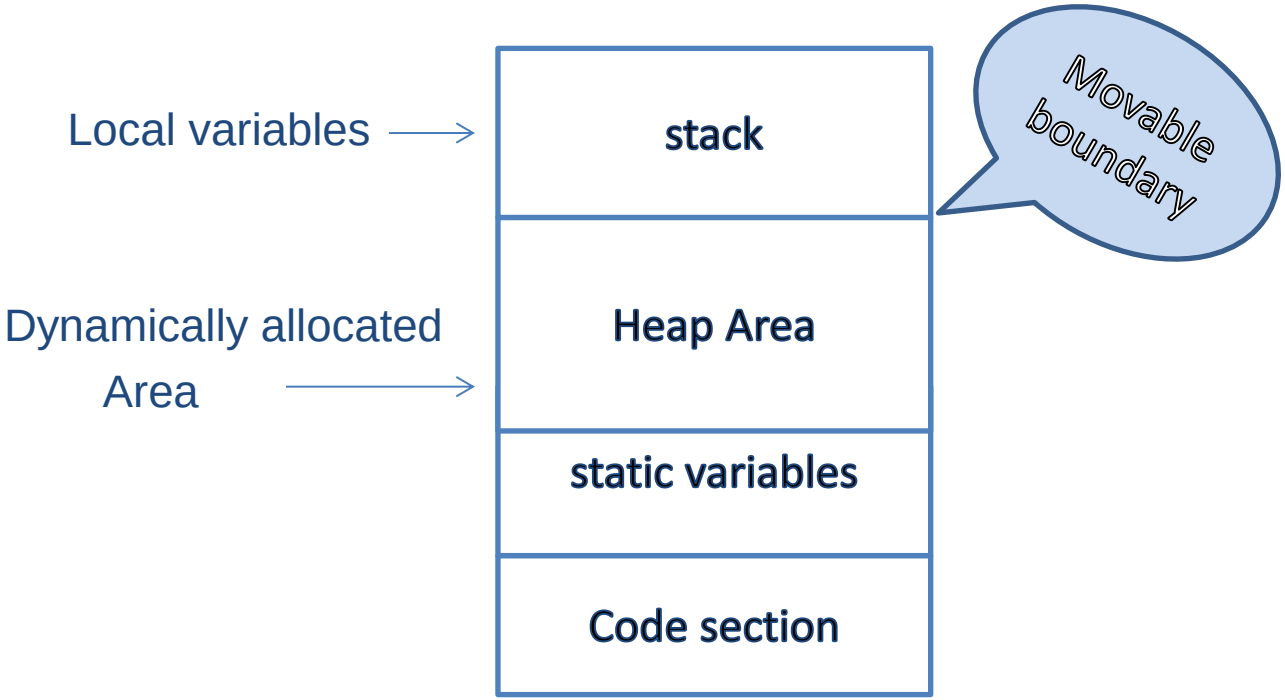

Memory

Local variables are created on stack where as objects are created on heap.

```
class Demo {
  public static void main (String args[])
     {
          Date d = new Date ();
     }
   }
```

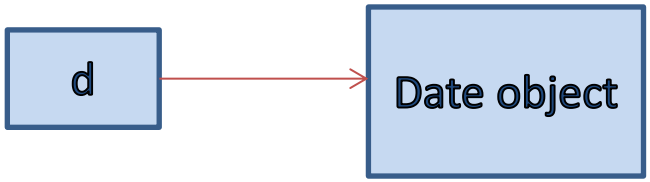

stack heap

Packages

- A *package* is a grouping of related classes & interfaces providing access protection and name space management
- Programmers bundle groups of related types into packages to make it easier to find & use related classes & interfaces
- Packages help to avoid naming conflicts
- There can be only one package declaration per source file
- In case if no package is declared, then the class is placed into the default package i.e., the current folder

Packages …..continued

- If you want to create a package ,the package statement should be the first statement.
- The fully qualified name of a class is : packageName.className
- Fully qualified name of class Date in java is

java.util.Date

package name | subpackage name | class name

Packages …..continued

```
package p1;

import  java.util.Date;
import java.sql.*;

class MyClass
{



}
```

Basic Structure Of Java File

- Package statement……optional
- Import statements …..optional
- Standard class writing

Packages …..continued

- Imoprt staement imports public classes within the package
  It does not import sub packages.

- Classes from java.lang package are by default imported.

How Compiler locates classes?

- first checks current directory
- all directories in the class path for
  the actual class file
  or
  the subdirectory that has same name of imported package

- then looks for the file in one of the imported packages
- then finally looks for file in java.lang package
- if still unable to locate then raises error

Static Imports

- There are situations where you need frequent access to static final fields (constants) and static methods from one or two classes.
- Prefixing the name of these classes over and over can result in cluttered code.
- The *static import* statement gives you a way to import the constants and static methods that you want to use so that you do not need to prefix the name of their class.

Static Imports

- The static import declaration is analogous to the normal import declaration
- Normal import declaration: imports classes from packages.
- Advantage : classes can be used without package qualification
- static import declaration : imports static members from classes
- Advantage: static members can be used without class qualification

Static Imports

Before Java 5.0

Required to fully qualify every static member referenced from external classes

```
Math.sin(x)
```

Now :

```
import static TypeName.Identifier;
import static Typename.*;
```

Also works for static methods and enums

```
sin(x)
```

Static Imports

Caution : Use Static import Very sparingly!

- If you overuse the static import feature, it can make your program unreadable and unmaintainable
- Importing *all* of the static members from a class : Not a good idea
- use it when you require frequent access to static members from one or two classes
- Used appropriately, static import can make your program *more* readable

Array(contd)

- An *array* is a container object that holds a fixed number of values of a single type. The length of an array is established when the array is created. After creation, its length is fixed.

- An array is contiguous block of memory locations referred by a common name.

- Each item in an array is called an *element*, and each element is accessed by its numerical *index*.

Declaring Arrays

- Collection of values of a single type
- Declare arrays of primitive or class types.
  - char s[]; or char [] s;
  - Point p[]; or Point [] p;

- An array is an object in java
- Array reference is stored on stack whereas actual array is created on heap

Creating Arrays

Arrays can be created either using new keyword or without using new keyword

```
int arr [] = { 1,2,3,4,5,6  }          ……..primitive data type
        OR
 int arr[] =new int[6];
        arr[0]=1;

Date d[]= new Date[4];                 …….Date  type

        d[0]=new Date();
         d[1]=new Date();
```

Initializing Arrays

Initialize an array element

Create an array with initial values

```
String names[] = new String[3];
names [0] = "Jack";
names [1] = "Jill";
names [2] = "Tom";

MyClass array[] = {new MyClass(), new MyClass() };
```

Initializing Arrays (contd)

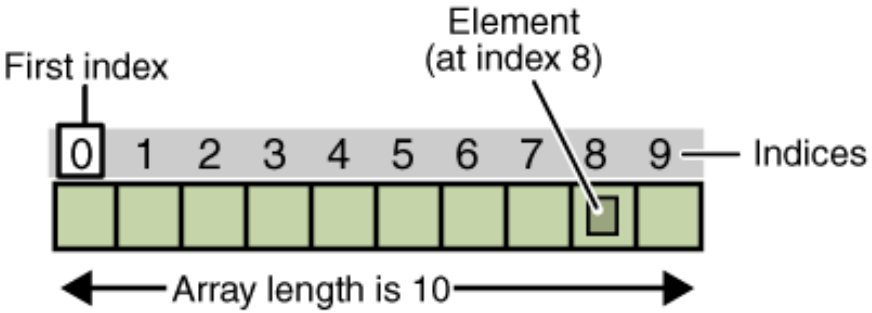

An array of ten elements

One-dimensional Arrays

- One-dimensional array is a list of variables of the same data type.
- Syntax to declare a one-dimensional array type
- array_name []; //type is the datatype of the array.
- For Example:

  String designations []; // designations is name of the array.

One-dimensional Arrays (contd)

int [] a = {1, 2, 4, 8, 16};

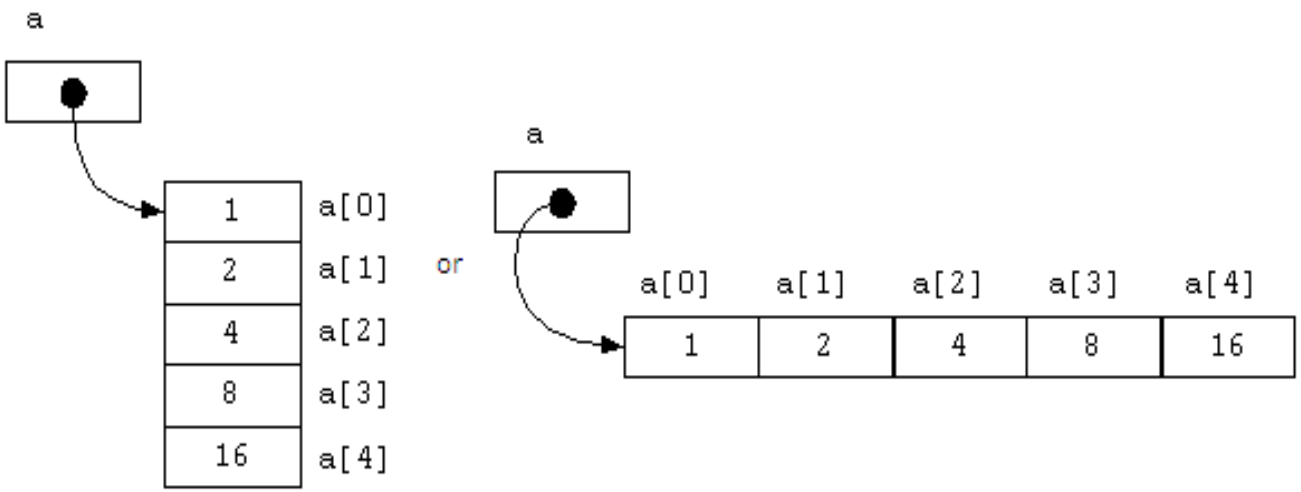

Two-dimensional Arrays

- In additions to one-dimensional arrays, you can create two-dimensional arrays. To declare two-dimensional arrays, you need to specify multiple square brackets after the array name.
- Syntax to declare a two dimensional array
- type array_name = new type[rows][cols];
- For Example:

```
int multidim[] = new int[3][5];
```

Multi-dimensional Arrays

To store data in more dimensions a multi-dimensional array is used. A multi-dimensional array of dimension n is a collection of items. These items are accessed via **n** subscript expressions.

Multi-dimensional Arrays (contd)

Example

```
int [][][] x = new int [2] [3] [4];
        for(int i = 0;i <2 ;i++)
        {
                for(int j = 0;j <3 ;j++)
                {
                        for(int k = 0;k <4 ;k++)
                                {System.out.print(x[i][j][k]);}
                        System.out.println(" ");
                }
        }
```

Creating Reference Arrays

Example:

```
public class MClass{
   public MClass(int x , int y){
            System.out.println("constr" + x + y );
   }
   public static void main(String [] a){
            MClass[] p;
            p = new MClass[10];
            for ( int i=0; i<10; i++ ) {
            p[i] = new MClass(i, i+1);
            }
   }
}
```

Creating Reference Arrays (contd)

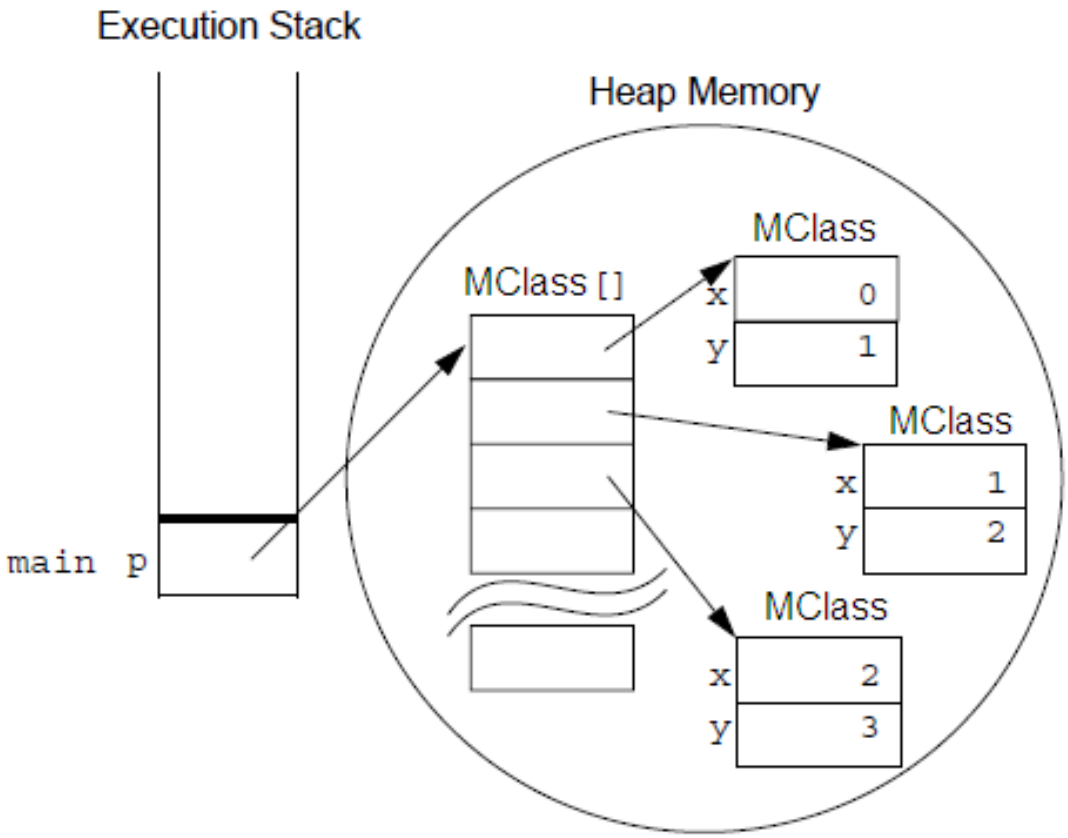

Array Bounds

All array index begin at 0:

```
public void disp()
{

        Int [] x = new int[5];
     for (int i = 0; i < x.length; i++)
    {
       System.out.println(x[i]);
    }
}
```

Enhanced for Loop

Enhanced for loop can be used for iterating over arrays:

```
public void disp()
{
    int x = new int[5];
     for ( int i : x )
     {
     System.out.println(i);
      }
}
```

The for loop can be read as *for each* x *in i*.

Array Resizing

You cannot resize an array as it is a static data structure.

You can use the same reference variable to refer to an

entirely new array, such as:

```
int [] x = new int [5];
      x = new int[8];
```

Any Questions?