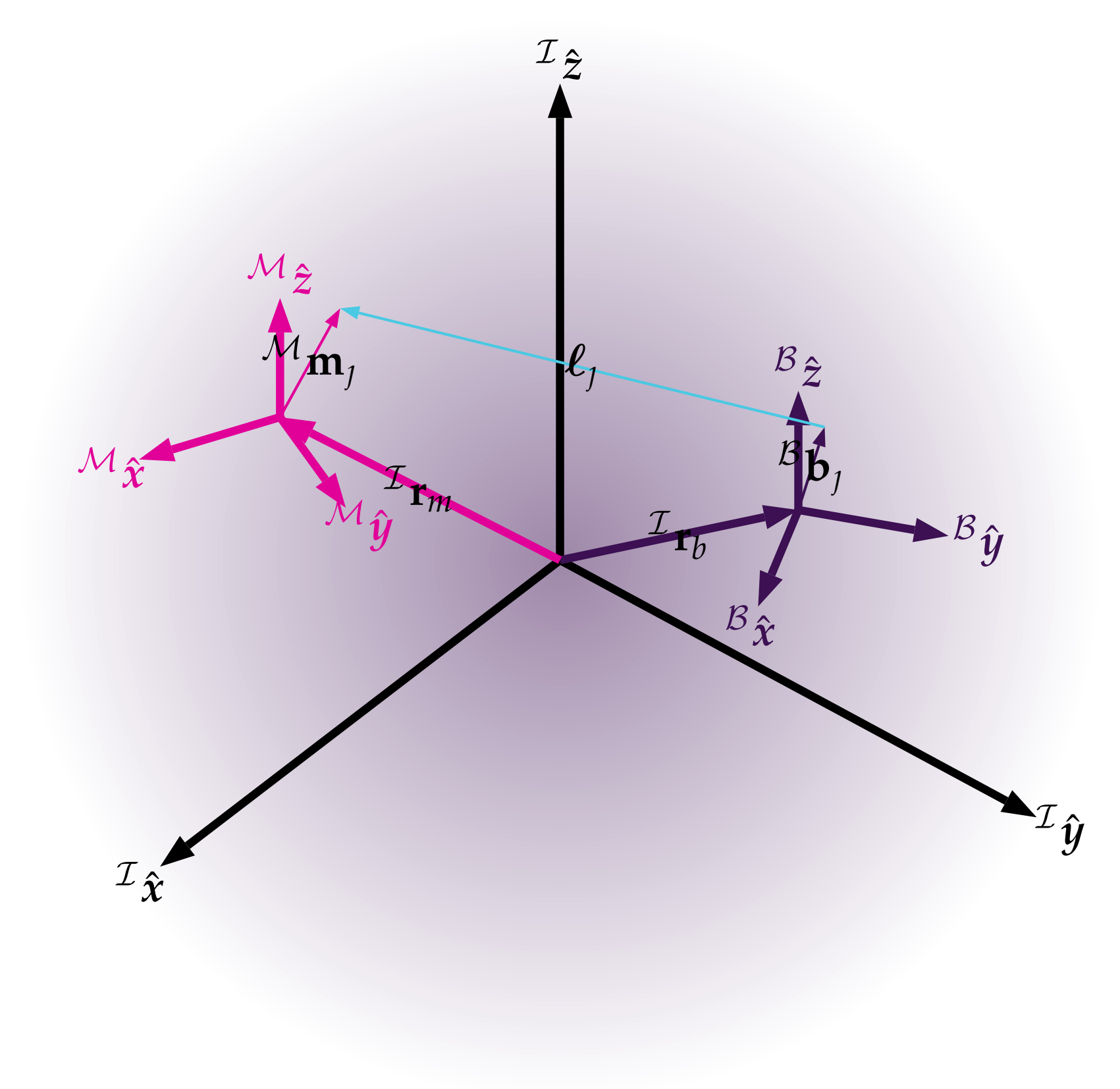
$^{\mathcal{I}}\hat{\mathbf{z}}$
$^{\mathcal{M}}\hat{\mathbf{z}}$
$^{\mathcal{M}}\mathbf{m}_j$
$\boldsymbol{\ell}_j$
$^{\mathcal{B}}\hat{\mathbf{z}}$
$^{\mathcal{B}}\mathbf{b}_j$
$^{\mathcal{M}}\hat{\mathbf{x}}$
$^{\mathcal{I}}\mathbf{r}_m$
$^{\mathcal{M}}\hat{\mathbf{y}}$
$^{\mathcal{I}}\mathbf{r}_b$
$^{\mathcal{B}}\hat{\mathbf{y}}$
$^{\mathcal{B}}\hat{\mathbf{x}}$
$^{\mathcal{I}}\hat{\mathbf{y}}$
$^{\mathcal{I}}\hat{\mathbf{x}}$

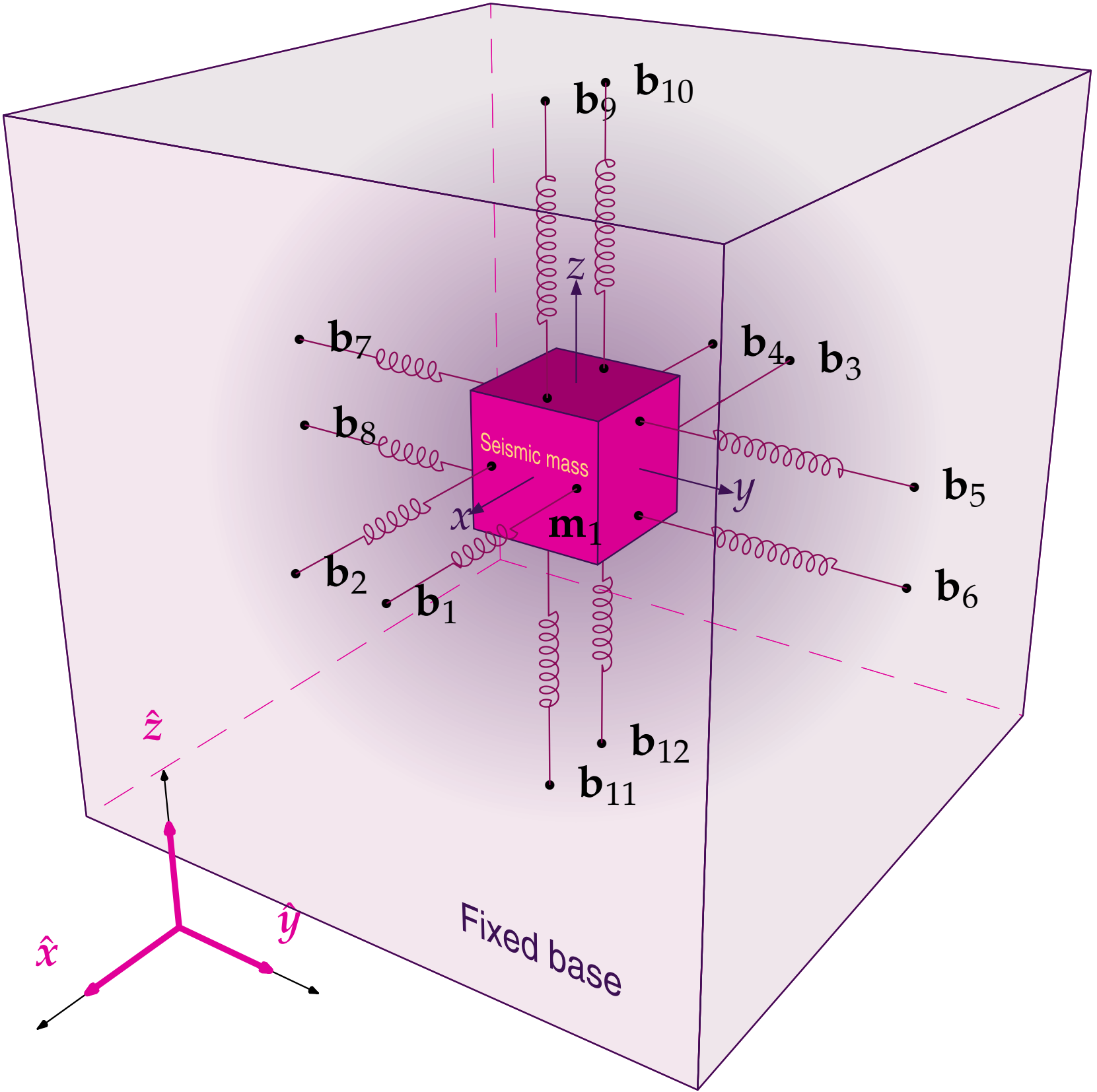
$\mathbf{b}_{10}$
$\mathbf{b}_9$
z
$\mathbf{b}_7$
$\mathbf{b}_4$
$\mathbf{b}_3$
$\mathbf{b}_8$
Seismic mass
$\mathbf{b}_5$
y
x
$\mathbf{m}_1$
$\mathbf{b}_2$
$\mathbf{b}_1$
$\mathbf{b}_6$
$\mathbf{b}_{12}$
$\mathbf{b}_{11}$
$\hat{z}$
$\hat{y}$
$\hat{x}$
Fixed base

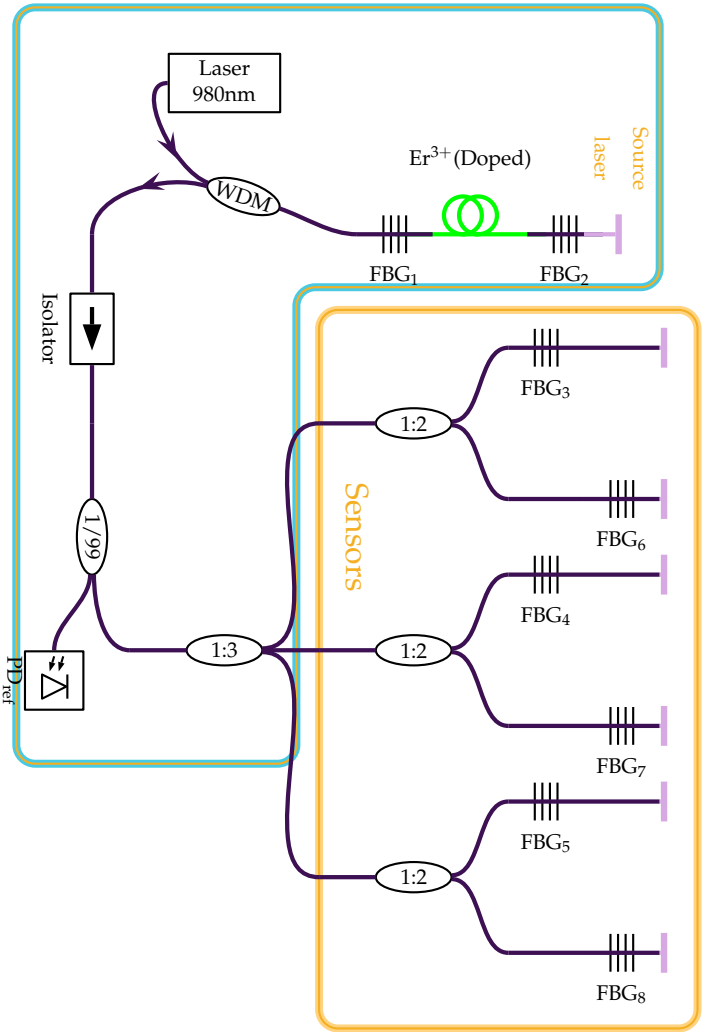
Laser
980nm
WDM
Er3+(Doped)
Source
laser
FBG1
FBG2
Isolator
1/99
PDref
1:3
Sensors
1:2
1:2
1:2
FBG3
FBG6
FBG4
FBG7
FBG5
FBG8

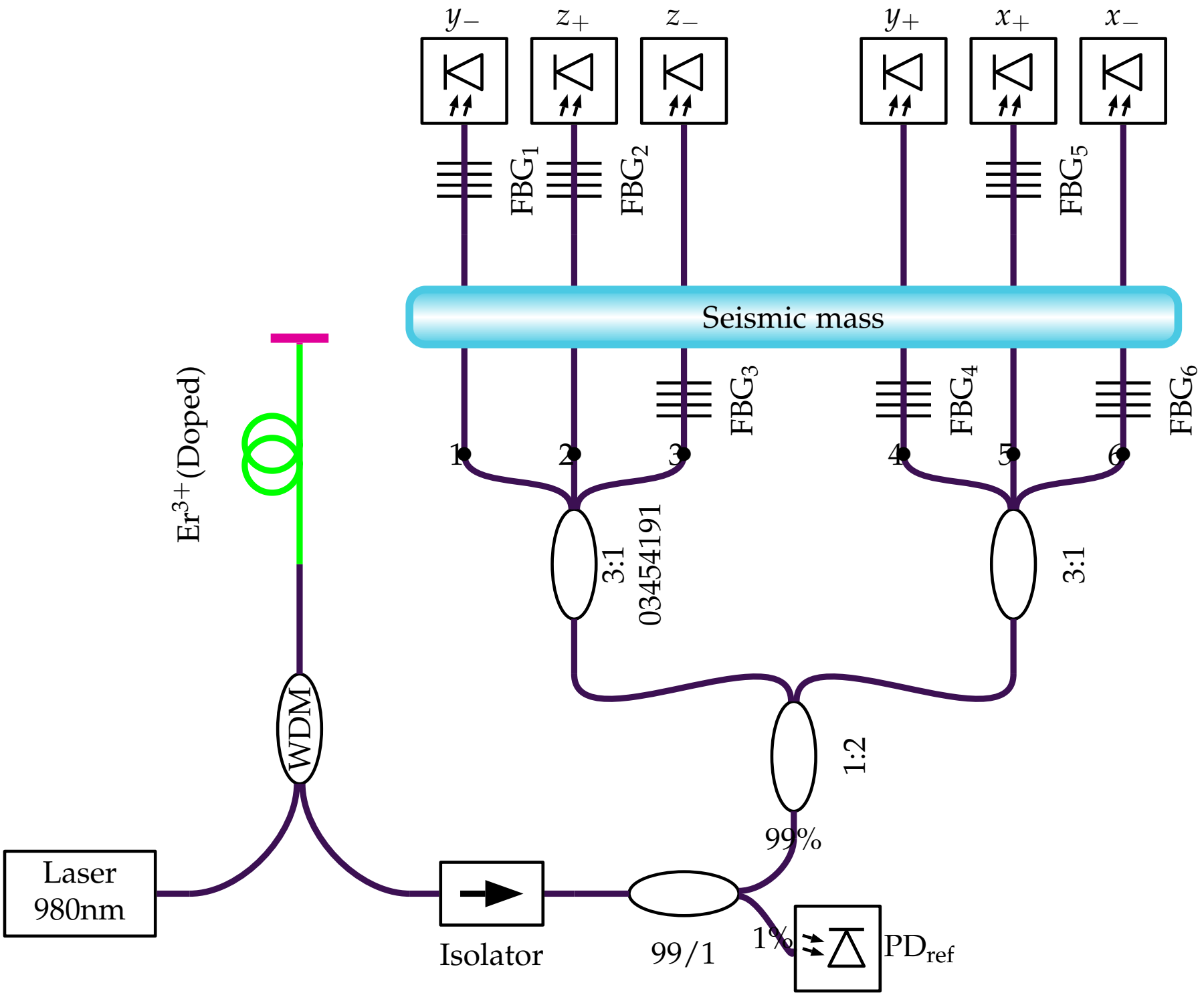
y_-
z_+
z_-
y_+
x_+
x_-
FBG_1
FBG_2
FBG_5
Seismic mass
FBG_3
FBG_4
FBG_6
1
2
3
4
5
6
3:1
03454191
3:1
1:2
99%
Er^{3+}(Doped)
WDM
Laser
980nm
Isolator
99/1
1%
PD_{ref}

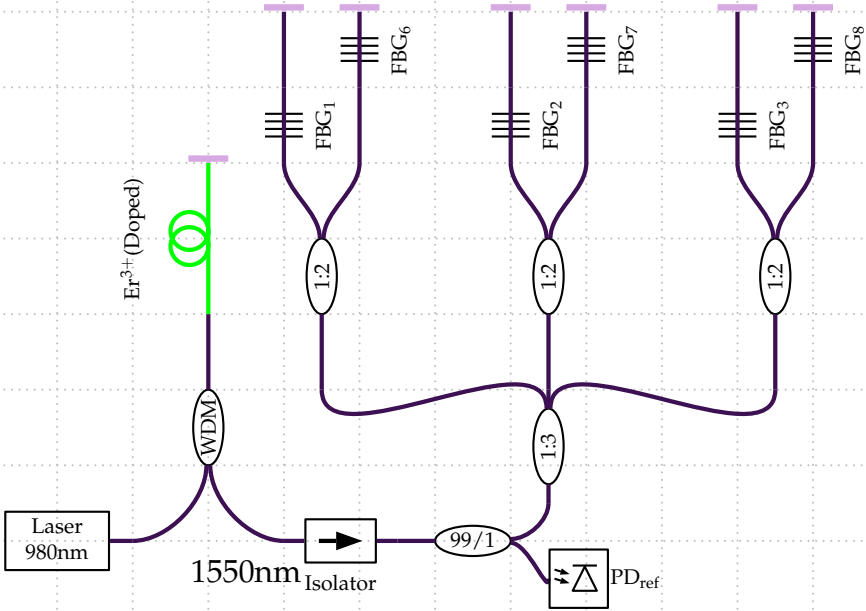
FBG6
FBG7
FBG8
FBG1
FBG2
FBG3
Er3+(Doped)
1:2
1:2
1:2
WDM
1:3
Laser
980nm
1550nm
Isolator
99/1
PDref

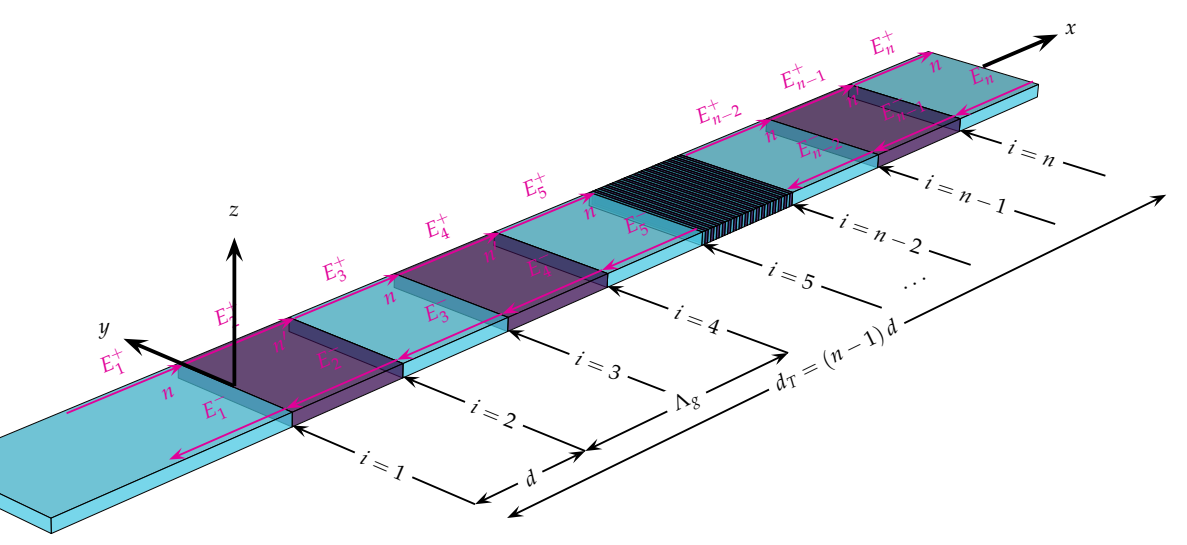
x
y
z
E_1^+
E_1^-
E_2^+
E_2^-
E_3^+
E_3^-
E_4^+
E_4^-
E_5^+
E_5^-
E_{n-2}^+
E_{n-2}^-
E_{n-1}^+
E_{n-1}^-
E_n^+
E_n^-
n
$i = 1$
$i = 2$
$i = 3$
$i = 4$
$i = 5$
$\cdots$
$i = n - 2$
$i = n - 1$
$i = n$
d
Λ_g
$d_T = (n-1)d$

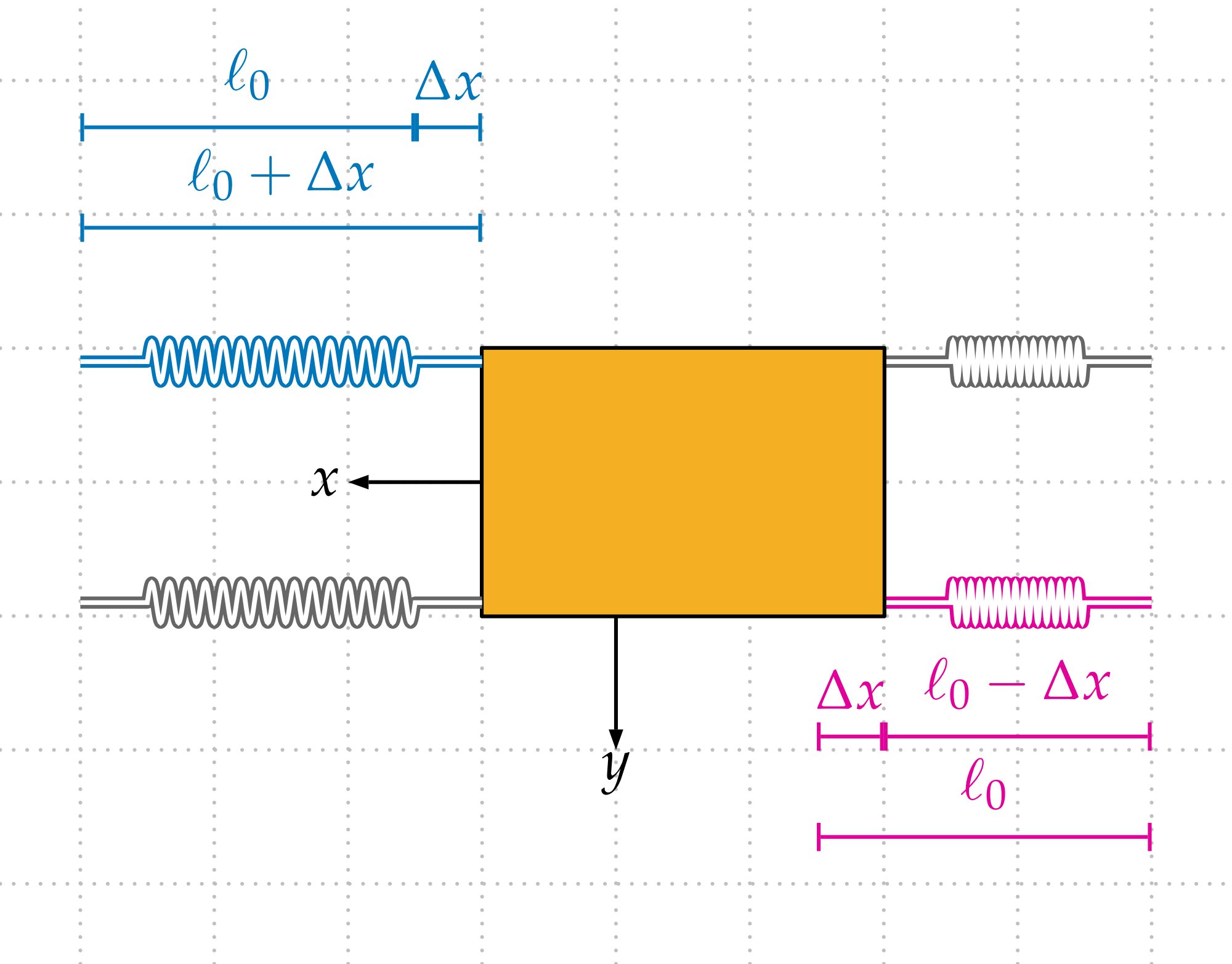
ℓ_0
Δx
$\ell_0 + \Delta x$
x
y
Δx
$\ell_0 - \Delta x$
ℓ_0

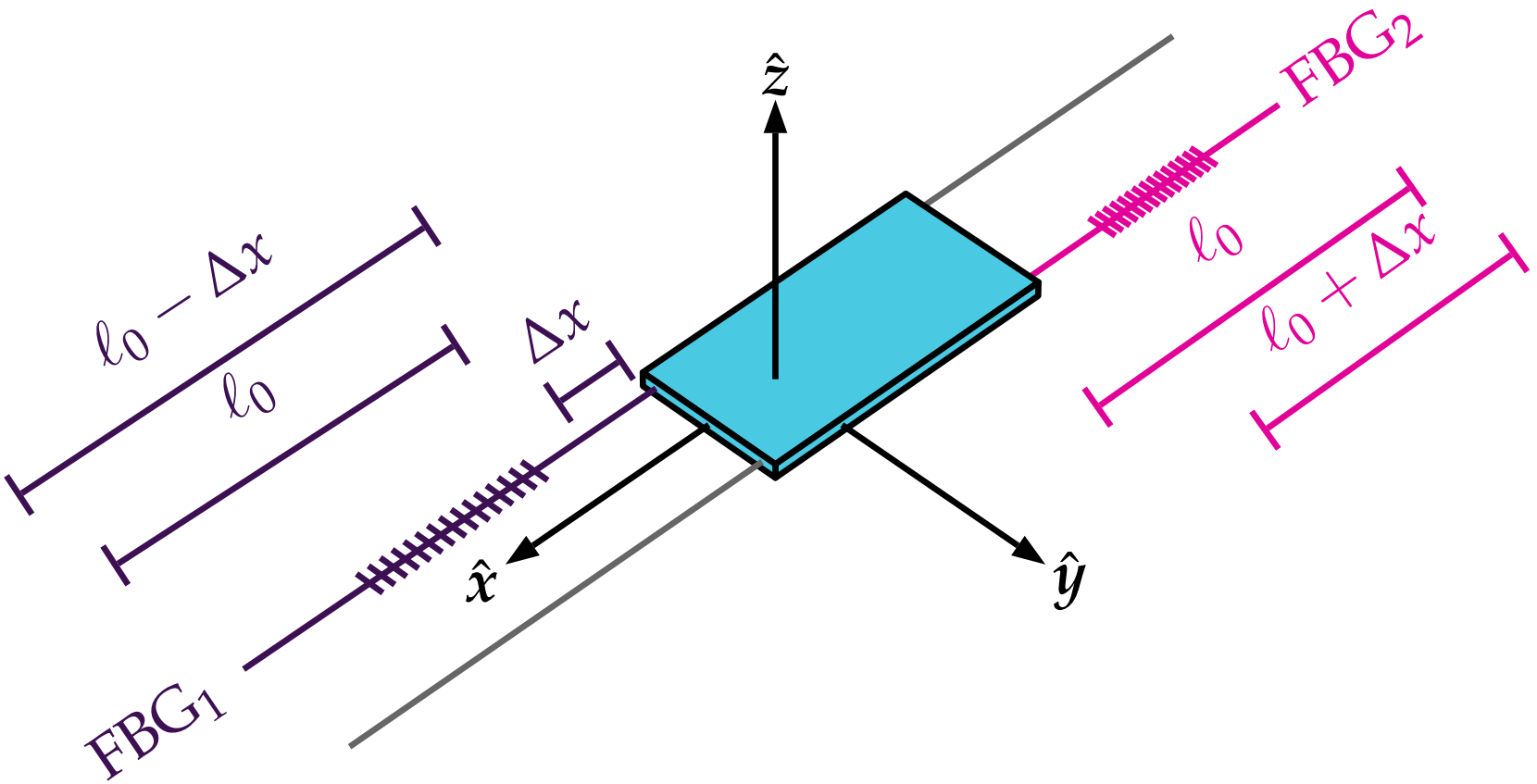
$\hat{z}$
FBG2
ℓ_0
$\ell_0 + \Delta x$
$\ell_0 - \Delta x$
ℓ_0
Δx
$\hat{x}$
$\hat{y}$
FBG1

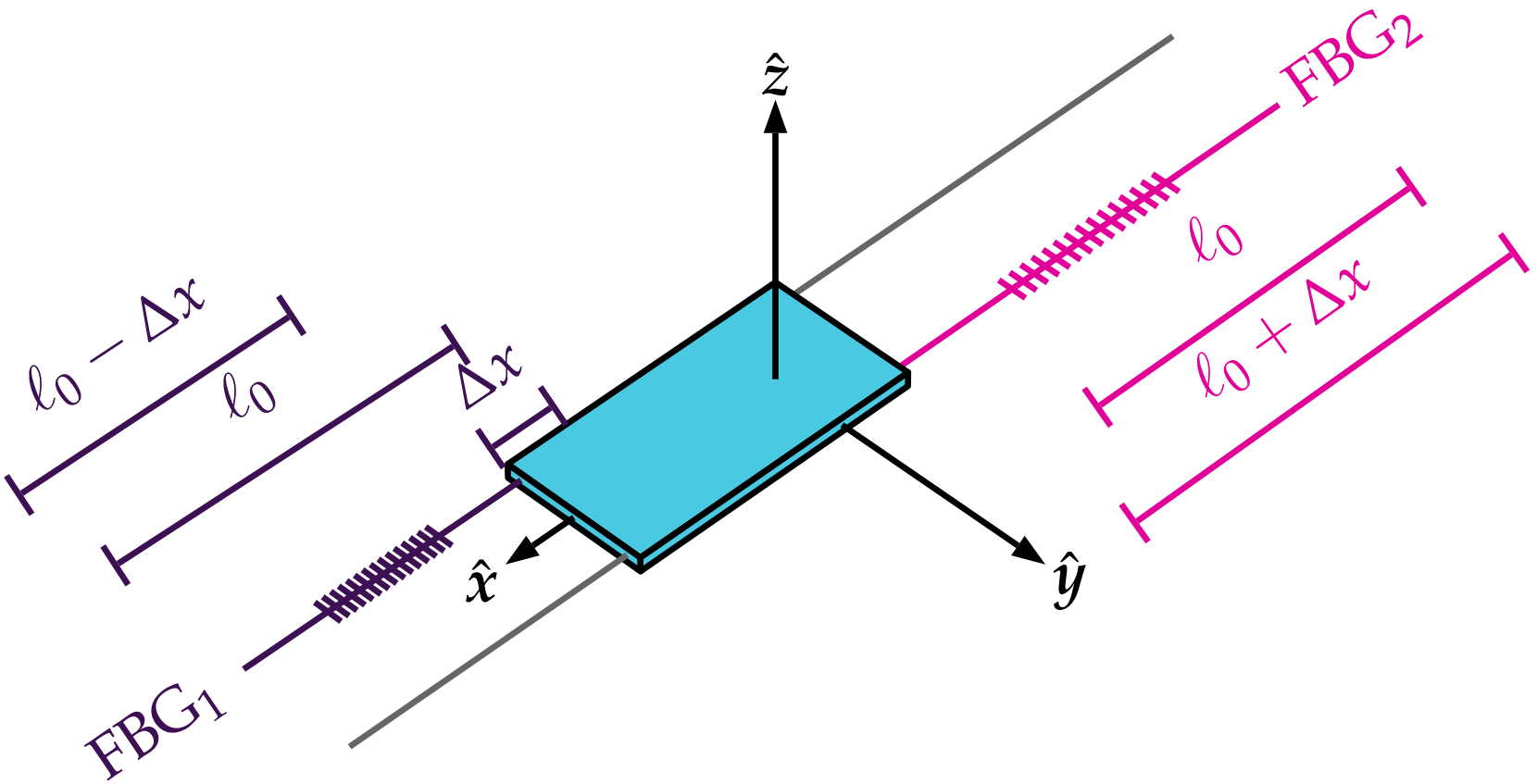
$\hat{z}$
FBG2
ℓ_0
$\ell_0 + \Delta x$
$\ell_0 - \Delta x$
ℓ_0
Δx
$\hat{x}$
$\hat{y}$
FBG1

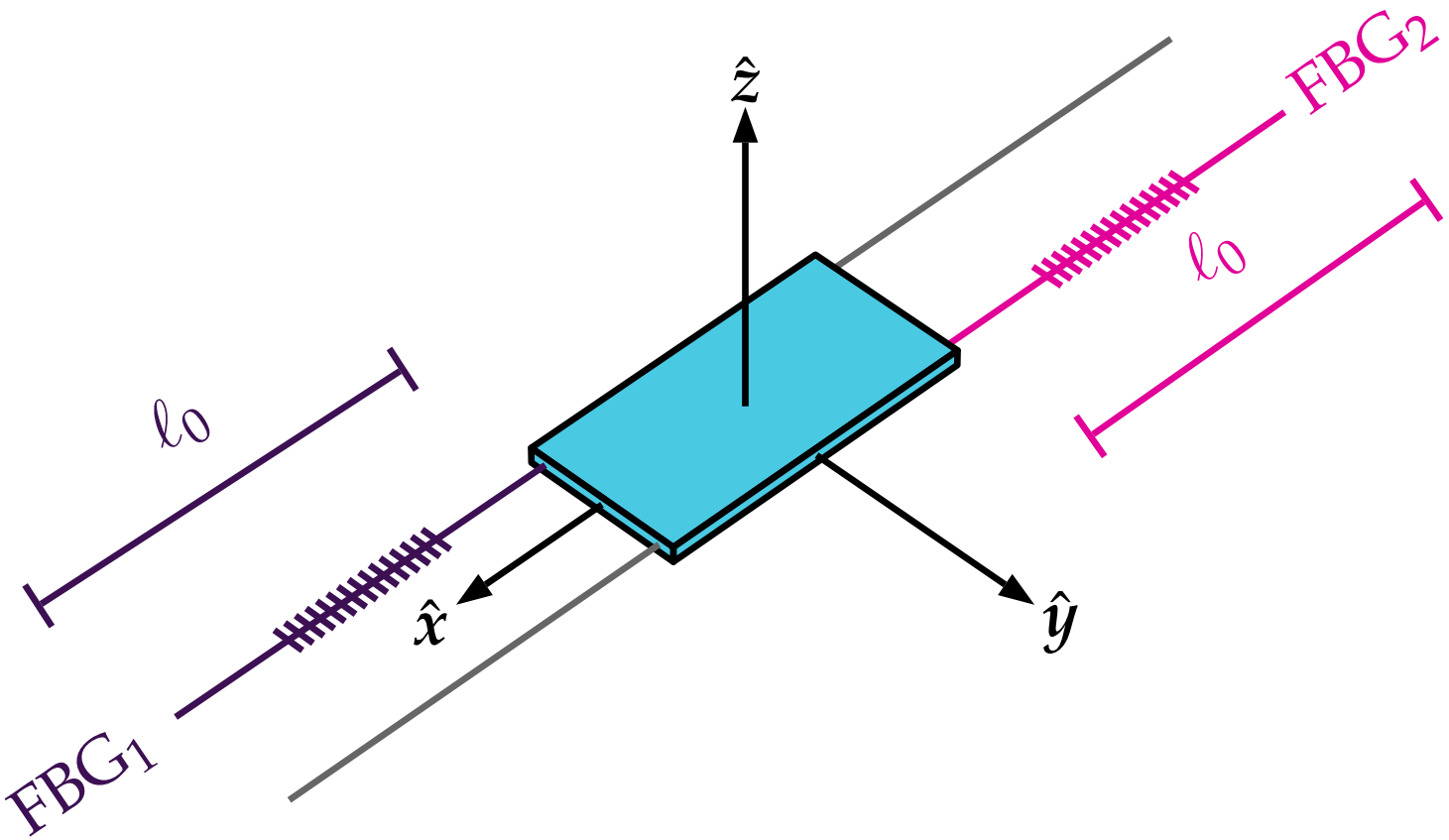
$\hat{z}$
FBG2
ℓ_0
ℓ_0
$\hat{x}$
$\hat{y}$
FBG1

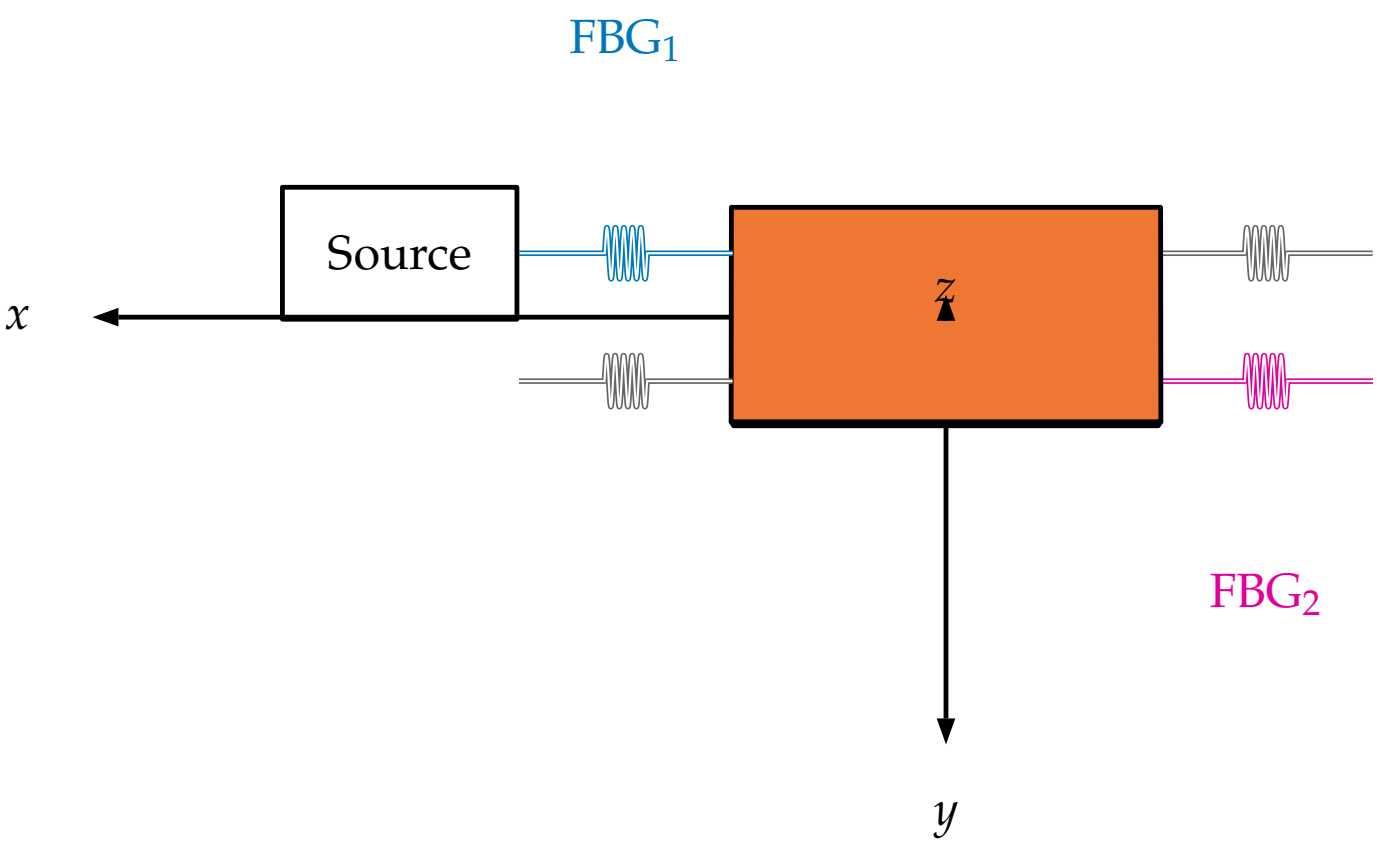
FBG$_1$
Source
x
z
y
FBG$_2$

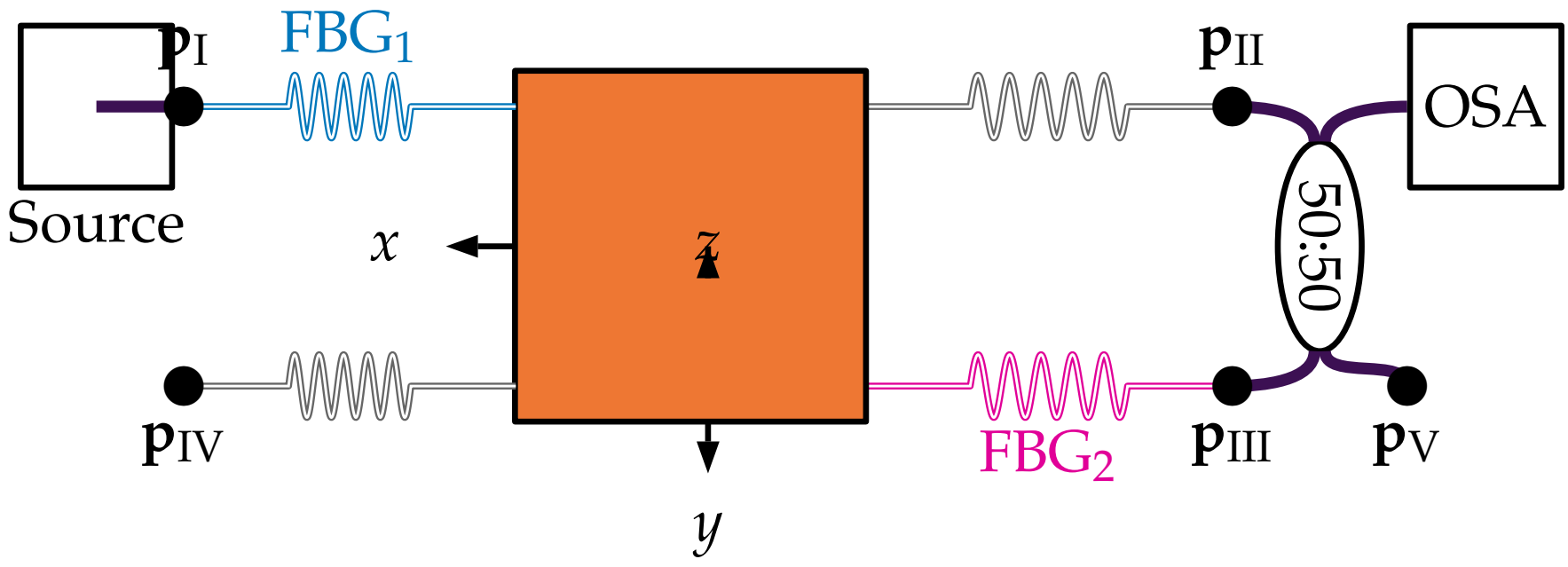
p_{I}
FBG_1
p_{II}
OSA
Source
x
z
50:50
p_{IV}
FBG_2
p_{III}
p_{V}
y

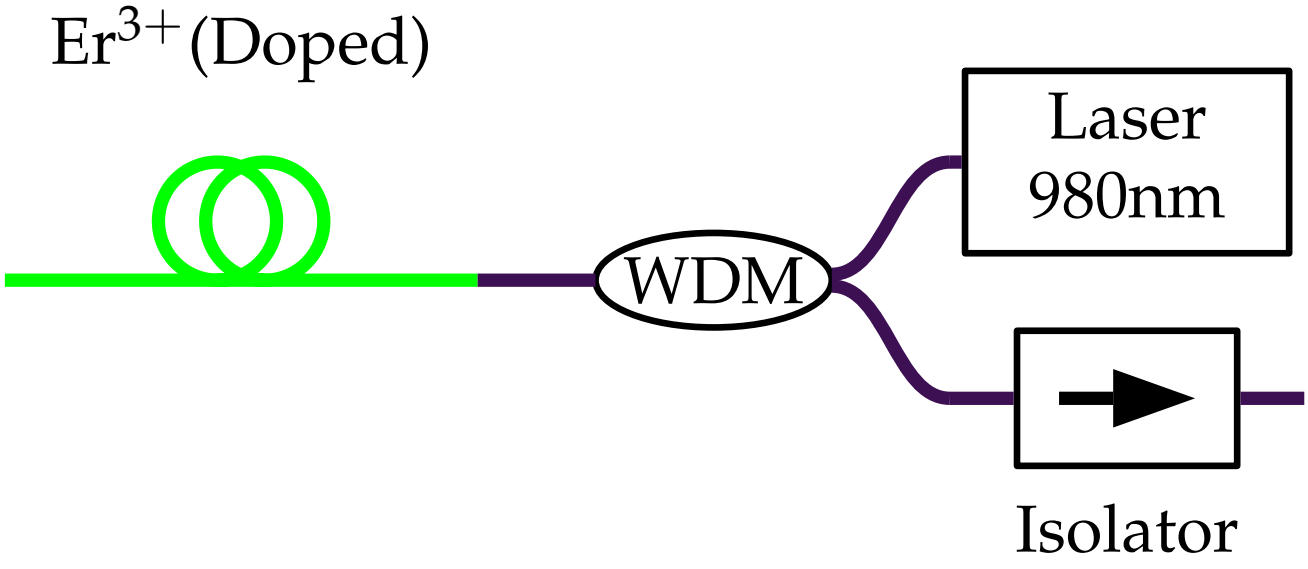
Er^{3+}(Doped)
Laser
980nm
WDM
Isolator

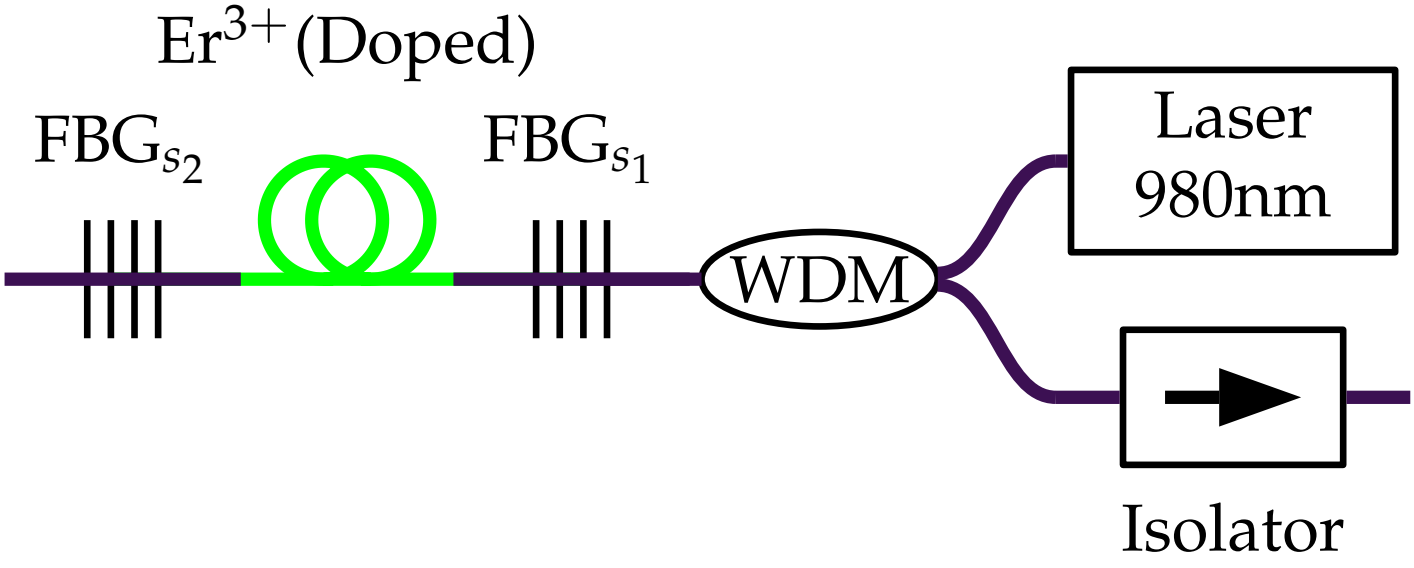
Er^{3+}(Doped)
FBG_{s_2}
FBG_{s_1}
WDM
Laser
980nm
Isolator

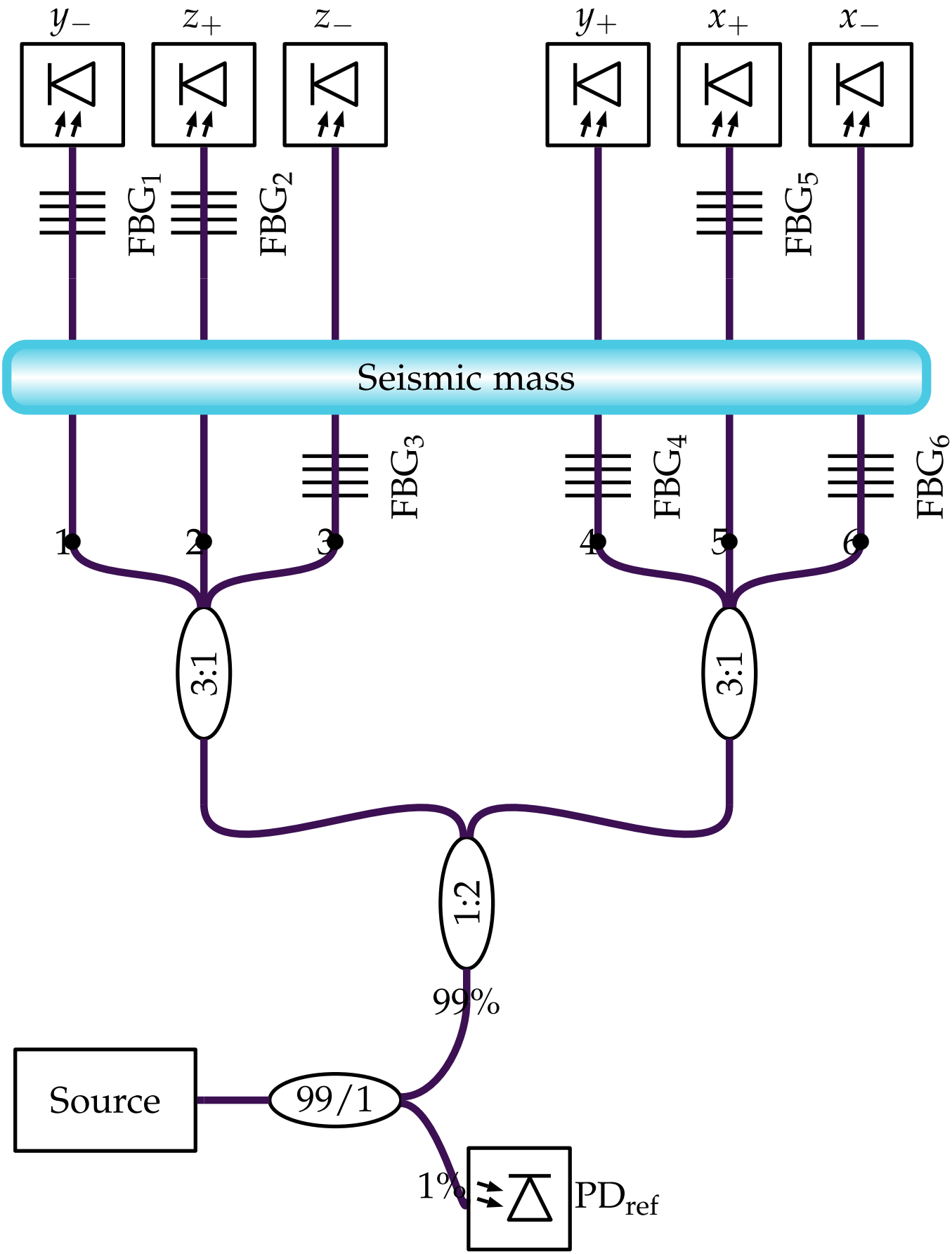
y_-
z_+
z_-
y_+
x_+
x_-
FBG$_1$
FBG$_2$
FBG$_5$
Seismic mass
FBG$_3$
FBG$_4$
FBG$_6$
1
2
3
4
5
6
3:1
3:1
1:2
99%
Source
99/1
1%
PD$_{ref}$

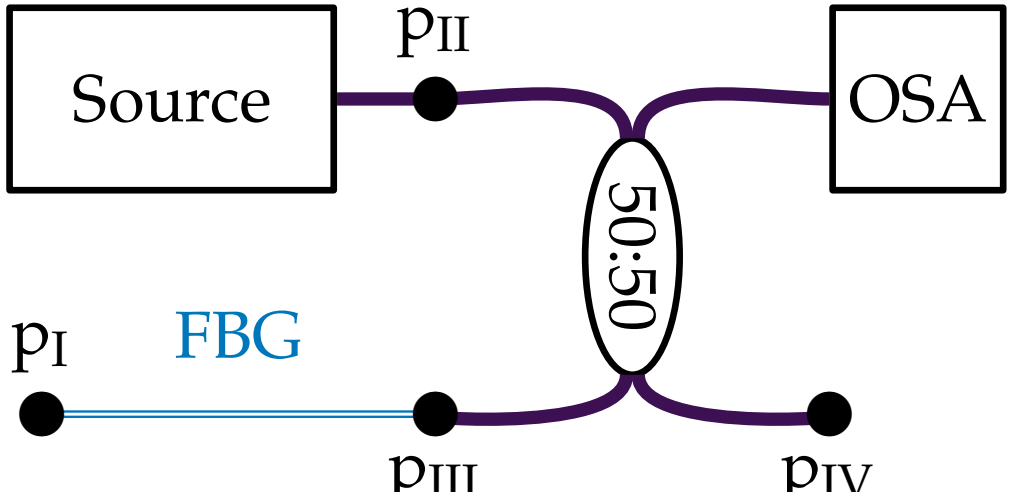
Source
pII
OSA
50:50
pI
FBG
pIII
pIV

Source
Seismic mass
FBG1

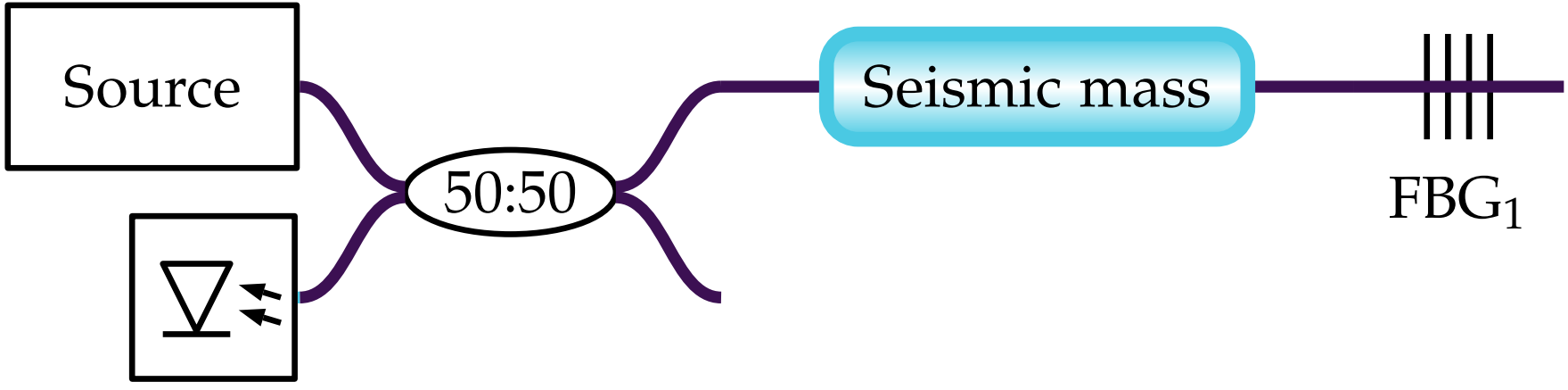
Source
50:50
Seismic mass
FBG$_1$

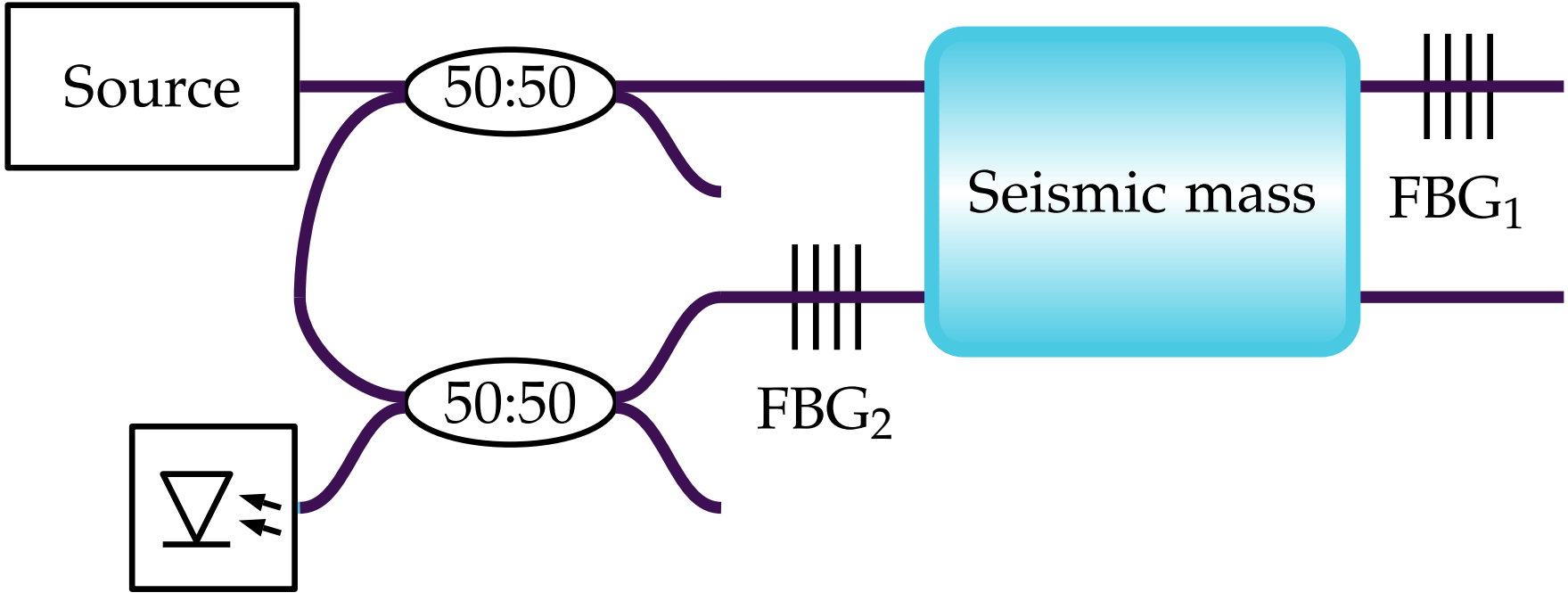
Source
50:50
Seismic mass
FBG1
FBG2
50:50

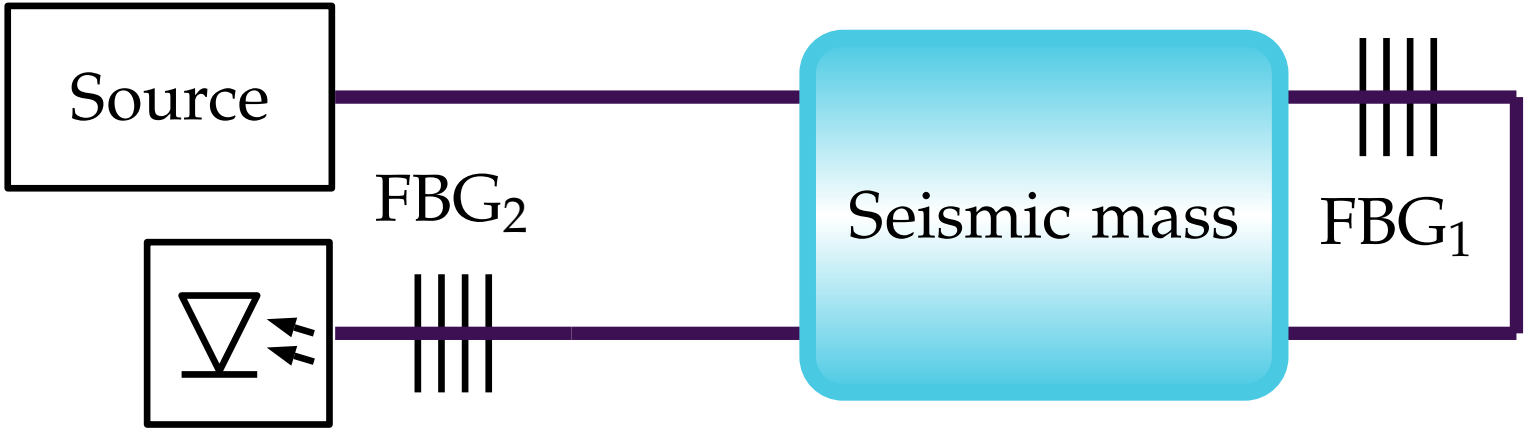
Source
FBG2
Seismic mass
FBG1

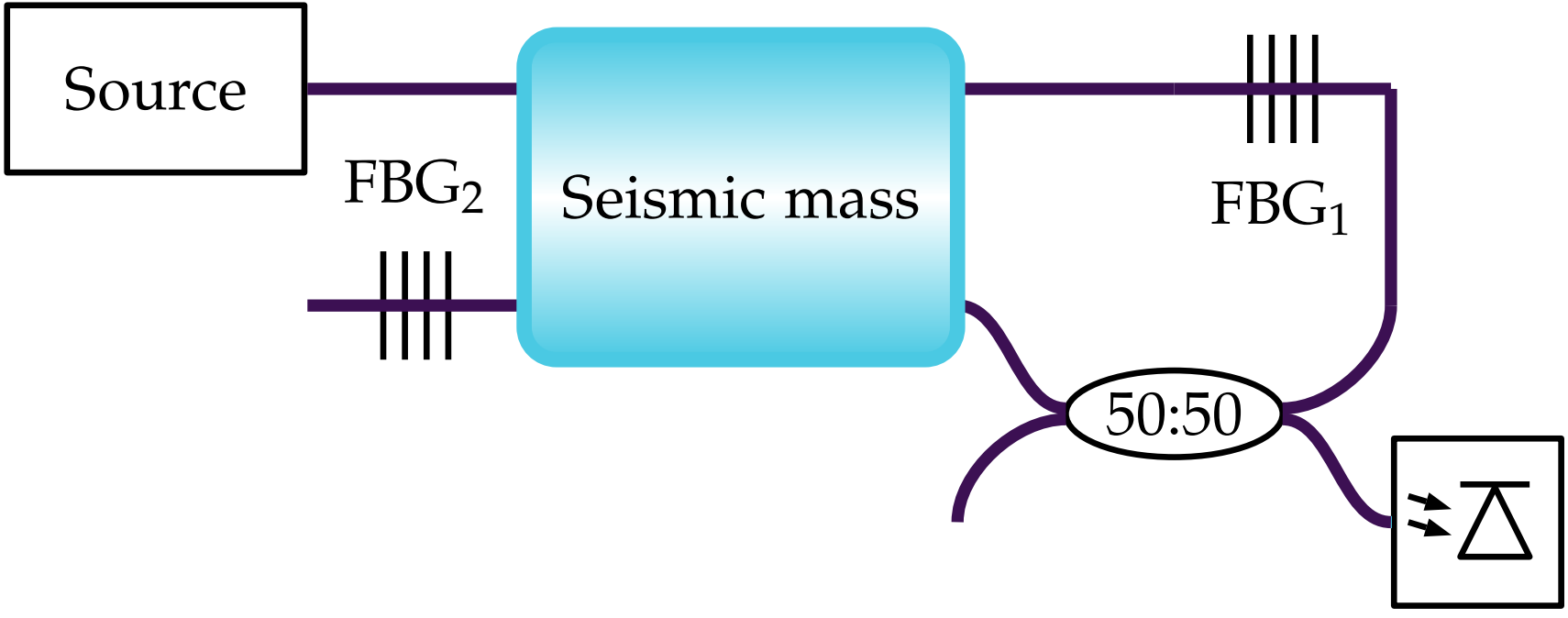
Source
FBG2
Seismic mass
FBG1
50:50

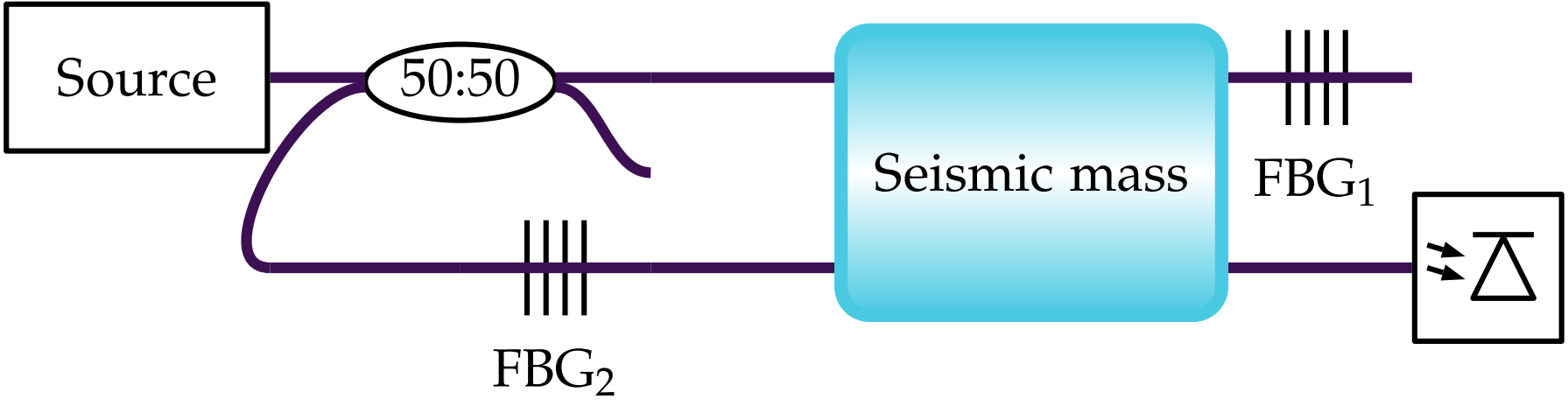
Source
50:50
Seismic mass
FBG1
FBG2

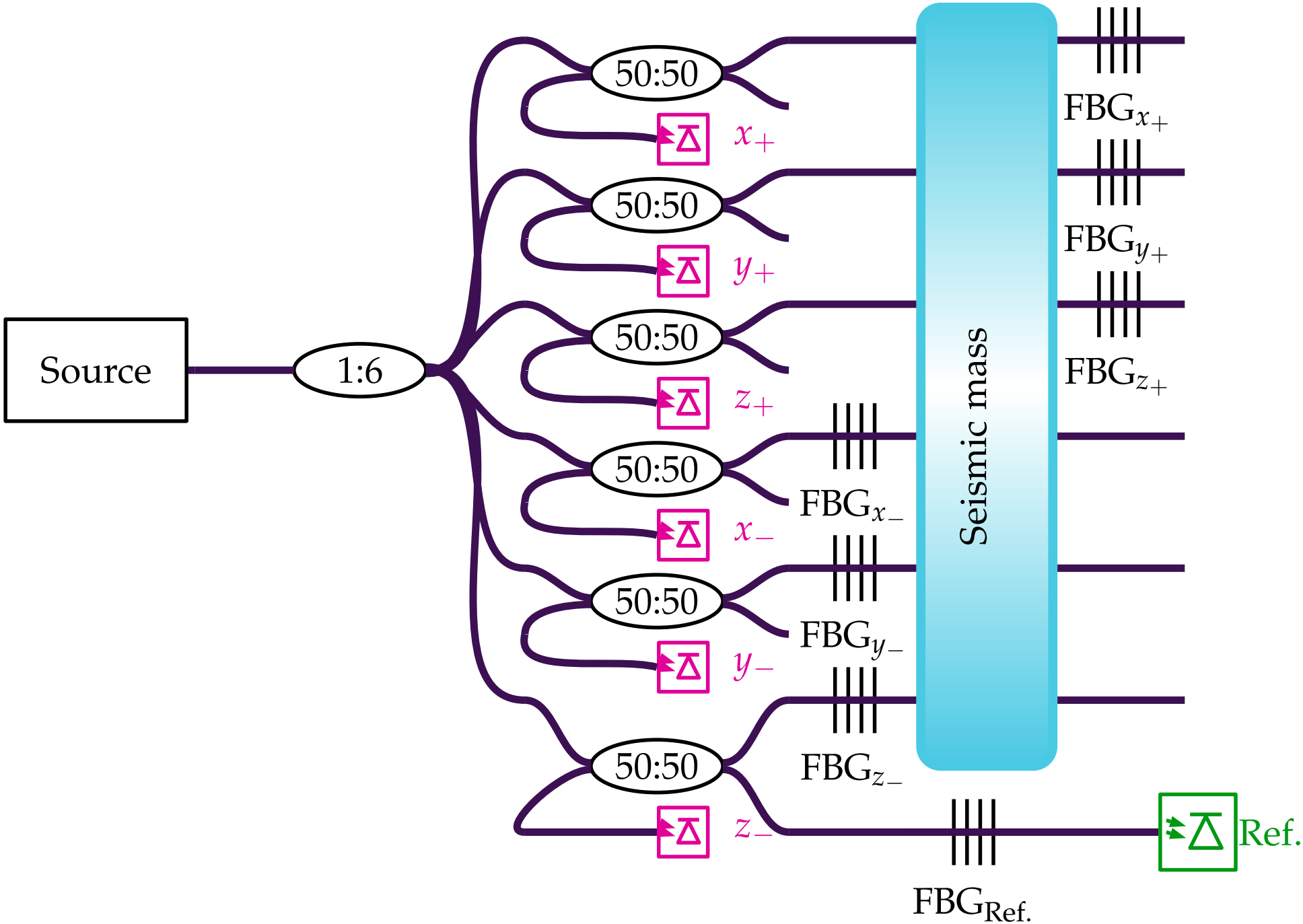
Source
1:6
50:50
50:50
50:50
50:50
50:50
50:50
x_+
y_+
z_+
x_-
y_-
z_-
Seismic mass
FBG_{x_+}
FBG_{y_+}
FBG_{z_+}
FBG_{x_-}
FBG_{y_-}
FBG_{z_-}
$\mathrm{FBG}_{\mathrm{Ref.}}$
Ref.

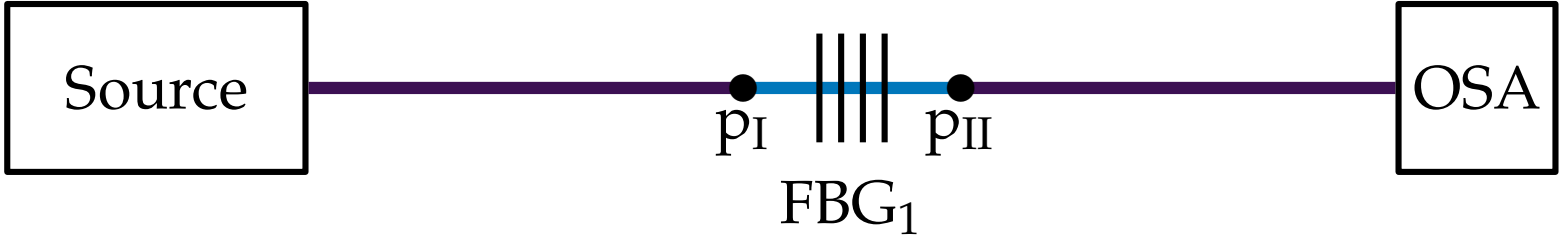
Source
OSA
p_I
p_{II}
FBG_1

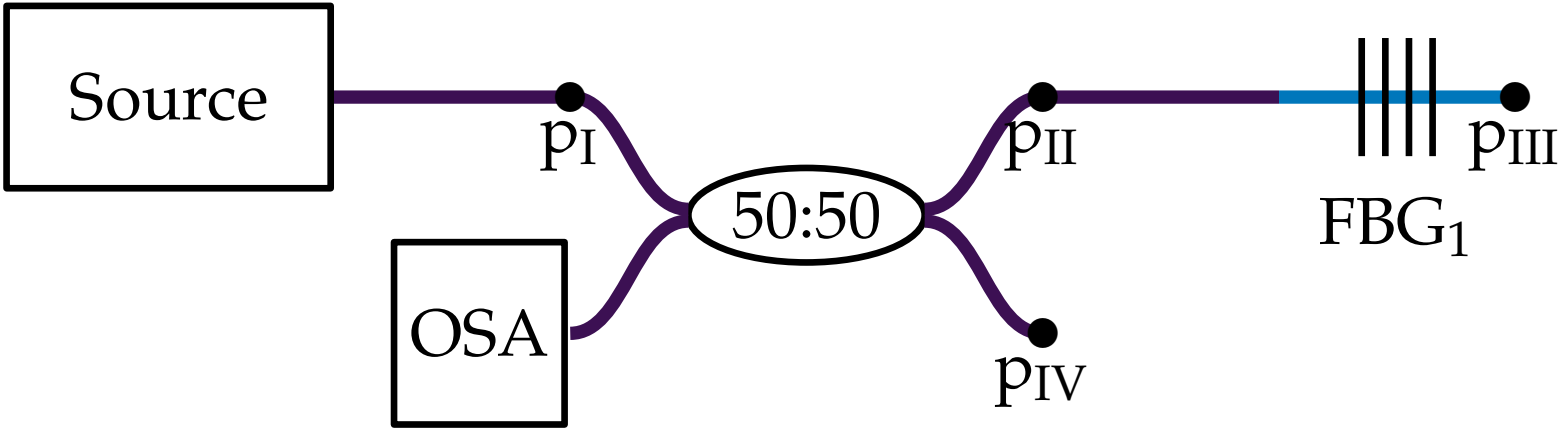
Source
pI
OSA
50:50
pII
pIV
FBG1
pIII

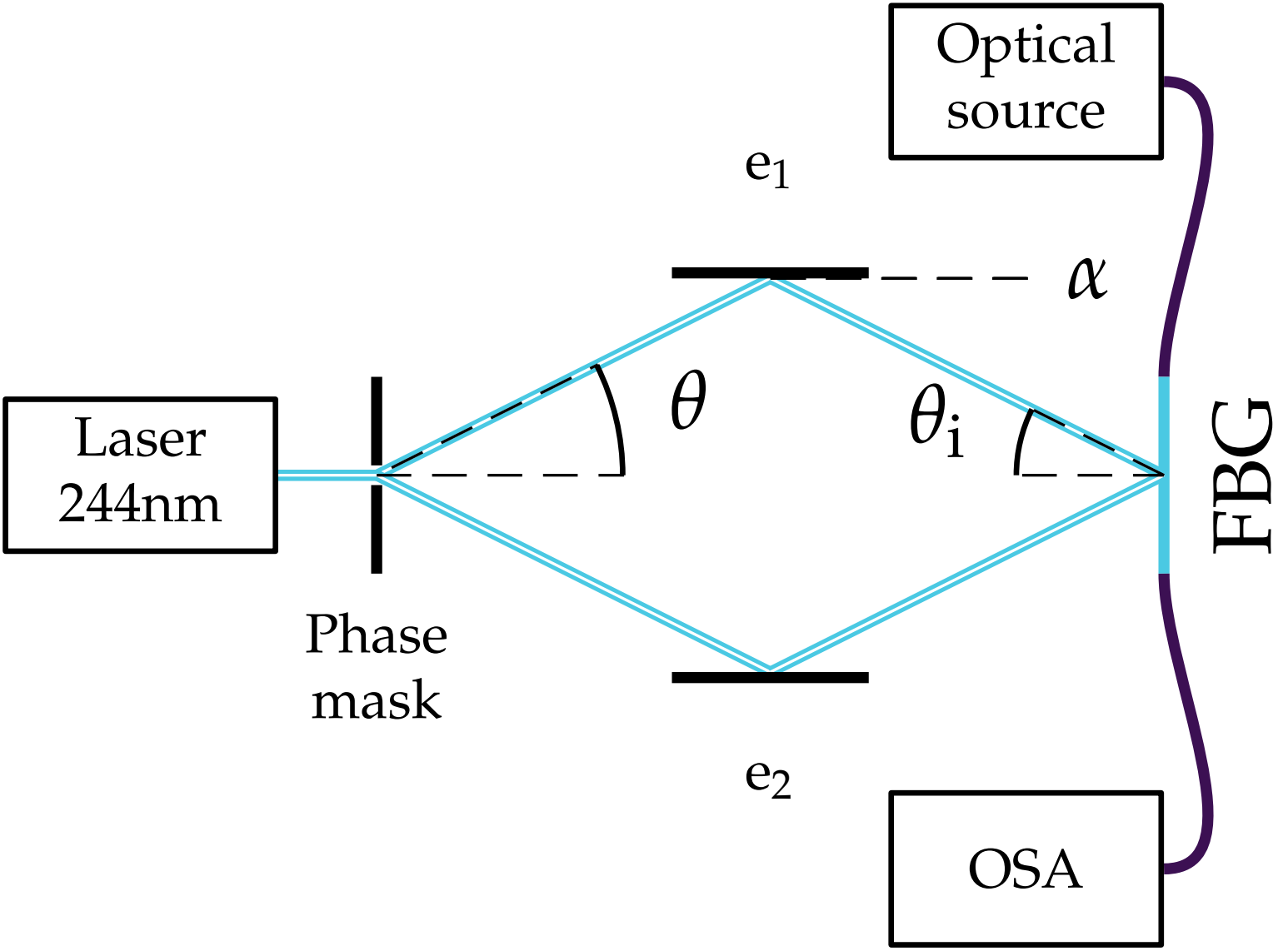
Optical source
e1
α
θ
θi
Laser 244nm
FBG
Phase mask
e2
OSA

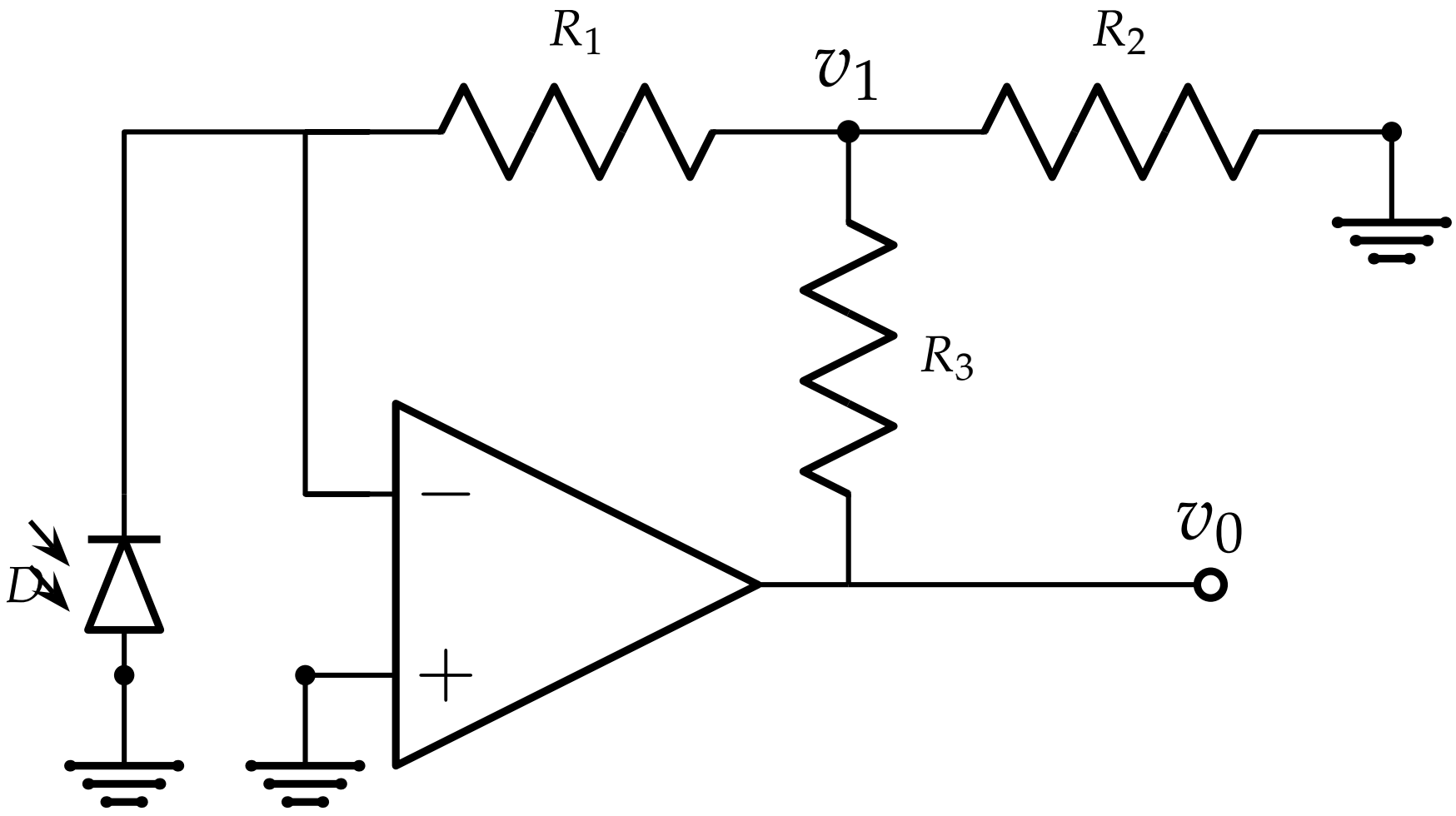
R_1
v_1
R_2
R_3
v_0
D
−
+

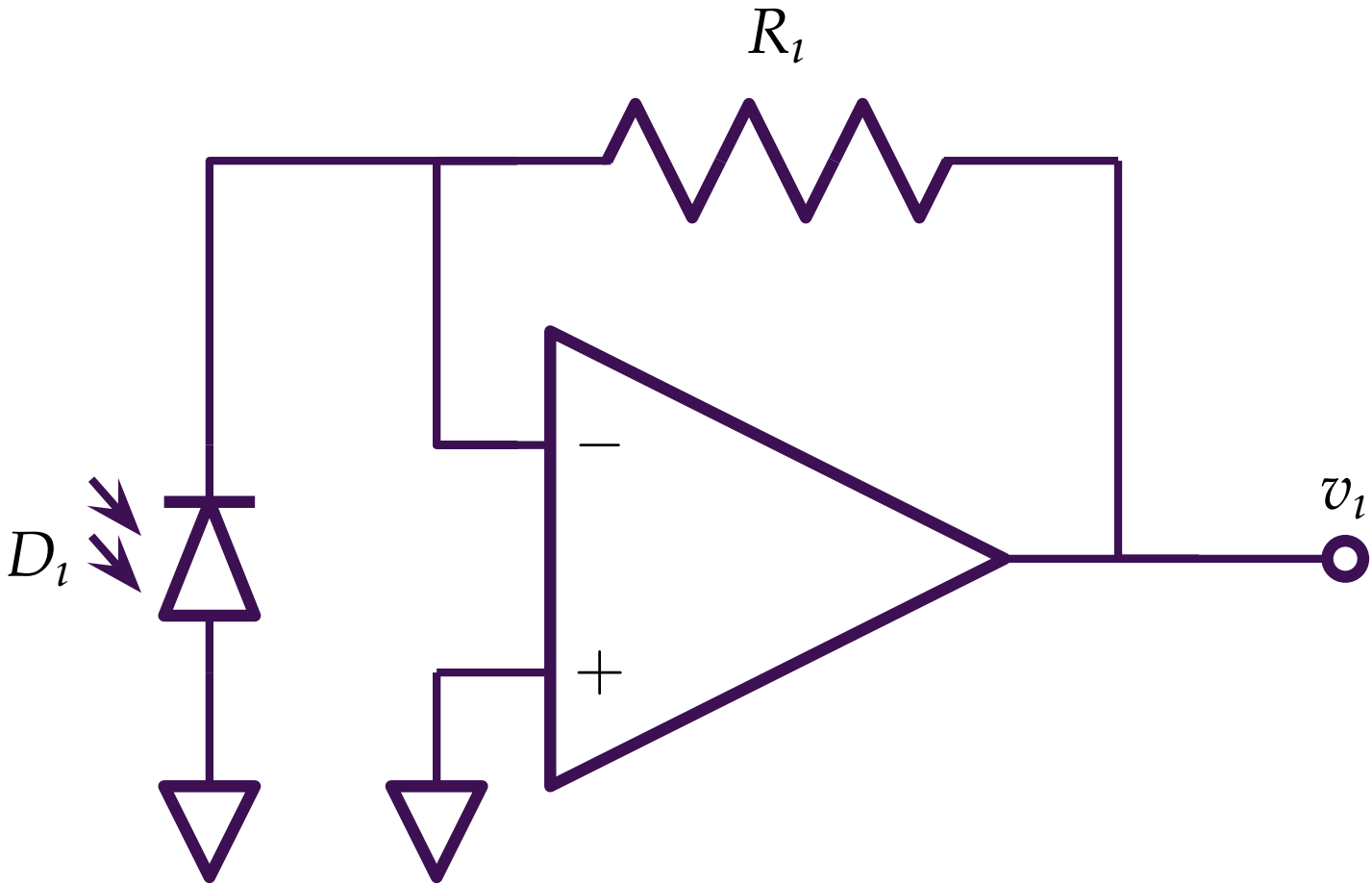
R_l
D_l
v_l
−
+

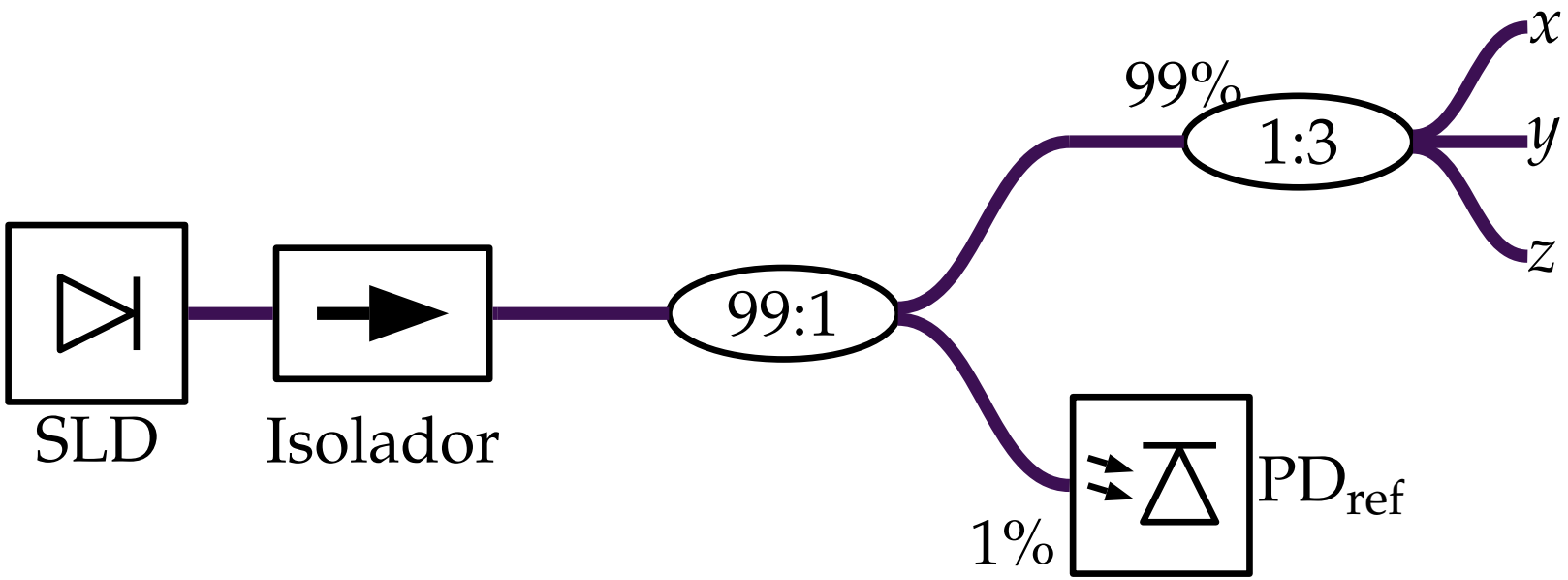
SLD
Isolador
99:1
99%
1:3
x
y
z
1%
PD$_{ref}$

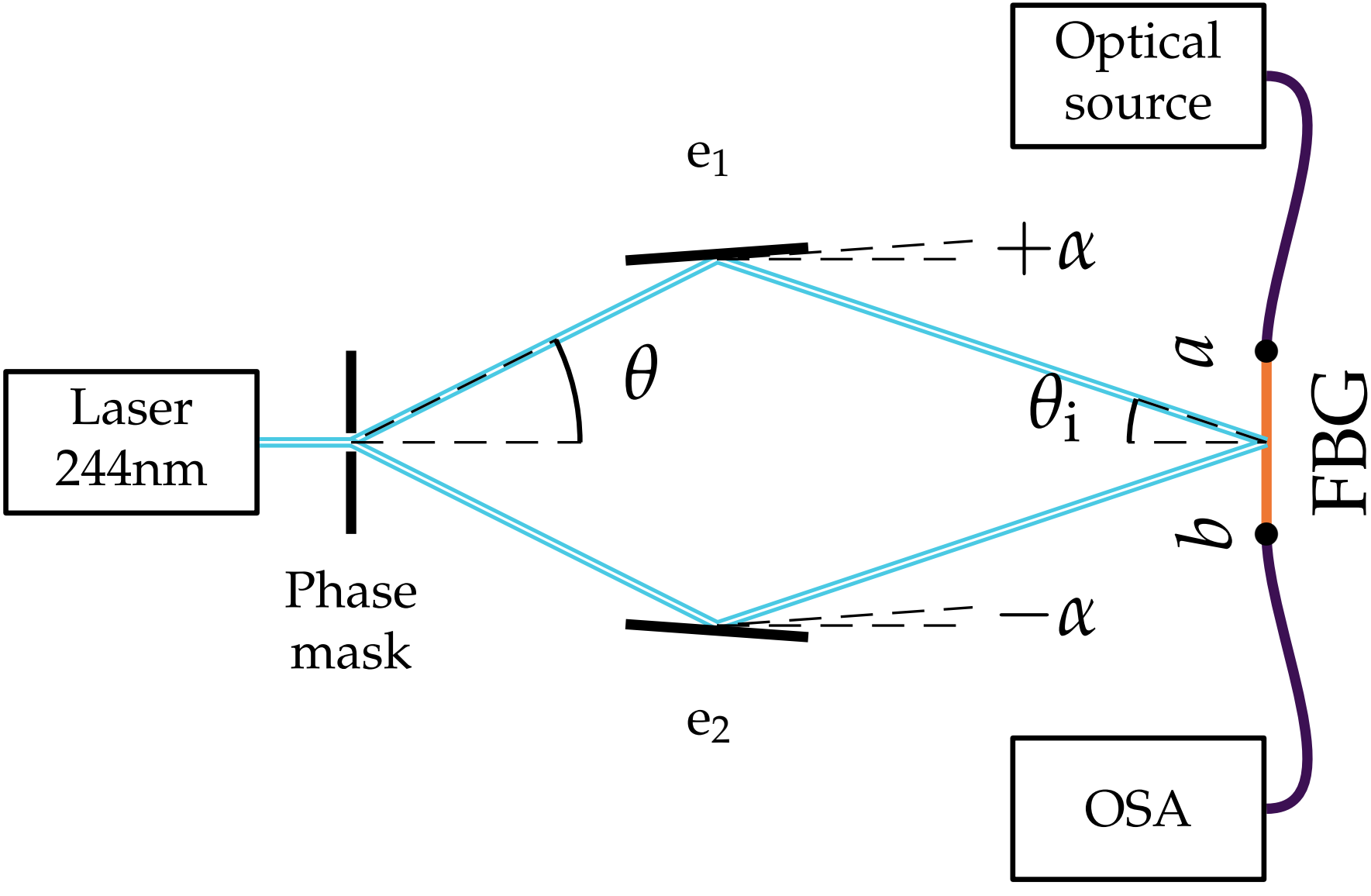
Optical source
e1
+α
θ
a
θi
FBG
Laser 244nm
b
Phase mask
−α
e2
OSA

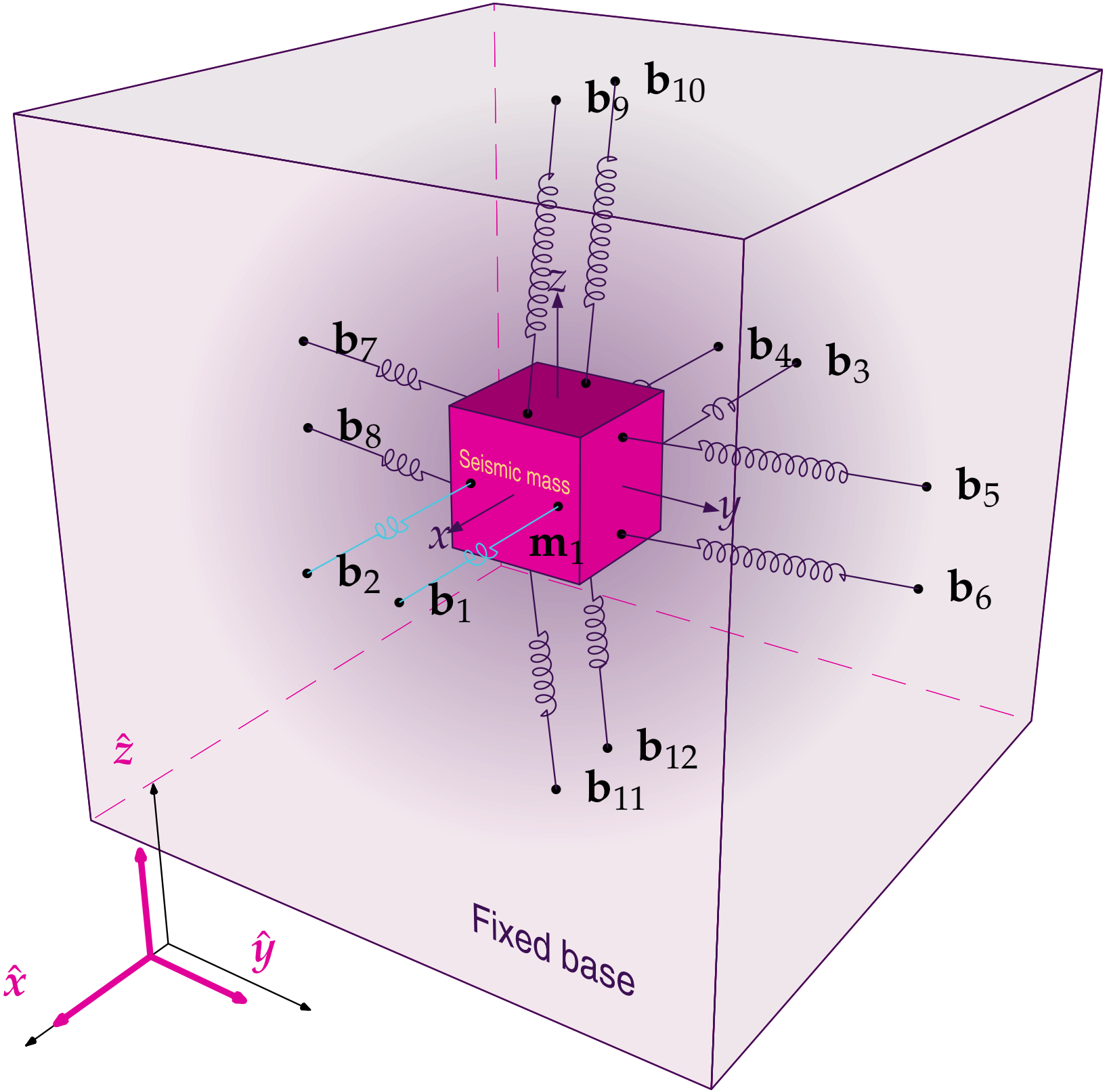
$\mathbf{b}_{10}$
$\mathbf{b}_9$
z
$\mathbf{b}_7$
$\mathbf{b}_4$
$\mathbf{b}_3$
$\mathbf{b}_8$
Seismic mass
$\mathbf{b}_5$
y
x
$\mathbf{m}_1$
$\mathbf{b}_2$
$\mathbf{b}_1$
$\mathbf{b}_6$
$\mathbf{b}_{12}$
$\mathbf{b}_{11}$
$\hat{z}$
$\hat{y}$
$\hat{x}$
Fixed base

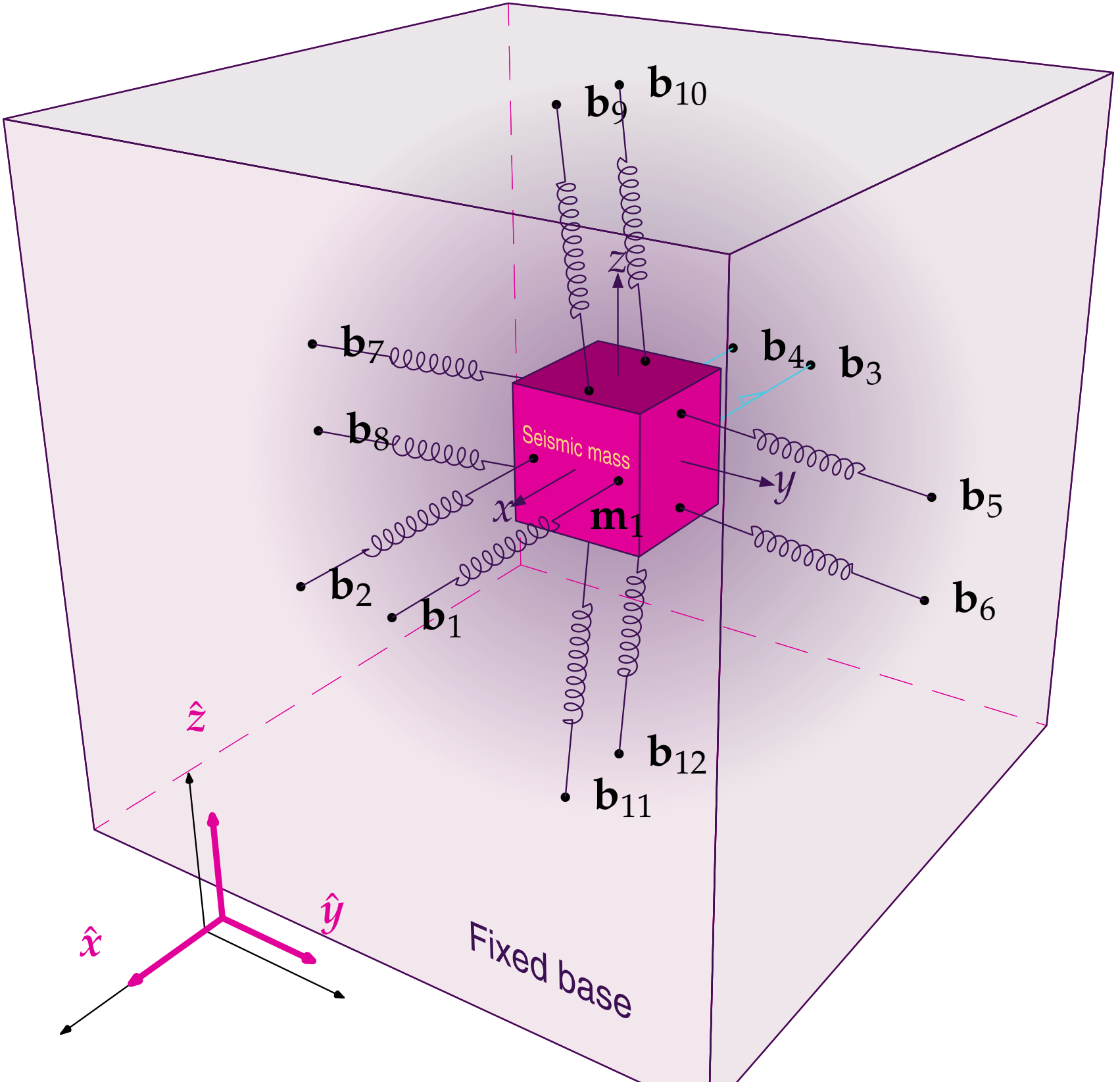
$\mathbf{b}_{10}$
$\mathbf{b}_9$
z
$\mathbf{b}_7$
$\mathbf{b}_4$
$\mathbf{b}_3$
$\mathbf{b}_8$
Seismic mass
y
$\mathbf{b}_5$
x
$\mathbf{m}_1$
$\mathbf{b}_2$
$\mathbf{b}_1$
$\mathbf{b}_6$
$\hat{z}$
$\mathbf{b}_{12}$
$\mathbf{b}_{11}$
$\hat{y}$
$\hat{x}$
Fixed base

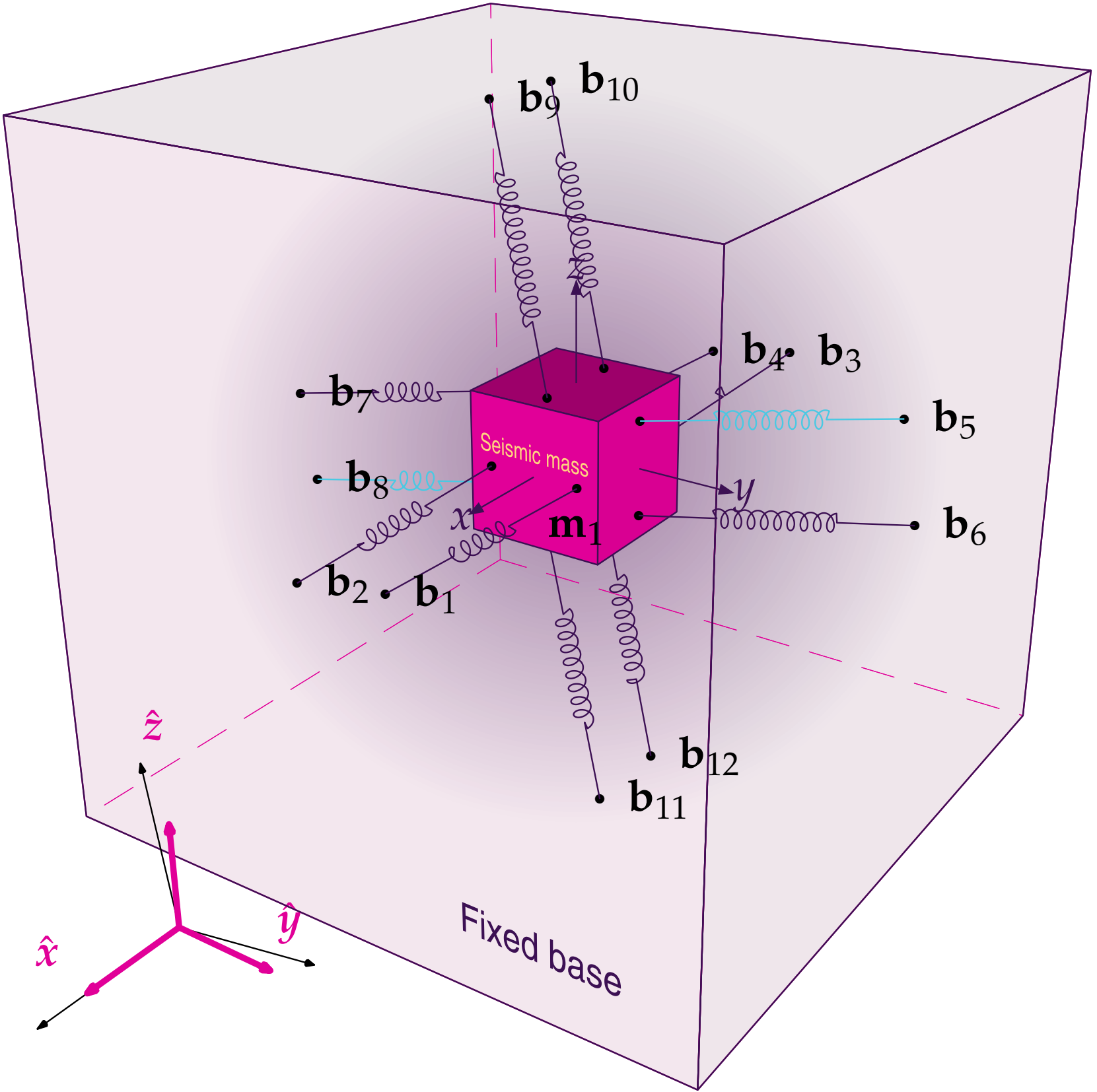
$\mathbf{b}_9$
$\mathbf{b}_{10}$
z
$\mathbf{b}_4$
$\mathbf{b}_3$
$\mathbf{b}_7$
$\mathbf{b}_5$
Seismic mass
$\mathbf{b}_8$
y
x
$\mathbf{m}_1$
$\mathbf{b}_6$
$\mathbf{b}_2$
$\mathbf{b}_1$
$\hat{z}$
$\mathbf{b}_{12}$
$\mathbf{b}_{11}$
$\hat{y}$
$\hat{x}$
Fixed base

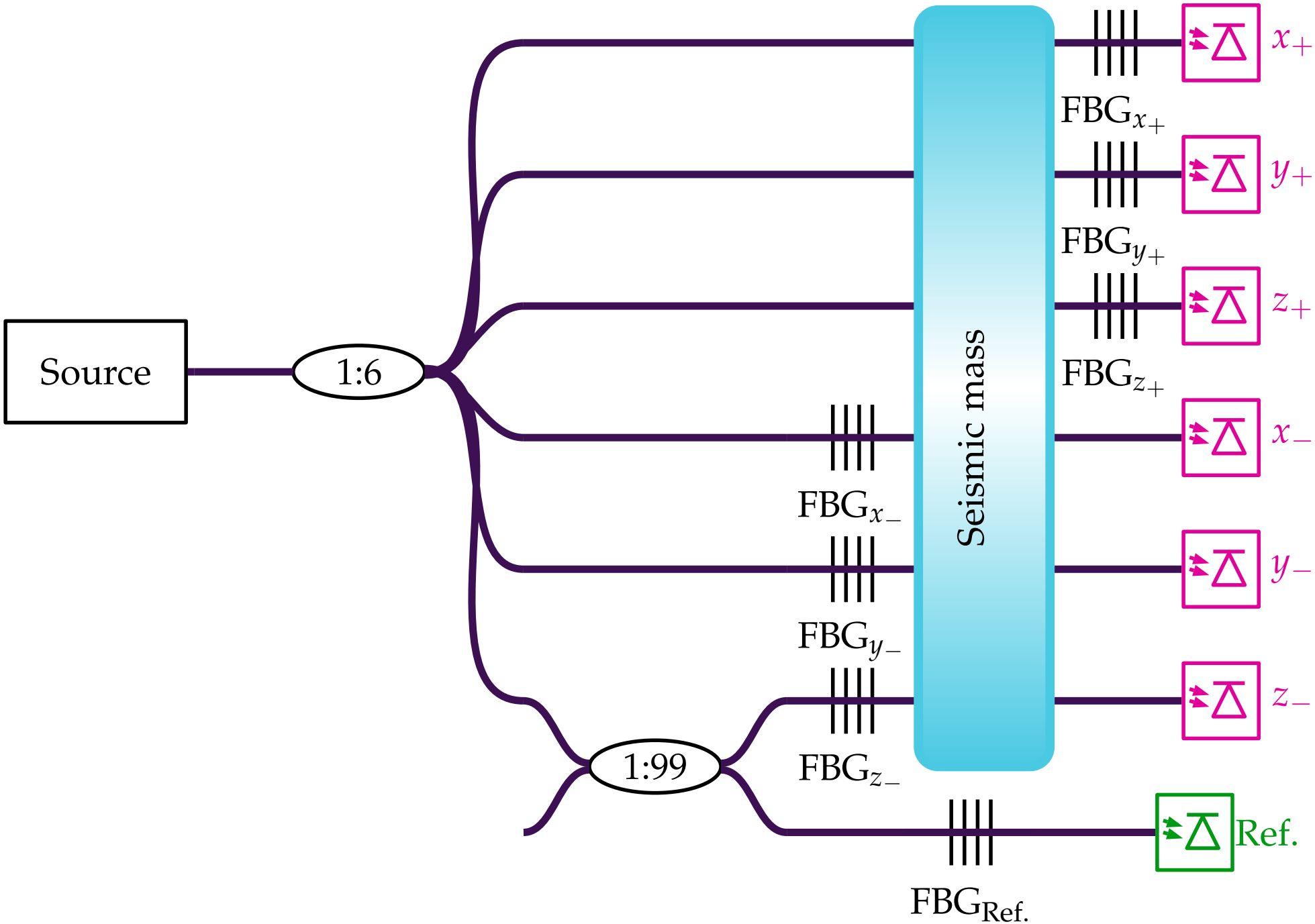
Source
1:6
1:99
Seismic mass
FBG$_{x_+}$
FBG$_{y_+}$
FBG$_{z_+}$
FBG$_{x_-}$
FBG$_{y_-}$
FBG$_{z_-}$
FBG$_{\text{Ref.}}$
x_+
y_+
z_+
x_-
y_-
z_-
Ref.

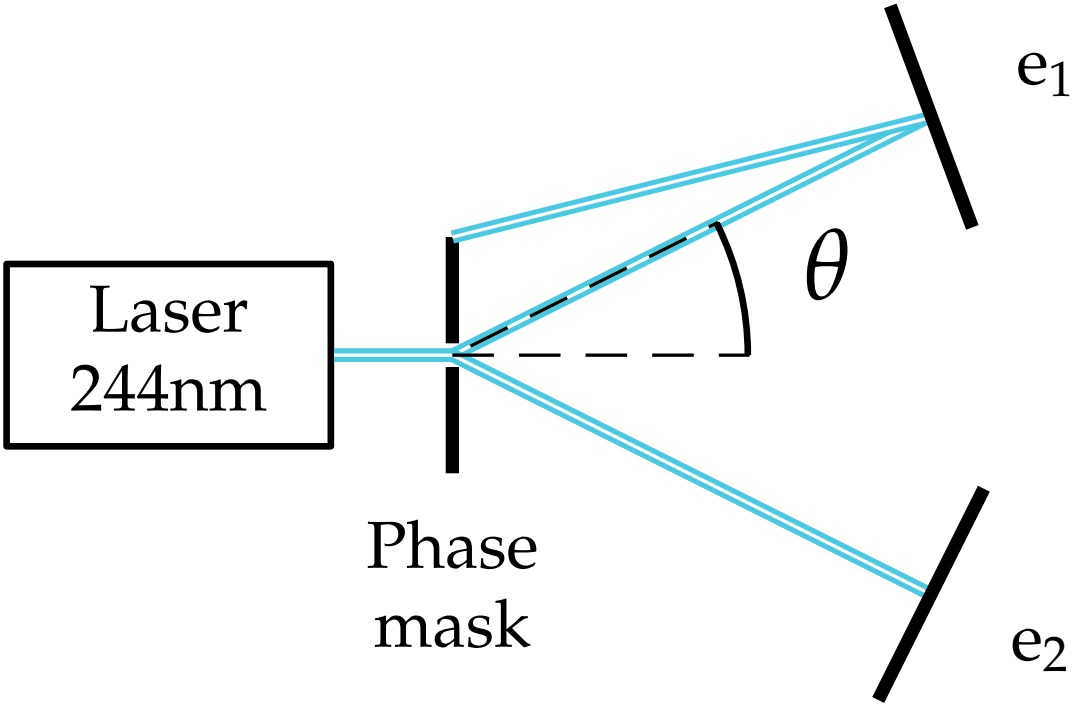
Laser
244nm
Phase
mask
θ
e1
e2

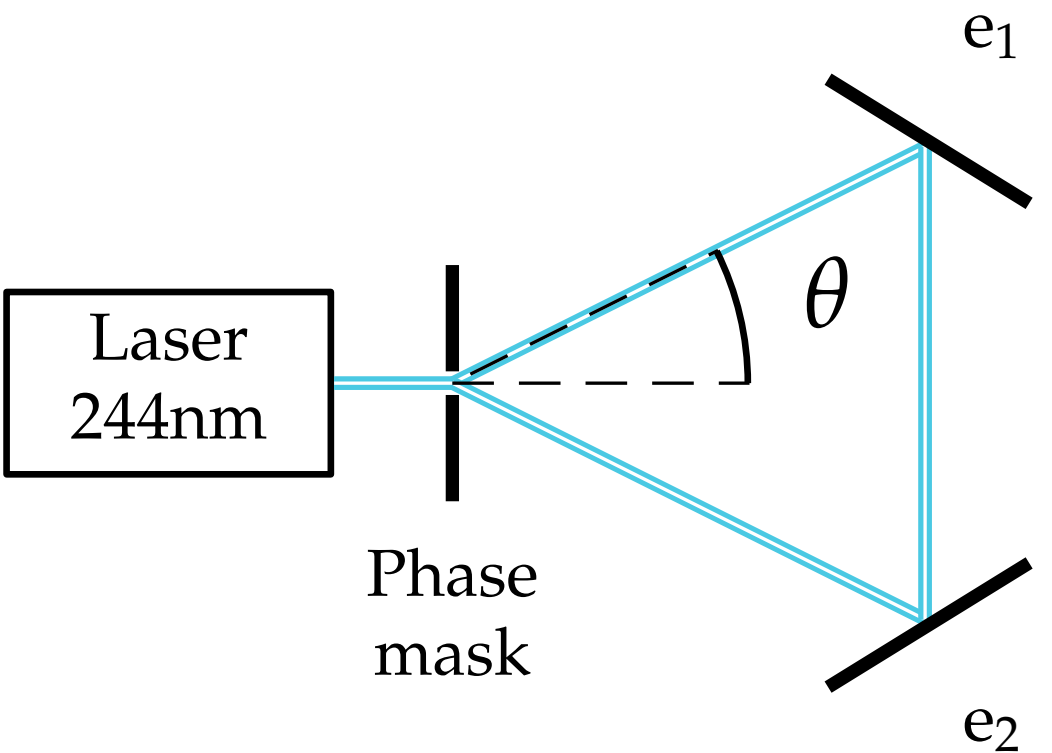
e1
θ
Laser
244nm
Phase
mask
e2

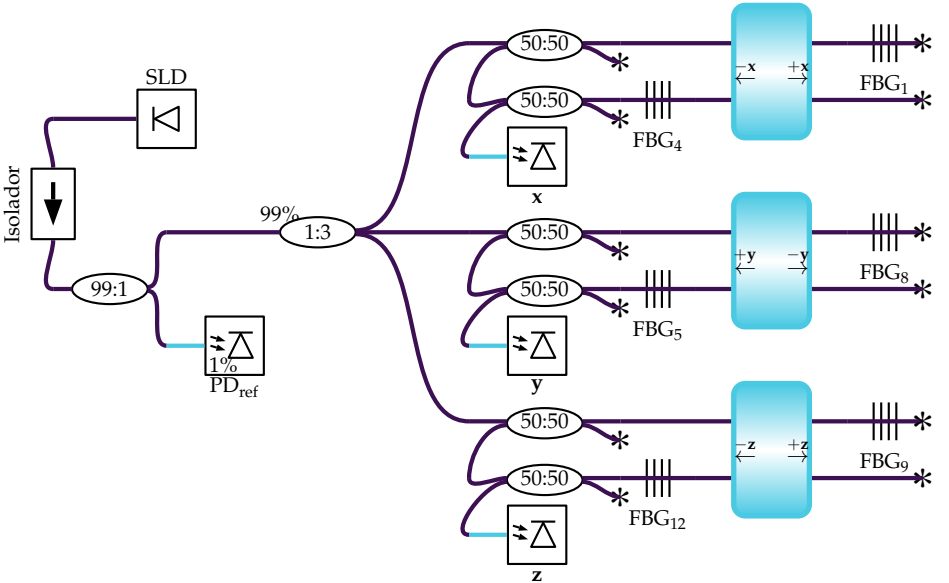
SLD
Isolador
99:1
1%
PD$_{ref}$
99%
1:3
50:50
50:50
x
FBG$_4$
$-x$
$+x$
FBG$_1$
50:50
50:50
y
FBG$_5$
$+y$
$-y$
FBG$_8$
50:50
50:50
z
FBG$_{12}$
$-z$
$+z$
FBG$_9$