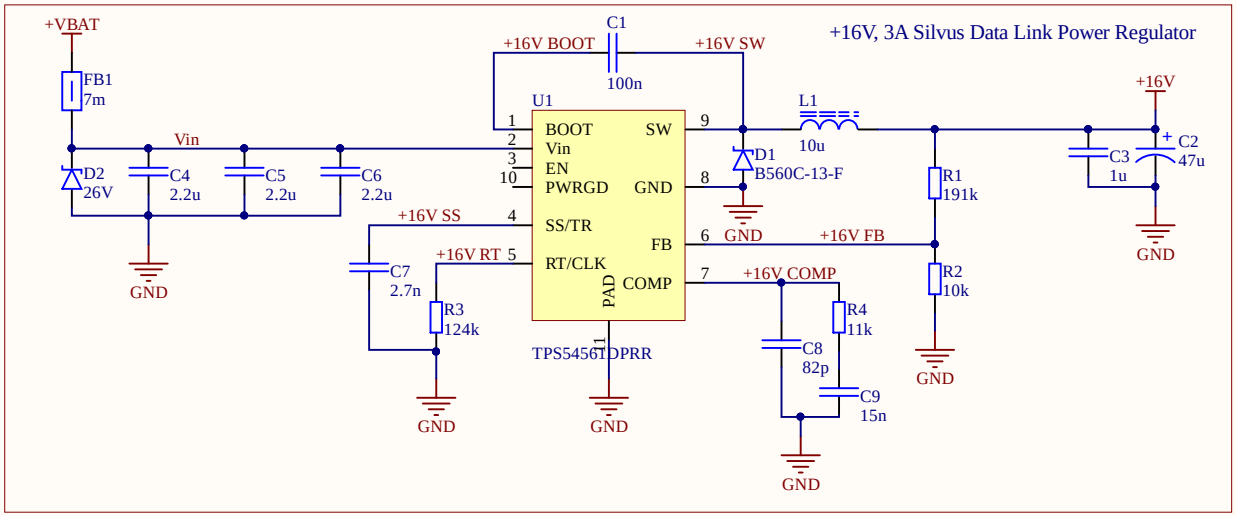

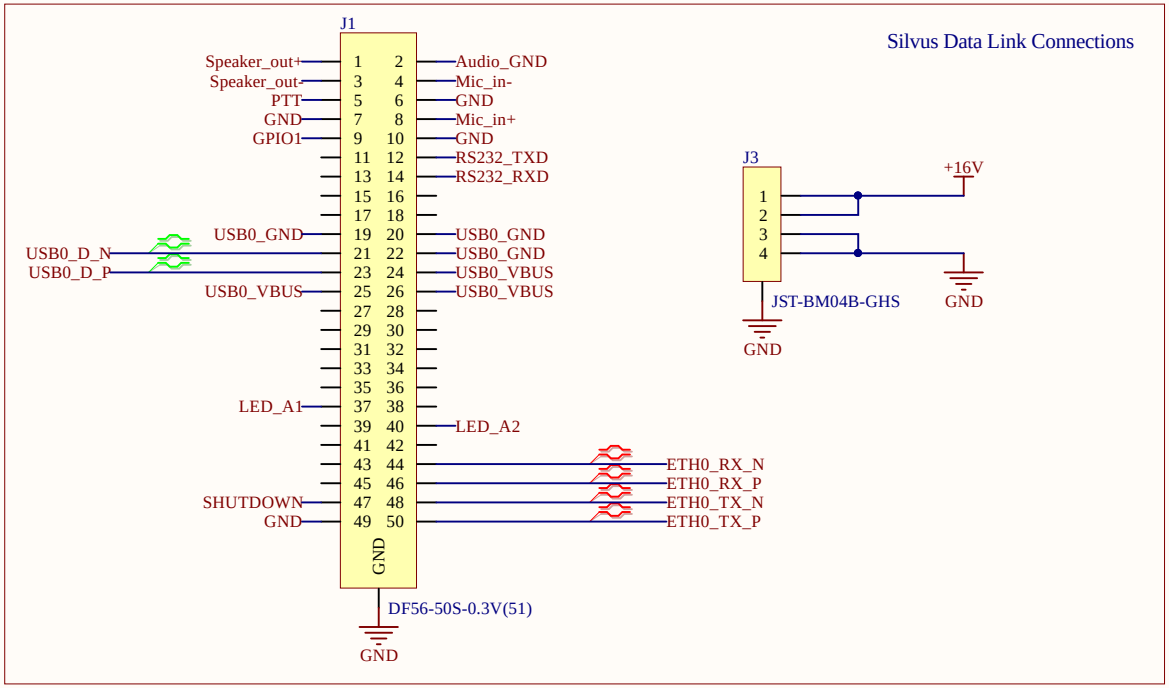

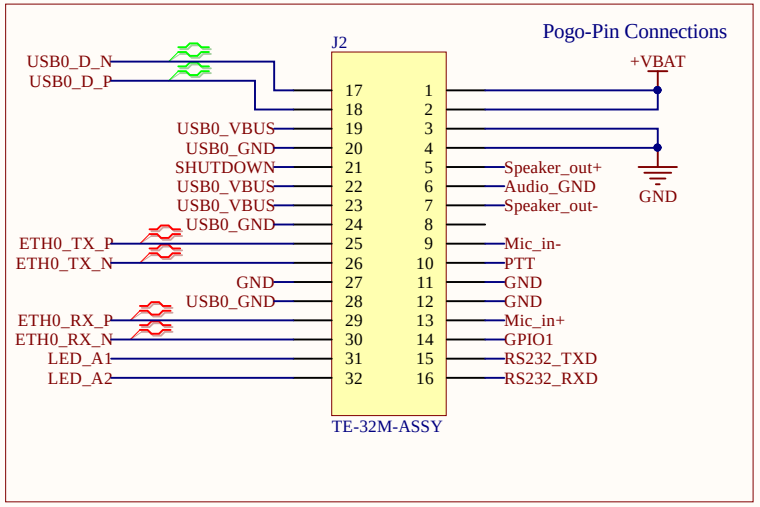

Title		
Size A4	Number	Revision
Date: 07.10.2019	Sheet of	
File: C:\Users\..\top_schematic.SchDoc	Drawn By:	