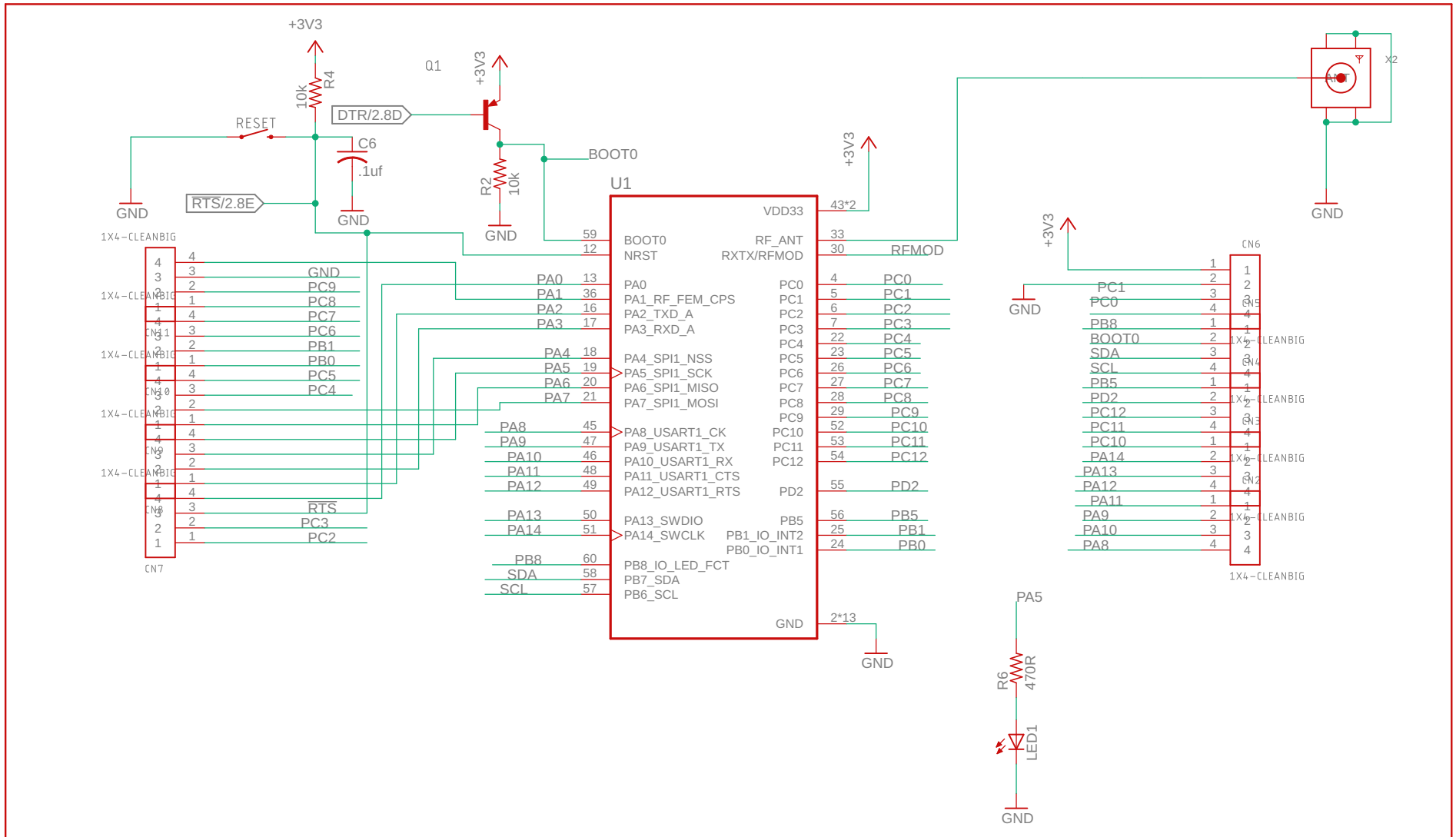

RONOTH

LoDev

TITLE: lodev-s76s

Document Number:

REV: R1

Date: 12/19/2019 8:05 PM

Sheet: 1/2