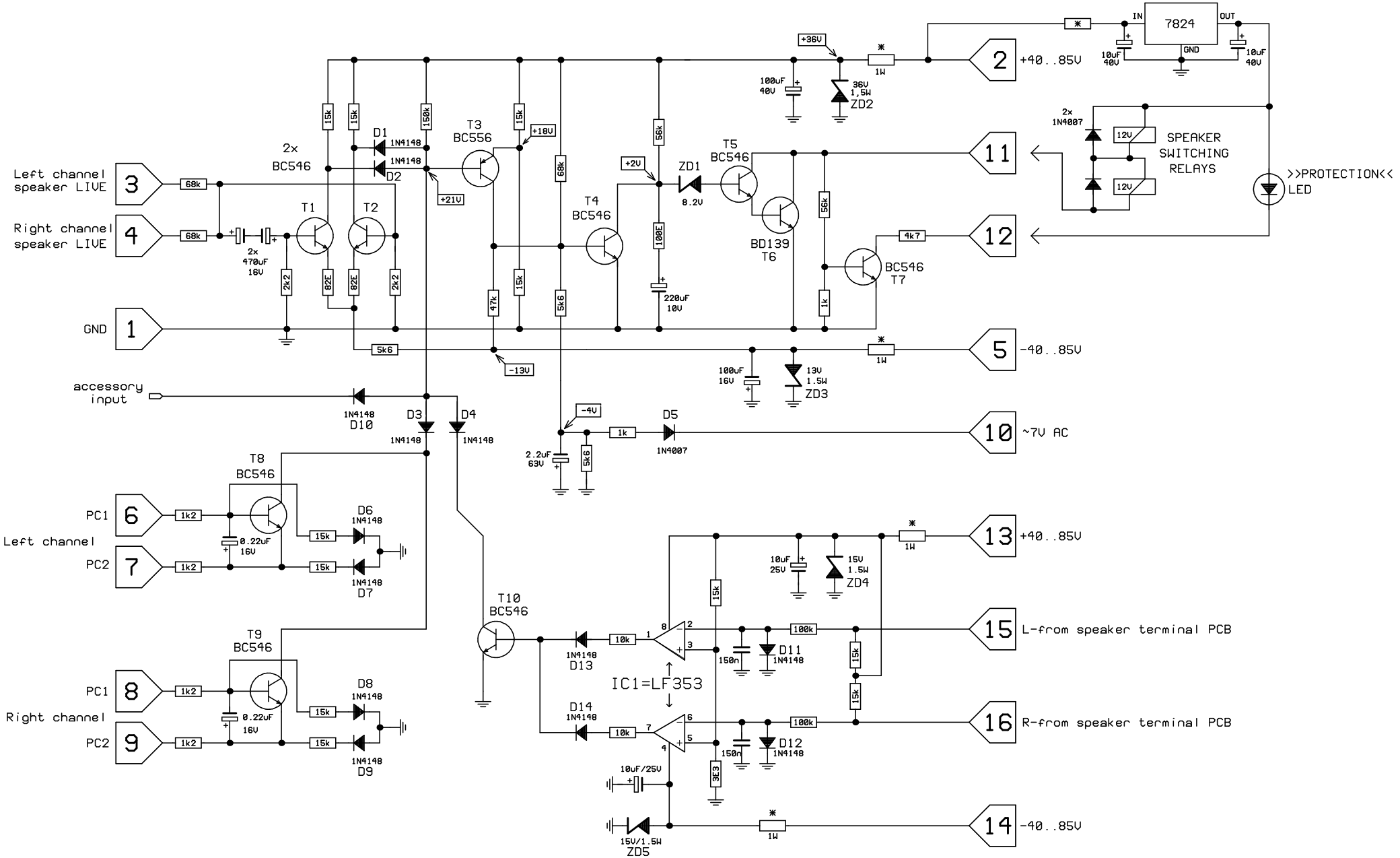

OMNI - Universal Protection

Designed by Dr.Borivoje Jagodic (1994)

Rev.3a

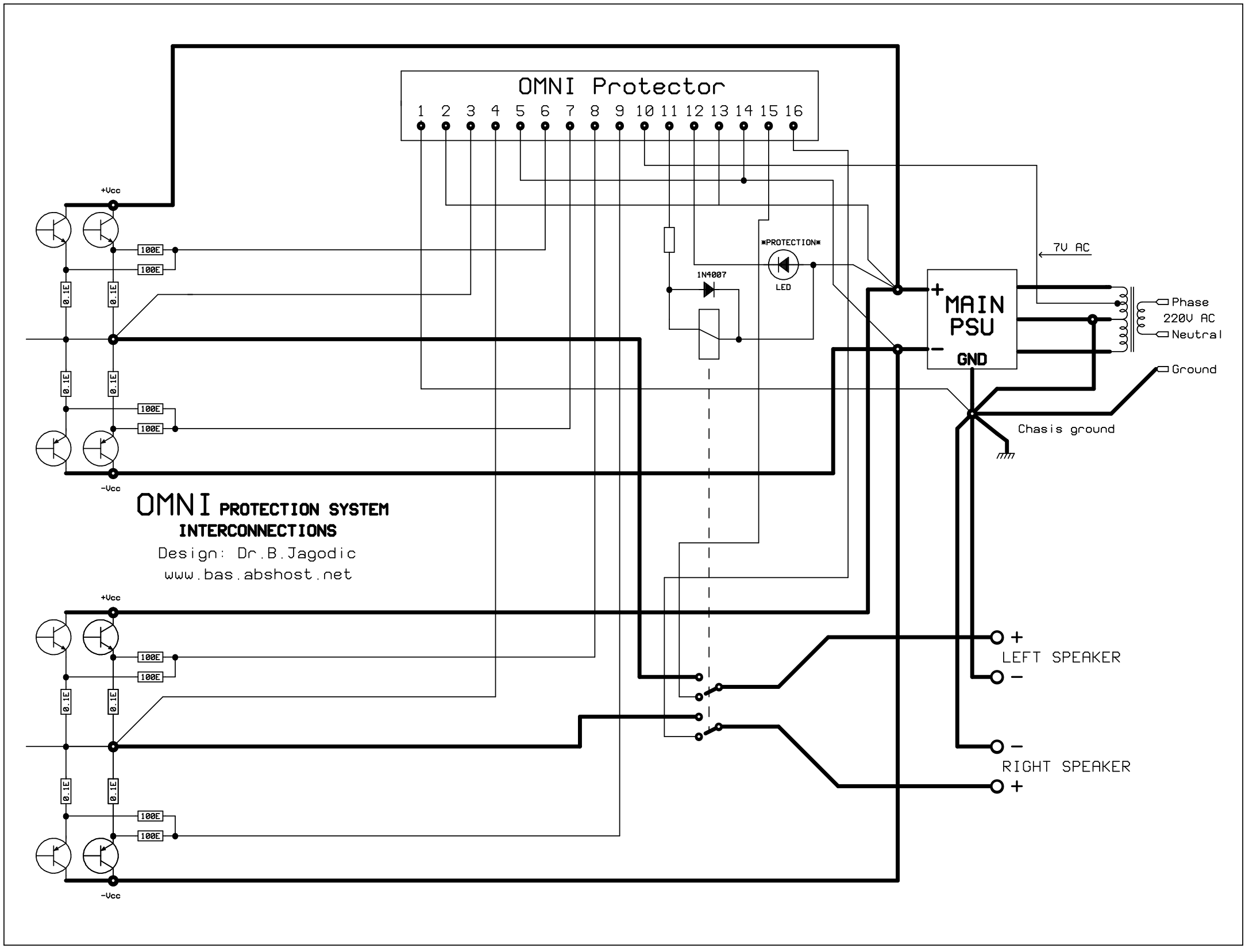
OMNI Protector
1 2 3 4 5 6 7 8 9 10 11 12 13 14 15 16
+Vcc
-Vcc
100E
0.1E
1N4007
PROTECTION
LED
MAIN PSU
GND
7V AC
Phase
220V AC
Neutral
Ground
Chasis ground
LEFT SPEAKER
RIGHT SPEAKER
OMNI PROTECTION SYSTEM
INTERCONNECTIONS
Design: Dr.B.Jagodic
www.bas.abshost.net