3. Write an Arduino/ Raspberry pi program for interfacing with PIR sensor
Experiment

Code :

```
// Define pins
int pirPin = 2;        // PIR sensor output pin
int buzzerPin = 8;     // Buzzer pin
int led = 13;          // Built-in LED pin

void setup() {
  pinMode(pirPin, INPUT);
  pinMode(buzzerPin, OUTPUT);
  pinMode(led, OUTPUT);
  Serial.begin(9600);   // Optional: for serial debugging
}

void loop() {
  int pirState = digitalRead(pirPin);

  if (pirState == HIGH) {
    digitalWrite(buzzerPin, HIGH);
    digitalWrite(led, HIGH);
    Serial.println("Motion Detected"); // Optional serial output
  } else {
    digitalWrite(buzzerPin, LOW);
    digitalWrite(led, LOW);
    Serial.println("No Motion"); // Optional serial output
  }

  delay(200); // Delay to prevent serial spamming
}
```

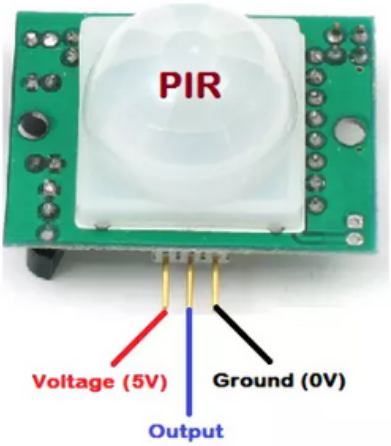

Circuit Diagram :

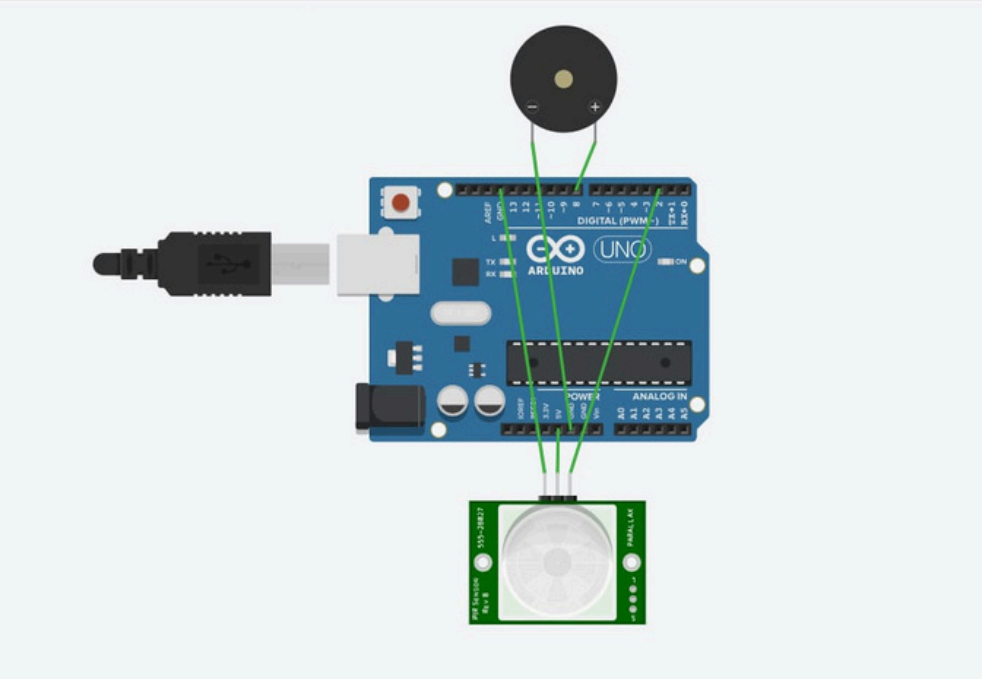
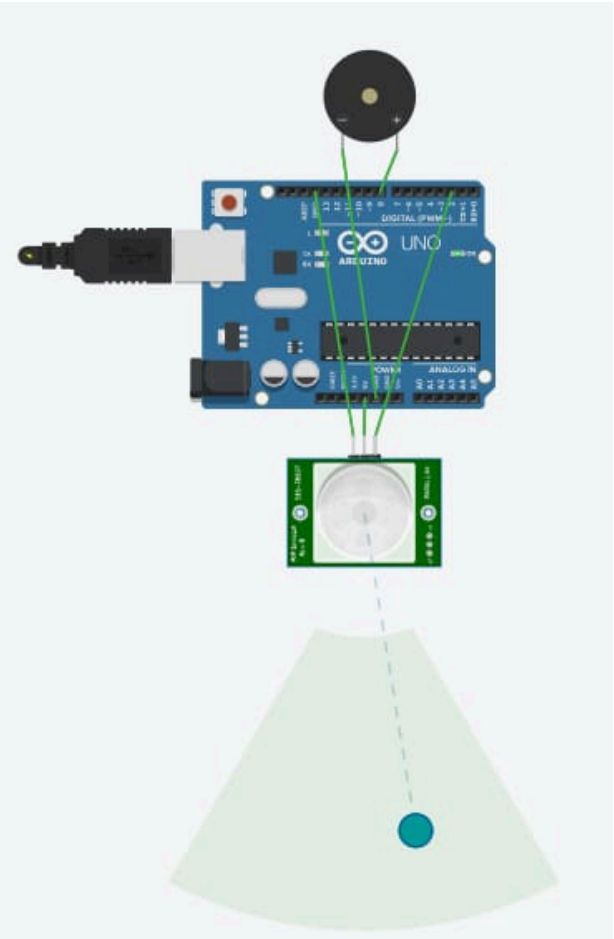
Output :