Project Proposal: Design of a Hybrid-Mode Programmable Mechanical Macropad

EE24BTECH11224 Sidharth V
EE24BTECH11225 V Sai Yashwant
EE24BTECH11221 Sarthak Mishra
EE24BTECH11217 N Sri Ram
EE24BTECH11216 Naman Singh
EE24BTECH11015 Dhawal Saini

Github Link

Contents

Problem Statement 2
Proposed Solution 2
Device Architecture 2
- Block Diagram 3
- Communication 3
  - Wired Mode 3
  - Wireless Mode 3
  - Dongle 3
- Power Management 3
  - Charging Circuit and Power Path Logic 4
  - Voltage Regulation(5V/3.7V $\rightarrow$ 3.3V) 4
  - Efficiency and Battery Life 5
- I/O Interface 5
  - Direct Mapped Key Inputs 5
  - Rotary Encoder 5
  - Display 5
- Firmware 6
  - Bootloader 6
  - HID 6
  - Profiles 6
  - Dongle 6

Schematic 6
- Macropad 7
- Dongle 8
- Power Supply 9

PCB Layout 9
Firmware Progress 10
3D Printing Progress 11
Cost Estimates 12
Component Availability 13
Approximate PCB Quotation 14

Problem Statement

The modern technical workflow on computers relies heavily on complex, multi-key shortcuts. While commerical macro-input solutions, like the macropads exist, they present three critical barriers:

- High Cost-to-Value Ratio: Entry-level wired macropad often exceed ₹3,000. Our design can be cheaper per unit if ordered in bulk.
- Reliability & Software Constraints: Most affordable options are imported with closed-source software that presents reliability issues.
- Lack of Flexibility: They offer limited firmware customizability, minimizing the flexibility of usage in changing profiles, cross-platform connections, etc.
- **Project Objective: To address workflow inefficiencies on computers by developed a power-efficient, dual mode (wireless + wired), and cost-effective Macropad.**

Proposed Solution

To bridge this gap, we propose to develop a Hybrid-Mode Custom Mechanical Macropad. This project prioritizes making low-latency and programmable macropad.

Key Features/Objectives:

- Mechanical Keys and Rotary Encoders: 9-key mechanical input array and dual rotary encoders to provide tactile, high-precision shortcuts.
- Dual-Path Connectivity: Transition between wired USB protocol and a low-latency 2.4GHz wireless link using the nRF24L01 protocol.
- Low Latency: By utilizing a Direct-Mapped GPIO Architecture instead of a scannable matrix, the devices reduces latency and achieves near true N-Key Rollover (NKRO) and eliminates the problems like ghosting (failing to detect pressed keys) and phantom keys (detecting unpressed keys).
- Programmable Firmware: A dedicated OLED display to display the the current profile, i.e, the key mapping and dedicated rotary encoder to switch profiles.
- Platform-Agnostic and Standard HID Device Functionality.
- Replaceable Hot Keys: Using hot-swappable mechanical sockets to replace physical keys whenever required.

Device Architecture

This Macropad is built around STM32F103C8T6 (Cortex-M3) microcontroller, selected for it's superior processing power compared to 8-bit alternatives and sufficient GPIO count for scanning the key matrix and the interfaces. The architecture is primarily split into two primary parts:

- The Macropad: Integrates the IO interface, the Power Management System and the Communication Module.
- The Dongle: A compact USB-interfaced unit, which receives data packets from the Macropad and translates to the standard HID commands.

Block Diagram

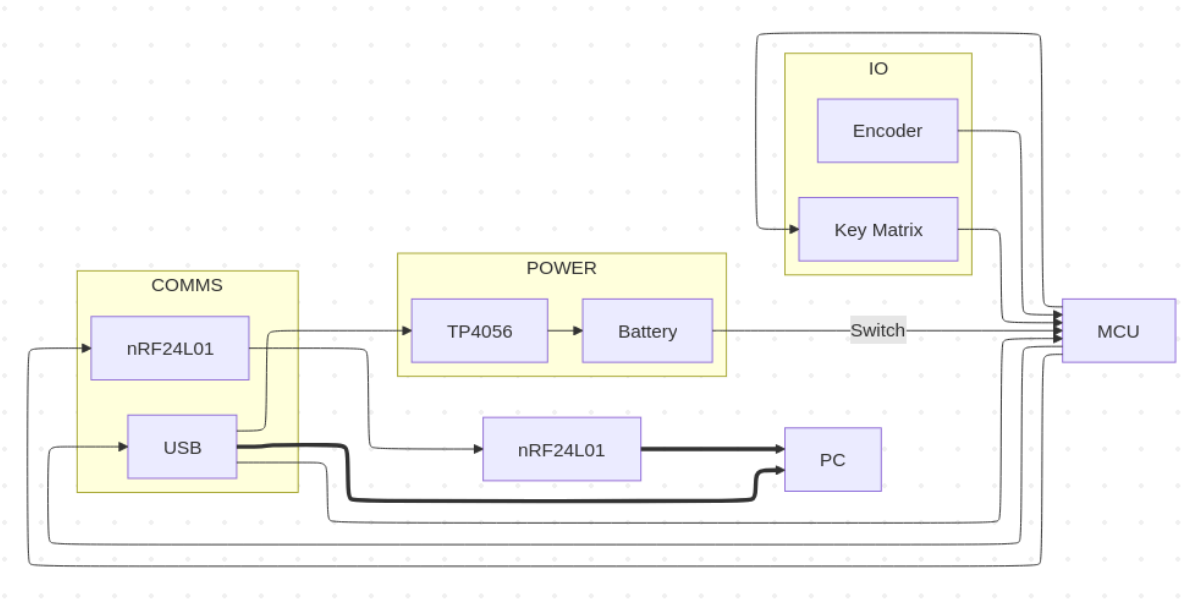

Communication

This design comes with dual-modes for communication, allowing the user to switch between the wired USB and the standard 2.4GHz wireless mode.

Wired Mode

- The microcontroller automatically works in wired mode when connected via USB, i.e, if a 5V VBUS signal is detected.
- Dataflow: **Key Matrix** $\rightarrow$ **STM32** $\rightarrow$ **USB Data Lines** $(D+ / D-)$ $\rightarrow$ **PC**
- The Macropad uses the incoming power from the port and the TP4056 power module simultaneously recharge the battery in the wired mode.
- The design follows the standard schematics for the USB 2.0 Type-C ports.

Wireless Mode

- The microcontroller automatically works in wireless mode when not connected via USB and switches to battery power.
- The nRF24L01 module is used for transmitting and receiving via the SPI (Serial Peripheral Interface) protocol.
- The design follows the following datasheet https://www.elprocus.com/nrf24l01/ , which includes the connections to the microcontroller.

Dongle

- The Dongle uses separate nRF24L01 module and microcontroller for receiving and handling the HID respectively.
- The nRF24L01 and microcontroller communicate via the SPI protocol.
- The dongle can be connected to 6 different devices simultaneously.

Power Management

The design supports seamless transitions between battery power (wired mode) and USB power (wireless mode).

Charging Circuit and Power Path Logic

- TP4056 Lithium-ion battery charger receives 5V DC from the USB Type-C port.
- The TP4056 schematic is designed on the master schematic instead of using the separate IC.
- An additional Diode protection circuitry, acting as a MUX, is used to protect the battery from the simultaneous charging and discharging activities. This ensures that the Macropad load uses the 5V USB power in wired mode and 3.7V Li-ion battery in wireless mode.
- In wireless mode, the Macropad load uses the battery power. TP4056 module manages this switching.

Voltage Regulation(5V/3.7V → 3.3V)

- This design includes both buck module and an LDO module.
- The Buck module is the primary regulator, preferred over the LDO module, because of its power efficiency and lower power dissipation.
- An LDO module is used as a safety alternative for voltage regulation.

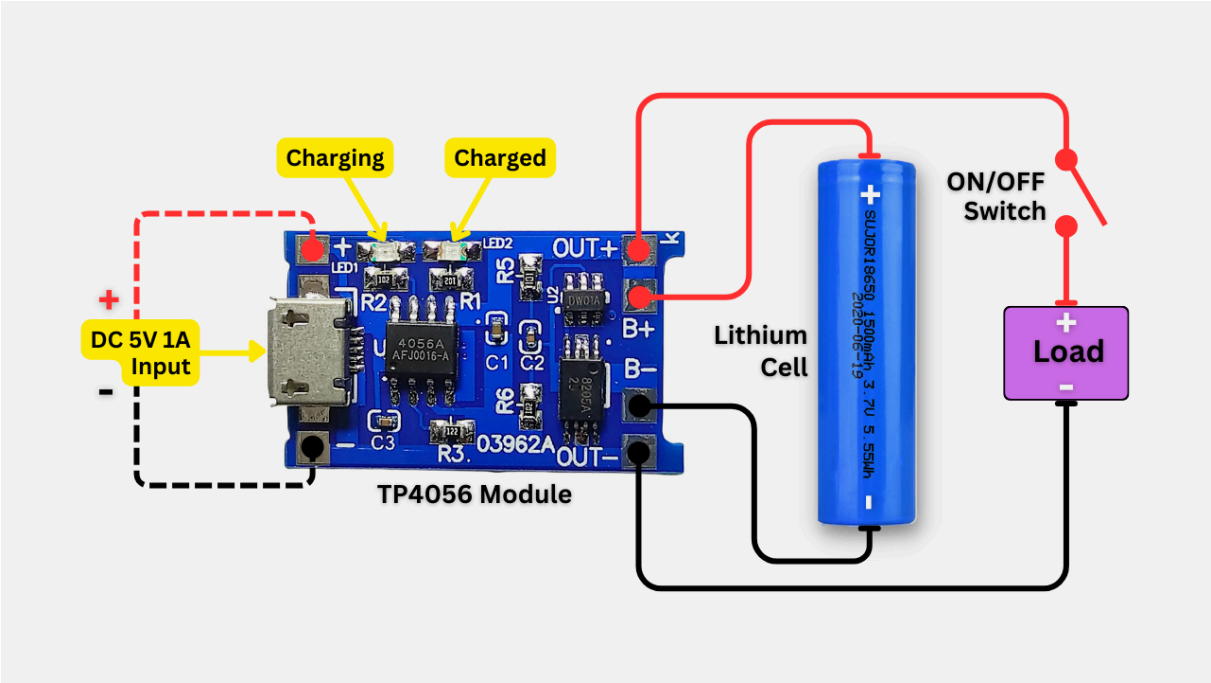

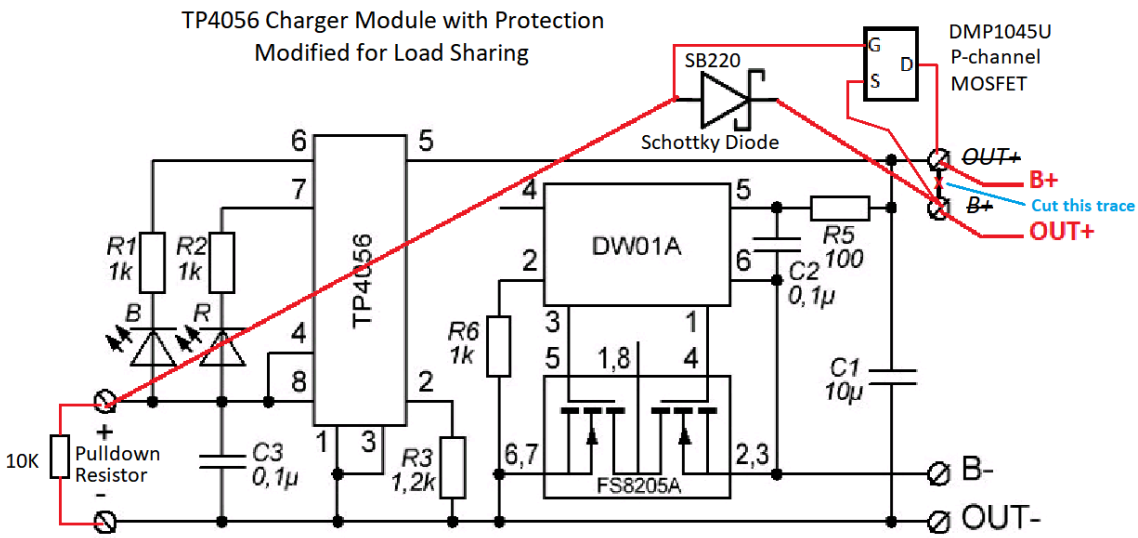

Figure 1: Reference: Arduino Forums

Efficiency and Battery Life

- Assuming worst case current draw to be 200mA and under constant use(nRF module does not sleep+Active display+MCU under load) and 2600MAh battery life. If we use 60% of the effective battery life, total uptime comes out to be 7.8 Hours.
- Under Idle situations may expect 24+ hours but requires actual hardware implementation to test.

I/O Interface

The I/O interface is the bridge between user and the microcontroller. This part comprises of Mechanical Keys, 2 Rotary Encoder, and the OLED Display.

Direct Mapped Key Inputs

- This design uses Direct-Mapped GPIO configuration for the 9 mechanical switches.
- Each key is directly connected to a dedicated GPIO pin.
- This results in near-zero latency and a true N-Key Rollover (NKRO) as every key is sensed independently unlike for key matrix, where the microcontroller scans for key presses.
- Hot-swap Keys: The keys are mounted via mechanical sockets, allowing install keys without soldering.

Rotary Encoder

- Each encoder has 5 pins: +3.3V, GND, CLK (Phase A), DT (Phase B), SW.
- Quadrature Signals (CLK & DT): These signals transmit “out-of-phase” pulses.
- Determining direction: The Clockwise rotation results in Phase A going high before Phase B and vice-versa for Counter-Clockwise rotation.
- Integrated Push Switch (SW): It is used for ?

Display

- A 0.96-inch OLED display is used to display: Active Profile: Current-Key map configuration. Connection Mode: Wired/Wireless Battery Life remaining (in %)
- The display interfaces via I2C protocol, requiring only two wires (SDA and SCL) to handle the visual data.
- The firmware inside STM32 process the input signals for the display.

Firmware

Bootloader

- A custom USB-DFU bootloader is used to to enable firmware upgrade and programmable keys through USB.

HID

- The macropad implements two HID interfaces, keyboard and system control.
- The keyboard interface is used for macros that use the keys present in a regular 106 key keyboard.
- The system control interface allows other bindings such as device volume, brightness and power controls.
- The code has been tested on Linux and Windows.
- In wireless operation, the macropad sends the usb reports to the dongle, and the dongle acts as a HID device and forwards this report to the host.

Profiles

- The Profiles and key mappings are stored outside the main firmware. The firmware reads the data from memory based on the selected profile.
- This allows changing the key mappings without having to re-flash the main HID firmware

Dongle

- The dongle acts as a USB device with multiple interfaces
- The code can be extended to support multiple device connections, using a different interface for each device connected to the nRF24L01

Schematic

This is the final schematic.

Macropad

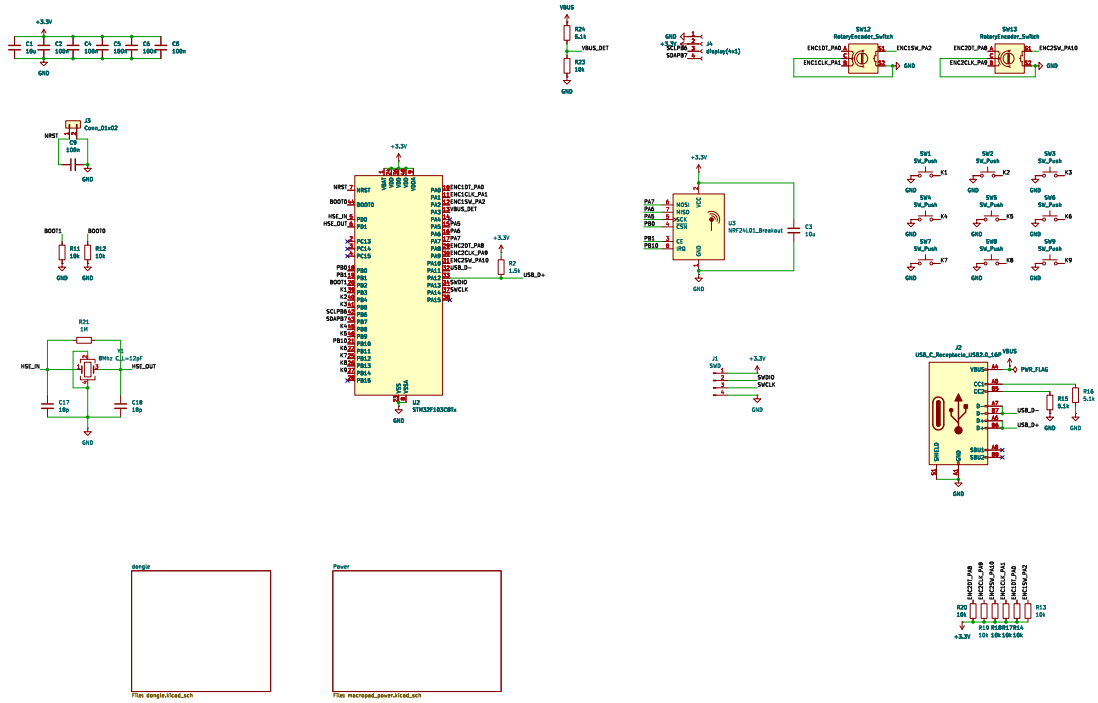

Figure 2: Macropad

- The following components are interfaced with the microcontroller
  - NRF24L01 through SPI
  - 9 Keys
  - 2 Encoders
  - Display through I2C
- Boot pins are pulled down by $10k\Omega$
- Pads are provided to use the NRST signal during debugging
- Oscillator of 8Mhz used with 18p Capacitors (As mentioned in AN2867 by STMicroelectronics)
- A Voltage divider from VBUS to detect if usb is connected(or to operate in wireless mode)
- 5.1k pulldown resistors used for normal USB-C functioning
- 9 Keys are mapped to a unique pin each. Since STM32 has internal pullup, resistors are not needed.

Dongle

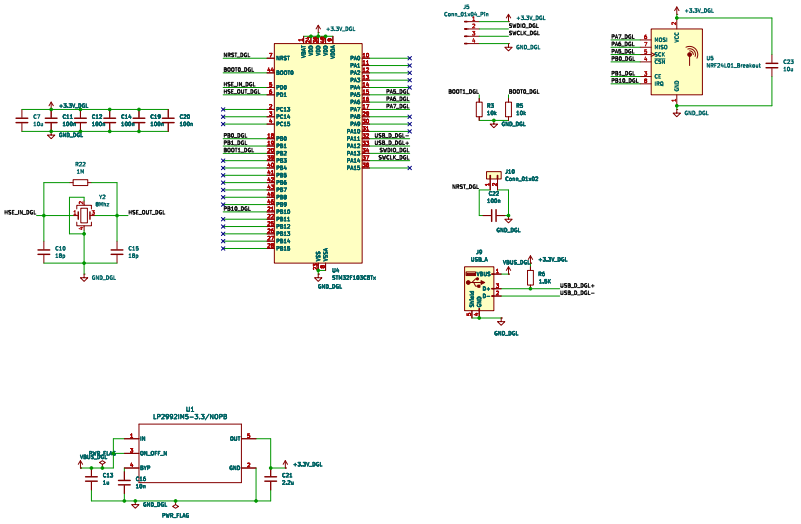

Figure 3: Dongle

- The following components are interfaced with the microcontroller
  - NRF24L01 through SPI
- Boot pins are pulled down by $10k\Omega$
- Pads are provided to use the NRST signal during debugging
- Oscillator of 8Mhz used with 18p Capacitors (As mentioned in AN2867 by STMicroelectronics)

Power Supply

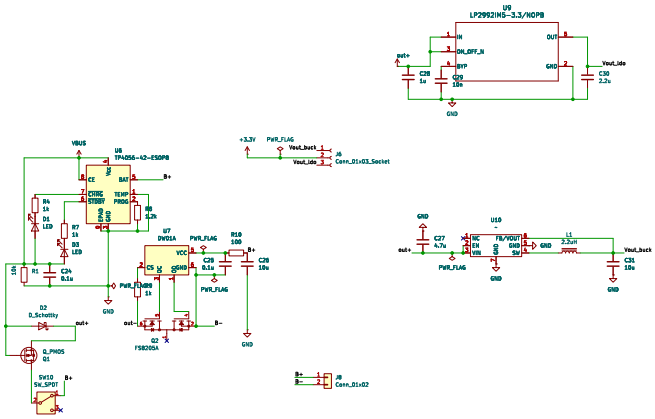

Figure 4: Power supply

- This is the power supply part of the main macropad.
- Uses the TP4056 Schematic + Power muxing circuit(Schottky + PMOS)
- Uses a Buck Converter and a Linear Voltage Regulator(Incase buck does not work properly). The final demo will have one of them soldered to fix which one to use.
- Switch to turn battery power on and off when not in use.

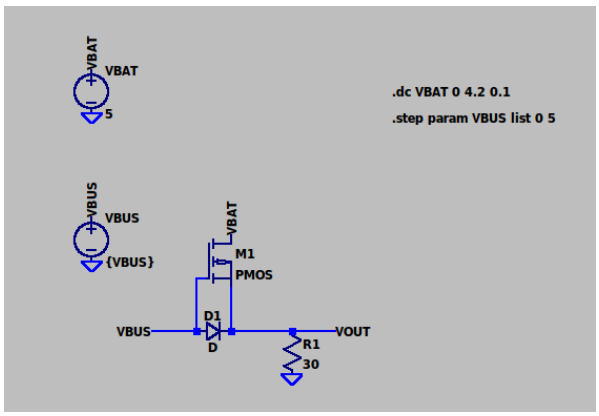

(a) Power Mux Schematic

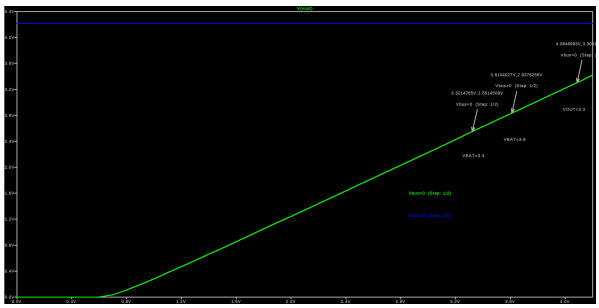

(b) Simulation Output

Figure 5: Power multiplexer design and simulation results

PCB Layout

- Placement is complete. Routing is left.
- Aiming for single sided SMD components for cheaper assembly costs.

- Battery Placement will be externally under the macropad.
- Dongle needs rerouting
- Keys pitch and positioning is appropriate.

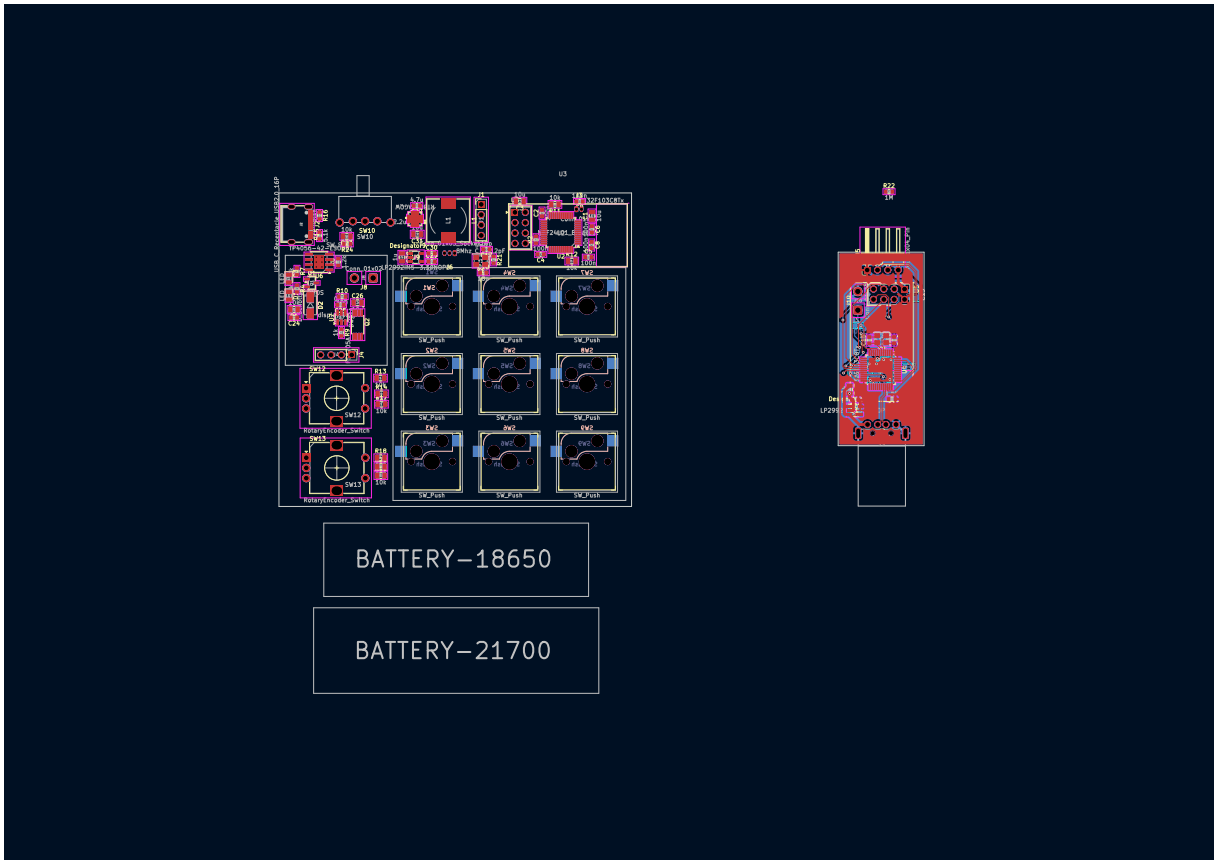

Figure 6: PCB Layout

Firmware Progress

- DFU + USB HID Testing. The macropad can be programmed dynamically without rewriting the firmware everytime.
- Display tested.
- nRF module and encoder needs testing.

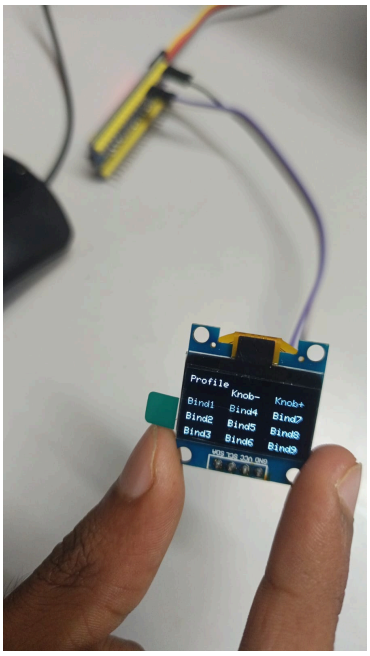

3D Printing Progress

We did a test 3d print of a key. We will test it later. The model was taken from online (Link).

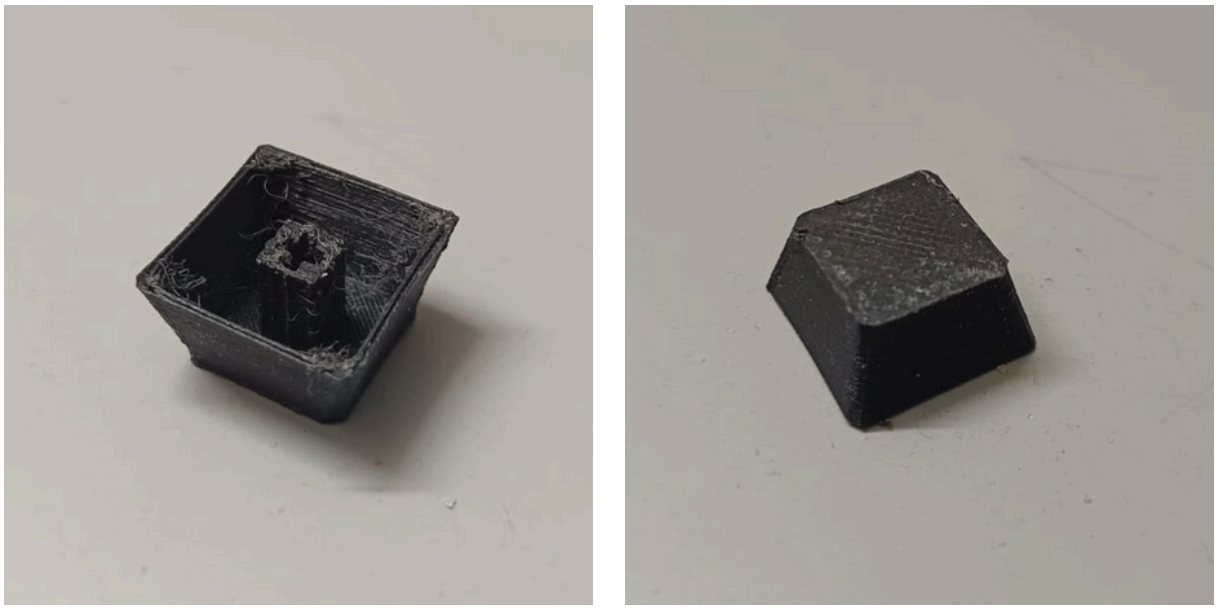

,

Figure 8: 3D printed keycap

Cost Estimates

Sl No	Component Name	Unit Cost (₹)	Qty	Subtotal (₹)
1	STM32F103C8T6	176.00	2	352.00
2	M177 NRF24L01 Module	71.00	2	142.00
3	Mechanical Keys (Pack of 10)	300.00	1	300.00
4	Kailh Hot-swap Socket (Pack of 10)	80.00	1	80.00
5	TP4056 Module	15.00	1	15.00
6	Battery Protection (DW01A)	4.00	1	4.00
7	FS8205A Dual MOSFET	8.00	1	8.00
8	TP4056 IC	7.00	1	7.00
9	0.96 inch OLED Module	200.00	1	200.00
10	Lithium Ion Battery	0.00	1	0.00
11	Rotary Encoder Module	50.00	2	100.00
12	Voltage Regulator (LP2992)	14.00	2	28.00
13	Crystal Oscillator (8MHz)	10.00	2	20.00
14	Buck Converter (RT8010)	45.48	1	45.48
15	USB A Connector	2.64	1	2.64
16	USB-C Receptacle	3.95	1	3.95
17	Schottky Diode (SS34)	2.00	2	4.00
18	PMOS (SI2305CDS)	10.00	1	10.00
19	Slide Switch (SPDT)	7.00	2	14.00
20	Pin Headers (1xN)	2.00	14	28.00
21	Inductor 2.2uH	15.00	1	15.00
22	Cap 4.7uF	7.00	1	7.00
23	Cap 10uF	6.00	9	54.00
24	Res 10K Ohm	0.35	5	1.75
25	Res 1K Ohm	0.19	3	0.57
26	Cap 0.1uF	1.69	14	23.66
27	Res 1.2K Ohm	0.15	1	0.15
28	Res 100 Ohm	0.40	3	1.20
29	Res 1.5k	1.00	2	2.00
30	Res 5.1k	1.00	2	2.00
31	Cap 18pF	1.36	4	5.44
32	Cap 1uF	1.17	2	2.34
33	LEDs (0805)	1.55	4	6.20

34	Cap 10nF	0.63	1	0.63
35	Cap 2.2uF	1.00	1	1.00
			Grand Total	**₹1,586.04**

Note: Lithium ion battery (Sl No 10) is a lab-sourced item and is not included in the total cost.

Component Availability

Here is the list of components which can readily be procured from Robu.

Sl	Component Name	Part Number	Package	Vendor Link
1	STM32F103C8T6	STM32F103C8T6	LQFP-48	Robu.in
2	nRF24L01 Module	NRF24L01	PCB 4x2	Robu.in
3	Mechanical Keys	Gateron Pro	5-Pin TH	Meckeys
4	Kailh Hotswap Socket	CPG151101S11-16	SMD	Meckeys
5	TP4056 Module	TP4056	PCB Module	Robu.in
6	Battery Protection	DW01A	SOT-23-6	Robu.in
7	FS8205A MOSFET	FS8205A	SMD	Robu.in
8	TP4056 IC	TP4056	SMD	Evelta
9	0.96″ OLED Module	SSD1306	PCB 4-pin	Robu.in
10	Li-ion Battery	Lab ID: AA546	Cell	Lab Item
11	Rotary Encoder	KY-040	5 Pin Header	Robu.in
12	Voltage Regulator	LP2992-3.3V	SOT-23-5	Robu.in
13	Crystal Oscillator	8MHz	SMD 3225	Robu.in
14	Buck Regulator	RT8010-33GQW	6-WDFN	DigiKey
15	USB A Connector	U-G-O4DD	Type A Male	Robu.in
16	USB-C Receptacle	U263-163N	SMD 16P	Robu.in
17	Schottky Diode	SS34	DO-214	Robu.in
18	P-MOSFET	SI2305CDS	SOT-23	Robu.in
19	Slide Switch	SS12F23L5	Plugin	Robu.in
20	Pin Headers	2.54mm Machined	Through Hole	Robu.in
21	Inductor 2.2uH	CDRH104R	SMD	Robu.in
22	Cap 4.7uF	GRM188Z71C475	0603	Robu.in
23	Cap 10uF	GRT21BR61C106	0805	Robu.in
24	Res 10K Ohm	RC0805FR-0710K	0805	Robu.in
25	Res 1K Ohm	AC0603FR-071K	0603	Robu.in
26	Cap 0.1uF	AC0603JRX7R9BB	0603	Robu.in
27	Res 1.2K Ohm	AC0603FR-071K2	0603	Robu.in
28	Res 100 Ohm	AC0201FR-07100R	0603	Robu.in
29	Res 1.5K Ohm	RT0603FRE071K5	0603	Robu.in
30	Res 5.1K Ohm	RT0603FRE075K1	0603	Robu.in
31	Cap 18pF	GCM0335C1H180	0603	Robu.in
32	Cap 1uF	UMK212B7105K	0805	Robu.in
33	LEDs (Red)	17-21SURC/S530	0805	Robu.in
34	Cap 10nF	Ceramic MLCC	0603	Robu.in
35	Cap 2.2uF	TMK107BBJ225	0603	Robu.in

Item	Count
Keycaps	9
Macropad Casing	1
Dongle Casing	1

Table 1: 3D Printing Estimates

Some expenses in procuring modules for testing before PCB fabrication are not included.

Approximate PCB Quotation

This is based on assembly configuration and very rough PCB Area.

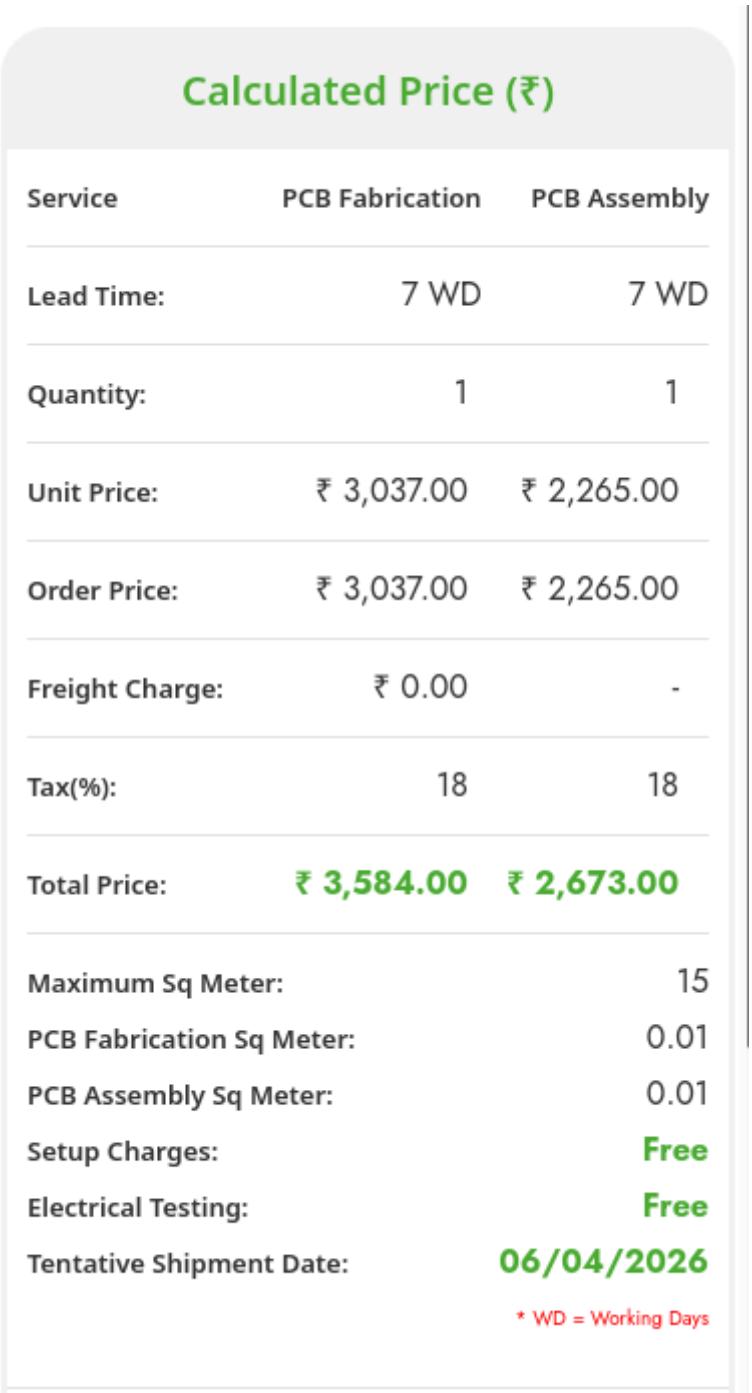

Calculated Price (₹)

Service	PCB Fabrication	PCB Assembly
Lead Time:	7 WD	7 WD
Quantity:	1	1
Unit Price:	₹ 3,037.00	₹ 2,265.00
Order Price:	₹ 3,037.00	₹ 2,265.00
Freight Charge:	₹ 0.00	-
Tax(%):	18	18
Total Price:	₹ 3,584.00	₹ 2,673.00

Maximum Sq Meter:	15
PCB Fabrication Sq Meter:	0.01
PCB Assembly Sq Meter:	0.01
Setup Charges:	Free
Electrical Testing:	Free
Tentative Shipment Date:	06/04/2026

* WD = Working Days

Figure 9: Approximate PCBPower Quotation