MITSUBISHI ELECTRIC

INVERTER
A800/F800/E800

PLC FUNCTION PROGRAMMING MANUAL

Chapter 1 PLC FUNCTION 8

1.1 Applicable inverter model 8

1.1.1 SERIAL number check 8

1.2 Related manuals 9

1.3 Function block diagram 9

1.4 Operation panel indication 10

1.5 PLC function specifications 11

1.6 System configuration 13

1.7 Operations of PLC function (Pr.414, Pr.415, Pr.498, Pr.1150 to Pr.1199) 15

1.8 Prior to creating sequence programs 16

1.8.1 Precautions for creating sequence programs 16
1.8.2 The main functions of FR Configurator2 (Developer) 16
1.8.3 Sequence program execution 17
1.8.4 Setting the communication parameter 20
1.8.5 Writing sequences programs 21

1.9 Device map 22

1.9.1 I/O device map 22
1.9.2 Ethernet I/O device map (master) 27
1.9.3 Ethernet I/O device map (slave) 27
1.9.4 Internal relay (M) device map 27
1.9.5 Data register (D) device map 27
1.9.6 Special relay 28
1.9.7 Special register 31
1.9.8 Special register (master) 43
1.9.9 Special register (slave) 43

1.10 Special registers to monitor and control inverter status 44

1.10.1 Always readable data 44
1.10.2 Data read by controlling read command (from OFF to ON) 46
1.10.3 Data writing method by controlling write command (from OFF to ON) 50
1.10.4 Inverter operating status control 55
1.10.5 Inverter parameter access error (SD1150) 57
1.10.6 Inverter status (SD1151) 57
1.10.7 User-defined error (SD1214) 57
1.10.8 Monitor setting selection (SD1215 to SD1218) 58
1.10.9 Inverter-to-inverter link function 59

1.11 Read/Write method of inverter parameters 61

1.11.1 Reading inverter parameters 61
1.11.2 Writing inverter parameters 62

1.12 User area reading/writing 64

1.13 Analog I/O function 66

1.13.1 Analog input 66
1.13.2 Analog output 66

1.14 Pulse train input function 67

1.15 PID control 68

1.16 Clearing the flash memory of the PLC function 71

1.17 Constant scan 72

Chapter 2 CC-LINK COMMUNICATION 74

2.1 System configuration 74

2.1.1 System configuration example 74

2.2 CC-Link parameter 76

2.2.1 CC-Link extended setting (Pr.544) 76

2.3 CC-Link I/O specifications 77

2.3.1 I/O signals when one station in the CC-Link Ver.1 is occupied (Pr.544 = "100") 77
2.3.2 I/O signals when the double setting is set in CC-Link Ver.2 (Pr.544 = "112") 80
2.3.3 I/O signals when the quadruple setting is set in CC-Link Ver.2 (Pr. 544 = "114") 83
2.3.4 I/O signals when the octuple setting is set in CC-Link Ver.2 (Pr. 544 = "118 or 128") 84
2.3.5 I/O signals for the CC-Link IE TSN communication (Pr.544 = "138") 86

2.4 Buffer memory 88

2.4.1 Remote output signals (master station to inverter) 88
2.4.2 Remote input signals Pr.544 = "100" (inverter to master station) 89
2.4.3 Remote registers Pr.544 = "100" (master station to inverter) 90
2.4.4 Remote registers Pr.544 = "100" (inverter to master station) 91

Chapter 3 SEQUENCE PROGRAM 94

3.1 Overview 94

3.1.1 Overview of operation 94

3.2 RUN/STOP operation 96

3.3 Program configuration 96

3.4 Programming language 97

3.4.1 Relay symbolic language (ladder mode) 97
3.4.2 Function block (FB) 98

3.5 Operation processing method of the PLC function 99

3.6 I/O processing method. 100

3.6.1 Refresh method. 100
3.6.2 Response delay in refresh mode 101

3.7 Scan time. 102

3.8 Values that can be used in sequence programs 103

3.8.1 BIN (binary). 103
3.8.2 HEX (hexadecimal) 104

3.9 Explanation of devices. 105

3.9.1 Device list 105
3.9.2 I/O X and Y 106
3.9.3 Internal relay M 107
3.9.4 Timer T 108
3.9.5 Retentive timer ST 109
3.9.6 Processing and accuracy of timers 109

3.10 Counter C 112

3.10.1 Count process in refresh mode. 113
3.10.2 Maximum counting speed of counter 113

3.11 Data register D. 114

3.12 Special relays and special registers 115

3.13 Function list 116

3.14 RUN/STOP method of PLC function from an external source (remote RUN/STOP). 117

3.15 Watchdog timer (watchdog error supervision timer) 119

3.16 Self-diagnostic function 120

3.16.1 Operation mode when there is an operation error 120

3.17 Registering file password. 121

3.18 Output (Y) status settings when STOP status → RUN status 123

3.19 Structure of instructions. 124

3.20 Bit device processing method 126

3.20.1 1-bit processing. 126
3.20.2 Digit specification processing 126

3.21 Handling of numerical values 129

3.22 Operation error 130

3.23 Sequence instructions list. 131

3.23.1 How to view the instruction list table 131
3.23.2 Sequence instructions list 132
3.23.3 Basic instructions 134
3.23.4 Application instructions 137
3.23.5 Display instruction 139
3.23.6 Control syntaxes 139

3.24 How to view instructions 140

3.25 Sequence instructions 141

3.25.1 Contact instruction: operation start, series connection, parallel connection ... LD, LDI, AND, ANI, OR, ORI 141
3.25.2 Association instruction: ladder block series connection, parallel connection ... ANB, ORB 143
3.25.3 Association instruction: operation results, push, read, pop ... MPS, MRD, MPP 145
3.25.4 Output instruction: bit device, timer, counter ... OUT 148
3.25.5 Output instruction: device set, reset ... SET, RST. 150
3.25.6 Output instruction: rising, falling differential output ... PLS, PLF 152
3.25.7 Shift instruction: bit device shift ... SFT, SFTP 154
3.25.8 Master control instruction: master control set, reset ... MC, MCR. 156
3.25.9 Termination instruction: termination of main program ... FEND 159
3.25.10 Termination instruction: sequence program termination ... END 159
3.25.11 Other instructions: non-processing ... NOP, NOPLF, PAGE n 160

3.26 Basic instruction (16-bit). 163

3.26.1 Comparison operation instruction 163
3.26.2 Comparison operation instruction: 16-bit data comparison ... =, <>, >, <=, <, >= 164
3.26.3 Arithmetic operation instruction. 166
3.26.4 Arithmetic operation instruction: BIN 16-bit addition/subtraction ... +, +P, -, -P 167
3.26.5 Arithmetic operation instruction: BIN 16-bit multiplication/division ... *, *P, /, /P 170
3.26.6 Arithmetic operation instruction: BIN 16-bit data increment/decrement ... INC, INCP, DEC, DECP. 173
3.26.7 Data transfer instruction 174
3.26.8 Data transfer instruction: 16-bit data transfer ... MOV, MOVP 174
3.26.9 Data conversion instruction: 2’s complements of BIN 16-bit data ... NEG, NEGP 175
3.26.10 Data conversion instructions: BIN 16-bit data BCD conversions ... BCD, BCDP 177
3.26.11 Data conversion instructions: BIN 16-bit data BIN conversions ... BIN, BINP 178

3.27 Basic instruction (32-bit). 179

3.27.1 Comparison operation instruction 179
3.27.2 Comparison operation instruction: 32-bit data comparison ... D=, D<>, D>, D<=, D<, D>= 180
3.27.3 Arithmetic operation instruction. 182
3.27.4 Arithmetic operation instruction: BIN 32-bit addition/subtraction ... D+, D+P, D-, D-P 182
3.27.5 Arithmetic operation instruction: BIN 32-bit multiplication/division ... D*, D*P, D/, D/P 185
3.27.6 Arithmetic operation instruction: BIN 32-bit data increment/decrement ... DINC, DINCP, DDEC, DDECP 188
3.27.7 Data transfer instruction 189
3.27.8 Data transfer instruction: 32-bit data transfer ... DMOV, DMOVP. 189
3.27.9 Data conversion instruction: 2's complements of BIN 32-bit data ... DNEG, DNEGP. 191
3.27.10 Data conversion instructions: BIN 32-bit data BCD conversions ... DBCD, DBCDP 192
3.27.11 Data conversion instructions: BIN 32-bit data BIN conversions ... DBIN, DBINP 193
3.27.12 Program branch instruction:CJ, SCJ, JMP, GOEND 194

3.28 Application instructions (16-bit) 196

3.28.1 Logical operation instructions 196
3.28.2 Logical operation instruction: BIN 16-bit logical AND ... WAND, WANDP 197
3.28.3 Logical operation instruction: BIN 16-bit logical OR ... WOR, WORP. 200
3.28.4 Logical operation instruction: BIN 16-bit data exclusive OR ... WXOR, WXORP 202
3.28.5 Logical operation instruction: BIN 16-bit data exclusive NOR ... WXNR, WXNRP 204

3.29 Application instructions (32-bit) 206

3.29.1 Logical operation instructions 206
3.29.2 Logical operation instruction: BIN 32-bit logical AND ... DAND, DANDP 207
3.29.3 Logical operation instruction: BIN 32-bit logical OR ... DOR, DORP 210
3.29.4 Logical operation instruction: BIN 32-bit data exclusive OR ... DXOR, DXORP 213
3.29.5 Logical operation instruction: BIN 32-bit data exclusive NOR ... DXNR, DXNRP 215

3.30 Display instruction 217

3.30.1 Character string data transfer ... $MOV, $MOVP 217
3.30.2 Character string output ... G. PRR, GP.PRR, UMSG 218

Chapter 4 ERROR CODE LIST 224

4.1 How to read error codes 224

Chapter 5 APPENDIX 228

5.1 Instruction processing time 228

5.2 How to check specification changes 231

5.2.1 Details of specification changes 231
REVISIONS 232

CONTENTS

MEMO

CHAPTER 1 PLC FUNCTION

1.1 Applicable inverter model 8
1.2 Related manuals 9
1.3 Function block diagram 9
1.4 Operation panel indication 10
1.5 PLC function specifications 11
1.6 System configuration 13
1.7 Operations of PLC function (Pr.414, Pr.415, Pr.498, Pr.1150 to Pr.1199) 15
1.8 Prior to creating sequence programs 16
1.9 Device map 22
1.10 Special registers to monitor and control inverter status 44
1.11 Read/Write method of inverter parameters 61
1.12 User area reading/writing 64
1.13 Analog I/O function 66
1.14 Pulse train input function 67
1.15 PID control 68
1.16 Clearing the flash memory of the PLC function 71
1.17 Constant scan 72

1 PLC FUNCTION

This instruction manual explains the functions and devices required for programming.

Trademarks

- Ethernet is a registered trademark of Fuji Xerox Corporation in Japan.
- Other company and product names herein are either trademarks or registered trademarks of their respective owners.

1.1 Applicable inverter model

This manual explains the PLC function of the FR-A800 series, FR-A800 Plus series, FR-F800 series, and FR-E800 series. FR-A800-P and FR-A800 Plus series inverters are described as FR-A800 series inverters unless otherwise specified.

1.1.1 SERIAL number check

Availability of the following functions depends on the manufacture year and month of the inverter. Check the manufacture year and month by the SERIAL number indicated on the rating plate of the inverter.

Rating plate

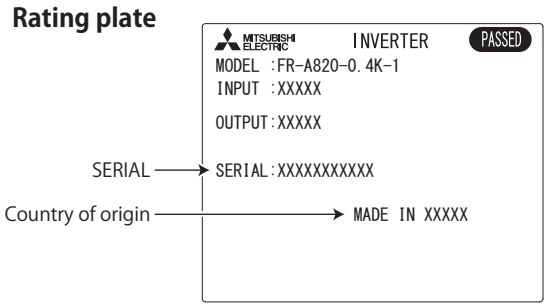

Rating plate example

- **FR-A800/FR-A800 Plus/FR-F800 series**

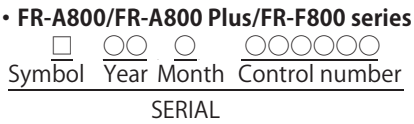

- **FR-E800 series**

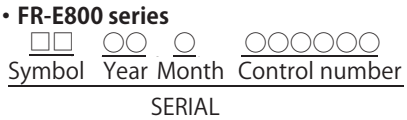

The SERIAL consists of one symbol (two symbols for the FR-E800 series), three characters indicating the production year and month, and six characters indicating the control number.
The last two digits of the production year are indicated as the Year, and the Month is indicated by 1 to 9, X (October), Y (November), or Z (December).

Function	Series				Manufacture year and month
	FR-A800 (except for the FR-A800-P) FR-A800 Plus (FRA800-CRN/LC)	FR-A800 Plus (other than FR-A800-CRN/LC)	FR-F800	FR-E800	
Programming language (structured text (ST))	-	-	-	○	January 2021 or later
32-point devices: Timer (T), retentive timer (ST), and counter (C)	○		○	-	
256-point device: Pointer (P)	-		-	○	

○: Supported, -: Not supported

1.2 Related manuals

The manuals related to the PLC function are shown below. The download of the latest manuals is free at the Mitsubishi Electric FA Global Website.

Manual name	Manual number
FR-A800 Instruction Manual (Detailed)	IB-0600503ENG
FR-A860 Instruction Manual (Detailed)	IB-0600563ENG
FR-F800 Instruction Manual (Detailed)	IB-0600547ENG
FR-F860 Instruction Manual (Detailed)	IB-0600688ENG
FR-E800 Instruction Manual (Function)	IB-0600868ENG
FR-E800 Instruction Manual (Communication)	IB-0600871ENG
Ethernet Function Manual	IB-0600628ENG
Roll to Roll Function Manual	IB-0600622ENG
FR Configurator2 Instruction Manual	IB-0600516ENG
GX Works2 Version 1 Operating Manual (Common)	SH-080779ENG

1.3 Function block diagram

The following function blocks explain I/O information flow to and from the inverter in the PLC function.

- I/O information can be read or written by accessing the inverter with special relays, special registers, etc. using predetermined methods.
- It is possible to operate the inverter and read and write parameters using input information from control input terminals according to created sequence programs (saved in the inverter). Output signals are also be output from control output terminals, not only as status signals of the inverter but as signals to turn the pilot lamp ON and OFF, interlock signals, and other control signals set by users as desired.

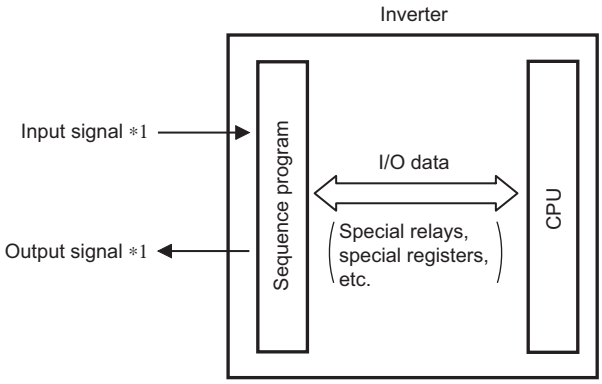

*1 Set "9999" in any of **Pr.178 to Pr.189 (input terminal function assignment)** and Pr.**190 to Pr.196 (output terminal function selection)** to use terminals as general-purpose I/O terminals. For details on **Pr.178 to Pr.189** and **Pr.190 to Pr.196**, refer to the Instruction Manual of the inverter.

1.4 Operation panel indication

When a sequence program is running, the following indicators are displayed on the operation panel and parameter unit.

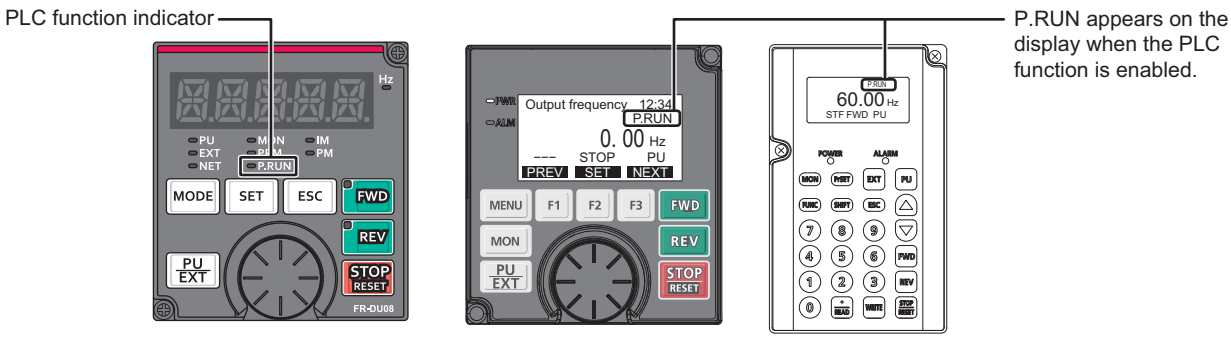

FR-DU08 FR-LU08 FR-PU07

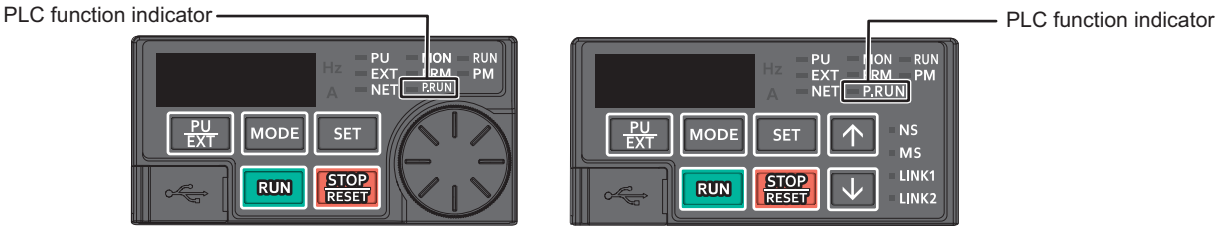

Operation panel of FR-E800 Operation panel of FR-E800-E, and FR-E800-SCE

P.RUN state

Indication		Status
FR-DU08 (LED) Operation panel of FR-E800 (LED)	**FR-DU08 (LCD) FR-PU07 (LCD)**	
OFF	OFF	PLC function disabled
ON	Normal indication	PLC function enabled
	Inverted indication	Sequence program running
Blinking	Inverted and blinking	Sequence error occurring

NOTE

- While the offline auto tuning is being activated by FR-PU07, P.RUN is not displayed even during PLC function operation.

1.5 PLC function specifications

The following table shows the program capacity and devices of the PLC function. Specifications in the following table may not be supported depending on the date of manufacture of the inverter. For details on applicable specifications, refer to page 8.

Item			A800/F800 PLC function specifications	E800 PLC function specifications
Control method			Repeated operation (by stored program)	
I/O control mode			Refresh	
Programming language			Relay symbolic language (ladder) Logic symbolic language Function block	Relay symbolic language (ladder) Logic symbolic language Function block Structured text (ST)
No. of instructions	Sequence instructions		25	
	Basic instructions		84	88
	Application instructions		37	
Processing speed			Sequence instructions 1.9 μs to 12 μs/step[*1]	
Number of I/O device points			288 (input: 144 points, output: 144 points) 19 points built-in (input: 12 points, output: 7 points)[*2],12 points built-in (input: 8 points, output: 4 points)[*2*3] FR-A8AX (input: 16 points) FR-A8AY (output: 7 points) FR-A8AR (output: 3 points)	288 (input: 144 points, output: 144 points) For FR-E800 series :10 points built-in (input: 7 points, output: 3 points)[*2] For FR-E800-E series : 3 points built-in (input: 2 points, output: 1 points)[*2] For FR-E800-SCE series : 1 points built-in (output: 1 points)[*2] FR-A8AX (input: 16 points) FR-A8AY (output: 7 points) FR-A8AR (output: 3 points)
Number of analog I/O points			3 input points built-in (Terminals 1, 2, and 4), FR-A8AZ: 1 input point (Terminal 6) 2 output points built-in (Terminals F/C(FM/CA) and AM), FR-A8AY: 2 output points (Terminals AM0 and AM1), FR-A8AZ: 1 output point (Terminal DA1)	2 input points built-in (Terminals 2 and 4) 2 output points built-in (Terminals FM and AM), FR-A8AY: 2 output points (Terminals AM0 and AM1)
Pulse train I/O		Input	Terminal JOG (maximum input pulse: 100k pulses/s)[*4]	—
		Output	Terminal FM (maximum output pulse: 50k pulses/s)[*4]	—
Watchdog timer			10 to 2000 ms	
Program capacity			6K steps (24k bytes) (0 to 6144 steps can be set), contained in one program	2K steps (8k bytes) (0 to 2048 steps can be set), contained in one program
Device	Internal relay (M)		128 (M0 to M127)	
	Latch relay (L)		Not used (Can be set with parameters but will not latch)[*5]	
	Timer (T)	Number of points	32 (T0 to T31)	16 (T0 to T15)
		Specifications	100 ms timer: 0.1 to 3276.7 s can be set 10 ms timer: 0.01 to 327.67 s can be set	
	Retentive timer (ST)	Number of points	16 (ST0 to ST15)[*7], 32 (ST0 to ST31)[*7]	16 (ST0 to ST15)[*7]
		Specifications	100 ms retentive timer: 0.1 to 3276.7 s can be set 10 ms retentive timer: 0.01 to 327.67 s can be set	
	Counter (C)	Number of points	32 (C0 to C31)	16 (C0 to C15)
		Specifications	Normal counter: Setting range 1 to 32767 Interrupt program counter: Not used	
	Data register (D)		256 (D0 to D255)	
	Pointer (P)		Not used	256 points (P0 to P127, P2048 to P2175[*6]) (All are common pointers.)
	Special relay (SM)		2048 (SM0 to SM2047) with limited functions	
	Special register (SD)		2048 (SD0 to SD2047) with limited functions	

*1 The scan time is approximately 40 ms for 1K steps as inverter control is also performed in actual operations.
*2 The signals same as the ones assigned to the inverter I/O terminals are used.
One point is always required for a sequence start (RUN/STOP).
*3 The number of points is changed when the FR-A8TP is installed.
*4 The **Pr.291 Pulse train I/O selection** setting is required. The pulse train output is only available for the FM type inverter.

*5 There is no device latch function for power failures.
Use the **Pr.1150 to Pr.1199 PLC function user parameters 1 to 50** (D206 to D255) to store device values in the EEPROM. (Refer to page 64.)

*6 P2048 to P2175 are used for automatic assignment. For details of automatic assignment, refer to GX Works2 Operating Manual (Simple Project).

*7 The initial value is "0".

NOTE

- There is no buffer memory.

1.6 System configuration

For writing sequence programs to the inverter, use FR Configurator2 (Developer) on the personal computer connected to the inverter. The inverter and the personal computer are connected via USB communication, RS-485 communication, or Ethernet communication.

The following figure shows the system configuration for use of the PLC function. For details of the supported communication methods, refer to the Instruction Manual of the inverter.

<System configuration example>

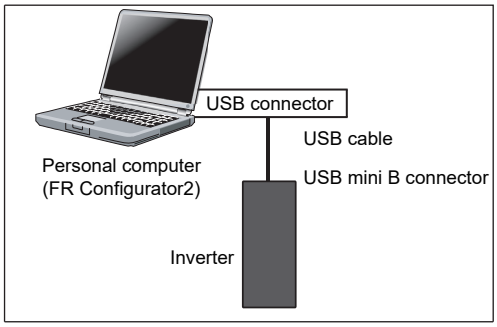

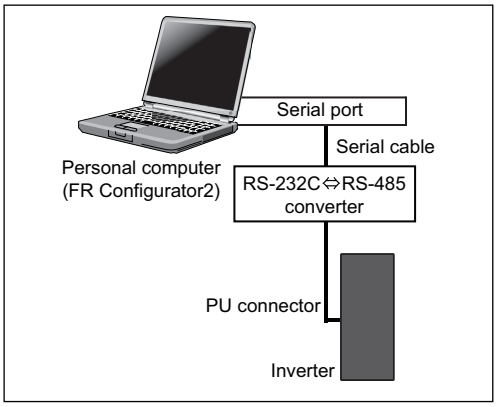

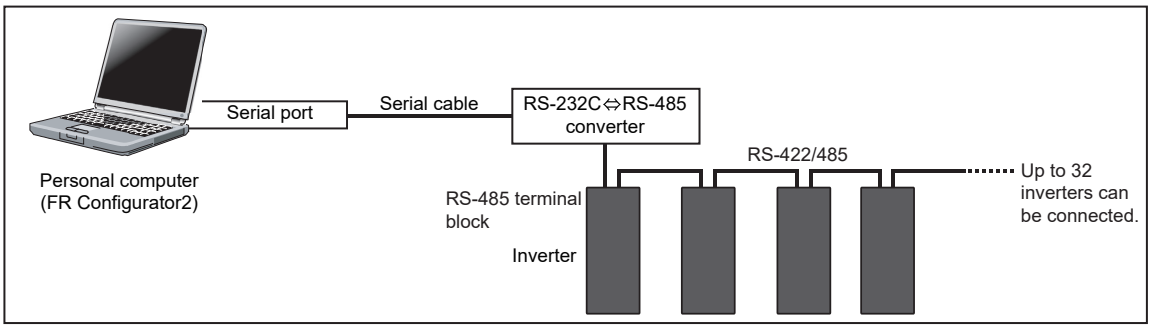

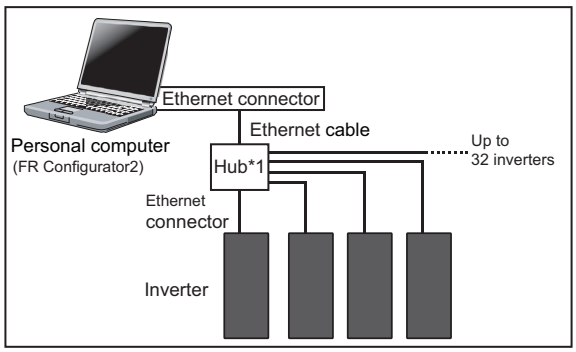

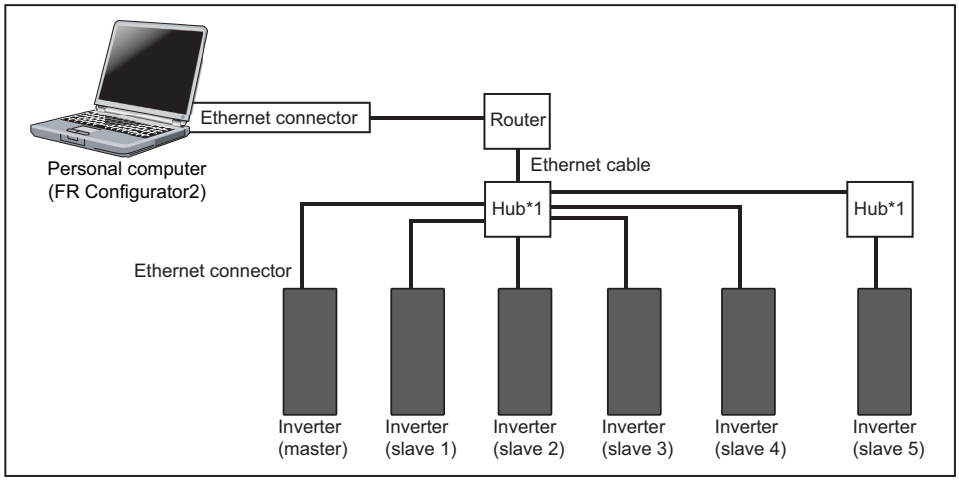

• Only the FR-A800 series, FR-A800 Plus series, and FR-F800 series are supported.

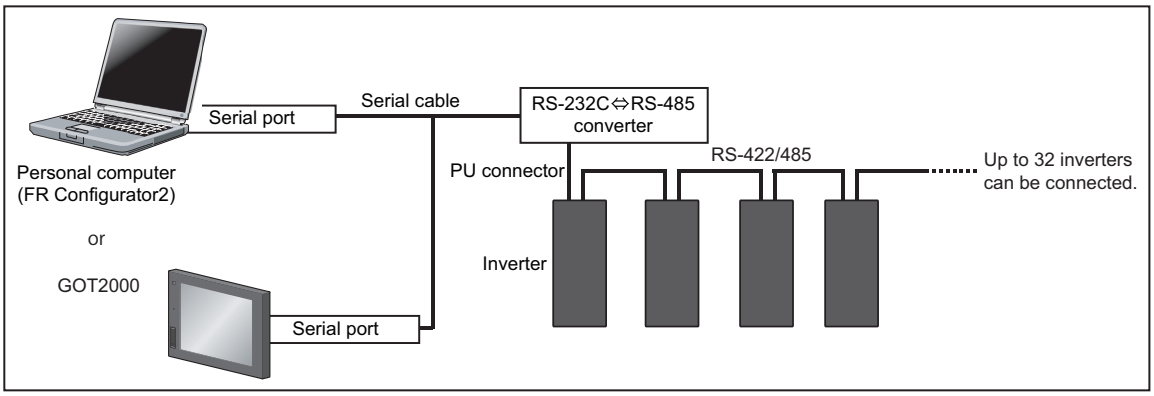

*1 When the inverters to which a sequence program is written are the FR-E800 series only and they are connected in a line, a hub is not required.

Commercially available products (as of February 2015)

- RS-232C ⇔ RS-485 conversion cable

Model	Manufacturer
Interface embedded cable dedicated for inverter DINV-CABV*1	Diatrend Corp.

*1 The conversion cable cannot connect multiple inverters. (The computer and inverted are connected in a 1:1 pair.) This product is a RS-232C ⇔ RS-485 conversion cable that has a built-in converter. No additional cable or connector is required. For the product details, contact the manufacturer.

- Recommended USB cable for connection between the personal computer and the inverter

Model	Manufacturer
MR-J3USBCBL3M (cable length: 3 m)	Mitsubishi Electric Corporation

Point

- FR Configurator2 (Developer) is a programming tool for designing and debugging of the sequence programs on the Windows personal computer. To use the PLC function of the inverter, write sequence programs to the inverter using FR Configurator2 (Developer). (For the details, refer to the Instruction Manual of FR Configurator2.)

NOTE

- For details on wiring, refer to the Instruction Manual of the inverter.
- For the specifications of the FR Configurator2 (Developer) and personal computers on which FR Configurator2 (Developer) runs, refer to the Instruction Manual of FR Configurator2.
- Programming tools other than FR Configurator2 (Developer) cannot be used. (Tools such as GX Developer and GX Works cannot be used.)
- Use Ethernet cables compliant with the following standards.

Communication speed	Cable	Connector	Standard
100 Mbps	Category 5 or higher, (shielded / STP) straight cable	RJ-45 connector	100BASE-TX
10 Mbps	Category 3 or higher, (shielded / STP) straight cable		10BASE-T
	Category 3 or higher, (UTP) straight cable		

- Use a hub that supports transmission speed of the Ethernet.

1.7 Operations of PLC function (Pr.414, Pr.415, Pr.498, Pr.1150 to Pr.1199)

I/O information can be read or written by accessing the inverter with special relays, special registers, etc. using predetermined methods.

It is possible to operate the inverter and read and write parameters using input information from control input terminals according to created sequence programs (saved in the inverter).

Output signals are also be output from control output terminals, not only as status signals of the inverter but as signals to turn the pilot lamp ON and OFF, interlock signals, and other control signals set by users as desired.

Parameter number	Name	Initial value	Setting range	Refer to page
414	PLC function operation selection	0	0 to 2, 11, 12	17
415	Inverter operation lock mode setting	0	0, 1	17
498	PLC function flash memory clear	0	0, 9696 (0 to 9999)	71
1150 to 1199	PLC function user parameters 1 to 50	0	0 to 65535	64

1.8 Prior to creating sequence programs

1.8.1 Precautions for creating sequence programs

Point

- Writing and access to other stations are not possible while a sequence program is running. Also, reading and writing the program from and to other stations cannot be performed.
- To avoid accidentally erasing the created sequence programs, use FR Configurator2 (Developer) to regularly save the data in a personal computer, etc.

If a sequence program contains instructions (refer to page 131) or devices (refer to page 11) that cannot be used with the PLC function, an instruction code error occurs at the execution of that instruction.
Error code SD0 = 4000
Error information SD5 to SD26
Error flag SM0: ON

NOTE

- For the error codes, refer to page 46.

1.8.2 The main functions of FR Configurator2 (Developer)

- Reading and writing parameter and sequence programs
- Ladder monitor
- Device batch monitor
- Present value change
- Remote RUN/STOP

NOTE

- Present values can be changed using FR Configurator2 (Developer) ([Debug] -> [Present value change]). Even if changes are made to the devices corresponding to the control terminal signals (STF, STR, etc.), such changes are not applied to the inverter operation. (Device present values of the sequence programs are changed.)

1.8.3 Sequence program execution

Parameter number	Name	Initial value	Setting range	Description	
414	PLC function operation selection	0	0	PLC function disabled	
			1, 11	PLC function enabled	For details, refer to the Instruction Manual of the inverter used.
			2, 12		
415	Inverter operation lock mode setting	0	0	The start signal of the inverter is enabled regardless of execution instruction of the sequence program.	
			1	The start signal of the inverter is enabled only when the sequence program is in RUN state. (The SQ signal is ON.) When the sequence program is in STOP state (the SQ signal is OFF), the inverter will not start even if the start signal STF or STR is turned ON. (If the state is changed from RUN to STOP during operation, the inverter decelerates and stops.)	

◆ Sequence start (SQ) signal

Switch the execution key (RUN/STOP) of the sequence program by turning the SQ signal ON/OFF. The sequence program can be executed by turning the SQ signal ON. To input the SQ signal, assign the signal to an input terminal.

- For FR-A800/FR-A800 Plus/F800 series

  When Pr.414 = "1 or 11", the SQ signal must be input according to the command source.

  When Pr.414 = "2 or 12", the SQ signal can be input only via an external input terminal regardless of the Pr.338 setting.

Pr.414 setting	Pr.338 setting	SQ signal	
		Input via an external (physical) terminal	Input via a communication virtual terminal
1, 11	0	ON	ON
	1	ON	
2, 12		ON	

- For FR-E800 series

  When **Pr.414** = "1 or 11", the SQ signal must be input according to the command source.

  When the SQ signal is assigned to terminal NET X (communication virtual terminal), the sequence program can be executed just by inputting the signal via terminal NET X. (The SQ signal needs not be input via an external terminal.)

  When **Pr.414** = "2 or 12", the SQ signal can be input only via an external input terminal regardless of the Pr.338 setting.

Pr.414 setting	Pr.338 setting	SQ signal	
		Input via an external (physical) terminal	Input via a communication virtual terminal
1, 11	0	ON	ON
			ON (NET X)
	1	ON	
2, 12		ON	

For the details, refer to the Instruction Manual of the inverter.

◆ PLC function operation selection (Pr.414)

- To enable the PLC function, set a value other than "0" in **Pr.414** PLC function operation selection **Pr.414 PLC function operation selection**. For details, refer to the Instruction Manual of the inverter used.
- Switch the execution key (RUN/STOP) of the sequence program by turning the SQ signal ON/OFF. The sequence program can be executed by turning the SQ signal ON. To input the SQ signal, set "50" in any of **Pr.178 to Pr.189 (input terminal function selection)** to assign the function to a terminal.

Remote RUN/STOP of the PLC function can be executed in any of the following methods:

- Using the PLC function parameters (contact)
- Using FR Configurator2 (Developer)
- Via CC-Link communication (refer to page 76.)

NOTE

- Turn OFF (STOP) the SQ signal when creating a sequence program.

- The RUN state output (Y) is internally stored and all outputs (Y) are turned OFF by turning the SQ signal OFF (STOP) after sequence program execution (SQ signal ON). The other devices retain the data prior to STOP. To clear the remaining device data, power OFF or reset (RES signal ON (0.1 s)→OFF) the inverter.

◆ Inverter operation lock mode setting (Pr.415)

- When "1" is set in **Pr.415 Inverter operation lock mode setting**, the inverter can be operated only when the sequence program is set to the "RUN" status. By changing the PLC program status from RUN to STOP during inverter operation, the motor decelerates to stop.

Point

- To run the inverter without using the PLC function, set **Pr.415** = "0" (initial value) (the start signal of the inverter is enabled).

NOTE

- This parameter cannot be written during inverter operation, regardless of the **Pr.77** setting.
- During automatic operation using SD1148 (or SM1200 to SM1211) in the sequence program, the inverter stops operation if the sequence program is in the STOP state while **Pr.415** = "1". However, when **Pr.415** = "0", the device data is retained and the operating status does not change (the inverter continues operation) even if the sequence program is in the STOP state.
- **Pr.415** setting is also enabled for the start signals of the operation panel.

1.8.4 Setting the communication parameter

Point

- For RS-485 communication between the inverter and FR Configurator2, communication cannot be established when the inverter communication parameter settings and the FR Configurator2 communication settings differ. For Ethernet connection, communication cannot be established when the application or protocol settings differ.

- Set "9999" in one of the following parameters according to the communication type: **Pr.122 PU communication check time interval** for communication via the PU connector, **Pr.336 RS-485 communication check time interval** for communication via the RS-485 terminals, or **Pr.1432 Ethernet communication check time interval** for Ethernet communication.
- Use the same settings for the inverter communication parameters (**Pr.118 to Pr.120, Pr.124, Pr.332 to Pr.334, and Pr.341**) and the FR Configurator2 communication settings.
- Initial values are shown below.

Item	FR Configurator2 initial value	Inverter communication parameters		
		Pr.	Parameter name	Initial value
Communication speed	19200(bps)	118	PU communication speed	192 (19200 bps)
		332	RS-485 communication speed*1	96 (9600 bps)
Data length/Stop bit	Data length : 8 bits Stop bit : 2 bits	119	PU communication stop bit length / data length	1 (data length: 8 bits, stop bit: 2 bits)
		333	RS-485 communication stop bit length / data length*1	
Parity	Even	120	PU communication parity check	2 (with even parity check)
		334	RS-485 communication parity check selection*1	
Communication check time interval	—	122	PU communication check time interval	9999 (without communication check)*2/ 0 (PU connector communication disabled)*3
		336	RS-485 communication check time interval*1	0 (Changing to NET operation mode disabled)
		1432	Ethernet communication check time interval	9999 (without communication check)
Delimiter	CR	124	PU communication CR/LF selection	1 (CR)
		341	RS-485 communication CR/LF selection*1	

*1 The parameter is valid only for the FR-A800 series, FR-A800 Plus series, and FR-F800 series.
*2 The initial value for the FR-A800 series, FR-A800 Plus series, and FR-F800 series.
*3 The initial value for the FR-E800 series.

NOTE

- Use the operation panel to change the settings of the inverter parameters. The operation panel and FR Configurator2 (personal computer) cannot be connected to the PU connector simultaneously.
- For details on inverter communication parameters, refer to the Instruction Manual (Detailed) of the inverter and the FR-E800 Instruction Manual (Communication). For the setting method of the [Detailed setting] of the [System setting] window of FR Configurator2, refer to the Instruction Manual of FR Configurator2.
- Parameter clear/All parameter clear clears communication parameter settings and may disable the communication with FR Configurator2 (Developer).
- For the Ethernet communication, refer to the Ethernet Function Manual and FR-E800 Instruction Manual (Communication).

1.8.5 Writing sequences programs

Point

- Sequence programs can be written in any operation mode (External operation mode, PU operation mode and Network operation mode). For the operation modes, refer to the Instruction Manual (Detailed) of the inverter and the FR-E800 Instruction Manual (Function).

Check the following points when rewriting the PLC function parameters and sequence programs using FR Configurator2 (Developer). (For the details, refer to the Instruction Manual of FR Configurator2.)

- The sequence program execution status is in the STOP (SQ signal OFF) (refer to page 17).
- The inverter is stopped.
- If any incorrect setting exists, communication with FR Configurator2 (Developer) is disabled. Check the communication parameter settings.

NOTE

- A sequence program cannot be written with its steps specified. The sequence program does not run if written in this way. (The program outside the specified range is initialized.)
- To read the PLC function parameters and sequence programs from the inverter, such information must be written to the inverter using FR Configurator2 (Developer) in advance. Always write the PLC function parameters and sequence program at least once as the inverter does not have valid data.
- There is a limitation on the number of times writing can be done (approximately 100,000 times) as the PLC function parameters and sequence program are written to the flash memory.
- A program with more than 6k steps (24k bytes) cannot be written.

1.9 Device map

1.9.1 I/O device map

◆ External input/output (FR-A800, FR-A800 Plus, and FR-F800 series)

	Device number	Name	Remarks	Device number	Name	Remarks
External input/ output	X00	Terminal STF	External terminal	Y00	Terminal RUN	External terminal
	X01	Terminal STR		Y01	Terminal SU	
	X02	Terminal RH		Y02	Terminal IPF	
	X03	Terminal RM		Y03	Terminal OL	
	X04	Terminal RL		Y04	Terminal FU	
	X05	Terminal JOG		Y05	Terminal ABC1	
	X06	Terminal RT		Y06	Terminal ABC2	
	X07	Terminal AU		Y07	Empty (for temporary retention)	
	X08	Terminal CS*1		Y08		
	X09	Terminal MRS		Y09		
	X0A	Terminal STP (STOP)		Y0A		
	X0B	Terminal RES		Y0B		
	X0C	Vacant (for temporary retention)		Y0C		
	X0D			Y0D		
	X0E			Y0E		
	X0F			Y0F		

*1 For the FR-F800 series, no function is assigned in the initial setting.

◆ External input/output (For FR-A800/FR-A800 Plus series with FR-A8TP installed)

	Device number	Name	Remarks	Device number	Name	Remarks
External input/ output	X00	Terminal STF	External terminal	Y00	Terminal RUN	External terminal
	X01	Terminal STR		Y01	Terminal SU	
	X02	Terminal DI3		Y02	Terminal IPF	
	X03	Terminal DI2		Y03	Empty (for temporary retention)	
	X04	Terminal DI1		Y04		
	X05	Terminal DI4		Y05	Terminal ABC1	External terminal
	X06	Empty (for temporary retention)		Y06	Empty (for temporary retention)	
	X07	Always OH	External terminal	Y07		
	X08	Empty (for temporary retention)		Y08		
	X09			Y09		
	X0A			Y0A		
	X0B	Terminal RES	External terminal	Y0B		
	X0C	Vacant (for temporary retention)		Y0C		
	X0D			Y0D		
	X0E			Y0E		
	X0F			Y0F		

◆ I/O device map

	Device number	Name	Remarks	Device number	Name	Remarks
Plug-in option I/O	X10	Terminal X0	16 bits digital input FR-A8AX	Y10	Terminal DO0	Digital output FR-A8AY
	X11	Terminal X1		Y11	Terminal DO1	
	X12	Terminal X2		Y12	Terminal DO2	
	X13	Terminal X3		Y13	Terminal DO3	
	X14	Terminal X4		Y14	Terminal DO4	
	X15	Terminal X5		Y15	Terminal DO5	
	X16	Terminal X6		Y16	Terminal DO6	
	X17	Terminal X7		Y17	Terminal RA1	Relay output FR-A8AR
	X18	Terminal X8		Y18	Terminal RA2	
	X19	Terminal X9		Y19	Terminal RA3	
	X1A	Terminal X10		Y1A	Empty (for temporary retention)	
	X1B	Terminal X11		Y1B		
	X1C	Terminal X12		Y1C		
	X1D	Terminal X13		Y1D		
	X1E	Terminal X14		Y1E		
	X1F	Terminal X15		Y1F		
System I/O	X20	Operation mode setting read complete	SD1140	Y20	Operation mode setting read command	SD1140
	X21	Set frequency read complete (RAM)	SD1141	Y21	Set frequency read command (RAM)	SD1141
	X22	Set frequency read complete (EEPROM)	SD1142	Y22	Set frequency read command (EEPROM)	SD1142
	X23	Operation mode setting write complete	SD1143	Y23	Operation mode setting write command	SD1143
	X24	Set frequency write complete (RAM)	SD1144	Y24	Set frequency write command (RAM)	SD1144
	X25	Set frequency write complete (EEPROM)	SD1145	Y25	Set frequency write command (EEPROM)	SD1145
	X26	Fault record batch clear complete	SD1146	Y26	Fault record batch clear command	SD1146
	X27	Parameter clear complete	SD1147	Y27	Parameter clear command	SD1147
	X28	Parameter read complete (RAM)	SD1241, SD1242, SD1234	Y28	Parameter read request (RAM)	SD1241, SD1242, SD1234
	X29	Parameter write complete (RAM)		Y29	Parameter write request (RAM)	
	X2A	Parameter read complete (EEPROM)	SD1243, SD1244, SD1235	Y2A	Parameter read request (EEPROM)	SD1243, SD1244, SD1235
	X2B	Parameter write complete (EEPROM)		Y2B	Parameter write request (EEPROM)	
	X2C	User parameter read complete (RAM)	D206 to D255 (**Pr.1150 to Pr.1199**)	Y2C	User parameter read (RAM)	D206 to D255 (**Pr.1150 to Pr.1199**)
	X2D	User parameter write complete (RAM)		Y2D	User parameter write (RAM)	
	X2E	User parameter read complete (EEPROM)		Y2E	User parameter read (EEPROM)	
	X2F	User parameter write complete (EEPROM)		Y2F	User parameter write (EEPROM)	

	Device number	Name	Remarks	Device number	Name	Remarks
CC-Link I/O Remote I/O	X30	RY0	Refer to page 77.	Y30	RX0	Refer to page 77.
	X31	RY1		Y31	RX1	
	X32	RY2		Y32	RX2	
	X33	RY3		Y33	RX3	
	X34	RY4		Y34	RX4	
	X35	RY5		Y35	RX5	
	X36	RY6		Y36	RX6	
	X37	RY7		Y37	RX7	
	X38	RY8		Y38	RX8	
	X39	RY9		Y39	RX9	
	X3A	RYA		Y3A	RXA	
	X3B	RYB		Y3B	RXB	
	X3C	RYC		Y3C	RXC	
	X3D	RYD		Y3D	RXD	
	X3E	RYE		Y3E	RXE	
	X3F	RYF		Y3F	RXF	

◆ FR-E800 series

	Device number	Name	Remarks	Device number	Name	Remarks
External input/ output	X00	Terminal STF[*1*4]	External terminal	Y00	Terminal RUN[*3*4]	External terminal
	X01	Terminal STR[*2*4]		Y01	Empty (for temporary retention)	
	X02	Terminal RH[*3*4]		Y02	Terminal NET Y1	NET terminal
	X03	Terminal RM[*3*4]		Y03	Empty (for temporary retention)	
	X04	Terminal RL[*3*4]		Y04	Terminal FU[*3*4]	External terminal
	X05	Vacant (for temporary retention)		Y05	Terminal ABC	
	X06			Y06	Terminal NET Y2	NET terminal
	X07			Y07	Terminal NET Y3	
	X08	Terminal NET X1	NET terminal	Y08	Terminal NET Y4	
	X09	Terminal MRS[*3*4]	External terminal	Y09	Empty (for temporary retention)	
	X0A	Terminal NET X2	NET terminal	Y0A		
	X0B	Terminal RES[*3*4]	External terminal	Y0B		
	X0C	Terminal NET X3	NET terminal	Y0C		
	X0D	Terminal NET X4		Y0D		
	X0E	Terminal NET X5		Y0E		
	X0F	Vacant (for temporary retention)		Y0F		
Plug-in option I/ O	X10	Terminal X0	16 bits digital input FR-A8AX	Y10	Terminal DO0	Digital output FR-A8AY
	X11	Terminal X1		Y11	Terminal DO1	
	X12	Terminal X2		Y12	Terminal DO2	
	X13	Terminal X3		Y13	Terminal DO3	
	X14	Terminal X4		Y14	Terminal DO4	
	X15	Terminal X5		Y15	Terminal DO5	
	X16	Terminal X6		Y16	Terminal DO6	
	X17	Terminal X7		Y17	Terminal RA1	Relay output FR-A8AR
	X18	Terminal X8		Y18	Terminal RA2	
	X19	Terminal X9		Y19	Terminal RA3	
	X1A	Terminal X10		Y1A	Empty (for temporary retention)	
	X1B	Terminal X11		Y1B		
	X1C	Terminal X12		Y1C		
	X1D	Terminal X13		Y1D		
	X1E	Terminal X14		Y1E		
	X1F	Terminal X15		Y1F		

	Device number	Name	Remarks	Device number	Name	Remarks
System I/O	X20	Operation mode setting read complete	SD1140	Y20	Operation mode setting read command	SD1140
	X21	Set frequency read complete (RAM)	SD1141	Y21	Set frequency read command (RAM)	SD1141
	X22	Set frequency read complete (EEPROM)	SD1142	Y22	Set frequency read command (EEPROM)	SD1142
	X23	Operation mode setting write complete	SD1143	Y23	Operation mode setting write command	SD1143
	X24	Set frequency write complete (RAM)	SD1144	Y24	Set frequency write command (RAM)	SD1144
	X25	Set frequency write complete (EEPROM)	SD1145	Y25	Set frequency write command (EEPROM)	SD1145
	X26	Fault record batch clear complete	SD1146	Y26	Fault record batch clear command	SD1146
	X27	Parameter clear complete	SD1147	Y27	Parameter clear command	SD1147
	X28	Parameter read complete (RAM)	SD1241, SD1242, SD1234	Y28	Parameter read request (RAM)	SD1241, SD1242, SD1234
	X29	Parameter write complete (RAM)		Y29	Parameter write request (RAM)	
	X2A	Parameter read complete (EEPROM)	SD1243, SD1244, SD1235	Y2A	Parameter read request (EEPROM)	SD1243, SD1244, SD1235
	X2B	Parameter write complete (EEPROM)		Y2B	Parameter write request (EEPROM)	
	X2C	User parameter read complete (RAM)	D206 to D255 (**Pr.1150 to Pr.1199**)	Y2C	User parameter read (RAM)	D206 to D255 (**Pr.1150 to Pr.1199**)
	X2D	User parameter write complete (RAM)		Y2D	User parameter write (RAM)	
	X2E	User parameter read complete (EEPROM)		Y2E	User parameter read (EEPROM)	
	X2F	User parameter write complete (EEPROM)		Y2F	User parameter write (EEPROM)	
CC-Link I/O Remote I/O	X30	RY0	Refer to page 77.	Y30	RX0	Refer to page 77.
	X31	RY1		Y31	RX1	
	X32	RY2		Y32	RX2	
	X33	RY3		Y33	RX3	
	X34	RY4		Y34	RX4	
	X35	RY5		Y35	RX5	
	X36	RY6		Y36	RX6	
	X37	RY7		Y37	RX7	
	X38	RY8		Y38	RX8	
	X39	RY9		Y39	RX9	
	X3A	RYA		Y3A	RXA	
	X3B	RYB		Y3B	RXB	
	X3C	RYC		Y3C	RXC	
	X3D	RYD		Y3D	RXD	
	X3E	RYE		Y3E	RXE	
	X3F	RYF		Y3F	RXF	

*1 Terminal DI0 for FR-E800-E.
*2 Terminal DI1 for FR-E800-E.
*3 Empty (for temporary retention) for FR-E800-E.
*4 Empty (for temporary retention) for FR-E800-SCE.

1.9.2 Ethernet I/O device map (master)

Device No.	Name	Remarks	Device No.	Name	Remarks
X40 to X4F	Inverter-to-inverter link input (from slave 1 to master)	Ethernet	Y40 to Y4F	Inverter-to-inverter link output (from master to slave 1)	Ethernet
X50 to X5F	Inverter-to-inverter link input (from slave 2 to master)		Y50 to Y5F	Inverter-to-inverter link output (from master to slave 2)	
X60 to X6F	Inverter-to-inverter link input (from slave 3 to master)		Y60 to Y6F	Inverter-to-inverter link output (from master to slave 3)	
X70 to X7F	Inverter-to-inverter link input (from slave 4 to master)		Y70 to Y7F	Inverter-to-inverter link output (from master to slave 4)	
X80 to X8F	Inverter-to-inverter link input (from slave 5 to master)		Y80 to Y8F	Inverter-to-inverter link output (from master to slave 5)	

1.9.3 Ethernet I/O device map (slave)

Device No.	Name	Remarks	Device No.	Name	Remarks
X40 to X4F	Inverter-to-inverter link input (from master to slave)	Ethernet	Y40 to Y4F	Inverter-to-inverter link output (from slave to master)	Ethernet

1.9.4 Internal relay (M) device map

Device number	Description
M0 to M127	Available for users.

1.9.5 Data register (D) device map

Device number	Description	Refer to page
D0 to D205	Available for users.	—
D206 to D255	**Pr.1150 to Pr.1199** Parameters for user setting. Available for users.	64

1.9.6 Special relay

Special relay is an internal relay whose application is already determined in the PLC function. Therefore, do not turn ON/OFF the special relay in the program.

Device number	Name	Description	Supported model		
			A800 (Plus)	F800	E800
SM0	Diagnostic error	Turned ON when a diagnostic error has been detected. ON status is retained even after the condition becomes normal.	○	○	○
SM1	Self-diagnostic error	Turned ON when an error is detected by self diagnosis. ON status is retained even after the condition becomes normal.	○	○	○
SM5	Common error information	When SM5 is turned ON, common error information (SD5 to SD15) is stored.	○	○	○
SM16	Individual error information	When SM16 is turned ON, individual error information (SD16 to SD26) is stored.	○	○	○
SM56	Operation error flag	Turned ON when an operation error is detected during instruction execution. ON status is retained even after the condition becomes normal.	○	○	○
SM210	Clock data setting request	At OFF to ON of SM210, the clock data stored in SD210 to SD213 are written to the inverter.	○	○	○
SM211	Clock data error	Turned ON when the clock data (SD210 to SD213) has an error or is not a BCD value.	○	○	○
SM213	Clock data read request	Clock data is read and stored as BCD value in SD210 to SD213 when this relay is turned ON. The process is not executed when the relay is OFF.	○	○	○
SM400	Always ON	SM400 and SM401 are respectively turned ON and OFF regardless of the STOP and RUN statuses.	○	○	○
SM401	Always OFF		○	○	○
SM402	ON only for one scan after RUN	SM402 and SM403 change depending on the STOP and RUN statuses. In the cases other than STOP: SM402 is ON only for one scan. SM403 is OFF only for one scan.	○	○	○
SM403	OFF only for one scan after RUN		○	○	○
SM1200	Inverter operating status control flag (STF)	Flag used for controlling the inverter terminal STF.[*1*5]	○	○	○
	Inverter operating status control flag (DI0)	Flag used for controlling the inverter terminal DI0.[*1*6]			○
SM1201	Inverter operating status control flag (STR)	Flag used for controlling the inverter terminal STR.[*2*5]	○	○	○
	Inverter operating status control flag (DI1)	Flag used for controlling the inverter terminal DI1.[*2*6]			○
SM1202	Inverter operating status control flag (RH/DI3[*7])	Flag used for controlling the inverter terminal RH/DI3.	○	○	○
SM1203	Inverter operating status control flag (RM/DI2[*7])	Flag used for controlling the inverter terminal RM/DI2.	○	○	○
SM1204	Inverter operating status control flag (RL/DI1[*7])	Flag used for controlling the inverter terminal RL./DI1.	○	○	○
SM1205	Inverter operating status control flag (JOG/DI4[*7])	Flag used for controlling the inverter terminal JOG/DI4.	○	○	
SM1206	Inverter operating status control flag (RT)	Flag used for controlling the inverter terminal RT.	○	○	
SM1207	Inverter operating status control flag (AU)	Flag used for controlling the inverter terminal AU.	○	○	

Device number	Name	Description	Supported model		
			A800 (Plus)	F800	E800
SM1208	Inverter operating status control flag (CS)[*4]	Flag used for controlling the inverter terminal CS.	○	○	
	Inverter operating status control flag (NET X1)	Flag used for controlling the inverter terminal NET X1.			○
SM1209	Inverter operating status control flag (MRS)	Flag used for controlling the inverter terminal MRS.	○	○	○
SM1210	Inverter operating status control flag STP (STOP)	Flag used for controlling the inverter terminal STP (STOP).	○	○	
	Inverter operating status control flag (NET X2)	Flag used for controlling the inverter terminal NET X2.			○
SM1211	Inverter operating status control flag (RES)	Flag used for controlling the inverter terminal RES.	○	○	○
SM1212	Inverter operating status control flag (NET X3)	Flag used for controlling the inverter terminal NET X3.			○
SM1213	Inverter operating status control flag (NET X4)	Flag used for controlling the inverter terminal NET X4.			○
SM1214	Inverter operating status control flag (NET X5)	Flag used for controlling the inverter terminal NET X5.			○
SM1216	Inverter status (RUN)	Inverter running	○	○	○
SM1217	Inverter status (FWD)	Forward rotation	○	○	○
SM1218	Inverter status (REV)	Reverse rotation	○	○	○
SM1219	Inverter status (SU)	Up to frequency	○	○	○
SM1220	Inverter status (OL)	Overload alarm	○	○	○
SM1221	Inverter status (IPF)	Instantaneous power failure/undervoltage	○	○	
SM1222	Inverter status (FU)	Output frequency detection	○	○	○
SM1223	Inverter status (ALM)	Fault output	○	○	○
SM1224	Inverter status (LF)	Warning output	○	○	○
SM1225	Inverter status (DO0)	Stores the operating status of an output terminal function assigned by **Pr.313**.[*3]	○	○	○
SM1226	Inverter status (DO1)	Stores the operating status of an output terminal function assigned by **Pr.314**.[*3]	○	○	○
SM1227	Inverter status (DO2)	Stores the operating status of an output terminal function assigned by **Pr.315**.[*3]	○	○	○
SM1228	Inverter status (DO3)	Stores the operating status of an output terminal function assigned by **Pr.316**.[*3]	○	○	○
SM1229	Inverter status (DO4)	Stores the operating status of an output terminal function assigned by **Pr.317**.[*3]	○	○	○
SM1230	Inverter status (DO5)	Stores the operating status of an output terminal function assigned by **Pr.318**.[*3]	○	○	○
SM1231	Inverter status (DO0)	Stores the operating status of an output terminal function assigned by **Pr.319**.[*3]	○	○	○
SM1232	Inverter status (RA1)	Stores the operating status of an output terminal function assigned by **Pr.320**.[*3]	○	○	○
SM1233	Inverter status (RA2)	Stores the operating status of an output terminal function assigned by **Pr.321**.[*3]	○	○	○

Device number	Name	Description	Supported model		
			A800 (Plus)	F800	E800
SM1234	Inverter status (RA3)	Stores the operating status of an output terminal function assigned by **Pr.322**.*3	○	○	○
SM1235	Safety monitor (terminal SO)	The safety monitor (terminal SO) status is stored. This is turned ON when no internal safety circuit failure has occurred.	○	○	○
SM1236	Inverter status (NET Y1)	Stores the operating status of an output terminal function assigned by **Pr.193**.			○
SM1237	Inverter status (NET Y2)	Stores the operating status of an output terminal function assigned by **Pr.194**.			○
SM1238	Inverter status (NET Y3)	Stores the operating status of an output terminal function assigned by **Pr.195**.			○
SM1239	Inverter status (NET Y4)	Stores the operating status of an output terminal function assigned by **Pr.196**.			○
SM1255	Inverter operating status control selection	Select the inverter operating status of SM1200 to SM1211 and SD1148. OFF: Special relay selection ON: Special register selection	○	○	○
SM1256	2-word parameter access notice	Turned ON when parameter read for the inverter is executed using X28 to X2B, Y28 to Y2B, and the object was 2-word parameter. OFF: Read is completed as 1-word parameter. ON: Read is completed as 2-word parameter.	○	○	○
SM1257	2-word parameter access setting	Set the object as 2 word parameter when inverter parameter write is executed using X28 to X2B, Y28 to Y2B. OFF: Carries out writing as 1-word parameter. ON: Carries out writing as 2-word parameter.	○	○	○
SM1258	Clock data setting completion flag	Turned ON when the clock data is set using an external peripheral device, parameter, or SM210. This is turned OFF when SM213 is turned ON.	○	○	○

*1 Always set to the STF signal in the Network operation mode. Changing the function with **Pr.178** is disabled.
*2 Always set to the STR signal in the Network operation mode. Changing the function with **Pr.179** is disabled.
*3 Even if the FR-A8AY or FR-A8AR is not installed, **Pr.313 to Pr.322** are accessible during PLC function operation, and the operating status of the output terminal (virtual output terminal) function is stored in each device.
*4 For the FR-F800 series, no function is assigned in the initial setting.
*5 Available only for the RS-485 model.
*6 Available only for the Ethernet model.
*7 The terminal name is the one used when the FR-A8TP is installed to the FR-A800/FR-A800 Plus series inverter.

1.9.7 Special register

Special register is a data register in which the application is already determined in the PLC function. Therefore, do not write data into the special register on the program.

Device number		Name	Description	Page	Supported model			
					A800	A800 Plus	F800	E800
Special register	SD0	Self-diagnostic error	Error code is stored when an error is detected by self diagnosis.	46	○	○	○	○
	SD1	Clock time for diagnosis error occurrence	The year (the last two digits of the year) and the month when the SD0 data is updated are stored in 2-digit BCD code. b15 to b8 b7 to b0 Year (0 to 99) | Month (1 to 12)	—	○	○	○	○
	SD2		The day and the hour when the SD0 data is updated are stored in 2-digit BCD code. b15 to b8 b7 to b0 Day (1 to 31) | Hour (0 to 23)	—	○	○	○	○
	SD3		The minute and the second when the SD0 data is updated are stored in 2-digit BCD code. b15 to b8 b7 to b0 Minute (0 to 59) | Second (0 to 59)	—	○	○	○	○
	SD4	Error information category	Stores the category codes that show the type of error information stored in the common information (SD5 to SD15) and the individual information (SD16 to SD26). b15 to b8 b7 to b0 Individual error information | Common error information The following codes are stored in the common information category code. Value: 0 Code: Not used Value: 2 Code: File name/drive name Value: 3 Code: Time (setting value) Value: 4 Code: Program error location The following codes are stored in the individual information category code. Value: 0 Code: Not used Value: 3 Code: Time (actual measurement value) Value: 5 Code: Parameter number	—	○	○	○	○
	SD5 to SD15	Common error information	When the common information category code is 2, the file name or drive name are stored in SD5 to SD11. Number: SD5 Description: Drive name. Number: SD6, SD7, SD8, SD9 Description: File name (ASCII code: 8 characters) Number: SD10 Description: Extension (ASCII code: 3 characters) $2E_H$(.) Number: SD11 Description: (ASCII code: 3 characters) Number: SD12 to SD15 Description: Empty The step numbers where errors occurred are stored in SD14 and SD15.	—	○	○	○	○

Device number		Name	Description	Page	Supported model			
					A800	A800 Plus	F800	E800
Special register	SD5 to SD15	Common error information	When the common information category code is 3, the time (setting value) is stored in SD5 and SD6. Number / Description SD5: Time: in 1 μs increments (0 to 999 μs) SD6: Time: in 1 ms increments (0 to 65535 ms) SD7 to SD15: Empty	—	○	○	○	○
	SD5 to SD15	Common error information	When the common information category code is 4, the program error location is stored in SD5 to SD15. Number / Description SD5, SD6, SD7, SD8: File name MAIN *1 (ASCII code: 8 characters) SD9: Extension 2E$_H$(.) SD10: QPG (ASCII code: 3 characters) SD11: Always 0 SD12: Always 0 SD13: Always 0 SD14: Sequence step No.(L) SD15: Sequence step No.(H) The step numbers where errors occurred are stored in SD14 and SD15.	—	○	○	○	○
	SD16 to SD26	Individual error information	When the individual information category code is 3, the time (actual measured data) is stored in SD16 and SD17. Number / Description SD16: Time: in 1 μs increments (0 to 999 μs) SD17: Time: in 1 ms increments (0 to 65535 ms) SD18 to SD26: Empty	—	○	○	○	○
			When the individual information category code is 5, the parameter number is stored in SD16. Number / Description SD16: Parameter number SD17 to SD26: Empty	—	○	○	○	○
	SD203	CPU module operating status	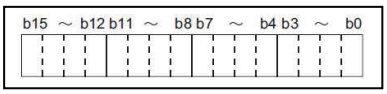 bit / Item / Value / Description b3 to b0: CPU module operating status: 0 RUN; 2 STOP b7 to b4: STOP/RUN factor: 0 Switch; 1 Remote contact; 2 Remote operation from the peripheral S/W for the programmable controller; 4 Stop error	—	○	○	○	○
	SD210	Clock data	Year (the last two digits of the year) is stored in BCD code. 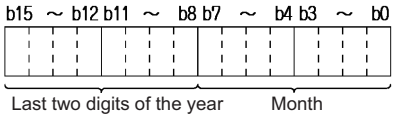 	—	○	○	○	○
	SD211	Clock data	Minute and second are stored in BCD code. 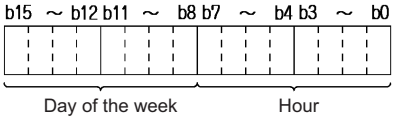 	—	○	○	○	○

Device number		Name		Description	Page	Supported model			
						A800	A800 Plus	F800	E800
Special register	SD212	Clock data		Minute and second are stored in BCD code. 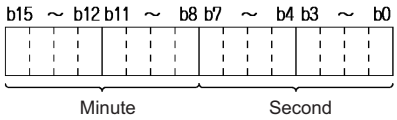 	—	○	○	○	○
	SD213	Clock data		Year (the first two digits of the year) and day of the week are stored in BCD code. 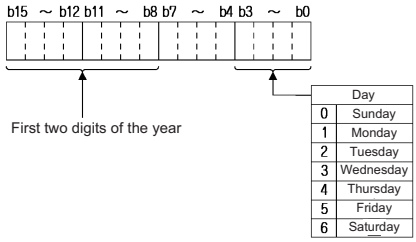 	—	○	○	○	○
	SD286 SD287	Device assignment	Number of points assigned for M (for extension)	Always 8192	—	○	○	○	○
	SD288 SD289		Number of points assigned for B (for extension)	Always 8192	—	○	○	○	○
	SD290		Number of points assigned for X	Always 8192	—	○	○	○	○
	SD291		Number of points assigned for Y	Always 8192	—	○	○	○	○
	SD292		Number of points assigned for M	Always 8192	—	○	○	○	○
	SD293		Number of points assigned for L	Always 8192	—	○	○	○	○
	SD294		Number of points assigned for B	Always 8192	—	○	○	○	○
	SD295		Number of points assigned for F	Always 2048	—	○	○	○	○
	SD296		Number of points assigned for SB	Always 2048	—	○	○	○	○
	SD297		Number of points assigned for V	Always 2048	—	○	○	○	○
	SD298		Number of points assigned for S	Always 8192	—	○	○	○	○

Device number		Name		Description	Page	Supported model			
						A800	A800 Plus	F800	E800
Special register	SD299	Device assignment	Number of points assigned for T	Always 2048	—	○	○	○	○
	SD300		Number of points assigned for ST	The number of points currently set for ST (0 to 16 or 0 to 32) is stored. The number of settable points differs depending on the inverter. For details, refer to page 8.	—	○	○	○	○
	SD301		Number of points assigned for C	Always 1024	—	○	○	○	○
	SD302		Number of points assigned for D	Always 12288	—	○	○	○	○
	SD303		Number of points assigned for W	Always 8192	—	○	○	○	○
	SD304		Number of points assigned for SW	Always 2048	—	○	○	○	○
	SD305		Number of points assigned for Z	Always 20	—	○	○	○	○
	SD306 SD307		Number of points assigned for ZR	Always 0	—	○	○	○	○
	SD308 SD309		Number of points assigned for D	Always 12288	—	○	○	○	○
	SD310 SD311		Number of points assigned for W	Always 8192	—	○	○	○	○
	SD520	Current scan time		Scan time is stored at every END, and is constantly updated. (Measured in 100 μs increments) SD520: Stores the millisecond places (Stored range: 0 to 65535) SD521: Stores the microsecond places (Stored range: 0 to 900)	—	○	○	○	○
	SD521				—	○	○	○	○
	SD524	Minimum scan time		Minimum scan time is stored at every END. (Measured in 100 μs increments) SD524: Stores the millisecond places (Stored range: 0 to 65535) SD525: Stores the microsecond places (Stored range: 0 to 900)	—	○	○	○	○
	SD525				—	○	○	○	○
	SD526	Maximum scan time		Maximum scan time is stored at every END. (Measured in 100 μs increments) SD526: Stores the millisecond places (Stored range: 0 to 65535) SD527: Stores the microsecond places (Stored range: 0 to 900)	—	○	○	○	○
	SD527				—	○	○	○	○
	SD1062 to SD1093	Remote register		Special register for communicating with the master station in CC-Link.	77	○	○	○	○
	SD1133	Output frequency monitor		Present output frequency is stored. The increment is 0.01 Hz.*11	44	○	○	○	○
	SD1134	Output current monitor		Present output current is stored. The increment is 0.01 A.					
	SD1135	Output voltage monitor		Present output current is stored. The increment is 0.01 A.					

Device number		Name	Description	Page	Supported model			
					A800	A800 Plus	F800	E800
Special register for control	SD1136	Fault record 1, 2	Faults in the inverter are stored in the order of occurrence.	44	○	○	○	○
	SD1137	Fault record 3, 4			○	○	○	○
	SD1138	Fault record 5, 6			○	○	○	○
	SD1139	Fault record 7, 8			○	○	○	○
	SD1140	Operation mode setting read	Stores the present operation mode.	48	○	○	○	○
	SD1141	Set frequency read (RAM)	Reads and stores the set frequency (RAM).*11	48	○	○	○	○
	SD1142	Set frequency read (EEPROM)	Reads and stores the set frequency (EEPROM).*11	49	○	○	○	○
	SD1143	Operation mode setting write	Sets the operation mode to be changed.	51	○	○	○	○
	SD1144	Set frequency write (RAM)	Sets the running frequency (RAM).*11	52	○	○	○	○
	SD1145	Set frequency write (EEPROM)	Sets the running frequency (EEPROM).*11	53	○	○	○	○
	SD1146	Fault record batch clear	Clears the fault history when H9696 is written.	54	○	○	○	○
	SD1147	Parameter clear	H9696 write: parameter clear H9966 write: all clear H5A5A write: parameter clear except for communication parameters H55AA write: all clear except for communication parameters	54	○	○	○	○

Device number		Name	Description	Page	Supported model			
					A800	A800 Plus	F800	E800
Special register for control	SD1148	Inverter operating status control	Turn ON/OFF the corresponding bit to control the inverter operating status. All initial values are set as "0". When SM1255 is OFF, this function is disabled. For FR-A800/FR-A800 Plus/FR-F800 series 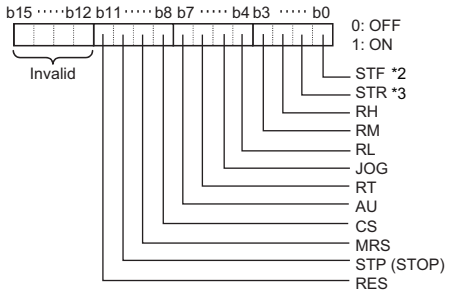 For FR-A800/FR-A800 Plus series with FR-A8TP installed 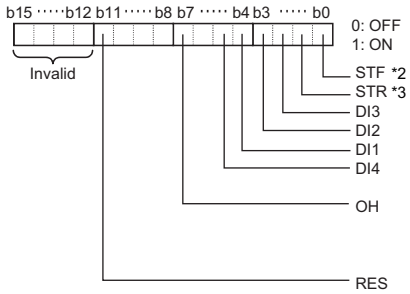 For FR-E800 series 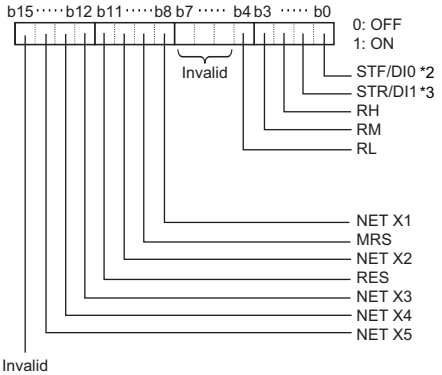 	55	○	○	○	○
	SD1149	Inverter operating status control enable/disable setting	The inverter operating status control by SD1148 and SM1200 to SM1211 can be enabled/disabled by turning ON/OFF the corresponding bit. The bit table is the same as SD1148. All initial values are set to "0" (invalid). Input through external terminals is always enabled for the SQ signal. (The SQ signal cannot be controlled with SD1149 bits.)	56	○	○	○	○
	SD1150	Inverter parameter access error	Stores the error number generated when parameter or data stored in the special register was not successfully reflected to the inverter.	57	○	○	○	○

Device number		Name	Description	Page	Supported model			
					A800	A800 Plus	F800	E800
Special register for control	SD1151	Inverter status	Operating status of the inverter is stored. 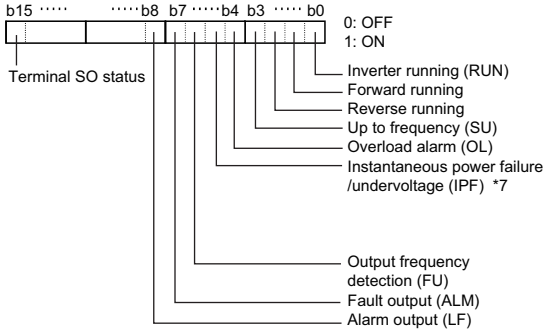 	57	○	○	○	○
	SD1152	Frequency setting value	The set frequency is stored.*11	—	○	○	○	○
	SD1153	Running speed	1 (0.1) r/min increments **Pr.811 Set resolution switchover** enables 0.1 r/min unit indication*4	—	○	○	○	○
	SD1154	Motor torque	0.1% increments	—	○	○	○	○
	SD1155	Converter output voltage	0.1 V increments	—	○	○	○	○
	SD1156	Regenerative brake duty	0.1% increments	—	○	○		
	SD1157	Electric thermal relay load factor	0.1% increments	—	○	○	○	○
	SD1158	Output power peak value	0.01 A increments	—	○	○	○	○
	SD1159	Converter output voltage peak value	0.1 V increments	—	○	○	○	○
	SD1160	Input power	0.01 kW increments	—	○	○	○	○
	SD1161	Output power	0.01 kW increments	—	○	○	○	○
	SD1162	Input terminal status	Details of input terminal status For FR-A800/FR-A800 Plus/FR-F800 series 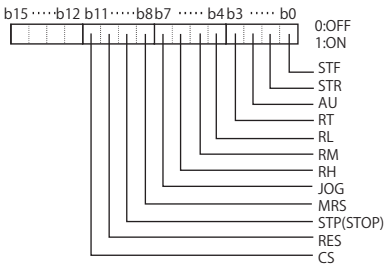 For FR-A800/FR-A800 Plus series with FR-A8TP installed 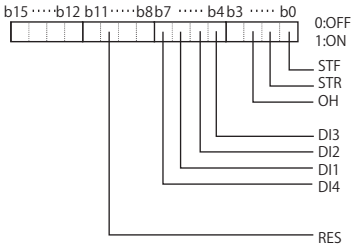 For FR-E800 series 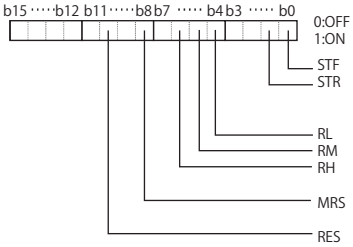 	—	○	○	○	○

Device number		Name	Description	Page	Supported model			
					A800	A800 Plus	F800	E800
Special register for control	SD1163	Output terminal status	Details of output terminal status For FR-A800/FR-A800 Plus/FR-F800 series 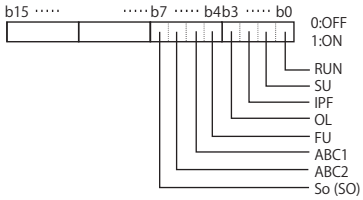 For FR-A800/FR-A800 Plus series with FR-A8TP installed 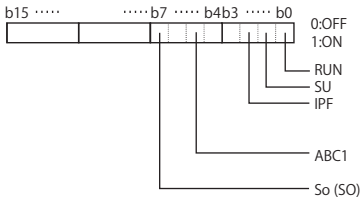 For FR-E800 series 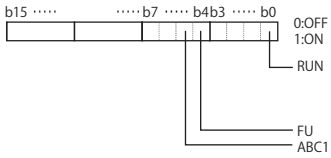 	—	○	○	○	○
	SD1164	Load meter	Stores the load meter. 0.1% increments	—	○	○		○
	SD1165	Motor excitation current	0.01 A increments	—	○	○	○	○
	SD1166	Position pulse	Stores the encoder position pulse	—	○	○		○
		Analog output signal for dancer tension control	Stores the dancer tension command	—		○*5		
	SD1167	Cumulative energization time	1 hour increments	—	○	○	○	○
	SD1168	Ideal speed command	0.01 Hz increments*11	—				○
	SD1169	Orientation status	Stores the orientation status.	—	○	○		
		Winding length	Stores the winding length.	—		○*5		
	SD1170	Actual operation time	1 hour increments	—	○	○	○	○
	SD1171	Motor load factor	0.1% increments	—	○	○	○	○
	SD1172	Cumulative power	1 kWh increments	—	○	○	○	○
	SD1173	Position command (lower 16 bits)	Stores the position command setting value (lower 16 bits).	—	○*8	○		○*8
		Line speed command	Stores the line speed command.	—		○*5		
	SD1174	Position command (upper 16 bits)	Stores the position command setting value (upper 16 bits). (monitor range: 0 to 65535)*9 (monitor range: -2147483647 to 2147483647)*10	—	○*8	○		○*8
		Actual line speed	Stores the actual line speed.	—		○*5		
	SD1175	Current position (lower 16 bits)	Stores the position feedback pulse value (lower 16 bits). (monitor range: 0 to 65535)*9	—	○*8	○		○*8
		Dancer compensation speed	Stores the dancer compensation speed	—		○*5		
	SD1176	Current position (upper 16 bits)	Stores the position feedback pulse value (upper 16 bits). (monitor range: 0 to 65535)*9 (monitor range: -2147483647 to 2147483647)*10	—	○*8	○		○*8
		Winding length	Stores the winding length.	—		○*5		
	SD1177	Droop pulse (lower 16 bits)	Stores the droop pulse value (lower 16 bits). (monitor range: 0 to 65535)*9	—	○*8	○		○*8
		Analog output signal 2 for dancer tension control	Stores the dancer tension command.	—		○*5		

Device number		Name	Description	Page	Supported model			
					A800	A800 Plus	F800	E800
Special register for control	SD1178	Droop pulse (upper 16 bits)	Stores the droop pulse value (upper 16 bits). (monitor range: 0 to 65535)[*9] (monitor range: -2147483647 to 2147483647)[*10]	—	○[*8]	○		○[*8]
		Line speed pulse monitor	Stores the pulse train input	—		○[*5]		
	SD1179	Torque command	0.1% increments	—	○	○		○
	SD1180	Torque current command	0.1% increments	—	○	○		○
	SD1181	Motor output	0.1 kW increments	—	○	○	○	
	SD1182	Feedback pulse	Stores the feedback pulse quantity.	—	○	○		○
	SD1183	SSCNET III communication status	Stores the SSCNET III communication status.	—	○	○		
	SD1184	Station number (PU connector)	Stores the station number (PU connector).	—	○	○	○	○
	SD1185	Station number (RS-485 terminal block)	Stores the station number (RS-485 terminal block).	—	○	○	○	
	SD1186	Station number (CC-Link)	Stores the communication station number (CC-Link).	—	○	○	○	○
	SD1187	Remote output 1	Stores the analog remote output setting value 1.	—	○	○	○	
	SD1188	Remote output 2	Stores the analog remote output setting value 2.	—	○	○	○	
	SD1189	Remote output 3	Stores the analog remote output setting value 3.	—	○	○	○	
	SD1190	Remote output 4	Stores the analog remote output setting value 4.	—	○	○	○	
	SD1191	PTC thermistor resistance value	Stores the PTC thermistor resistance value.	—	○	○	○	
	SD1192	Control circuit temperature	Stores the control circuit temperature. The increment is 1°C.	—	○	○	○	
	SD1193	Cumulative pulse	The cumulative number of pulses is displayed (monitor range: -32767 to 32767) (For the vector control compatible plug-in option).	—	○	○		○
	SD1194	Cumulative pulse overflow times	The number of the cumulative pulse overflow times is displayed(monitor range: -32767 to 32767) (For the vector control compatible plug-in option).	—	○	○		○
	SD1195	Cumulative pulse (control terminal option)	The cumulative number of pulses is displayed (monitor range: -32767 to 32767) (For the vector control compatible control terminal option).	—	○	○		
	SD1196	Cumulative pulse overflow times (control terminal option)	The number of the cumulative pulse overflow times is displayed(monitor range: -32767 to 32767) (For the vector control compatible control terminal option)	—	○	○		
	SD1197	Energy saving effect	According to the parameter settings.	—	○	○	○	○
	SD1198	Cumulative energy saving		—	○	○	○	○
	SD1199	PID set point	Stores the PID set point. The increment is 0.1%.	—	○	○	○	○
	SD1200	PID measured value	Stores the PID measured value. The increment is 0.1%.	—	○	○	○	○
	SD1201	PID deviation	Stores the PID deviation. The increment is 0.1%.	—	○	○	○	○
	SD1202	Second PID set point	Stores the second PID set point. The increment is 0.1%.	—	○	○	○	
	SD1203	Second PID measured value	Stores the second PID measured value. The increment is 0.1%.	—	○	○	○	
	SD1204	Second PID deviation	Stores the second PID deviation. The increment is 0.1%.	—	○	○	○	

Device number		Name	Description	Page	Supported model			
					A800	A800 Plus	F800	E800
Special register for control	SD1205	Option input terminal status 1	Stores the input status of the FR-A8AX. All are OFF (0) when there are no options installed. 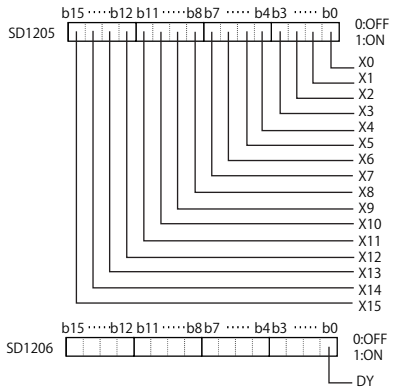 	—	○	○	○	○
	SD1206	Option input terminal status 2		—	○	○	○	○
	SD1207	Option output terminal status	Stores the output status of the FR-A8AY or FR-A8AR. All are OFF (0) when there are no options installed. 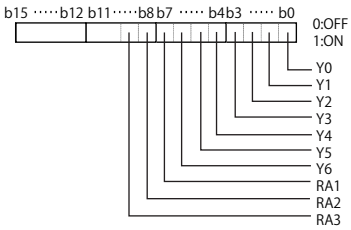 	—	○	○	○	○
	SD1208	Emergency drive status	Stores the emergency drive status number.	—			○	
		Winding diameter compensation torque command	Stores the commanded torque after winding diameter compensation.	—		○[*5]		
	SD1209	Current position 2 (lower 16 bits)	Stores the lower 16 bits of the current position 2 value.	—	○	○		
		Inertia compensation	Stores the inertia compensation torque.	—		○[*5]		
	SD1210	Current position 2 (upper 16 bits)	Stores the upper 16 bits of the current position 2 value.	—	○	○		
		Mechanical loss compensation	Stores the mechanical loss compensation.	—		○[*5]		
	SD1211	Dancer main speed setting	Stores the dancer main speed setting.[*11]	—	○	○		○
		Winding diameter compensation speed	Stores the Winding diameter compensation speed.	—		○[*5]		
	SD1212	PID manipulated amount	Stores the PID manipulated amount. The increment is 0.1%.	—	○	○	○	○
	SD1213	PID measured value 2	Stores the PID measured value. The increment is 0.1%. (Monitoring can be performed even when PID control is disabled.)	—	○	○	○	
	SD1214	User definition error	An inverter fault is initiated by setting the values of "16 to 20" in SD1214.	57	○	○	○	○
	SD1215	Monitor setting selection	Set SD1215 to display the monitor set in SD1216 to SD1218.	58	○	○	○	○
	SD1216	Monitor 1 setting value	The first to the third monitors on the operation panel can be changed by setting the value "40 to 42" in **Pr.774 to Pr.776**.	58	○	○	○	○
	SD1217	Monitor 2 setting value			○	○	○	○
	SD1218	Monitor 3 setting value			○	○	○	○
	SD1220	Motor thermal load factor	Stores the motor thermal load factor.	—	○	○	○	○
	SD1221	Inverter thermal load factor	Stores the inverter thermal load factor.	—	○	○	○	○
	SD1222	Second PID manipulated amount	Stores the second PID manipulated amount. The increment is 0.1%.	—	○	○	○	

Device number		Name	Description	Page	Supported model			
					A800	A800 Plus	F800	E800
Special register for control	SD1223	Second PID measured value 2	Stores the second PID measured value. The increment is 0.1%. (Monitoring can be performed even when PID control is disabled.)	—	○	○	○	
	SD1224	32-bit cumulative power (Lower 16 bits)	1kWh	—	○	○	○	○
	SD1225	32-bit cumulative power (Upper 16 bits)	1kWh	—	○	○	○	○
	SD1226	32-bit cumulative power (Lower 16 bits)	0.01kWh/0.1kWh *6	—	○	○	○	○
	SD1227	32-bit cumulative power (Upper 16 bits)	0.01kWh/0.1kWh *6	—	○	○	○	○
	SD1228	BACnet reception status	Stores the reception status of BACnet communication.	—			○	○
		Tension command after taper compensation	Stores the commanded tension after taper compensation.	—		○*5		
	SD1229	Trace status	Stores the trace status.	—	○	○	○	○
	SD1230	Multi-revolution counter	Stores the multi-revolution encoder counter value when the FR-A8APS is used.	—	○	○		
	SD1234	Second parameter change (RAM)	When setting a calibration parameter (bias/gain) H00: Frequency (torque) H01: Analog value set by parameters H02: Analog value input from terminals	61, 62	○	○	○	○
	SD1235	Second parameter change (EEPROM)						
	SD1236	Pulse train input sampling pulse	The number of pulses counted in count cycle is stored. (0 to 32767)	67	○	○		
	SD1237	Pulse train input cumulative count value L	The cumulative value of the number of sampling pulses is stored. (0 to 99999999)		○	○		
	SD1238	Pulse train input cumulative count value H			○	○		
	SD1239	Reset request of pulse train input count	The sampling pulses and cumulative count value are cleared. Automatically changes to "0" after reset. (1: count clear)		○	○		
	SD1240	Count start of the pulse train input	Start counting the sampling pulses and cumulative count value. (0: count stop, 1: count start)		○	○		
	SD1241	Parameter number (RAM)	Set the parameter number to read from/write to the inverter.	61, 62	○	○	○	○
	SD1242	Parameter content (RAM)	Stores the inverter parameter content (RAM value) specified by SD1241. Input the parameter setting value when writing the parameters.		○	○	○	○
	SD1243	Parameter number (EEPROM)	Set the parameter number to read from/write to the inverter.		○	○	○	○
	SD1244	Parameter content (EEPROM)	Stores the inverter parameter content (EEPROM value) specified by SD1243. Input the parameter setting value when writing the parameters.		○	○	○	○
	SD1245	Terminal 1 input	Stores the analog input value (0.1% increments) to terminal 1.	66	○	○	○	
	SD1246	Terminal 2 input	Stores the analog input value (0.1% increments) to terminal 2.		○	○	○	○
	SD1247	Terminal 4 input	Stores the analog input value (0.1% increments) to terminal 4.		○	○	○	○
	SD1248	PID control set point/ deviation	Set the PID set point or PID deviation. (0.01% increments)	68	○	○	○	○
	SD1249	PID control measured value	Set the PID measured value. (0.01% increments)		○	○	○	○
	SD1250	PID control manipulated amount	Stores the PID manipulated amount. (0.01% increments)		○	○	○	○
	SD1251	Terminal FM/CA output	When **Pr.54** = "70", analog output can be performed from the terminal FM/CA. (0.1% increments)	66	○	○	○	○
	SD1252	Terminal AM output	When **Pr.158** = "70", analog output can be performed from terminal AM. (0.1% increments)		○	○	○	○
	SD1253	AM0 output	When **Pr.306 or Pr.310** = "70", analog output can be performed from terminals AM0 and AM1 of the FR-A8AY. (0.1% increments)		○	○	○	○
	SD1254	AM1 output			○	○	○	○

Device number		Name	Description	Page	Supported model			
					A800	A800 Plus	F800	E800
Special register for control	SD1255	PID operation control	Sets the start/stop of PID operation. Set "1 (first PID action)", "2 (Second PID action)", or "3 (first and second PID action)" to start PID control.	68	○	○	○	○
	SD1300	Terminal 6 input	Stores the analog input value (0.1% increments) to terminal 6 of the FR-A8AZ.	66	○	○		
	SD1301	Terminal DA1 output	When **Pr.838** = "70", analog output can be performed from terminal DA1 of the FR-A8AZ. (0.1% increments)	66	○	○		
	SD1308	Second PID control set point/deviation	Set the second PID set point or the second PID deviation. (0.01% increments)	68	○	○	○	
	SD1309	Second PID control measured value	Set the second PID measured value. (0.01% increments)		○	○	○	
	SD1310	Second PID control manipulated amount	Stores the second PID manipulated amount. (0.01% increments)		○	○	○	
	SD1320	2-word parameter content (lower) (RAM)	Use 2-word inverter parameters to read or write using sequence programs. SD1320: Lower 1 word SD1321: Upper 1 word	61, 62	○	○	○	○
	SD1321	2-word parameter content (upper) (RAM)			○	○	○	○
	SD1322	2-word parameter content (lower) (EEPROM)	Use 2-word inverter parameters to read or write using sequence programs. SD1322: Lower 1 word SD1323: Upper 1 word		○	○	○	○
	SD1323	2-word parameter content (upper) (EEPROM)			○	○	○	○
	SD1460	Station number in inverter-to-inverter link	The station number in the inverter-to-inverter link is stored. b15 b8 b7 b0 Reserved (H00) | Station No. Value / Station No. H00 Master H01 Slave 1 H02 Slave 2 H03 Slave 3 H04 Slave 4 H05 Slave 5 HFF Function disabled	—	○	○	○	○
	SD1461	Communication status of inverter-to-inverter link	The communication status of the slaves in the inverter-to-inverter link is stored. (In the slave inverter, only its own communication status is indicated.) b15 b5 b4 b0 Bit / Target station / Description 0 Slave 1 — 0: The link is not established. 1 Slave 2 — 1: The link is established. 2 Slave 3 3 Slave 4 4 Slave 5	—	○	○	○	○

*1 Always "MAIN". After "MAIN", four space (20H) characters are stored.
*2 Always set to the STF signal in the Network operation mode. Changing the function with **Pr.178** is disabled.
*3 Always set to the STR signal in the Network operation mode. Changing the function with **Pr.179** is disabled.
*4 The **Pr.811** setting is available only for the FR-A800 series and FR-A800 Plus series.
*5 Monitoring is available only for the FR-A800-R2R series.
*6 Settings differ according to the inverter capacity.
*7 Setting is available for the FR-A800 series, FR-A800 Plus series, and FR-F800 series.
*8 **Pr.430** is used to switch between the value before the electronic gear operation (**Pr.430** = less than "1000" or "9999") and the value after the electronic gear operation (**Pr.430** = "1000" or more or "8888").
*9 Monitoring is available when the data type is unsigned bit string (16-bit) word.
*10 Monitoring negative values is available when the data type is signed doubleword.
*11 The value can be set in frequency (0.01 Hz increments), in rotations per minute (1 r/min increments), and in machine speed (1 increments) according to the **Pr.53** setting value.

1.9.8 Special register (master)

Device No.	Name	Description
SD1470 to SD1477	Inverter-to-inverter link receive data 1 to 8 (slave 1)	Data 1 to 8 received from slave 1
SD1478 to SD1485	Inverter-to-inverter link send data 1 to 8 (slave 1)	Data 1 to 8 sent to slave 1
SD1486 to SD1493	Inverter-to-inverter link receive data 1 to 8 (slave 2)	Data 1 to 8 received from slave 2
SD1494 to SD1501	Inverter-to-inverter link send data 1 to 8 (slave 2)	Data 1 to 8 sent to slave 2
SD1502 to SD1509	Inverter-to-inverter link receive data 1 to 8 (slave 3)	Data 1 to 8 received from slave 3
SD1510 to SD1517	Inverter-to-inverter link send data 1 to 8 (slave 3)	Data 1 to 8 sent to slave 3
SD1518 to SD1525	Inverter-to-inverter link receive data 1 to 8 (slave 4)	Data 1 to 8 received from slave 4
SD1526 to SD1533	Inverter-to-inverter link send data 1 to 8 (slave 4)	Data 1 to 8 sent to slave 4
SD1534 to SD1541	Inverter-to-inverter link receive data 1 to 8 (slave 5)	Data 1 to 8 received from slave 5
SD1542 to SD1549	Inverter-to-inverter link send data 1 to 8 (slave 5)	Data 1 to 8 sent to slave 5

1.9.9 Special register (slave)

Device No.	Name	Description
SD1470 to SD1477	Inverter-to-inverter link receive data 1 to 8 (master)	Receive data 1 to 8 from master
SD1478 to SD1485	Inverter-to-inverter link send data 1 to 8 (master)	Send data 1 to 8 to master
SD1486 to SD1549	For manufacturer setting. Do not set.	

1.10 Special registers to monitor and control inverter status

Read from and write to user sequences are possible by assigning the data to monitor and change the operating status of the inverter from SD1133 to SD1147. (For the list of registers, refer to page 31.)

1.10.1 Always readable data

The following data is always readable. They are refreshed on every END instruction automatically.

◆ Operation monitor

These are the data devices by which the output frequency, output current, and output voltage of the inverter can be monitored, and which are always readable (write is disabled). Pay attention to the setting increments.

Device number	Name	Setting increments	Data example	Data access condition
SD1133	Output frequency monitor	0.01Hz	Device content 6000→60.00 Hz	Always accessible
SD1134	Output current monitor	0.01A	Device content 200→2.00 A	
SD1135	Output voltage monitor	0.01V	Device content 1000→10.0 V	

NOTE

- Setting frequency can be set in increments of 0.01 Hz, but operates at 0.1 Hz increments in actual operation.

◆ Fault history (error code and error definition)

When the inverter fails, it stores error codes.

A maximum of eight faults are stored with error codes in the order shown below, and they are always readable (write is disabled).

<Error code storing method details>

	b15 to b8	b7 to b0
SD1136	Fault record 2	Fault record 1
SD1137	Fault record 4	Fault record 3
SD1138	Fault record 6	Fault record 5
SD1139	Fault record 8	Fault record 7

Newer

Older

For the details of the error codes (data codes) and their definition, refer to the Instruction Manual of the inverter.

<Program example for reading a fault record>

The following description is of a program that reads out the latest fault record of the inverter and stores to D0.

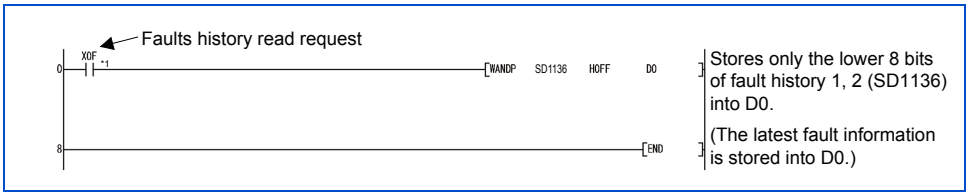

*1 Assign an input device to X0F according to the system requirement.

◆ Fault clear signal (X51 signal)

When an inverter fault occurs, X51 signal clears the fault without resetting the inverter.
By using the X51 signal, the inverter fault can be cleared with the PLC function still operating.
Set "51" in **Pr.178 to Pr.189 (Input terminal function selection)** in advance to enable the X51 signal.

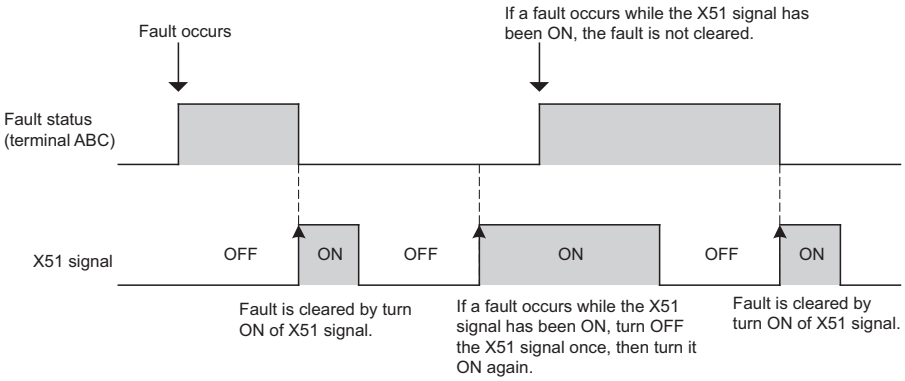

- The fault clear function using the X51 signal does not function while the retry function is operating (including during the retry waiting time). (The X51 signal operates when the retry count is exceeded (E.RET).
- When the fault is cleared, start commands from PU and communication are also cleared. (All commands except the start command from communication are maintained in the status before the fault is cleared.)

NOTE

- E.CPU, E.P24, E.CTE, E.1 to E.3, E.5 to E.7, E.13, E.16 to E.20, E.SAF, E.PE2, and E.PE6 are not cleared by the X51 signal. When several faults have occurred and at least one of them cannot be cleared, it is not cleared by the X51 signal.
- When a fault is cleared, the accumulated heat values of the electronic thermal O/L relay and regenerative brake are not cleared. Faults including E.THM, E.THT, and E.BE may occur again.
- The inverter remains in the stop status immediately after a fault is cleared. However, the inverter starts operating again after the fault is cleared if the start command is ON.
- When an error occurs, the normal reset function operates when the STOP/RESET key on the operation panel or parameter unit is pushed. Be careful not to push the key by mistake.
- During position control, note that clearing a fault may cause a stop position fault as position control operation will be restarted by the command input at the place where the fault is cleared.
- Changing terminal assignment by using **Pr.178 to Pr.189 (input terminal function selection)** may affect the other functions. Set parameters after confirming the function of each terminal.

◆ Self-diagnostic error, error number and details

When an operation error occurs during execution of sequence programs, the following error numbers are stored in SD0.
When a self-diagnostic error occurs, the "P.RUN" indicator (LED) blinks.

Error No.	Error name	Details
1010	END NOT EXECUTE	END command was not executed.
2200	MISSING PARA.	No parameter file.
2503	CAN'T EXE.PRG	No program file exists.
3000	PARAMETER ERR	The content of the parameter indicated by the individual error information (SD16) is incorrect.
3003	PARAMETER ERR	The number of device points set in the PLC parameter device setting is not within the usable range.
4000	INSTRCT.CODE ERR	An undecodable instruction code is included in the program. An unusable instruction is included in the program.
4010	MISSING END INS.	No END (FEND) instruction in the program.
4021*1	CAN'T SET(P)	The same pointer number is assigned to multiple common/local pointers used in each file.
4100	OPERATION ERROR	Data that cannot be used in instructions is included.
4101*1	OPERATION ERROR	The number of data used in the instruction is set to exceed the available range. The data or constants stored in the device specified by the instruction exceed the available range. For writing to the host CPU shared memory, the write inhibited area is specified as the write destination address. The ranges of the stored data of the devices specified by the instruction are overlapping. The device specified by the instruction exceeds the range for the number of device points. The interrupt pointer number specified by the instruction exceeds the available range.
4210*1	CAN'T EXECUTE(P)	The specified pointer number does not exist before the END instruction. The pointer number that is not used as a label in the same program is specified. The END instruction does not exist.
5001	WDT ERROR	The program scan time exceeded the watchdog timer value set in the PLC RAS setting of the PLC parameter.
5010	PRG.TIME OVER	The program scan time exceeded the constant scan time set in the PLC RAS setting of the PLC parameter.

*1 Supported by the FR-E800 series only.

NOTE

- Operation at error stop

Output (Y) is cleared.
Other devices remain in the status before the error stop occurred.
To clear the statuses, turn OFF or reset (turn RES signal ON (0.1 s) and then OFF) the inverter.

1.10.2 Data read by controlling read command (from OFF to ON)

The operation mode and set frequency of the inverter can be read.

Device number	Name	Read instruction	Read completion	Data access condition
SD1140	Operation mode setting read	Y20	X20	Always accessible
SD1141	Set frequency read (RAM)	Y21	X21	
SD1142	Set frequency read (EEPROM)	Y22	X22	

For the data devices above, data is stored when the read command switches from OFF to ON and read completion switches from OFF to ON.
Data is not refreshed while the read command is ON. (Data is not updated.)
Data is refreshed by turning the read command OFF and ON again.

- Timing diagram of a data read

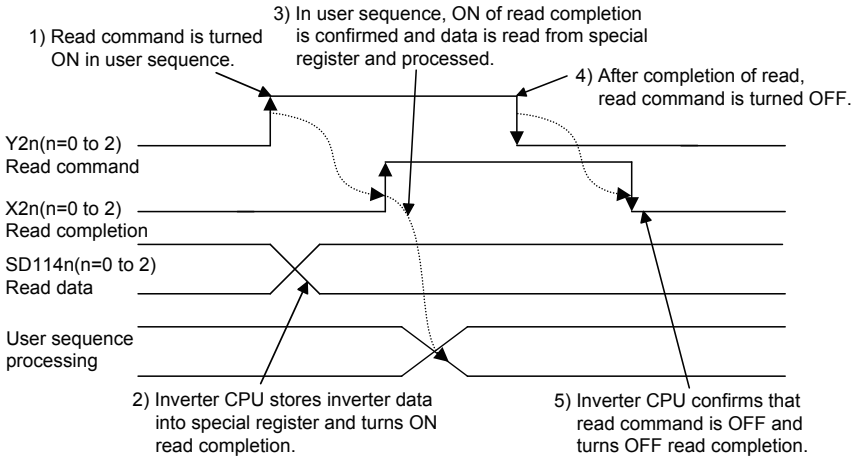
1) Read command is turned ON in user sequence.
3) In user sequence, ON of read completion is confirmed and data is read from special register and processed.
4) After completion of read, read command is turned OFF.
Y2n(n=0 to 2)
Read command
X2n(n=0 to 2)
Read completion
SD114n(n=0 to 2)
Read data
User sequence
processing
2) Inverter CPU stores inverter data into special register and turns ON read completion.
5) Inverter CPU confirms that read command is OFF and turns OFF read completion.

◆ Operation mode setting read (SD1140)

Data content	Operation mode
H0000	NET operation mode
H0001	External operation mode
H0002	PU operation mode

NOTE

- When **Pr.79 Operation mode selection** = "0", the setting is applied. However, if **Pr.79** = "3 or 4", "H0002" (PU operation mode) is applied.

<Program example of reading operation mode settings>

The following description is of a program that reads out the operation mode data to D0.

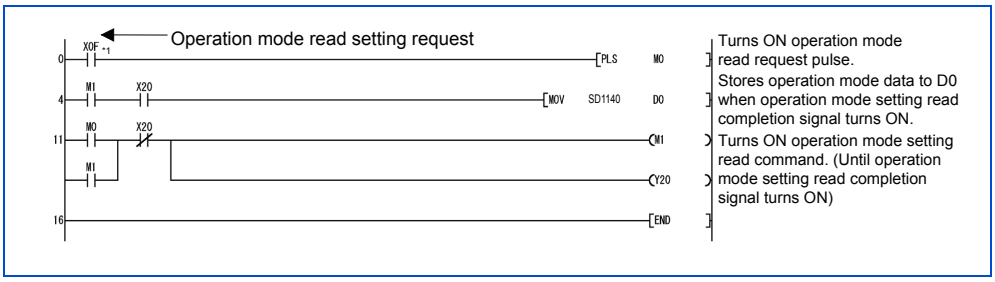

*1 Assign an input device to X0F according to the system requirement.

◆ Set frequency read (RAM) (SD1141)

The frequency set in RAM can be read out from SD1141. Its increment is 0.01 Hz.

(For example, "6000" means 60.00 Hz.)

If the rotation rate is set, the increment is 1 r/min or 0.1 r/min according to the setting value of **Pr.811**. (FR-A800 series and FR-A800 Plus series only)

<Program example of reading the set frequency (RAM)>

The following description is of a program that reads out the set frequency (RAM) to D0.

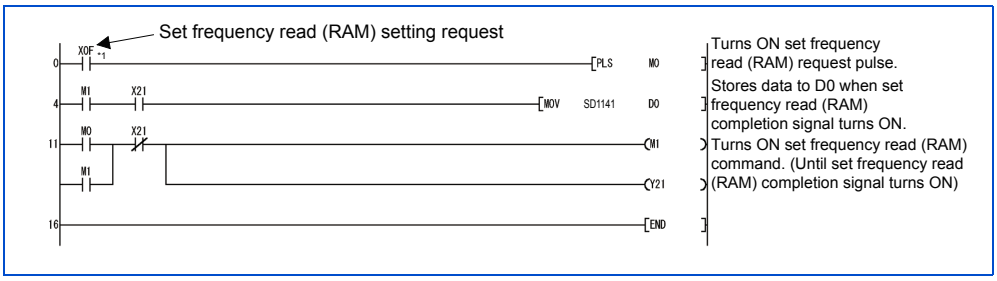

*1 Assign an input device to X0F according to the system requirement.

NOTE

- The frequency to be read is not the command value of an external signal.

◆ Set frequency read (EEPROM) (SD1142)

The frequency set in EEPROM can be read from SD1142. Its increment is 0.01 Hz.
(For example, "6000" means 60.00 Hz.)
If the rotation rate is set, the increment is 1 r/min or 0.1 r/min according to the setting value of **Pr.811**. (FR-A800 series and FR-A800 Plus series only)

<Program example of reading the set frequency (EEPROM)>
The following description is of a program that reads out the set frequency (EEPROM) to D0.

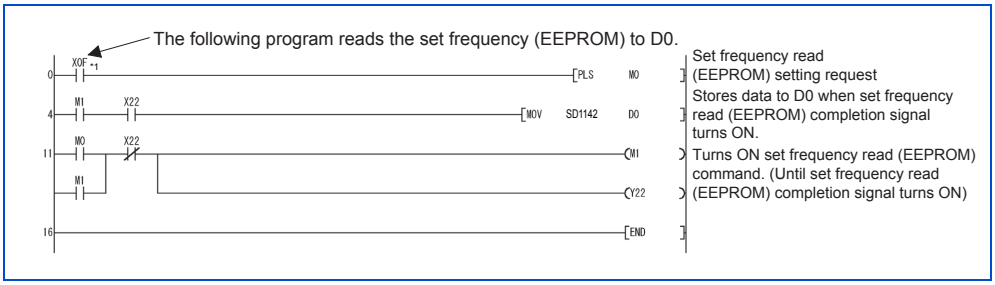

*1 Assign an input device to X0F according to the system requirement.

NOTE

- The frequency to be read is not the command value of an external signal.

1.10.3 Data writing method by controlling write command (from OFF to ON)

Writing of an operation mode and setting frequency to the inverter, a batch clear of fault records, and all parameter clear can be executed.

Device number	Name	Write instruction	Write completion	Data access condition
SD1143	Writing the operation mode setting	Y23	X23	**Pr.79** = 0, 2
SD1144	Writing the setting frequency (RAM)	Y24	X24	PU operation mode or NET operation mode
SD1145	Writing the setting frequency (EEPROM)	Y25	X25	
SD1146	Batch clearing of fault records	Y26	X26	Always accessible
SD1147	All parameter clear	Y27	X27	According to the setting of **Pr.77**

The data above is written at the point when write completion turns ON after the write command turns from OFF to ON.
(Written at clear completion of SD1146 executed for fault record batch clear and SD1147 for all parameter clear.)
To write again, the write command must be turned OFF and then ON again.

- Timing diagram of a data write

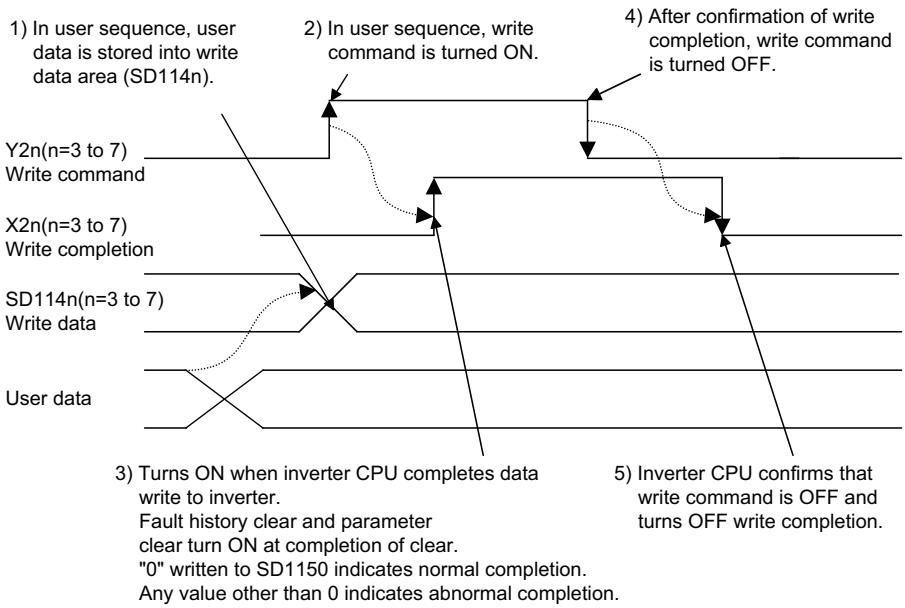

◆ Writing operation mode settings (SD1143)

Data content:

Data content	Operation mode
H0000	NET operation mode
H0001	External operation mode
H0002	PU operation mode

The method for changing operation modes is shown in the following chart when **Pr.79 Operation mode selection** = "0".

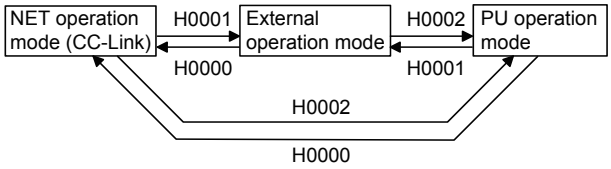

When **Pr.79 = "2", the chart is as follows.**

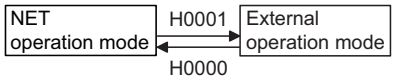

NOTE

- When **Pr.79** ≠ "0", the mode is fixed.

There are no limiting conditions by the command source for operation mode transitions. However, the operation mode may not be able to be changed depending on the settings of parameters (**Pr.79**, **Pr.340**, etc.).
When the operation mode settings are completed normally, write completion signal (X23) turns ON at the same time as SD1150 is set to "0".
Writing any setting value other than H0000 to H0002 or executing writing while the inverter is operating causes the write completion signal (X23) to turn ON at the same time as setting HFFFF in SD1150, resulting in error completion.
If an error completion occurs, the operation mode is not changed.

<Program example of writing operation mode settings>
The following description is of the program that changes the operation mode to NET operation mode.

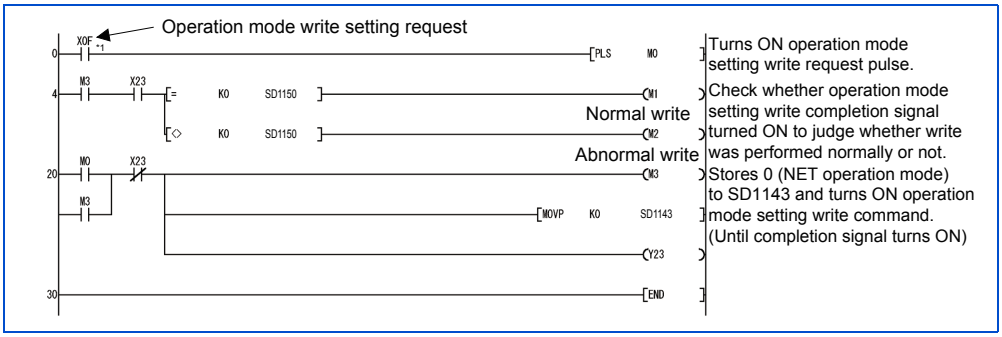

*1 Assign an input device to X0F according to the system requirement.

◆ Setting frequency write (RAM) (SD1144)

The content of SD1144 is written to the RAM as setting frequency. Its increment is 0.01 Hz.
(For example, 60.00 Hz is written as "6000".)
If the rotation rate is set, the increment is 1 r/min or 0.1 r/min according to the setting value of **Pr.811**. (FR-A800 series and FR-A800 Plus series only)
The frequency can be set within the range of 0 to 59000 (0 to 590.00 Hz).
When frequency settings are written normally, the write completion signal (X24) turns ON at the same time as SD1150 is set to "0".
Executing writing with any value that is outside the specified range causes the write completion signal (X24) to turn ON at the same time as setting HFFFF in SD1150, resulting in error completion. If an error completion occurs, the setting frequency is not changed.

Point

- This can be set in PU operation mode and NET operation mode. Refer to the Instruction Manual of the inverter.

<Program example of writing the setting frequency (RAM)>
The following description is of a program that changes the setting frequency (RAM) to 30 Hz.

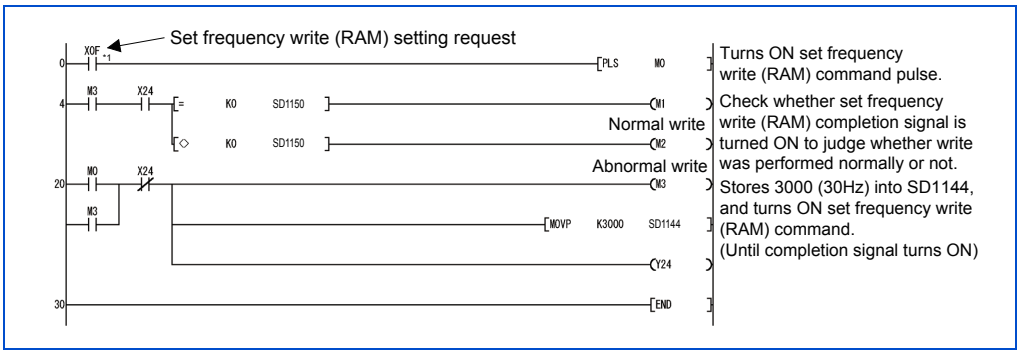

*1 Assign an input device to X0F according to the system requirement.

◆ Setting frequency write (EEPROM) (SD1145)

The content of SD1145 is written to EEPROM as setting frequency. Its increment is 0.01 Hz.
(For example, 60.00 Hz is written as "6000".)
If the rotation rate is set, the increment is 1 r/min or 0.1 r/min according to the setting value of **Pr.811**. (FR-A800 series and FR-A800 Plus series only)
The frequency can be set within the range of 0 to 59000 (0 to 590.00 Hz).
When frequency settings are written normally, the write completion signal (X25) turns ON at the same time as SD1150 is set to "0".
Executing writing with any value that is outside the specified range causes the write completion signal (X25) to turn ON at the same time as setting HFFFF in SD1150, resulting in error completion. If an error completion occurs, the setting frequency is not changed.

Point

- This can be set in PU operation mode and NET operation mode. Refer to the Instruction Manual of the inverter.

<Program example of writing setting frequency (EEPROM)>
The following description is of a program that changes the setting frequency (EEPROM) to 10 Hz.

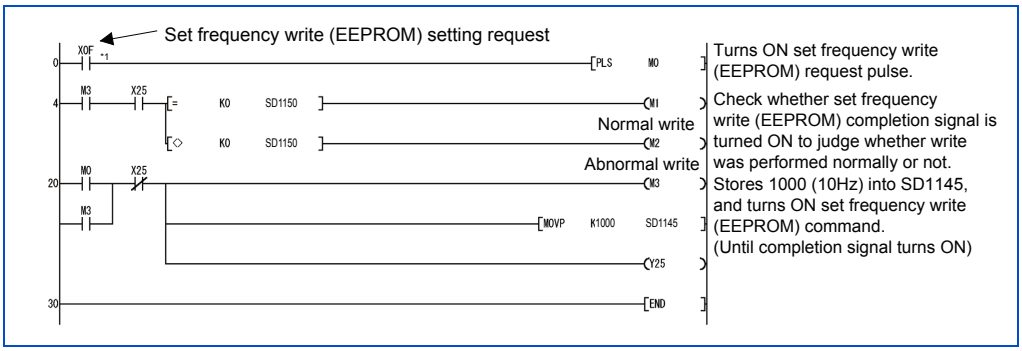

*1 Assign an input device to X0F according to the system requirement.

NOTE

- When set frequencies need to be changed often, use the device SD1144 "set frequency (RAM)". There is a limitation on the number of times EEPROM can be written to. (Approximately 100,000 times)

◆ Batch clear of fault records (SD1146)

When H9696 is written to SD1146, fault records are cleared in a batch.
When clearing is completed, the write completion signal (X26) turns ON at the same time as SD1150 is set to "0".
Executing writing with any value that is outside the specified range or writing while the inverter is running causes the write completion signal (X26) to turn ON at the same time as setting HFFFF in SD1150, resulting in error completion. In the case of error completion, the fault records are not cleared.

<Program example of batch clearing of fault records>
The following description is of the program that batch clears fault records.

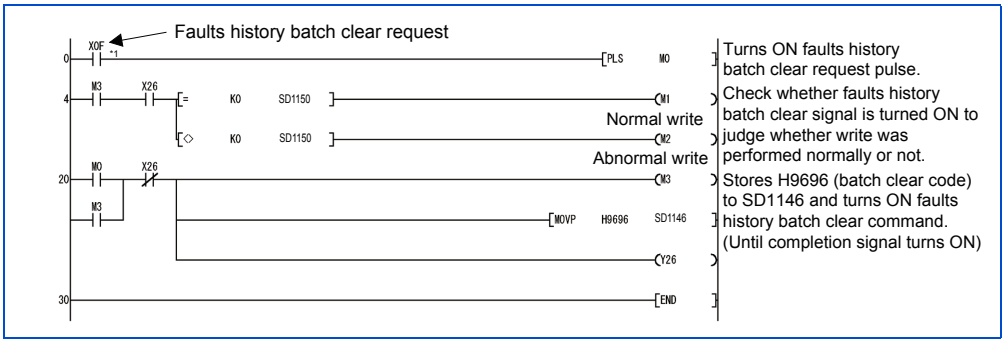

*1 Assign an input device to X0F according to the system requirement.

◆ Parameter clear (SD1147)

When H9696 or H9966 is written to SD1147, all parameters are cleared. When H5A5A or H55AA is written to SD1147, parameters except the communication parameters are cleared. (Refer to the Instruction Manual of the inverter.)

Device No.	Setting value	Communication parameters	Other parameters	Details
SD1147	H9696	○	○	Parameter clear.
	H9966	○	○	All parameter clear.
	H5A5A	×	○	Parameter clear except for communication parameters.
	H55AA	×	○	All parameter clear except for communication parameters.

When clearing is complete, the write completion signal (X27) turns ON at the same time as SD1150 is set to "0".
Executing writing with any value that is outside the specified range or writing while the inverter is running causes the write completion signal (X27) to turn ON at the same time as setting HFFFF in SD1150, resulting in error completion. In the case of an error completion, the parameters are not cleared.

NOTE

- For the parameters that are cleared by Parameter clear or All parameter clear, refer to the Instruction Manual (Detailed) of the inverter and the FR-E800 Instruction Manual (Function).

Point

- This can be set in the PU operation mode and NET operation mode. Refer to the Instruction Manual (Detailed) of the inverter and the FR-E800 Instruction Manual (Function).

<Program example of clearing all parameters>

The following description is of the program that clears all parameters.

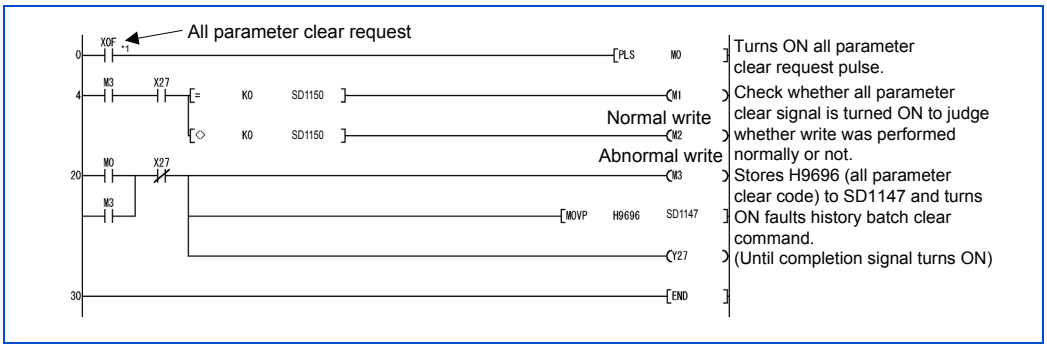

*1 Assign an input device to X0F according to the system requirement.

NOTE

- While communicating with FR Configurator2, clear the parameters using H5A5A or H55AA.

Related device

Device SD1150: inverter parameter access error (refer to page 57)

1.10.4 Inverter operating status control

Device number	Name	Data access condition
SD1148	Inverter operating status control	Always accessible. However, this is only active in External/NET operation mode. (Disabled in PU operation mode)
SD1149	Inverter operating status control enable/disable	

◆ Inverter operating status control (SD1148)

SD1148 is a device for controlling the operating status of the inverter. The inverter operation can be controlled by turning the bits b0 to b11 of SD1148 ON/OFF (1,0). All initial values are "0".

Ex.

When SD1148 is set to "5", the bits b0 and b2 are turned to 1 (ON) and thus STF and RH are turned ON, creating the fast forward rotation command.

For FR-A800/FR-A800 Plus/FR-F800 series

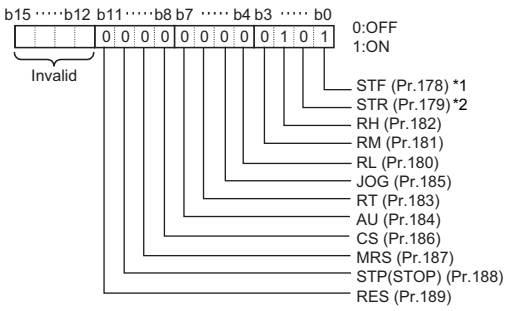

For FR-E800 series

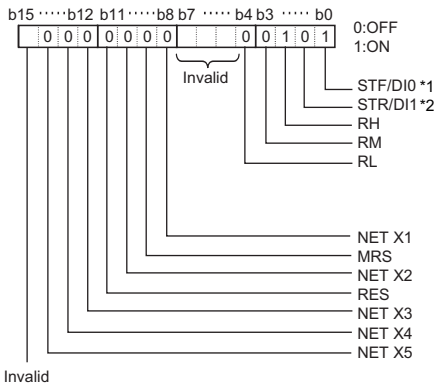

*1 Always set to the STF signal in the Network operation mode. Changing the function with **Pr.178** is disabled.

*2 Always set to the STR signal in the Network operation mode. Changing the function with **Pr.179** is disabled.

NOTE

- The functions of SD1148 bits are assigned by **Pr.178 to Pr.189** in the same way as for the external input terminal. Note that SQ signal (setting value: 50) cannot be assigned.
- Turn ON SM1255 (special register selection) before using SD1148. (Refer to page 28.)

◆ Inverter operating status control enable/disable setting (SD1149)

The inverter operating status control by SD1148 and SM1200 to SM1211 can be enabled/disabled. Control of the bits of SD1148 and SM1200 to SM1211 are enabled by turning the corresponding bits b0 to b11 of SD1149 ON/OFF (1, 0). All initial values are "0".

When SD1149 is set to HFFF, the bits b0 to b11 change to 1 (ON) disabling all inputs through external terminals, thus enabling operation control by the inverter operation control (SD1148) and inverter operating status control flag (SM1200 to SM1211).

For FR-A800/FR-A800 Plus/FR-F800 series

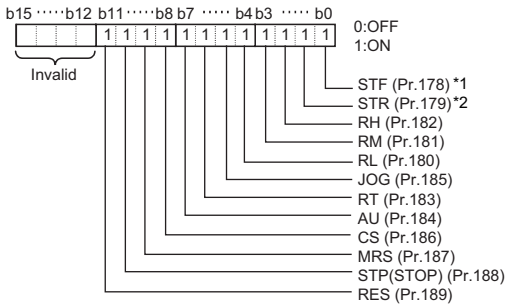

For FR-E800 series

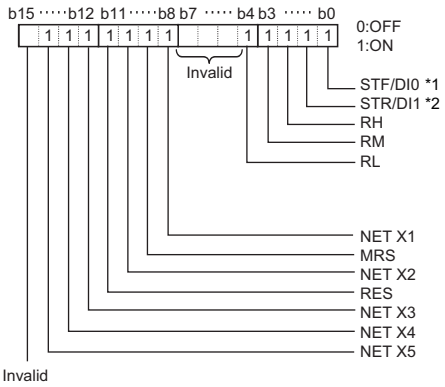

*1 Always set to the STF signal in the Network operation mode. Changing the function with **Pr.178** is disabled.

*2 Always set to the STF signal in the Network operation mode. Changing the function with **Pr.179** is disabled.

NOTE

- When SD1148 and SM1200 to SM1211 are enabled by SD1149, control by external terminal input or CC-Link remote input are disabled for the bits that are enabled. (Same as setting **Pr.178 to Pr.189** to "no function".)
- When terminals are enabled by PLC function, the control through external terminals is disabled.
- Input through external terminals is always enabled for SQ signal. (Control of SQ signal cannot be performed from each SD1149 bit.)

<Program example of operation command settings>

Program example of operating the inverter in fast forward rotation.

*1 Assign an input device to X0F according to the system requirement.

*2 Turn ON SM1255 (special register selection) before using SD1148. (Refer to page 28.)

1.10.5 Inverter parameter access error (SD1150)

Device number	Name	Data access condition
SD1150	Inverter parameter access error	Always accessible

When an out-of-range setting value is written to a parameter or an out-of-range frequency is set using sequence programs, or when writing is attempted while writing is disabled, a write error occurs and an error code is stored in SD1150.

<Parameters>
Parameter number + H8000 is stored to SD1150.

Ex.
If an error occurs when **Pr.0 Torque boost** is written, H8000 (H0 + H8000) is stored to SD1150.
If an error occurs when **Pr.10 DC injection brake operation frequency** is written, H800A is stored to SD1150.

<Operation mode, setting frequency, batch clear of fault records, and all parameter clear>
HFFFF is stored to SD1150. (The initial values is "0".)

Point

- The error code stored after the error occurrence will be cleared by writing "0" in SD1150. (The error code is retained until "0" is written in SD1150.)

1.10.6 Inverter status (SD1151)

Device number	Name	Data access condition
SD1151	Inverter status	Always accessible

Operating status of the inverter is stored.
Each bit is set according to the status of the inverter.

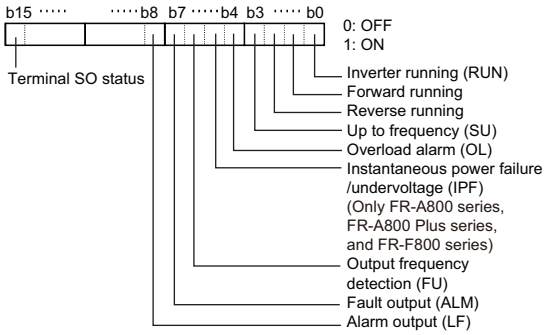

1.10.7 User-defined error (SD1214)

By setting the values "16 to 20" in SD1214, alarms for the inverter can be created. When an alarm occurs, the inverter stops.
Values other than "16 to 20" are invalid. Furthermore, this function is disabled when **Pr.414** = "0".
The created alarms are recognized as E.16 to E.20 by the inverter.

1.10.8 Monitor setting selection (SD1215 to SD1218)

The content of SD1216 to SD1218 can be displayed on the operation panel or the parameter unit.

Use SD1215 to set the decimal point display for displaying the content of SD1216 to SD1218 on the operation panel or the parameter unit.

To display the content of SD1216 to SD1218 on the operation panel or the parameter unit, set "40 to 42" in **Pr.774 to Pr.776**.

Device	Monitor description	Pr.774 to Pr.776 setting
SD1216	User monitor 1	40
SD1217	User monitor 2	41
SD1218	User monitor 3	42

To display the monitors set in SD1216 to SD1218 to decimal places, set SD1215 as follows.

<Setting of SD1215>

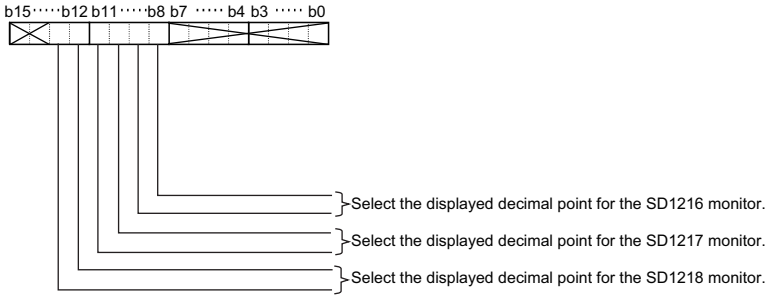

*1 Ignore bits other than those above.

<Decimal point display setting>

bn+1	bn	Increment
0	0	1 increment (no decimals)
0	1	0.1 increment
1	0	0.01 increment
1	1	0.001 increment

Setting example:

1.To display SD1216 without decimals

- Set H0000 in SD1215.
- Set "40" in **Pr.774**.

2.To display SD1216 in 0.1 increment, and SD1218 in 0.001 increment.

- Set H3100 in SD1215.
- Set "40" in **Pr.774** and "42" in **Pr.776**.

NOTE

- For monitoring SD1216 to SD1218 on the LCD operation panel or the parameter unit, the monitor names and units can be set in SD1216 to SD1218 by using G.PRR, GP.PRR, or UMSG instruction (refer to page 218).
- For details on **Pr.774 to Pr.776**, refer to the Instruction Manual (Detailed) of the inverter and the FR-E800 Instruction Manual (Function).

1.10.9 Inverter-to-inverter link function

The inverter-to-inverter link function enables communication between multiple inverters connected by Ethernet in a small-scale system by using the I/O devices and special registers of the PLC function. (Only FR-A800-E, FR-F800-E, and FR-E800-E)
For the parameters of the inverter-to-inverter link function, refer to the Ethernet Function Manual or FR-E800 Instruction Manual (Communication).

◆ I/O device

The relationship between the I/O device of the master station and the I/O device of the slave station is as follows.

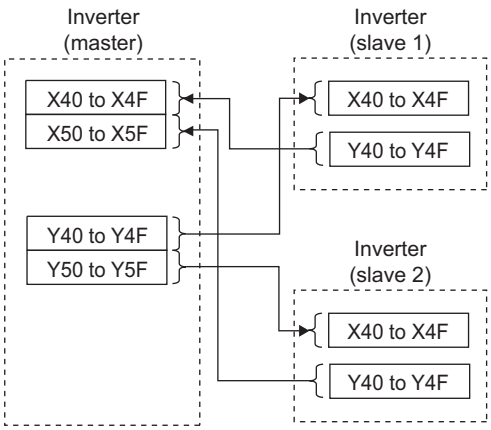

◆ Special register

The relationship between the special register of the master station and the special register of the slave station is as follows.

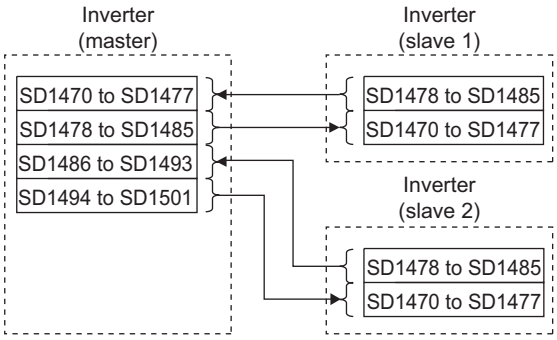

- Master-to-slave signal timing diagram

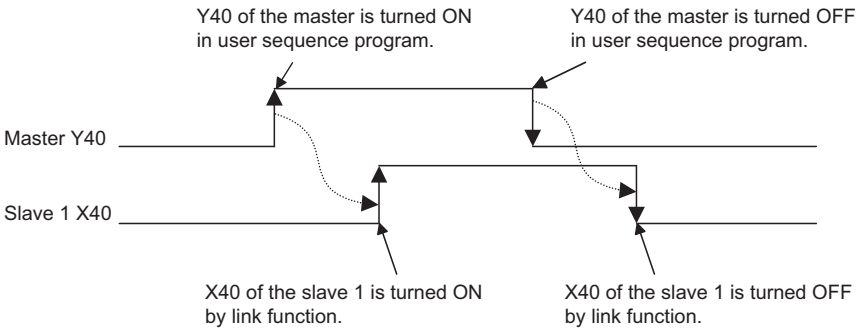

<Program example of inverter-to-inverter link function>

The following shows a program example to establish a link between the external terminal of the master and the inverter operating status control flag of the slave 1.

"242 (positive logic)" is set in **Pr.313** to use the Inverter-to-inverter linkup (LINK) signal.

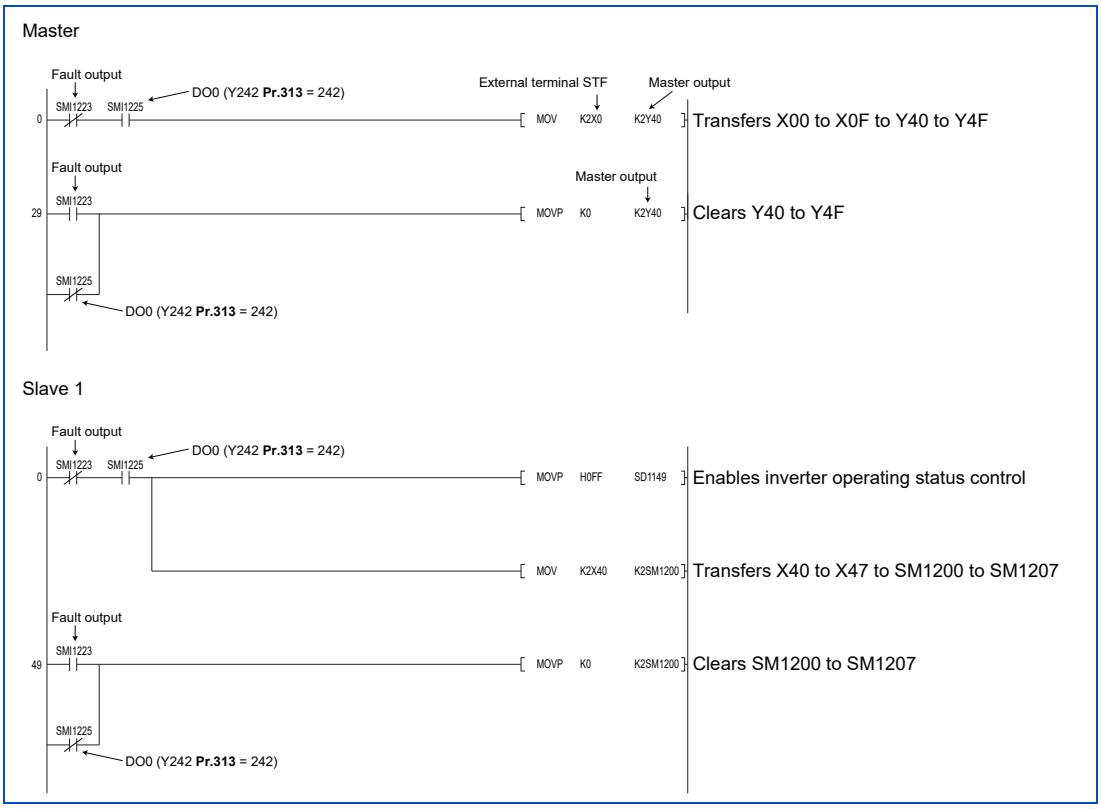

The following shows the relationship between the devices of the master and the devices of the slave 1 in the program example.

Master			Slave 1
External terminal	Inverter-to-inverter link output	Inverter-to-inverter link input	Inverter operating status control flag
X00(STF)	Y40	X40	SM1200(STF)
X01(STR)	Y41	X41	SM1201(STR)
X02(RH)	Y42	X42	SM1202(RH)
to	to	to	to
X07(AU)	Y47	X47	SM1207(AU)

NOTE

- In the program example above, the inverter-to-inverter link output and the inverter operating status control flag are cleared when a fault occurs in the inverter or communication between the master and the slave 1 cannot be established. Set the operation at occurrence of a communication error as required. (For details, refer to the Ethernet Function Manual or FR-E800 Instruction Manual (Communication).)
- Since H00FF is set in SD1149 of the slave, the control input through the external terminals (STF, STR, RH, RM, RL, JOG, RT, and AU) is disabled.
- Data communication is disabled if an inverter using multicast transmissions is set as the master among inverters using multicast transmissions and inverters using broadcast transmissions in a system. To enable communications between them, the inverter using broadcast transmissions must be set as the master.

1.11 Read/Write method of inverter parameters

1.11.1 Reading inverter parameters

Device number.	Name	Command	Completion	Data access condition (Operation mode)
SD1241	Parameter number (RAM)	Y28	X28	Always allowed
SD1242	Parameter content (RAM)			
SD1234	Second parameter change (RAM)			
SD1320	2-word parameter content (lower) (RAM)			
SD1321	2-word parameter content (upper) (RAM)			
SD1243	Parameter number (EEPROM)	Y2A	X2A	
SD1244	Parameter content (EEPROM)			
SD1235	Second parameter change (EEPROM)			
SD1322	2-word parameter content (lower) (EEPROM)			
SD1323	2-word parameter content (upper) (EEPROM)			

To read a parameter, store the parameter number in SD1241 (SD1243) and turn ON Y28 (Y2A). The parameter content will be stored in SD1242 (SD1244). After the reading is complete, X28 (X2A) turns ON to notify of the completion. For the 2-word parameter content, the inverter stores the content in SD1320 and SD1321 (SD1322 and SD1323), and SM1256 turns ON. (Use the device numbers in parentheses to read a parameter setting value from EEPROM.)
When reading a calibration parameter (Pr.902 to Pr.935), set a value listed below in SD1234 (SD1235) to read each calibration value.
0: Setting value (frequency)
1: Analog value by parameter setting
2: Analog value input from terminal
If an access error such as non-existent parameter occurs, the value of the specified parameter number plus 8000H is stored in SD1150. (Refer to page 57.)

- Inverter parameter data read timing diagram

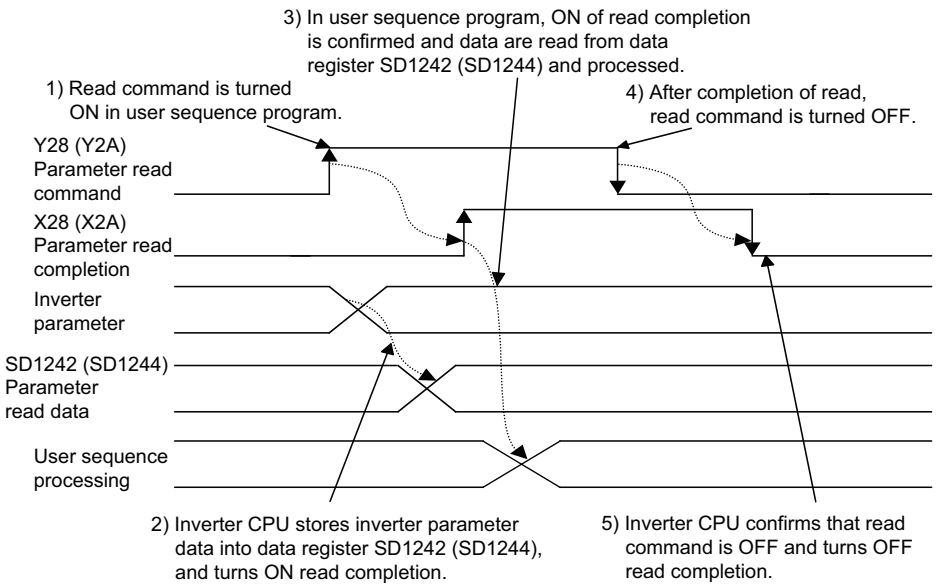

1.11.2 Writing inverter parameters

Device number	Name	Command	Completion	Data access condition (Operation mode)
SD1241	Parameter number (RAM)	Y29	X29	PU or NET operation mode (depending on **Pr.77**)
SD1242	Parameter content (RAM)			
SD1234	Second parameter change (RAM)			
SD1320	2-word parameter content (lower) (RAM)			
SD1321	2-word parameter content (upper) (RAM)			
SD1243	Parameter number (EEPROM)	Y2B	X2B	
SD1244	Parameter content (EEPROM)			
SD1235	Second parameter change (EEPROM)			
SD1322	2-word parameter content (lower) (EEPROM)			
SD1323	2-word parameter content (upper) (EEPROM)			

To write to a parameter, store the parameter number in SD1241 (SD1243) and the value to be written in SD1242 (SD1244), and turn ON Y29 (Y2B) to execute writing. After the writing completes, X29 (X2B) turns ON to notify of the completion. For the 2-word parameter content, store the value to be written in SD1320 and SD1321 (SD1322 and SD1323), and turn Y29 (Y2B) ON after turning SM1257 ON. (Use the device numbers in parentheses to write a parameter setting value to EEPROM.) For details on the 2-word parameters, refer to the Instruction Manual of the inverter.
When writing to a calibration parameter (**Pr.902 to Pr.935**), set a value listed below in SD1234 (SD1235) to write each calibration value.

0: Setting value (frequency)
1: Analog value by parameter setting
2: Analog value input from terminal

When the inverter parameter write completion signal (X29 (RAM) or X2B (EEPROM)) turns ON with normal completion, SD1150 is set to 0.
If an error in access to a parameter such as setting an out-of-range value and writing during inverter operation occurs, the write completion signal (X29 (RAM) or X2B (EEPROM)) turns ON and the value of the parameter number plus H8000 is set in SD1150 as soon as the write completion signal (X29 (RAM) or X2B (EEPROM)) is turned ON, resulting in error completion. When an error completion occurs, the parameter is not written. (For example, if an error occurs in **Pr.0 Torque boost**, H8000 is written to SD1150.)
For details on whether inverter parameter writing is allowed, refer to **Pr.77 Parameter write selection**.

Point

- Inverter parameter writing must be performed in PU operation mode or NET operation mode. (Refer to the Instruction Manual of the inverter.)
- Write 65520 (HFFF0) for the parameter value "8888", and 65535 (HFFFF) for "9999."

- Inverter parameter data write timing diagram

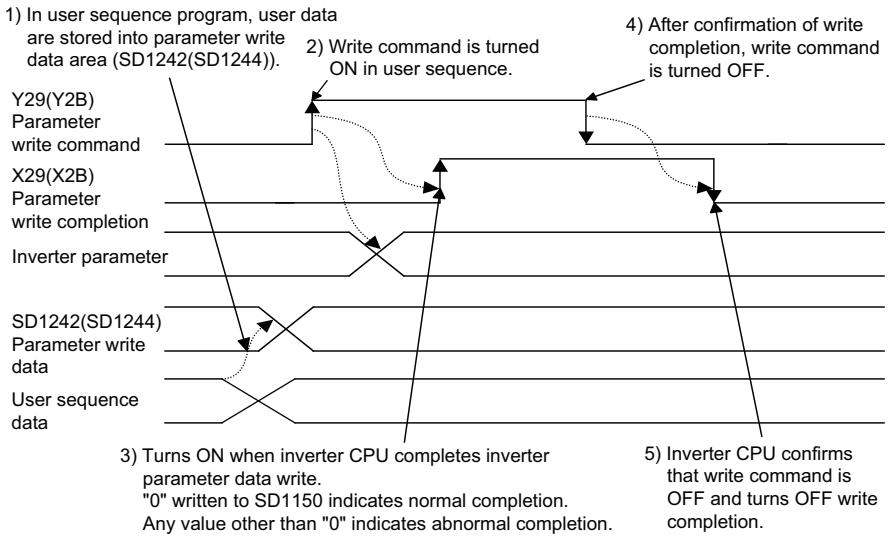
1) In user sequence program, user data are stored into parameter write data area (SD1242(SD1244)).
2) Write command is turned ON in user sequence.
4) After confirmation of write completion, write command is turned OFF.
Y29(Y2B) Parameter write command
X29(X2B) Parameter write completion
Inverter parameter
SD1242(SD1244) Parameter write data
User sequence data
3) Turns ON when inverter CPU completes inverter parameter data write. "0" written to SD1150 indicates normal completion. Any value other than "0" indicates abnormal completion.
5) Inverter CPU confirms that write command is OFF and turns OFF write completion.

1.12 User area reading/writing

Inverter parameters **Pr.1150 to Pr.1199** can be used as user parameters.

Since this parameter area and the devices D206 to D255 used in PLC function are accessible to each other, values set in **Pr.1150 to Pr.1199** are available in sequence programs. In addition, operation results in sequence programs can be monitored with **Pr.1150 to Pr.1199**.

Device number	Parameter number	Name	Command	Completion	Data access
D206 to D255	**Pr.1150 to Pr.1199**	User parameter read (RAM)	Y2C	X2C	Always allowed
		User parameter write (RAM)	Y2D	X2D	
		User parameter read (EEPROM/RAM)	Y2E	X2E	
		User parameter write (EEPROM/RAM)	Y2F	X2F	

Turn the read/write instruction from OFF to ON and then turn the read/write completion ON to read/write the user parameters from RAM and EEPROM.

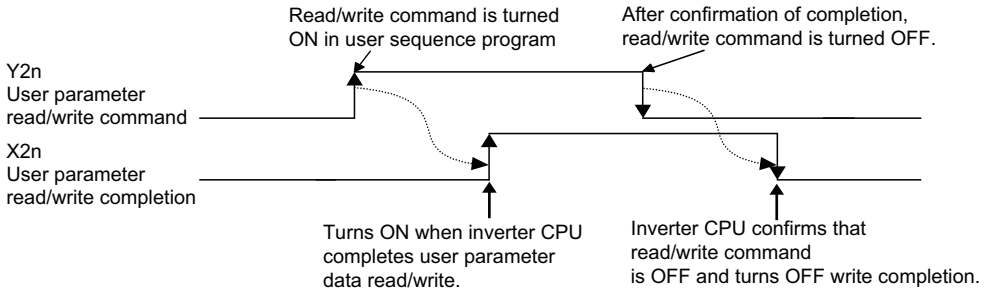

Point

• Application example of user parameter

Operation timings can be adjusted by assigning a timer in D206 and varying the value set in the timer. Values can be set to the timer with the **Pr.1150** setting without changing the program.

The user parameters (**Pr.1150 to Pr.1199**) and the devices (D206 to D255) can be freely read and written. Data transfer between **Pr.1150 to Pr.1199** and D206 to D255 is automatically executed.

1) Writing of user parameter and devices

When values are written to **Pr.1150 to Pr.1199** via the operation panel, a parameter unit, or communication, they are written to the RAM area and the EEPROM area for parameter storage and also to D206 to D255 at the same time.

2) Reading user parameters and devices

When values are written to D206 to D255 using the PLC function, they are written to the RAM area for storing parameters (**Pr.1150 to Pr.1199**) and read via the operation panel, a parameter unit, or communication. (Since they are not written to EEPROM, resetting the power restores the previous values.)

3) Process at inverter reset or power restoration

When the inverter is reset, the values of **Pr.1150 to Pr.1199** stored in EEPROM are transferred to the RAM area and to D206 to D255.

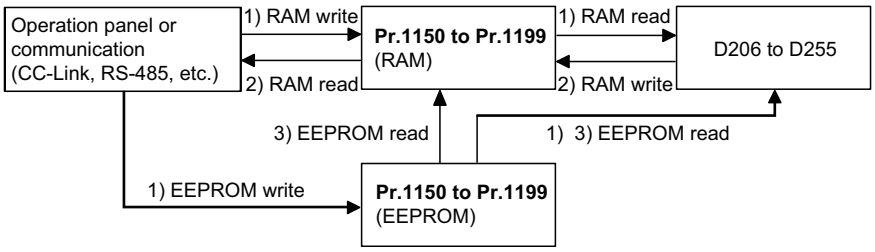

NOTE

- If EEPROM is read after writing a parameter directly (to RAM), the values in RAM are replaced by the values in EEPROM.
- When **Pr.342 Communication EEPROM write selection** = "1", RAM values are read or written.

1.13 Analog I/O function

1.13.1 Analog input

Analog input values from terminals 1, 2, 4, and 6 can be read from SD1245 to SD1247, and SD1300, respectively.

Device number	Terminal name	Setting increments	Data access condition
SD1245	Terminal 1 input	0.1%	Always allowed (FR-A800, FR-A800 Plus, and FR-F800 series only)
SD1246	Terminal 2 input	0.1%	Always allowed
SD1247	Terminal 4 input	0.1%	
SD1300	Terminal 6 input (FR-A8AZ)	0.1%	Always allowed (FR-A800 series and FR-A800 Plus series only)

The actual reading is performed at END processing of the sequence program.

NOTE

- The full scale value of analog input (terminals 1, 2, and 4) depends on the setting values of **Pr.73 Analog input selection and Pr.267 Terminal 4 input selection**. Refer to the Instruction Manual of the inverter.
- The input value is an instantaneous value regardless of the parameter settings (**Pr.74, Pr.822, Pr.826**).

1.13.2 Analog output

Write values from SD1251 to SD1254, and SD1301 to enable analog output from respective terminals.
Write "70" to the output signal selection parameter of each terminal (Terminal FM/CA: **Pr.54**, Terminal AM: **Pr.158**, FR-A8AY Terminal AM0, AM1: **Pr.306, Pr.310**, FR-A8AZ Terminal DA1: **Pr.838**) to enable output from PLC function.

Device number	Terminal name	Setting increments	Data access condition
SD1251	Terminal FM/CA*1	0.1%	Always allowed*1
SD1252	Terminal AM	0.1%	
SD1253	Terminal AM0 (FR-A8AY)	0.1%	
SD1254	Terminal AM1 (FR-A8AY)	0.1%	
SD1301	Terminal DA1 (FR-A8AZ)	0.1%	Always allowed (FR-A800 series and FR-A800 Plus series only)

*1 Only for FR-E800, writing values to SD1251 or SD1252 enables analog output from the FM or AM terminal installed to the inverter.

The actual reading is performed at END processing of the sequence program.

1.14 Pulse train input function

The pulse train input function can be set in the FR-A800 series, FR-A800 Plus series, and FR-F800 series.
Pulse train input values from terminal JOG can be read with the PLC function.
To read pulse train input values with the PLC function, set the terminal JOG by setting **Pr.291 Pulse train I/O selection** = "1, 11, 21, or 100" and **Pr.384 Input pulse division scaling factor** = "0 (initial value)".
After setting terminal JOG, set SD1240 to "1" to start counting the number of sampling pulses and accumulated count values.
Pulse train (the number of sampling pulses) from terminal JOG is stored to SD1236. When the sampling pulses overflow, make adjustment with the setting of **Pr. 416 and Pr. 417**.
The number of sampling pulses= the number of input pulses per count cycle × pre-scale setting value (**Pr. 417**) × increments scaling factor (**Pr. 416**)

Parameter	Name	Initial value	Setting range	Description
291	Pulse train I/O selection	0	0, 10, 20*1	Terminal JOG
			1, 11, 21, 100*1	Pulse train input
416	Pre-scale function selection	0	0 to 5	Pre-scale function selection (increments scaling factor) 0: No function 1: ×1 2: ×0.1 3: ×0.01 4: ×0.001 5: ×0.0001
417	Pre-scale setting value	1	0 to 32767	Set the pre-scale value to calculate the number of sampling pulse when inputting the pulse train.

*1 The settings of "10, 11, 20, 21, and 100" are available only for the FM type.

Device number	Name	Setting range	Description
SD1236	Pulse train input sampling pulse	0 to 32767	The number of pulses counted in count cycle is stored.
SD1237	Pulse train input cumulative count value L	0 to 99999999	The cumulative value of the number of sampling pulses is stored.
SD1238	Pulse train input cumulative count value H		
SD1239	Reset request of pulse train input count	0	Not clear
		1	Count clear
SD1240	Count start of the pulse train input	0	Stop counting
		1	Start counting

1.15 PID control

◆ For FR-A800/FR-A800 Plus/FR-F800 series

Set **Pr.128 (Pr.753)** to enable setting of set point/ deviation and measured value for PID control with PLC function.

PID operation is performed using the value of SD1248 (SD1308) as the set point/deviation, and the value of SD1249 (SD1309) as the measured value. The manipulated amount will be stored in SD1250 (SD1310).

To perform first PID control using the PLC function, set "1" in SD1255. When "14 (80)" is set in any of **Pr.178 to Pr.189 (input terminal function selection)** to assign the X14 (X80) signal, turn ON X14 (X80) and set "1" in SD1255.

When **Pr.128** = "70, 71, 80, or 81", PID operation is performed after the start. Thus, even if "1" is set in SD1255, the manipulated amount of SD1250 remains the same and the value of SD1250 is unchanged from "0".

When **Pr.128** = "90, 91, 100, or 101" and "1" is set in SD1255, PID operation is performed and the operation result is applied to the manipulated amount SD1250.

Set **Pr.753** to enable the second PID control (SD1308 to SD1310).

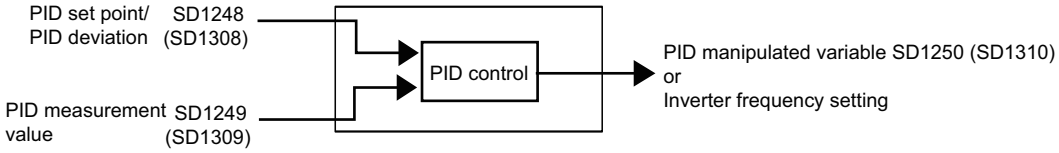

Parameter	Name	Initial value	Setting range	Description	
128 753	PID action selection	0	0	PID control disabled	
			10, 11, 20, 21, 40 to 43, 50, 51, 60, 61, 1000, 1001, 1010, 1011, 2000, 2001, 2010, 2011	For details, refer to the Instruction Manual of the inverter.	
			70	PID reverse action	Deviation signal input (PLC function)
			71	PID forward action	
			80	PID reverse action	Measured value and set point input (PLC function)
			81	PID forward action	
			90	PID reverse action	Deviation signal input (PLC function) Not applied to inverter output frequency.
			91	PID forward action	
			100	PID reverse action	Measured value and set point input (PLC function) Not applied to inverter output frequency.
			101	PID forward action	

Device number	Name	Setting range	Description
SD1248	PID control set point/ deviation	Set point: 0 to 100% *1 Deviation: -100 to 100%	Set the PID set point or the PID deviation (in 0.01% increments *1).
SD1249	PID control measured value	0 to 100% *1	Set the PID measured value (in 0.01% increments *1).
SD1250	PID control manipulated amount	-100 to 100%	Stores the PID manipulated amount (in 0.01% increments).
SD1255	PID operation control	0	Stops PID control.
		1	Starts first PID control.
		2	Starts second PID control
		3	Starts the first and second PID controls.
SD1308	Second PID control set point/ deviation	Set point: 0 to 100% *1 Deviation: -100 to 100%	Set the second PID set point or the second PID deviation (in 0.01% increments *1).
SD1309	Second PID control measured value	0 to 100% *1	Set the second PID measured value (in 0.01% increments*1).
SD1310	Second PID control manipulated amount	-100 to 100%	Stores the second PID manipulated amount (in 0.01% increments).

*1 When both **Pr.934 and Pr.935** are set to values other than "9999", the set point of SD1248 (SD1308) and the measured value of SD1249 (SD1309) are set as coefficients. The setting range is from the smaller coefficient to the larger one set in **Pr.934** and **Pr.935**.
(For details of **Pr.934 and Pr.935**, refer to the Instruction Manual of the inverter.)

NOTE

- Depending on the setting value of **Pr.128 (Pr.753)**, SD1248 (SD1308) automatically switches between set point and deviation.
- When **Pr.128 (Pr.753)** is set to deviation input "70, 71, 90, or 91", the value set as the measured value in (SD1249 (SD1309)) becomes invalid.
- If an out-of-range value is set, the maximum value (or the minimum value) of the setting range is used for operation.

◆ For FR-E800 series

Set **Pr.128** to enable setting of set point/ deviation and measured value for PID control with PLC function.

PID operation is performed using the value of SD1248 as the set point/deviation, and the value of SD1249 as the measured value. The manipulated amount will be stored in SD1250.

To perform first PID control using the PLC function, set "1" in SD1255. When "14" is set in any of **Pr.178 to Pr.189 (input terminal function selection)** to assign the X14 signal, turn ON X14 and set "1" in SD1255.

When X14 is not set to the input terminal function selection, start/stop of the operation can be set with bit 0 of SD1255.

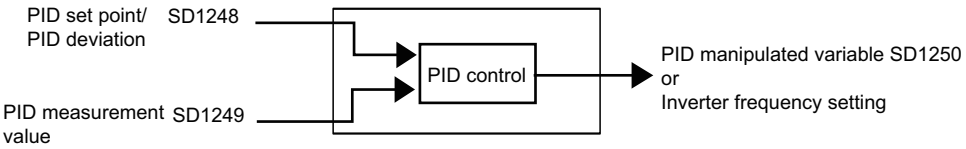

Parameter	Name	Initial value	Setting range	Description	
128	PID action selection	0	0	PID control disabled	
			20, 21, 40 to 43, 50, 51, 60, 61	For details, refer to the Instruction Manual of the inverter.	
			1000	PID reverse action	Set point/measured value input
			1001	PID forward action	
			1010	PID reverse action	Deviation input
			1011	PID forward action	
			2000	PID reverse action	Set point/measured value input (without frequency reflected)
			2001	PID forward action	
			2010	PID reverse action	Deviation input (without frequency reflected)
			2011	PID forward action	

Device number	Name	Setting range	Description
SD1248	PID control set point/ deviation	Set point: 0 to 100% *1 Deviation: -100 to 100%	Set the PID set point or the PID deviation (in 0.01% increments *1).
SD1249	PID control measured value	0 to 100% *1	Set the PID measured value (in 0.01% increments *1).
SD1250	PID control manipulated amoun	-100 to 100%	Stores the PID manipulated amount (in 0.01% increments).
SD1255	PID operation control	0	Stops PID control.
		1	Starts PID control.

*1 When both **Pr.934 and Pr.935** are set to values other than "9999", the set point of SD1248 and the measured value of SD1249 are set as coefficients. The setting range is from the smaller coefficient to the larger one set in **Pr.934 and Pr.935**.
(For details on **Pr.934 and Pr.935**, refer to the FR-E800 Instruction Manual (Function).)

NOTE

- Depending on the setting value of **Pr.128**, SD1248 automatically switches between set point and deviation.
- If an out-of-range value is set, the maximum value (or the minimum value) of the setting range is used for operation.

1.16 Clearing the flash memory of the PLC function

Set **Pr.498** to "9696" to clear the flash memory used for the PLC function.

Pr.	Name	Initial value	Setting range	Description	
498	PLC function flash memory clear	0	0, 9696 (0 to 9999)	0: Clears the flash memory fault display (no operation after writing while the flash memory is in normal operation).	Write
				9696: Clears the flash memory (no operation after writing during flash memory fault).	
				Other than 0 and 9696: Outside of the setting range	
				0: Normal display	Read
				1: The flash memory has not been cleared because the PLC function is enabled.	
				9696: During flash memory clearing operation or flash memory fault	

- If the file password (registered by FR Configurator2 (Developer)) of the PLC function has been forgotten, use **Pr.498** to clear the flash memory and unlock the file password.
- The flash memory can only be cleared when the PLC function is disabled (**Pr.414** ="0").
- Setting **Pr.498** = "9696" clears the flash memory. It takes approximately 30 s at the maximum to clear the flash memory.
- When the flash memory clearing is completed, the **Pr.498** value changes to "0" to notify the completion.
- Check if **Pr.498** = "0" before turning OFF the inverter power or performing an inverter reset after the flash memory is cleared.
- When the inverter power is turned OFF or an inverter reset is performed during the flash memory clearing operation, the flash memory is not cleared properly. The read value of **Pr.498** becomes "9696" when the flash memory clearing has not been completed properly due to turning OFF of the power or the inverter reset. If the read value of **Pr.498** becomes "9696", clear the flash memory according to the following procedure.

FR-DU08

Set **Pr.498** = "0". Then, set **Pr.498** = "9696" again to retry clearing.

FR-LU08 or FR-PU07

Set **Pr.498** = "9696" again to retry clearing.

NOTE

- Executing this function clears the PLC function program and all parameters of the PLC function. Create the program and set the parameters of the PLC function again.
- While the PLC function is enabled (**Pr.414** = "1 or 2"), setting Pr.498 = "9696" does not clear the flash memory. When the flash memory clearing is attempted while the PLC function is enabled, the **Pr.498** value changes to "1" to notify that the PLC function is enabled. Disable the PLC function (**Pr.414** = "0"). After the inverter is reset, retry clearing.
- If a value other than "0 or 9696" is set in **Pr.498**, Er1 (write disable error) will occur.

1.17 Constant scan

A constant scan time can be maintained for the sequence programs.
Configure the setting using FR Configurator2 (Developer).

PLC parameter	Name	Initial value	Setting range
PLC RAS setting	Constant scan setting	None	0.5 ms to 2000 ms

- A waiting time is automatically set so that the sum of the execution time of the sequence programs and the waiting time is equal to the set constant scan time.
- PLC parameter: Although the setting range of PLC RAS setting is 0.5 ms to 2000 ms, the actual set constant scan time is a minimum of 10 ms. (Increments: 10 ms)

Setting value	Set constant scan time
0.5 ms to 10.0 ms	10ms
10.5 ms to 20.0 ms	20ms
...	...
1990.5 ms to 2000.0 ms	2000ms

- I/O timing

After END processing is completed, a waiting time is automatically set as shown below.

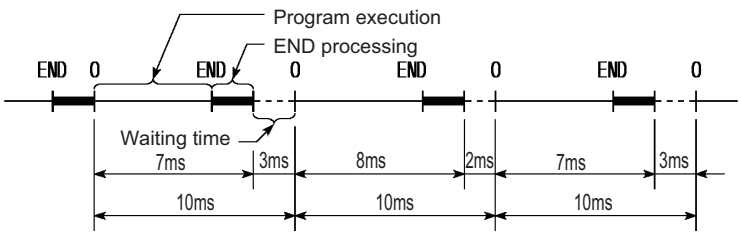

Constant scan: operation when set to 10 ms.

NOTE

- Processes other than the PLC function are executed even during the waiting time.
- The set constant scan time must meet the following condition:

Set watchdog timer time > set constant scan time > maximum scan time of program.

- If a scan time is longer than the set constant scan time, "PRG.TIME OVER Error code: 5010" occurs. In this case, the constant scan setting is ignored in the operation.
- If a scan time is longer than the set watchdog timer time, a watchdog timer error is detected and execution of the sequence program stops. (Refer to page 46.)
- Only the "Execute it while waiting for constant scan setting" is enabled for the service processing setting. Settings other than "Execute it while waiting for constant scan setting" are ignored and no error occurs even if they are set.
- Scan time monitoring in FR Configurator2 (Developer) monitors the scan time including the waiting time for constant scan.

CHAPTER 2 CC-LINK COMMUNICATION

2.1 System configuration 74
2.2 CC-Link parameter 76
2.3 CC-Link I/O specifications 77
2.4 Buffer memory 88

2 CC-LINK COMMUNICATION

2.1 System configuration

2.1.1 System configuration example

- Programmable controller side

Mount the "CC-Link system master/local module" on the main base unit or extension base unit that uses the programmable controller CPU as the master station.

- Use the CC-Link dedicated cable to connect the CC-Link programmable controller module (master station) to the inverter.

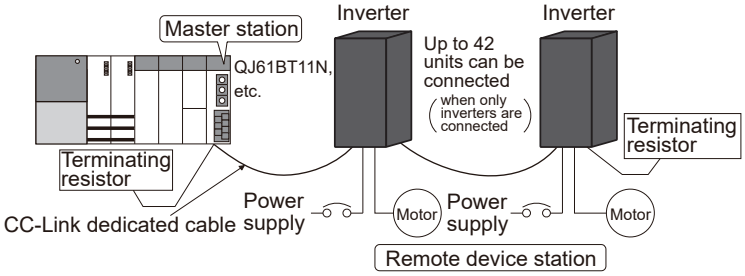

NOTE

- For details on CC-Link communication wiring and the CC-Link cable, refer to the Instruction Manual of the FR-A8NC.

◆ Function block diagram

The following function blocks explain the I/O information flow to and from the inverter in CC-Link.

- Link refresh between the master station of CC-Link system and the inverter is continuously performed at 3.5 to 18 ms (512 points).
- I/O refresh and the sequence program of the master station are executed asynchronously.
- Data read from the inverter is read from the buffer memory of the CC-Link system master/local module using FROM instruction.
- Data to be written to the inverter is written to the buffer memory of the CC-Link system master/local module using TO instruction.

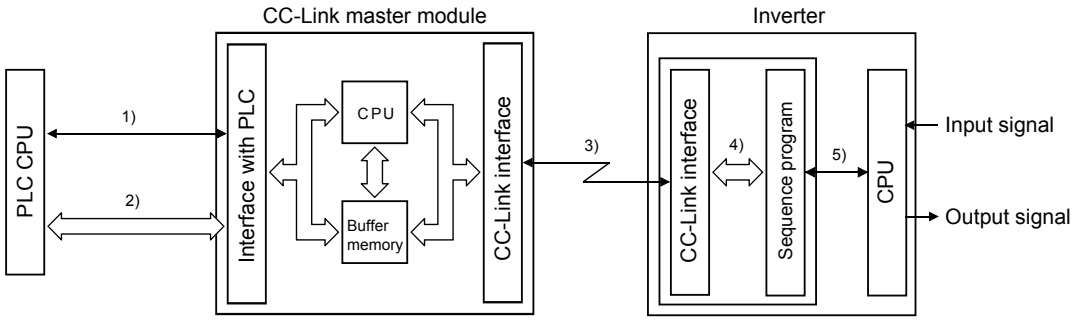

1)	CC-Link module I/O signals	I/O signals assigned to the CC-Link system master/local module. These signals are for communication between the programmable controller CPU and the CC-Link system master/local module.
2)	Reading from/writing to the buffer memory	Information that is input to the inverter can be read, and output information can be written. FROM/TO instruction of the sequence program enables reading from/writing to the buffer memory. For details on the buffer memory, refer to page 88.
3)	CC-Link dedicated cable	The PLC link start instruction is sent from the sequence program. After PLC link starts, link refresh is continuously performed asynchronously with execution of the sequence program.
4)	Sequence program	The sequence program exchanges I/O information between the CC-Link system master/local module and the inverter CPU.
5)	I/O information	The CC-Link system master/local module and the inverter CPU exchange I/O information. (When CC-Link is not used, only 5) is performed and 1) to 4) are not related to the operation.)

NOTE

- Programs cannot be read or written via CC-Link communication.

Point

- The differences between the normal CC-Link communication (**Pr.544** = "1, 12, 14, 18, 24, or 28") and the CC-Link communication with the PLC function (**Pr.544** = "100, 112, 114, 118, or 128") are shown below. In the FR-A800, FR-A800 Plus, and FR-F800 series, **Pr.544** can be set to "24", "28", and "128".

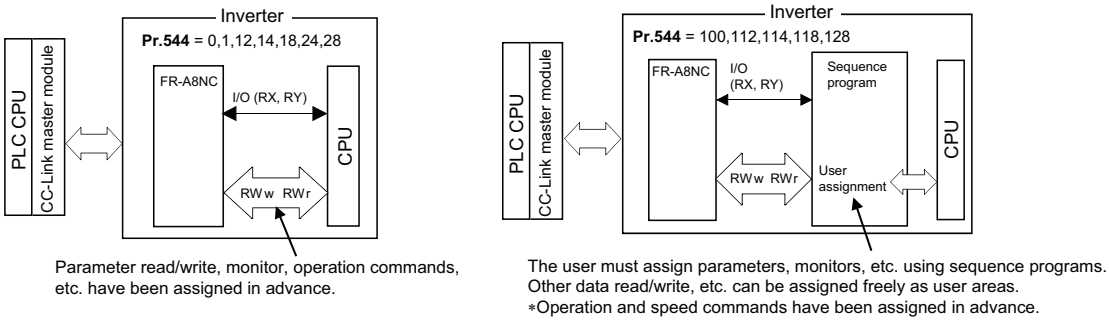

2.2 CC-Link parameter

2.2.1 CC-Link extended setting (Pr.544)

The functions of the remote register can be extended.

Parameter number	Name	Initial value	Setting range	CC-Link Ver.	Description
544	CC-Link extended setting	0	0	1	Occupies one station (FR-A5NC compatible) *1
			1		Occupies one station
			12 *2	2	Occupies one station, double
			14 *2		Occupies one station, quadruple
			18 *2		Occupies one station, octuple
			24 *2*3		Occupies one station, quadruple
			28 *2*3		Occupies one station, octuple
			38 *2*6		Occupies one station, octuple, user defined cyclic communication data selected
			100*4	1	Occupies one station (PLC function)
			112 *2*4	2	Occupies one station, double (PLC function)
			114 *2*4		Occupies one station, quadruple (PLC function)
			118 *2*4		Occupies one station, octuple (PLC function)
			128 *2*3		Occupies one station, octuple (PLC function)
			138 *2*5*6		Occupies one station, octuple (PLC function), user defined cyclic communication data selected

*1 The program used for the conventional series inverter option (FR-A5NC) can be used.
*2 When using the double, quadruple, or octuple settings of the CC-Link Ver.2, station data of the master station must be set to double, quadruple, or octuple. (If the master station is CC-Link Ver.1, this setting is not available.)
*3 The value is valid only for the FR-A800 series, FR-A800 Plus series, and FR-F800 series.
*4 For the CC-Link IE TSN communication with the FR-E800 series, the parameter functions as "118" (CC-Link Ver.2, one station occupied, octuple) is set even though **Pr.544** = "100", "112", or "114".
*5 For the CC-Link IE TSN communication with the FR-E800 series, settings are as follows when Pr.544 = "138": CC-Link Ver.2, one station occupied, octuple, user defined cyclic communication data selected (PLC function). For communication other than the CC-Link IE TSN communication, the parameter functions as "118" (CC-Link Ver.2, one station occupied, octuple) is set even though Pr.544 = "138".
*6 The value is valid only for the FR-E800 series.

NOTE

- The setting becomes valid after inverter reset.
- For the CC-Link IE TSN communication with the FR-A800 or FR-F800 series, setting **Pr.544** is not required.

2.3 CC-Link I/O specifications

2.3.1 I/O signals when one station in the CC-Link Ver.1 is occupied (Pr.544 = "100")

The number of device points available in CC-Link communication are 32 input (RX) points (14 points for the PLC function), 32 output (RY) points (16 points for the PLC function), 4 remote register (RWr) points, and 4 remote register (RWw) points.

◆ Remote I/O (for FR-A800, FR-A800 Plus, FR-F800 series)

PLC function device number	Remote output device number	Signal name
X30	RYn0	Forward rotation command[*2]
X31	RYn1	Reverse rotation command[*2]
X32	RYn2	High-speed operation command (Terminal RH function)[*1]
X33	RYn3	Middle-speed operation command (Terminal RM function)[*1]
X34	RYn4	Low-speed operation command (Terminal RL function)[*1]
X35	RYn5	JOG operation command (Terminal JOG function)[*1]
X36	RYn6	Second function selection (Terminal RT function)[*1]
X37	RYn7	Current input selection (Terminal AU function)[*1]
X38	RYn8	Selection of automatic restart after instantaneous power failure (Terminal CS function)[*1*3]
X39	RYn9	Output stop[*2]
X3A	RYnA	Start self-holding selection (Terminal STP (STOP) function)[*1]
X3B	RYnB	Reset (Terminal RES function)[*1]
X3C	RYnC	General-purpose remote input for PLC function
X3D	RYnD	
X3E	RYnE	
X3F	RYnF	
—	RY (n+1) 0 to RY (n+1) 7	Reserved
—	RY (n+1) 8	Unused (Initial data process completion flag)
—	RY (n+1) 9	Unused (Initial data process request flag)
—	RY (n+1) A	Error reset request flag
—	RY (n+1) B to RY (n+1) F	Reserved

PLC function device number	Remote input device number	Signal name
—	RXn0	Forward rotating
—	RXn1	Reverse rotating
Y32	RXn2	Running (Terminal RUN function)[*4]
Y33	RXn3	Up to frequency (Terminal SU function)[*4]
Y34	RXn4	Overload alarm (Terminal OL function)[*4*6]
Y35	RXn5	Instantaneous power failure (Terminal IPF function)[*4*7]
Y36	RXn6	Frequency detection (Terminal FU function)[*4]
Y37	RXn7	Fault (Terminal ABC1 function)[*4]
Y38	RXn8	— (Terminal ABC2 function)[*4]
Y39	RXn9	**Pr.313** assignment function (DO0)[*5]
Y3A	RXnA	**Pr.314** assignment function (DO1)[*5]
Y3B	RXnB	**Pr.315** assignment function (DO2)[*5]
Y3C	RXnC	General-purpose remote output for PLC function
Y3D	RXnD	
Y3E	RXnE	
Y3F	RXnF	
—	RX (n+1) 0 to RX (n+1) 7	Reserved
—	RX (n+1)8	Unused (Initial data process request flag)
—	RX (n+1) 9	Unused (Initial data process completion flag)
—	RX (n+1) A	Error status flag
—	RX (n+1) B	Remote station ready
	RX (n+1) C to RX (n+1) F	Reserved

("n" indicates a value determined by the station number setting.)

*1 This signal is assigned in the initial status. Used for general-purpose remote input in the PLC function by setting "9999" in any of **Pr.180 to Pr.186**, **Pr.188**, or **Pr.189**.

*2 The signals of RYn0, RYn1, and RYn9 cannot be changed. Signals changed using **Pr.178**, **Pr.179**, and **Pr.187** are invalid. However, RYn9 is used for general-purpose remote input in the PLC function by setting "9999" in **Pr.187** when the Ethernet communication (CC-Link IE Field Network Basic) is selected. For details on **Pr.178 to Pr.189**, refer to the Instruction Manual of the inverter.

*3 For the FR-F800 series, no function is assigned in the initial setting.

*4 This signal is assigned in the initial status. Used for general-purpose remote output in the PLC function by setting "9999" in any of **Pr.190 to Pr.196**. For details on **Pr.190 to Pr.196**, refer to the Instruction Manual of the inverter.

*5 Output signals can be assigned using **Pr.313 to Pr.315**.
For details on the signals, refer to the description of **Pr.190 to Pr.196** in the Instruction Manual of the inverter.

*6 When "9999" is set in **Pr.192**, the device operates as Instantaneous power failure (IPF signal).

*7 When "9999" is set in **Pr.193**, the device operates as Overload warning (OL signal).

◆ Remote I/O (for FR-E800 series)

PLC function device number	Remote output device number	Signal name
X30	RYn0	Forward rotation command*2
X31	RYn1	Reverse rotation command*2
X32	RYn2	High-speed operation command (Terminal RH function)*1
X33	RYn3	Middle-speed operation command (Terminal RM function)*1
X34	RYn4	Low-speed operation command (Terminal RL function)*1
X35	RYn5	Reserved
X36	RYn6	
X37	RYn7	
X38	RYn8	No function (Terminal NET X1 function) *1
X39	RYn9	Output stop (Terminal MRS function)*1
X3A	RYnA	No function (Terminal NET X2 function) *1
X3B	RYnB	Reset (Terminal RES function)*1
X3C	RYnC	General-purpose remote input for PLC function
X3D	RYnD	
X3E	RYnE	
X3F	RYnF	
—	RY (n+1) 0 to RY (n+1) 7	Reserved
—	RY (n+1) 8	Unused (Initial data process completion flag)

PLC function device number	Remote input device number	Signal name
—	RXn0	Forward rotating
—	RXn1	Reverse rotating
Y32	RXn2	Running (Terminal RUN function)*3
—	RXn3	Up to frequency (SU signal) *2
—	RXn4	Overload alarm (OL signal) *2
Y35	RXn5	No function (Terminal NET Y1 function) *3
Y36	RXn6	Frequency detection (Terminal FU function)*3
Y37	RXn7	Fault (Terminal ABC function)*3
Y38	RXn8	No function (Terminal NET Y2 function) *3
Y39	RXn9	**Pr.313** assignment function (DO0)*4
Y3A	RXnA	**Pr.314** assignment function (DO1)*4
Y3B	RXnB	**Pr.315** assignment function (DO2)*4
Y3C	RXnC	General-purpose remote output for PLC function
Y3D	RXnD	
Y3E	RXnE	
Y3F	RXnF	
—	RX (n+1) 0 to RX (n+1) 5	Reserved
—	RX (n+1) 6	No function (Terminal NET Y3 function) *3
—	RX (n+1) 7	No function (Terminal NET Y4 function) *3
—	RX (n+1) 8	Unused (Initial data process request flag)

PLC function device number	Remote output device number	Signal name
–	RY (n+1) 9	Unused (Initial data process request flag)
–	RY (n+1) A	Error reset request flag
–	RY (n+1) B	No function (Terminal NET X3 function) *1
–	RY (n+1) C	No function (Terminal NET X4 function) *1
–	RY (n+1) D	No function (Terminal NET X5 function) *1
–	RY (n+1) E to RY (n+1) F	Reserved

PLC function device number	Remote input device number	Signal name
–	RX (n+1) 9	Unused (Initial data process completion flag)
–	RX (n+1) A	Error status flag
–	RX (n+1) B	Remote station ready
–	RX (n+1) C to RX (n+1) F	Reserved

("n" indicates a value determined by the station number setting.)

*1 This signal is assigned in the initial status. Used for general-purpose remote input in the PLC function by setting "9999" in any of **Pr.180 to Pr.189**.

*2 The signals are fixed. They cannot be changed using parameters. However, RYn9 is used for general-purpose remote input in the PLC function by setting "9999" in **Pr.183** when the Ethernet communication (CC-Link IE Field Network Basic) is selected.
For details on **Pr.178 to Pr.189**, refer to the FR-E800 Instruction Manual (Function).

*3 This signal is assigned in the initial status. Used for general-purpose remote output in the PLC function by setting "9999" in any of **Pr.190 to Pr.196**.
For details on **Pr.190 to Pr.196**, refer to the FR-E800 Instruction Manual (Function).

*4 Output signals can be assigned using **Pr.313 to Pr.315**.
For details on the signals, refer to the descriptions of **Pr.190 to Pr.196** in the FR-E800 Instruction Manual (Function).

◆ Remote register

PLC function device number	Address	Description
SD1062	RWwn	Registers for reading data received from the master station.
SD1063	RWwn+1	
SD1064	RWwn+2	
SD1065	RWwn+3	

PLC function device number	Address	Description
SD1078	RWrn	Registers for writing data to be sent to the master station.
SD1079	RWrn+1	
SD1080	RWrn+2	
SD1081	RWrn+3	

("n" indicates a value determined by the station number setting.)

◆ I/O figure

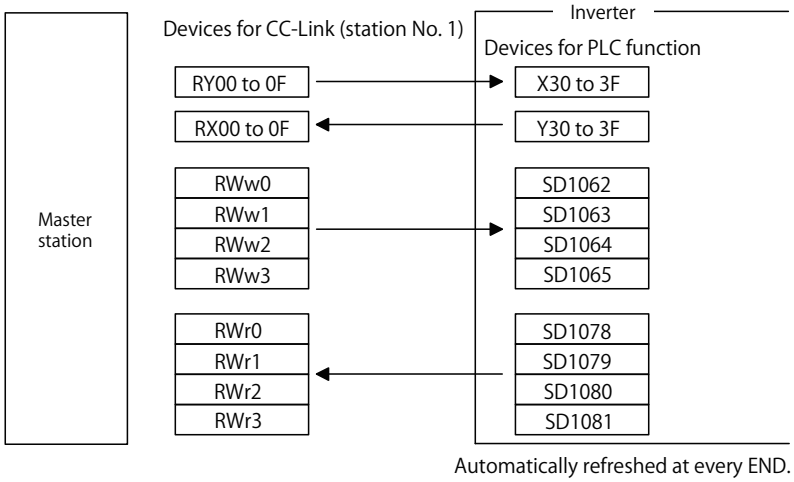

NOTE

- All remote registers are user areas and can be used freely.

2.3.2 I/O signals when the double setting is set in CC-Link Ver.2 (Pr.544 = "112")

The number of device points available in CC-Link communication are 32 input (RX) points (10 points for the PLC function), 32 output (RY) points (12 points for the PLC function), 4 remote register (RWr) points, and 4 remote register (RWw) points.

◆ Remote I/O (for FR-A800, FR-A800 Plus, FR-F800 series)

PLC function device number	Remote output device number	Signal name	PLC function device number	Remote input device number	Signal name
X30	RYn0	Forward rotation command[*2]	—	RXn0	Forward rotating
X31	RYn1	Reverse rotation command[*2]	—	RXn1	Reverse rotating
X32	RYn2	High-speed operation command (Terminal RH function)[*1]	Y32	RXn2	Running (Terminal RUN function)[*4]
X33	RYn3	Middle-speed operation command (Terminal RM function)[*1]	Y33	RXn3	Up to frequency (Terminal SU function)[*4]
X34	RYn4	Low-speed operation command (Terminal RL function)[*1]	Y34	RXn4	Overload alarm (Terminal OL function)[*4*6]
X35	RYn5	JOG operation command (Terminal JOG function)[*1]	Y35	RXn5	Instantaneous power failure (Terminal IPF function) [*4*7]
X36	RYn6	Second function selection (Terminal RT function)[*1]	Y36	RXn6	Frequency detection (Terminal FU function)[*4]
X37	RYn7	Current input selection (Terminal AU function) [*1]	Y37	RXn7	Fault (Terminal ABC function)[*4]
X38	RYn8	Selection of automatic restart after instantaneous power failure (Terminal CS function)[*1*3]	Y38	RXn8	— (Terminal ABC2 function)[*4]
X39	RYn9	Output stop[*2]	Y39	RXn9	**Pr.313** assignment function (DO0)[*5]
X3A	RYnA	Start self-holding selection (Terminal STP (STOP) function)[*1]	Y3A	RXnA	**Pr.314** assignment function (DO1)[*5]
X3B	RYnB	Reset (Terminal RES function)[*1]	Y3B	RXnB	**Pr.315** assignment function (DO2)[*5]
—	RYnC	Monitor command	—	RXnC	Monitoring
—	RYnD	Frequency setting command (RAM)	—	RXnD	Frequency setting completion (RAM)
—	RYnE	Frequency setting command (RAM, EEPROM)	—	RXnE	Frequency setting completion (RAM, EEPROM)
—	RYnF	Instruction code execution request	—	RXnF	Instruction code execution completion
—	RY(n+1)0 to RY(n+1)7	Reserved	—	RX(n+1)0 to RX(n+1)7	Reserved
—	RY(n+1)8	Unused (Initial data process completion flag)	—	—	Unused (Initial data process request flag)
—	RY(n+1)9	Unused (Initial data process request flag)	—	RX(n+1)9	Unused (Initial data process completion flag)
—	RY(n+1)A	Error reset request flag	—	RX(n+1)A	Error status flag

PLC function device number	Remote output device number	Signal name
–	RY(n+1)B to RY(n+1)F	Reserved

PLC function device number	Remote input device number	Signal name
–	RX(n+1)B	Remote station ready
	RX(n+1)C to RX(n+1)F	Reserved

("n" indicates a value determined by the station number setting.)

*1 This signal is assigned in the initial status. Used for general-purpose remote input in the PLC function by setting "9999" in any of **Pr.180 to Pr.186, Pr.188, or Pr.189**.

*2 The signals of RYn0, RYn1, and RYn9 cannot be changed. Signals changed using **Pr.178, Pr.179, and Pr.187** are invalid. However, RYn9 is used for general-purpose remote input in the PLC function by setting "9999" in **Pr.187** when the Ethernet communication (CC-Link IE Field Network Basic) is selected. For details on **Pr.178 to Pr.189**, refer to the Instruction Manual of the inverter.

*3 For the FR-F800 series, no function is assigned in the initial setting.

*4 This signal is assigned in the initial status. Used for general-purpose remote output in the PLC function by setting "9999" in any of **Pr.190 to Pr.196**. For details on **Pr.190 to Pr.196**, refer to the Instruction Manual of the inverter.

*5 Output signals can be assigned using **Pr.313 to Pr.315**.
For details on the signals, refer to the description of **Pr.190 to Pr.196** in the Instruction Manual of the inverter.

*6 When "9999" is set in **Pr.192**, the device operates as Instantaneous power failure (IPF signal).

*7 When "9999" is set in **Pr.193**, the device operates as Overload warning (OL signal).

◆ Remote I/O (for FR-E800 series)

PLC function device number	Remote output device number	Signal name
X30	RYn0	Forward rotation command*2
X31	RYn1	Reverse rotation command*2
X32	RYn2	High-speed operation command (Terminal RH function)*1
X33	RYn3	Middle-speed operation command (Terminal RM function)*1
X34	RYn4	Low-speed operation command (Terminal RL function)*1
X35	RYn5	Reserved
X36	RYn6	
X37	RYn7	
X38	RYn8	No function (Terminal NET X1 function) *1
X39	RYn9	Output stop (Terminal MRS function)*1
X3A	RYnA	No function (Terminal NET X2 function) *1
X3B	RYnB	Reset (Terminal RES function)*1
X3C	RYnC	Monitor command
X3D	RYnD	Frequency setting command (RAM)
X3E	RYnE	Frequency setting command (RAM, EEPROM)
X3F	RYnF	Instruction code execution request

PLC function device number	Remote output device number	Signal name
–	RXn0	Forward rotating
–	RXn1	Reverse rotating
Y32	RXn2	Running (Terminal RUN function)*3
–	RXn3	Up to frequency (SU signal) *2
–	RXn4	Overload alarm (OL signal) *2
Y35	RXn5	No function (Terminal NET Y1 function) *3
Y36	RXn6	Frequency detection (Terminal FU function)*3
Y37	RXn7	Fault (Terminal ABC function)*3
Y38	RXn8	No function (Terminal NET Y2 function) *3
Y39	RXn9	**Pr.313** assignment function (DO0)*4
Y3A	RXnA	**Pr.314** assignment function (DO1)*4
Y3B	RXnB	**Pr.315** assignment function (DO2)*4
–	RXnC	Monitoring
–	RXnD	Frequency setting completion (RAM)
–	RXnE	Frequency setting completion (RAM, EEPROM)
–	RXnF	Instruction code execution completion

PLC function device number	Remote output device number	Signal name
—	RY(n+1)0 to RY(n+1)7	Reserved
—	RY(n+1)8	Unused (Initial data process completion flag)
—	RY(n+1)9	Unused (Initial data process request flag)
—	RY(n+1)A	Error reset request flag
—	RY(n+1)B	No function (Terminal NET X3 function) *1
—	RY(n+1)C	No function (Terminal NET X4 function) *1
—	RY(n+1)D	No function (Terminal NET X5 function) *1
—	RY(n+1)E RY(n+1)F	Reserved

PLC function device number	Remote output device number	Signal name
—	RX(n+1)0 to RX(n+1)5	Reserved
	RX(n+1)6	No function (Terminal NET Y3 function) *3
	RX(n+1)7	No function (Terminal NET Y4 function) *3
—	RX(n+1)8	Unused (Initial data process request flag)
—	RX(n+1)9	Unused (Initial data process completion flag)
—	RX(n+1)A	Error status flag
—	RX(n+1)B	Remote station ready
—	RX(n+1)C to RX(n+1)F	Reserved

("n" indicates a value determined by the station number setting.)

*1 This signal is assigned in the initial status. Used for general-purpose remote input in the PLC function by setting "9999" in any of **Pr.180 to Pr.189**.

*2 The signals are fixed. They cannot be changed using parameters. However, RYn9 is used for general-purpose remote input in the PLC function by setting "9999" in **Pr.183** when the Ethernet communication (CC-Link IE Field Network Basic) is selected.
For details on **Pr.178 to Pr.189**, refer to the FR-E800 Instruction Manual (Function).

*3 This signal is assigned in the initial status. Used for general-purpose remote output in the PLC function by setting "9999" in any of **Pr.190 to Pr.196**.
For details on **Pr.190 to Pr.196**, refer to the FR-E800 Instruction Manual (Function).

*4 Output signals can be assigned using **Pr.313 to Pr.315**.
For details on the signals, refer to the descriptions of **Pr.190 to Pr.196** in the FR-E800 Instruction Manual (Function).

◆ Remote register

PLC function device number	Address	Description	
		Upper 8 bits	Lower 8 bits
—	RWwn	Monitor code 2	Monitor code 1
—	RWwn + 1	Set frequency/torque command*1*2 (0.01 Hz increments)	
—	RWwn + 2	Link parameter extended setting	Instruction code
—	RWwn + 3	Write data	
SD1062	RWwn + 4	Registers for reading data received from the master station.	
SD1063	RWwn + 5		
SD1064	RWwn + 6		
SD1065	RWwn + 7		

PLC function device number	Address	Description	
		Upper 8 bits	Lower 8 bits
—	RWrn	First monitor value	
—	RWrn + 1	Second monitor value	
—	RWrn + 2	Reply code 2	Reply code 1
—	RWrn + 3	Read data	
SD1078	RWrn + 4	Registers for writing data to be sent to the master station.	
SD1079	RWrn + 5		
SD1080	RWrn + 6		
SD1081	RWrn + 7		

("n" indicates a value determined by the station number setting.)

*1 During torque control under Real sensorless vector control or vector control for the FR-A800 series and FR-A800 Plus series (**Pr.804** = "3 or 5")

*2 During torque control under Real sensorless vector control or Vector control for the FR-E800 series (**Pr.804** = "3 or 5")

2.3.3 I/O signals when the quadruple setting is set in CC-Link Ver.2 (Pr. 544 = "114")

The number of device points available in CC-Link communication are 32 input (RX) points (12 points for the PLC function), 32 output (RY) points (12 points for the PLC function), 8 remote register (RWr) points, and 8 remote register (RWw) points.

◆ Remote I/O

Same as when **Pr.544** = "112". (Refer to page 80.)

◆ Remote register

PLC function device number	Address	Description	
		Upper 8 bits	Lower 8 bits
—	RWwn	Monitor code 2	Monitor code 1
—	RWwn + 1	Set frequency/torque command[*1*2] (0.01 Hz increments)	
—	RWwn + 2	Link parameter extended setting	Instruction code
—	RWwn + 3	Write data	
—	RWwn + 4	Monitor code 3	
—	RWwn + 5	Monitor code 4	
—	RWwn + 6	Monitor code 5	
—	RWwn + 7	Monitor code 6	
SD1062	RWwn + 8	Registers for reading data received from the master station.	
SD1063	RWwn + 9		
SD1064	RWwn + A		
SD1065	RWwn + B		
SD1066	RWwn + C		
SD1067	RWwn + D		
SD1068	RWwn + E		
SD1069	RWwn + F		

PLC function device number	Address	Description	
		Upper 8 bits	Lower 8 bits
—	RWrn	First monitor value	
—	RWrn + 1	Second monitor value	
—	RWrn + 2	Reply code 2	Reply code 1
—	RWrn + 3	Read data	
—	RWrn + 4	Third monitor value	
—	RWrn + 5	Fourth monitor value	
—	RWrn + 6	Fifth monitor value	
—	RWrn + 7	Sixth monitor value	
SD1078	RWrn + 8	Registers for writing data to be sent to the master station	
SD1079	RWrn + 9		
SD1080	RWrn + A		
SD1081	RWrn + B		
SD1082	RWrn + C		
SD1083	RWrn + D		
SD1084	RWrn + E		
SD1085	RWrn + F		

("n" indicates a value determined by the station number setting.)

*1 During torque control under Real sensorless vector control or vector control for the FR-A800 series and FR-A800 Plus series (**Pr.804** = "3 or 5")

*2 During torque control under Real sensorless vector control or Vector control for the FR-E800 series (**Pr.804** = "3 or 5")

2.3.4 I/O signals when the octuple setting is set in CC-Link Ver.2 (Pr. 544 = "118 or 128")

The number of device points available in CC-Link communication are 32 input (RX) points (12 points for the PLC function), 32 output (RY) points (12 points for the PLC function), 16 remote register (RWr) points, and 16 remote register (RWw) points.

◆ Remote I/O

Same as when **Pr.544** = "112". (Refer to page 80.)

◆ Remote register

PLC function device number.	Address	Description	
		Upper 8 bits	Lower 8 bits
—	RWwn	Monitor code 2	Monitor code 1
—	RWwn + 1	Set frequency (0.01 Hz increments)	
—	RWwn + 2	Link parameter extended setting	Instruction code
—	RWwn + 3	Write data	
—	RWwn + 4	Monitor code 3	
—	RWwn + 5	Monitor code 4	
—	RWwn + 6	Monitor code 5	
—	RWwn + 7	Monitor code 6	
—	RWwn + 8	Fault record number	H00
—	RWwn + 9	PID set point (0.01% increments)*1	
—	RWwn + A	PID measured value (0.01% increments)*2	
—	RWwn + B	PID deviation (0.01% increments)*3	
—	RWwn + C	Torque command or torque limit*4/ Torque command or torque limit (1st quadrant)*5	
—	RWwn + D	H00 (Empty)*4/ Torque limit (2nd quadrant)*5	
—	RWwn + E	H00 (Empty)*4/ Torque limit (3rd quadrant)*5	
—	RWwn + F	H00 (Empty)*4/ Torque limit (4th quadrant)*5	

PLC function device number.	Address	Description	
		Upper 8 bits	Lower 8 bits
—	RWrn	First monitor value	
—	RWrn + 1	Second monitor value	
—	RWrn + 2	Reply code 2	Reply code 1
—	RWrn + 3	Read data	
—	RWrn + 4	Third monitor value	
—	RWrn + 5	Fourth monitor value	
—	RWrn + 6	Fifth monitor value	
—	RWrn + 7	Sixth monitor value	
—	RWrn + 8	Fault record number	Fault record data
—	RWrn + 9	Fault record (Output frequency)	
—	RWrn + A	Fault record (Output current)	
—	RWrn + B	Fault record (Output voltage)	
—	RWrn + C	Fault record (Energization time)	
—	RWrn + D	H00 (Empty)	
—	RWrn + E		
—	RWrn + F		

*1 Valid when **Pr.128** = "40, 41, 60, 61, 140, or 141".
*2 Valid when **Pr.128** = "60 or 61".
*3 Valid when **Pr.128** = "50 or 51".
*4 Applicable when **Pr.544** ="118".
*5 Applicable when **Pr.544** ="128". (For the FR-A800, FR-A800 Plus series)

PLC function device number	Address	Description	
		Upper 8 bits	Lower 8 bits
SD1062	RWwn + 10	Registers for reading data received from the master station.	
SD1063	RWwn + 11		
SD1064	RWwn + 12		
SD1065	RWwn + 13		
SD1066	RWwn + 14		
SD1067	RWwn + 15		
SD1068	RWwn + 16		
SD1069	RWwn + 17		
SD1070	RWwn + 18		
SD1071	RWwn + 19		
SD1072	RWwn + 1A		
SD1073	RWwn + 1B		
SD1074	RWwn + 1C		
SD1075	RWwn + 1D		
SD1076	RWwn + 1E		
SD1077	RWwn + 1F		

PLC function device number	Address	Description	
		Upper 8 bits	Lower 8 bits
SD1078	RWrn + 10	Registers for writing data to be sent to the master station.	
SD1079	RWrn + 11		
SD1080	RWrn + 12		
SD1081	RWrn + 13		
SD1082	RWrn + 14		
SD1083	RWrn + 15		
SD1084	RWrn + 16		
SD1085	RWrn + 17		
SD1086	RWrn + 18		
SD1087	RWrn + 19		
SD1088	RWrn + 1A		
SD1089	RWrn + 1B		
SD1090	RWrn + 1C		
SD1091	RWrn + 1D		
SD1092	RWrn + 1E		
SD1093	RWrn + 1F		

("n" indicates a value determined by the station number setting.)

2.3.5 I/O signals for the CC-Link IE TSN communication (Pr.544 = "138")

The number of device points available in CC-Link communication are 32 input (RX) points (12 points for the PLC function), 32 output (RY) points (12 points for the PLC function), 16 remote register (RWr) points, and 16 remote register (RWw) points.

◆ Remote I/O (for FR-E800 series)

Same as when Pr.544 = "112". (Refer to page 77.)

However, remote output device number RY (n+1)E is used for writing request for user defined cyclic communication input.

◆ Remote register

PLC function device number.	Address	Description	
		Upper 8 bits	Lower 8 bits
—	RWwn	Monitor code 2	Monitor code 1
—	RWwn + 1	Set frequency (0.01 Hz increments)	
—	RWwn + 2	Link parameter extended setting	Instruction code
—	RWwn + 3	Write data	
—	RWwn + 4	User Defined Cyclic Communication Input 1 Mapping (Pr.1320), lower	
—	RWwn + 5	User Defined Cyclic Communication Input 1 Mapping (Pr.1320), upper	
—	RWwn + 6	User Defined Cyclic Communication Input 1 Mapping (Pr.1321), lower	
—	RWwn + 7	User Defined Cyclic Communication Input 1 Mapping (Pr.1321), upper	
—	RWwn + 8	User Defined Cyclic Communication Input 1 Mapping (Pr.1322), lower	
—	RWwn + 9	User Defined Cyclic Communication Input 1 Mapping (Pr.1322), upper	
—	RWwn + A	User Defined Cyclic Communication Input 1 Mapping (Pr.1323), lower	
—	RWwn + B	User Defined Cyclic Communication Input 1 Mapping (Pr.1323), upper	
—	RWwn + C	User Defined Cyclic Communication Input 1 Mapping (Pr.1324), lower	
—	RWwn + D	User Defined Cyclic Communication Input 1 Mapping (Pr.1324), upper	
—	RWwn + E	User Defined Cyclic Communication Input 1 Mapping (Pr.1325), lower	
—	RWwn + F	User Defined Cyclic Communication Input 1 Mapping (Pr.1325), upper	

PLC function device number.	Address	Description	
		Upper 8 bits	Lower 8 bits
—	RWrn	First monitor value	
—	RWrn + 1	Second monitor value	
—	RWrn + 2	Reply code 2	Reply code 1
—	RWrn + 3	Read data	
—	RWrn + 4	User Defined Cyclic Communication Output 1 Mapping (Pr.1330), lower	
—	RWrn + 5	User Defined Cyclic Communication Output 1 Mapping (Pr.1330), upper	
—	RWrn + 6	User Defined Cyclic Communication Output 1 Mapping (Pr.1331), lower	
—	RWrn + 7	User Defined Cyclic Communication Output 1 Mapping (Pr.1331), upper	
—	RWrn + 8	User Defined Cyclic Communication Output 1 Mapping (Pr.1332), lower	
—	RWrn + 9	User Defined Cyclic Communication Output 1 Mapping (Pr.1332), upper	
—	RWrn + A	User Defined Cyclic Communication Output 1 Mapping (Pr.1333), lower	
—	RWrn + B	User Defined Cyclic Communication Output 1 Mapping (Pr.1333), upper	
—	RWrn + C	User Defined Cyclic Communication Output 1 Mapping (Pr.1334), lower	
—	RWrn + D	User Defined Cyclic Communication Output 1 Mapping (Pr.1334), upper	
—	RWrn + E	User Defined Cyclic Communication Output 1 Mapping (Pr.1335), lower	
—	RWrn + F	User Defined Cyclic Communication Output 1 Mapping (Pr.1335), upper	

PLC function device number	Address	Description	
		Upper 8 bits	Lower 8 bits
SD1062	RWwn + 10	Registers for reading data received from the master station.	
SD1063	RWwn + 11		
SD1064	RWwn + 12		
SD1065	RWwn + 13		
SD1066	RWwn + 14		
SD1067	RWwn + 15		
SD1068	RWwn + 16		
SD1069	RWwn + 17		
SD1070	RWwn + 18		
SD1071	RWwn + 19		
SD1072	RWwn + 1A		
SD1073	RWwn + 1B		
SD1074	RWwn + 1C		
SD1075	RWwn + 1D		
SD1076	RWwn + 1E		
SD1077	RWwn + 1F		

PLC function device number	Address	Description	
		Upper 8 bits	Lower 8 bits
SD1078	RWrn + 10	Registers for writing data to be sent to the master station.	
SD1079	RWrn + 11		
SD1080	RWrn + 12		
SD1081	RWrn + 13		
SD1082	RWrn + 14		
SD1083	RWrn + 15		
SD1084	RWrn + 16		
SD1085	RWrn + 17		
SD1086	RWrn + 18		
SD1087	RWrn + 19		
SD1088	RWrn + 1A		
SD1089	RWrn + 1B		
SD1090	RWrn + 1C		
SD1091	RWrn + 1D		
SD1092	RWrn + 1E		
SD1093	RWrn + 1F		

("n" indicates a value determined by the station number setting.)

2.4 Buffer memory

2.4.1 Remote output signals (master station to inverter)

- Input statuses to the remote device station are stored.
- Each station uses two words.

(Do not use address 16n (n = 2 (X - 1) + 1, X = station number).)

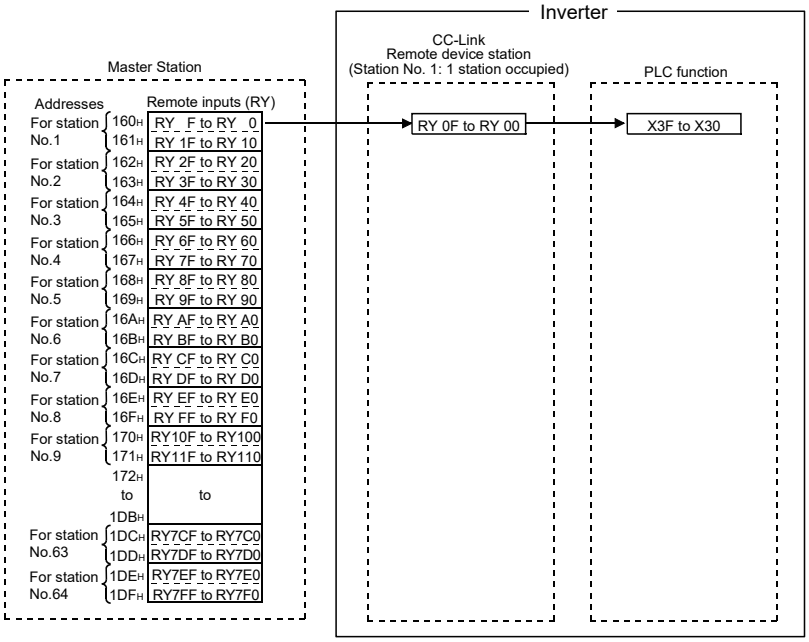

Correspondence table of buffer memory addresses and station numbers of the master station

Station number	Buffer memory address	Station number	Buffer memory address	Station number	Buffer memory address	Station number	Buffer memory address
1	160H	17	180H	33	1A0H	49	1C0H
2	162H	18	182H	34	1A2H	50	1C2H
3	164H	19	184H	35	1A4H	51	1C4H
4	166H	20	186H	36	1A6H	52	1C6H
5	168H	21	188H	37	1A8H	53	1C8H
6	16AH	22	18AH	38	1AAH	54	1CAH
7	16CH	23	18CH	39	1ACH	55	1CCH
8	16EH	24	18EH	40	1AEH	56	1CEH
9	170H	25	190H	41	1B0H	57	1D0H
10	172H	26	192H	42	1B2H	58	1D2H
11	174H	27	194H	43	1B4H	59	1D4H
12	176H	28	196H	44	1B6H	60	1D6H
13	178H	29	198H	45	1B8H	61	1D8H
14	17AH	30	19AH	46	1BAH	62	1DAH
15	17CH	31	19CH	47	1BCH	63	1DCH
16	17EH	32	19EH	48	1BEH	64	1DEH

2.4.2 Remote input signals Pr.544 = "100" (inverter to master station)

- Input statuses from the remote device station are stored.
- Each station uses two words.

(Do not use address En (n = 2 (X - 1) + 1, X = station number).)

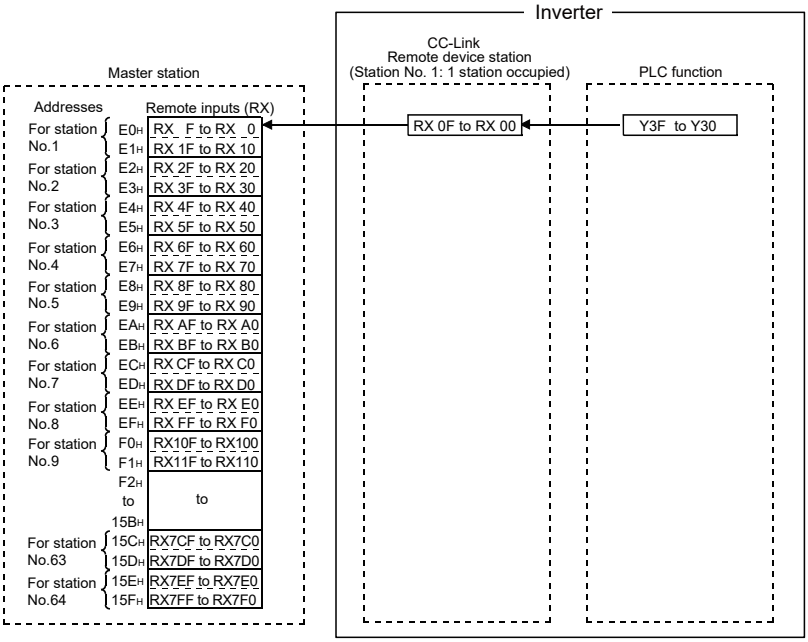

Correspondence table of buffer memory addresses and station numbers of the master station

Station number	Buffer memory address	Station number	Buffer memory address	Station number	Buffer memory address	Station number	Buffer memory address
1	E0H	17	100H	33	120H	49	140H
2	E2H	18	102H	34	122H	50	142H
3	E4H	19	104H	35	124H	51	144H
4	E6H	20	106H	36	126H	52	146H
5	E8H	21	108H	37	128H	53	148H
6	EAH	22	10AH	38	12AH	54	14AH
7	ECH	23	10CH	39	12CH	55	14CH
8	EEH	24	10EH	40	12EH	56	14EH
9	F0H	25	110H	41	130H	57	150H
10	F2H	26	112H	42	132H	58	152H
11	F4H	27	114H	43	134H	59	154H
12	F6H	28	116H	44	136H	60	156H
13	F8H	29	118H	45	138H	61	158H
14	FAH	30	11AH	46	13AH	62	15AH
15	FCH	31	11CH	47	13CH	63	15CH
16	FEH	32	11EH	48	13EH	64	15EH

2.4.3 Remote registers Pr.544 = "100" (master station to inverter)

- Data to be sent to remote registers (RWw) of the remote device station are stored.
- Each station uses four words.

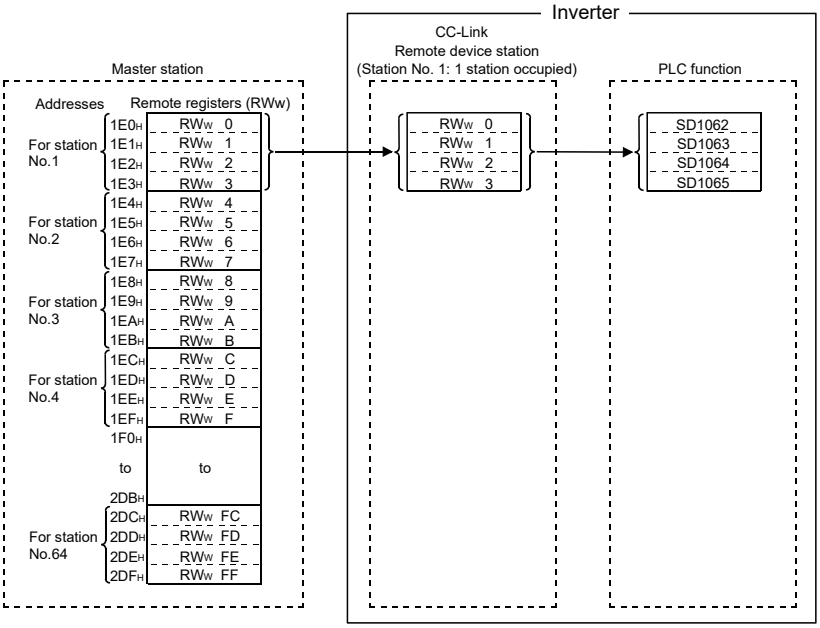

Correspondence table of buffer memory addresses and station numbers of the master station

Station number	Buffer memory address	Station number	Buffer memory address	Station number	Buffer memory address	Station number	Buffer memory address
1	1E0H to 1E3H	17	220H to 223H	33	260H to 263H	49	2A0H to 2A3H
2	1E4H to 1E7H	18	224H to 227H	34	264H to 267H	50	2A4H to 2A7H
3	1E8H to 1EBH	19	228H to 22BH	35	268H to 26BH	51	2A8H to 2ABH
4	1ECH to 1EFH	20	22CH to 22FH	36	26CH to 26FH	52	2ACH to 2AFH
5	1F0H to 1F3H	21	230H to 233H	37	270H to 273H	53	2B0H to 2B3H
6	1F4H to 1F7H	22	234H to 237H	38	274H to 277H	54	2B4H to 2B7H
7	1F8H to 1FBH	23	238H to 23BH	39	278H to 27BH	55	2B8H to 2BBH
8	1FCH to 1FFH	24	23CH to 23FH	40	27CH to 27FH	56	2BCH to 2BFH
9	200H to 203H	25	240H to 243H	41	280H to 283H	57	2C0H to 2C3H
10	204H to 207H	26	244H to 247H	42	284H to 287H	58	2C4H to 2C7H
11	208H to 20BH	27	248H to 24BH	43	288H to 28BH	59	2C8H to 2CBH
12	20CH to 20FH	28	24CH to 24FH	44	28CH to 28FH	60	2CCH to 2CFH
13	210H to 213H	29	250H to 253H	45	290H to 293H	61	2D0H to 2D3H
14	214H to 217H	30	254H to 257H	46	294H to 297H	62	2D4H to 2D7H
15	218H to 21BH	31	258H to 25BH	47	298H to 29BH	63	2D8H to 2DBH
16	21CH to 21FH	32	25CH to 25FH	48	29CH to 29FH	64	2DCH to 2DFH

2.4.4 Remote registers Pr.544 = "100" (inverter to master station)

- Data sent from the remote registers (RWr) of the remote device station are stored.
- Each station uses four words.

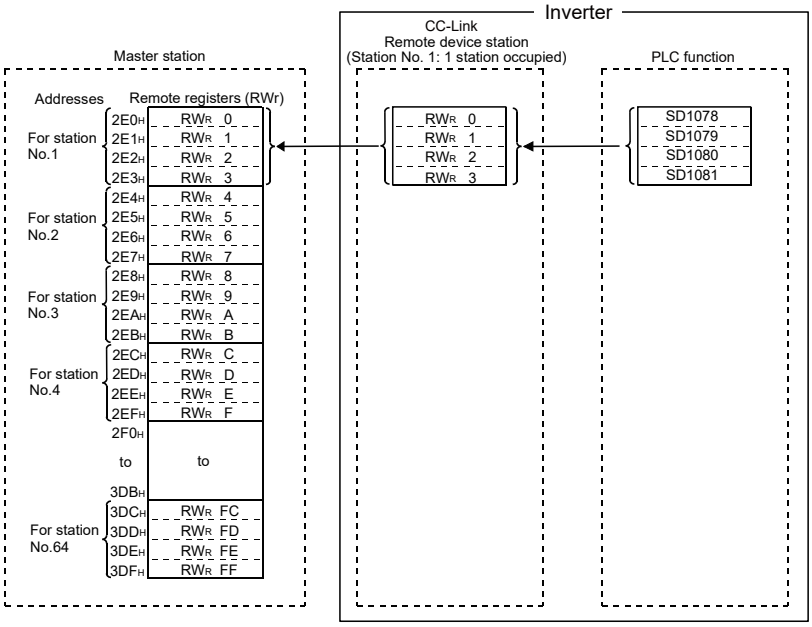

Correspondence table of buffer memory addresses and station numbers of the master station

Station number	Buffer memory address	Station number	Buffer memory address	Station number	Buffer memory address	Station number	Buffer memory address
1	2E0H to 2E3H	17	320H to 323H	33	360H to 363H	49	3A0H to 3A3H
2	2E4H to 2E7H	18	324H to 327H	34	364H to 367H	50	3A4H to 3A7H
3	2E8H to 2EBH	19	328H to 32BH	35	368H to 36BH	51	3A8H to 3ABH
4	2ECH to 2EFH	20	32CH to 32FH	36	36CH to 36FH	52	3ACH to 3AFH
5	2F0H to 2F3H	21	330H to 333H	37	370H to 373H	53	3B0H to 3B3H
6	2F4H to 2F7H	22	334H to 337H	38	374H to 377H	54	3B4H to 3B7H
7	2F8H to 2FBH	23	338H to 33BH	39	378H to 37BH	55	3B8H to 3BBH
8	2FCH to 2FFH	24	33CH to 33FH	40	37CH to 37FH	56	3BCH to 3BFH
9	300H to 303H	25	340H to 343H	41	380H to 383H	57	3C0H to 3C3H
10	304H to 307H	26	344H to 347H	42	384H to 387H	58	3C4H to 3C7H
11	308H to 30BH	27	348H to 34BH	43	388H to 38BH	59	3C8H to 3CBH
12	30CH to 30FH	28	34CH to 34FH	44	38CH to 38FH	60	3CCH to 3CFH
13	310H to 313H	29	350H to 353H	45	390H to 393H	61	3D0H to 3D3H
14	314H to 317H	30	354H to 357H	46	394H to 397H	62	3D4H to 3D7H
15	318H to 31BH	31	358H to 35BH	47	398H to 39BH	63	3D8H to 3DBH
16	31CH to 31FH	32	35CH to 35FH	48	39CH to 39FH	64	3DCH to 3DFH

MEMO

CHAPTER 3 SEQUENCE PROGRAM

3.1 Overview 94
3.2 RUN/STOP operation 96
3.3 Program configuration 96
3.4 Programming language 97
3.5 Operation processing method of the PLC function 99
3.6 I/O processing method 100
3.7 Scan time 102
3.8 Values that can be used in sequence programs 103
3.9 Explanation of devices 105
3.10 Counter C 112
3.11 Data register D 114
3.12 Special relays and special registers 115
3.13 Function list 116
3.14 RUN/STOP method of PLC function from an external source (remote RUN/STOP) 117
3.15 Watchdog timer (watchdog error supervision timer) 119
3.16 Self-diagnostic function 120
3.17 Registering file password 121
3.18 Output (Y) status settings when STOP status → RUN status 123
3.19 Structure of instructions 124
3.20 Bit device processing method 126
3.21 Handling of numerical values 129
3.22 Operation error 130
3.23 Sequence instructions list 131
3.24 How to view instructions 140
3.25 Sequence instructions 141
3.26 Basic instruction (16-bit) 163
3.27 Basic instruction (32-bit) 179
3.28 Application instructions (16-bit) 196
3.29 Application instructions (32-bit) 206
3.30 Display instruction 217

3 SEQUENCE PROGRAM

3.1 Overview

3.1.1 Overview of operation

The following description is of the overview of processing performed after the inverter is turned ON and through to execution of a sequence program.
PLC function processing can roughly be classified into the following three types.

◆ Initial processing

Initial processing is pre-processing to execute sequence operations and is performed only once when the inverter is turned ON or reset.

- Resets to initialize the input and output.
- Initializes the data memory (bit devices are turned OFF and word devices are set to 0).
- Performs self-diagnostic checks on such items as PLC function parameter settings and operation circuits.

NOTE

- PLC function can be checked via FR Configurator2 (Developer). (Refer to the Instruction Manual of FR Configurator2.)

◆ Sequence program operation

Executes a sequence program written in the PLC function from step 0 through the END instruction.

◆ END processing

End processing is post-processing to end operation processing of a sequence program once and return execution to step 0 in the sequence program.

- Performs a self-diagnostic check.
- Updates timers and counters to the present values and turns contacts ON/OFF.

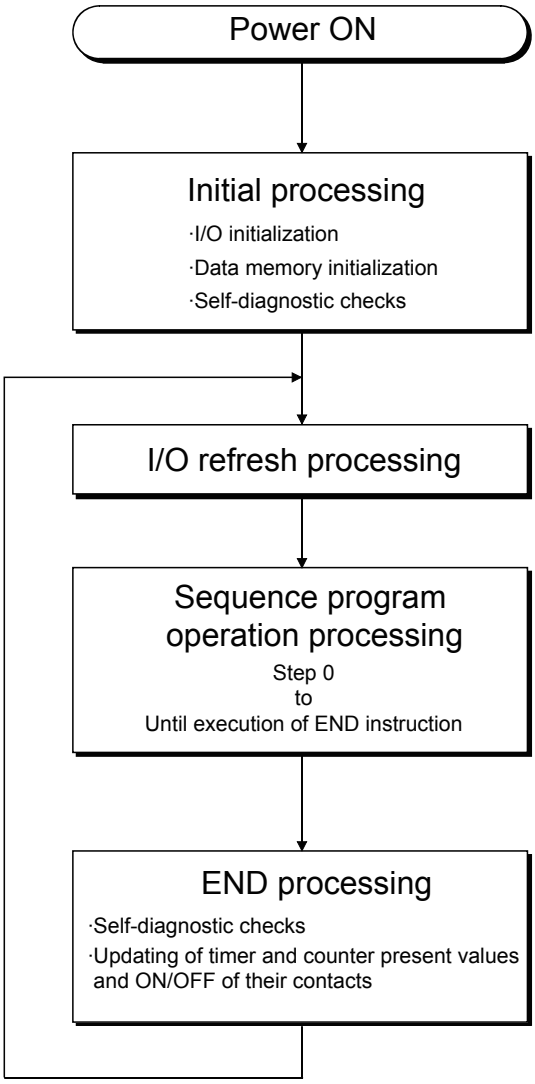
Power ON
Initial processing
·I/O initialization
·Data memory initialization
·Self-diagnostic checks
I/O refresh processing
Sequence program operation processing
Step 0
to
Until execution of END instruction
END processing
·Self-diagnostic checks
·Updating of timer and counter present values and ON/OFF of their contacts

3.2 RUN/STOP operation

The PLC function has two operating statuses, a RUN state and a STOP state.
The following description is of operation processing of the PLC function in each state.

◆ RUN state operation

In the RUN state, the PLC function operates a sequence program in the sequence of step 0→END (FEND) instruction→step 0 repeatedly when the SQ signal is turned ON. (P.RUN is ON)
The output suspended in the STOP state is executed according to the PLC function parameter output mode set for STOP→RUN switching (refer to page 123) when the PLC function enters the RUN state.

◆ STOP state operation

In the STOP state, the PLC function stops operating a sequence program when the SQ signal is turned OFF or the inverter is stopped remotely. (P.RUN is OFF)
The PLC function saves the output status and turns OFF all output points when it enters the STOP state. Data other than the output (Y) is retained in the memory.

Point

- The PLC function performs I/O refresh processing in both RUN and STOP states. Therefore, input/output can be monitored and tested from peripheral devices even in the STOP state.

3.3 Program configuration

◆ Program classification

Programs that can be used in the PLC function are main sequence programs only. Microcomputer programs, interrupt programs, and SFC programs cannot be used.

◆ Program capacity

The program capacity is the memory capacity that stores programs and is 6k steps (24k bytes). Set the program capacity using PLC function parameters (PLC parameters).

3.4 Programming language

Programming the PLC function can be performed through two methods. One uses figures and the other uses dedicated instructions.

- Programming with figures is performed by using the relay symbolic language. (Programming in FR Configurator2 (Developer) is performed in "ladder mode.")
- Programming with dedicated instructions is performed by using the logic symbolic language. (Programming that uses FR Configurator2 (Developer) is performed in "list mode.")

The same program is created with both the relay symbolic language and the logic symbolic language.

Structured text (ST) is a language standardized by IEC 61131-3, the international standard for writing logic programs. Users can write programs in text.

3.4.1 Relay symbolic language (ladder mode)

The relay symbolic language is based on the concept of relay control circuits.

This language allows programming through expressions similar to sequential circuits in relay control.

◆ Ladder block

A ladder block is the smallest elements for the sequence program operation, and starts at a vertical rail on the left side and ends at the one on the right side.

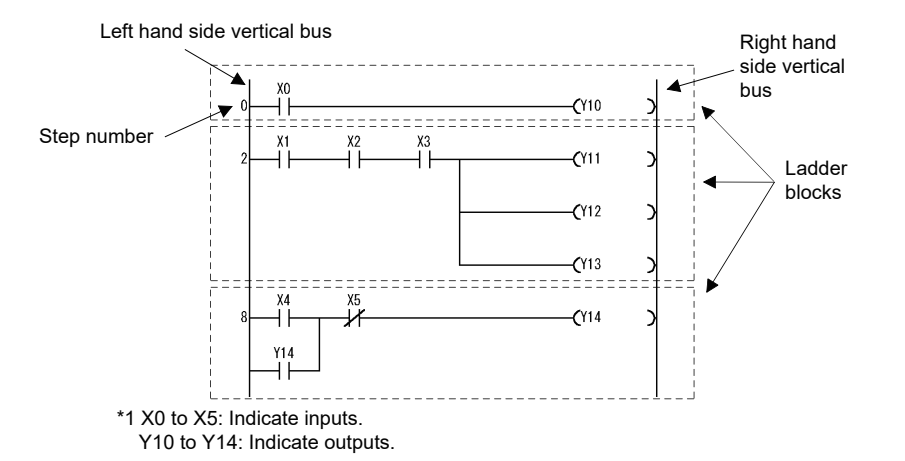

◆ Sequence program operation method

The sequence program is operated repeatedly from the ladder block at step 0 through the END instruction.

A ladder block is operated from the left vertical rail to the right vertical rail and from top down.

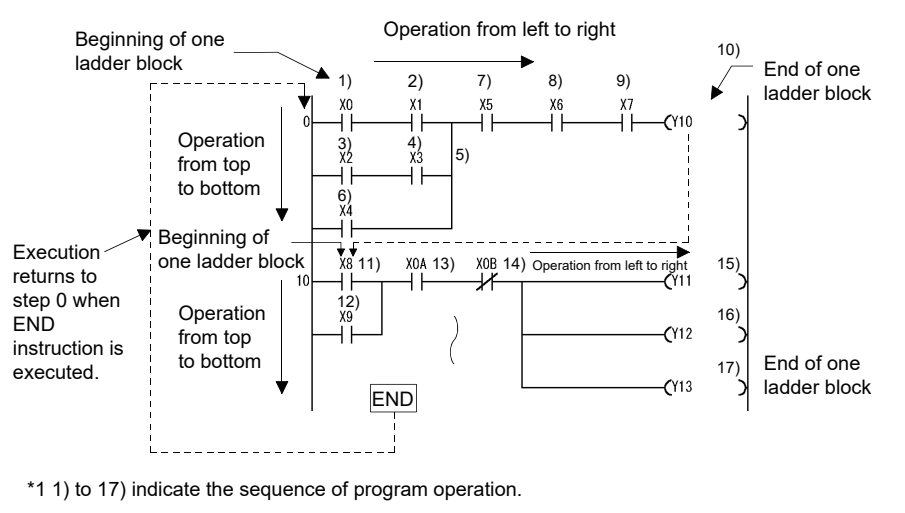

3.4.2 Function block (FB)

A function block (FB) is a repeatedly used ladder blocks that is treated as a component so that it can also be used in other sequence programs.

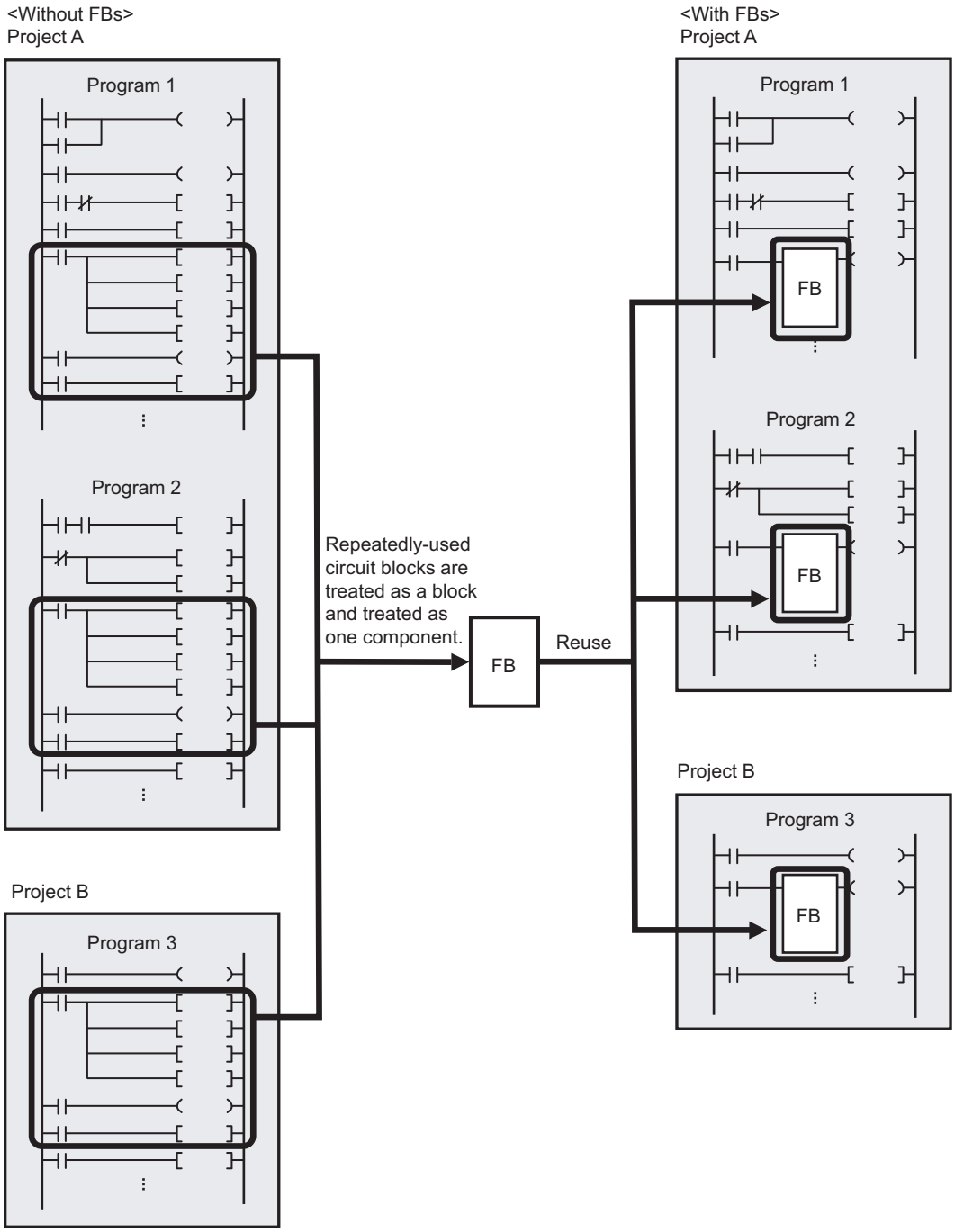

3.5 Operation processing method of the PLC function

The PLC function uses the repetitive operation method of stored programs.

◆ Stored program method

- The stored program method stores a sequence program to be operated in the internal memory in advance.
- At execution of the sequence program, the sequence program stored in the PLC function is read to the CPU by each instruction in order to execute operations, and that result is used to control each device status.

◆ Repetitive operation method

The repetitive operation method executes a sequence of operations repeatedly.

The PLC function executes the following process repeatedly.

- The PLC function executes a sequence program stored in the internal memory in sequence from step 0.
- The PLC function performs internal processing such as updating timers/counters to the present values and performing self-diagnostic checks after executing the END instruction, and returns to step 0 in the sequence program.

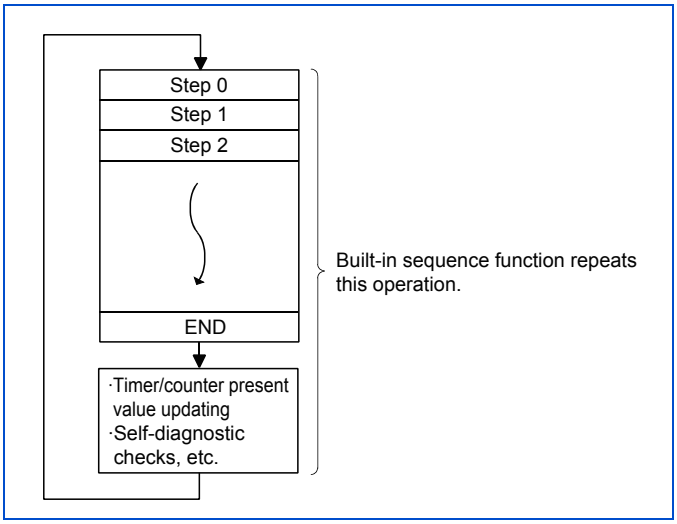

NOTE

- Processing from step 0 to the next step 0 or END to the next END is called a scan. Therefore, a single scan time is the total time to process a user-created program (step 0 through END) and the time for internal processing of the PLC function.

3.6 I/O processing method

The control method is a refresh method.

3.6.1 Refresh method

The refresh method stores changes in the control input terminals to the CPU input data memory in batch before every scan is executed and uses the data stored in this input data memory for operation execution.
Program operation results of the output (Y) are output to the output data memory every time, and contents stored in the output data memory are output in batch from the control output terminals after the END instruction is executed.

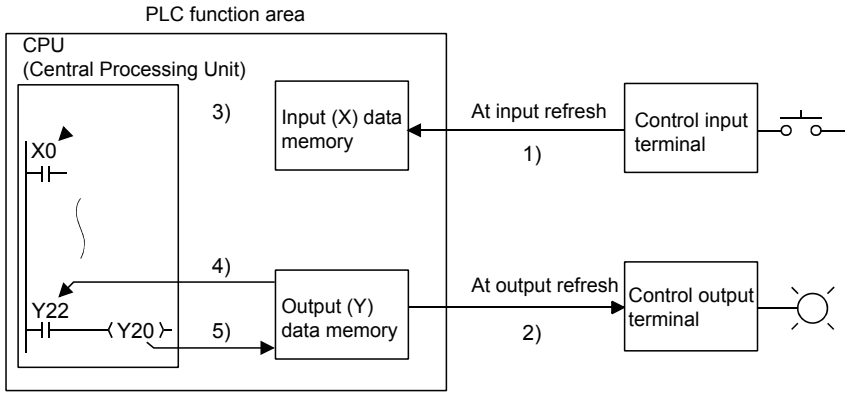

• Input refresh
Input information is read 1) in batch from the PLC function area and stored in the input data memory (X) before executing step 0.
• Output refresh
Output information 2) stored in the output data memory (Y) is output in batch to the PLC function area before executing step 0.
• When executing a contact instruction for the input
Input information is read 3) from the input data memory (X) to execute a sequence program.
• When executing a contact instruction for the output
Output information is read 4) from the output data memory (Y) to execute a sequence program.
• When executing an OUT instruction for the output
Operation result of the sequence program 5) is stored in the output data memory (Y).

3.6.2 Response delay in refresh mode

The following description is about the output delay for the varied inputs.
As shown in the figures below, change in the output lags behind that in the input by up to two scans.

Ladder example

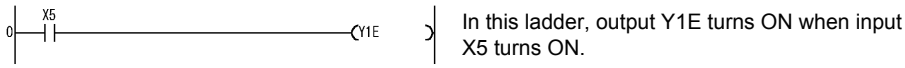

◆ When Y1E turns ON at the earliest timing

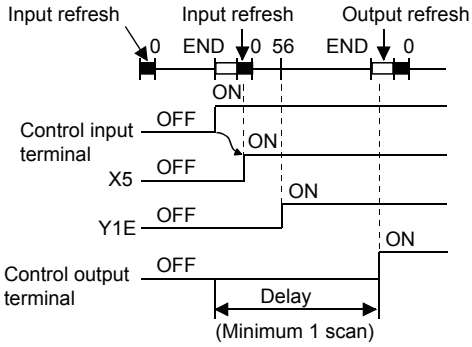

The Y1E output turns ON at the earliest timing when the control input terminal turns ON immediately before the refresh. In this case, X5 turns ON at input refresh, Y1E turns ON at step 0, and then the control output terminal turns ON at output refresh after END instruction execution.
Therefore, change in the control output terminal occurs one scan behind that in the control input terminal.

◆ When Y1E turns ON at the latest timing

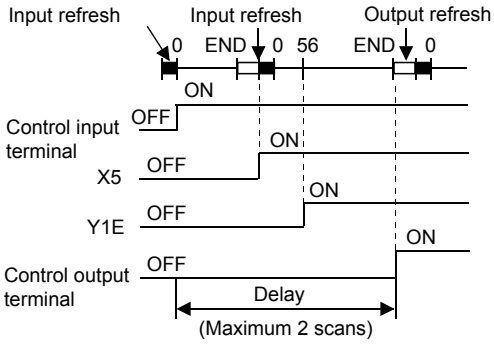

The Y1E output turns ON at the latest timing when the control input terminal turns ON immediately after the refresh. In this case, X5 turns ON at the next input refresh, Y1E turns ON at step 0, and then the control output terminal turns ON at the output refresh after END instruction execution.
Therefore, change in the control output terminal occurs two scans behind that in the control input terminal.

3.7 Scan time

◆ Scan time

Scan time is the time period from operation execution of a sequence program from step 0 until executing the next step 0.
The scan time is not constant in every scan but differs according to whether instructions used are executed or not.

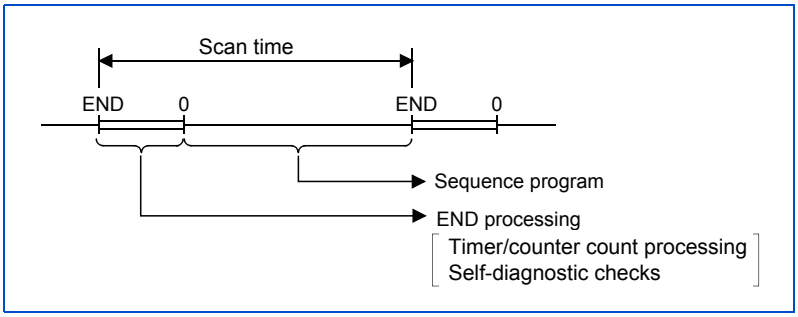

◆ Scan time check

The scan time from the END instruction to the next END instruction is measured inside the programmable controller and stored in special registers SD520 (SD521), SD524 (SD525), and SD526 (SD527).

Device number	Name	Description
SD520	Current scan time	The scan time is stored at every END and is constantly updated. SD520: Stores the ms places (Stored range: 0 to 65535) SD521: Stores the μs places (Stored range: 0 to 900)
SD521		
SD524	Minimum scan time	The minimum scan time is stored at every END. SD524: Stores the ms places (Stored range: 0 to 65535) SD525: Stores the μs places (Stored range: 0 to 900)
SD525		
SD526	Maximum scan time	The maximum scan time is stored at every END. SD526: Stores the ms places (Stored range: 0 to 65535) SD527: Stores the μs places (Stored range: 0 to 900)
SD527		

- Scan time accuracy

The accuracy of the scan time observed inside the programmable controller is ±2 ms.
For example, the actual scan time is within the range of 3 ms to 7 ms when data stored in SD520 is 5.

3.8 Values that can be used in sequence programs

For the PLC function, data such as values and alphabetical characters are represented in two statuses, 0 (OFF) and 1 (ON).
Data represented with 0 and 1 is called BIN (binary).
The PLC function can also use HEX (hexadecimal), which represents four bits of BIN data together.
The following table shows the numeric representations in BIN (binary), HEX (hexadecimal), and DEC (decimal).

DEC (decimal)	HEX (hexadecimal)	BIN (binary)
0	0	0
1	1	1
2	2	10
3	3	11
.	.	.
.	.	.
.	.	.
.	.	.
.	.	.
.	.	.
9	9	1001
10	A	1010
11	B	1011
12	C	1100
13	D	1101
14	E	1110
15	F	1111
16	10	10000
17	11	10001
.	.	.
.	.	.
.	.	.
.	.	.
.	.	.
.	.	.
47	2F	101111

3.8.1 BIN (binary)

◆ Binary

BIN represents a value with 0 (OFF) and 1 (ON).
In decimal notation, when a value increases from 0 to 9, a carry occurs and the next value becomes 10.
In BIN (binary) notation, a carry is generated after 0 and 1, and the next value becomes 10 (2 in decimal notation). Then, a next carry is generated after 10 and 11, and the next value becomes 100 (4 in decimal notation).

◆ Numeric representation in BIN (binary)

Each register (such as a data register) used for the PLC function consists of 16 bits.

- Most significant bit is 0 ... Positive
- Most significant bit is 1 ... Negative

The following figure shows the numeric representation of each register used for the PLC function.

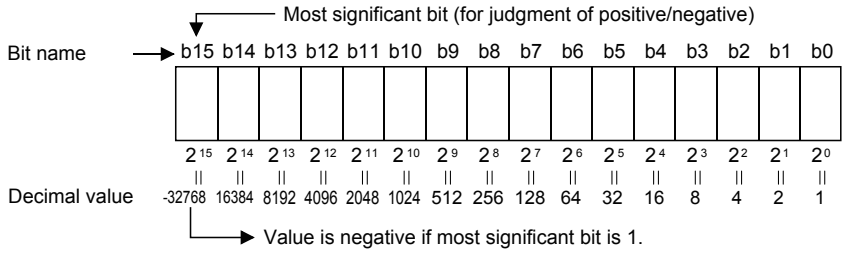

Numerical data that can be used for the PLC function

In the numeric representation shown in the figure above, values can be represented in the range from -32768 to 32767.

Therefore, each register used for the PLC function can store a value between -32768 and 32767.

3.8.2 HEX (hexadecimal)

◆ HEX

HEX represents four bits of binary data with one digit.

BIN uses 4 bits to represent the 16 values from 0 to 15.

HEX uses the letter A to represent the bit next to 9 (10) and B to represent 11, and then a carry occurs after F (15).

For the numeric representations of BIN, HEX, and DEC, refer to page 103.

◆ Numeric representation in HEX

Each register (such as a data register) used for the PLC function consists of 16 bits.

Therefore, the value that can be stored in each register can be represented in the range from 0 to HFFFF in HEX.

3.9 Explanation of devices

3.9.1 Device list

The following list shows device names and ranges that can be used for the PLC function. Specifications in the following table may not be supported depending on the date of manufacture of the inverter. For details on applicable specifications, refer to page 8.

◆ FR-A800, FR-A800 Plus and FR-F800 series

Classification	Category	Device name	Number of points	Range of use	
Internal user device	Bit device	Input (X)	144 points	X0 to X8F	HEX
		Output (Y)	144 points	Y0 to Y8F	HEX
		Internal relay (M)	128 points	M0 to M127	DEC
		Latch relay (L)	—	— (Can be set with PLC function parameters but will not latch)	—
	• Bit device (contact/coil) • Word device (present value)	Timer (T)	16 points, 32 points	T0 to T15/T0 to T31 100 ms timer: 0.1 to 3276.7 s can be set 10 ms timer: 0.01 to 327.67 s can be set	DEC
		Retentive timer (ST)	16 points, 32 points	ST0 to ST15/ST0 to ST31 100 ms retentive timer: 0.1 to 3276.7 s can be set 10 ms retentive timer: 0.01 to 327.67 s can be set	DEC
		Counter (C)	16 points, 32 points	C0 to C15/C0 to C31 Normal counter: Setting range 1 to 32767 Interrupt program counter: Not used	DEC
	Word device	Data register (D)	256 points	D0 to D255	DEC
Internal system device	Bit device	Special relay (SM)	2048 points	SM0 to SM2047 (with limited functions)	DEC
	Word device	Special register (SD)	2048 points	SD0 to SD2047 (with limited functions)	DEC

◆ FR-E800 series

Classification	Category	Device name	Number of points	Range of use	
Internal user device	Bit device	Input (X)	144 points	X0 to X8F	HEX
		Output (Y)	144 points	Y0 to Y8F	HEX
		Internal relay (M)	128 points	M0 to M127	DEC
		Latch relay (L)	—	— (Can be set with PLC function parameters but will not latch)	—
	• Bit device (contact/coil) • Word device (present value)	Timer (T)	16 points	T0 to T15 100 ms timer: 0.1 to 3276.7 s can be set 10 ms timer: 0.01 to 327.67 s can be set	DEC
		Retentive timer (ST)	16 points	100 ms retentive timer: 0.1 to 3276.7 s can be set 10 ms retentive timer: 0.01 to 327.67 s can be set	DEC
		Counter (C)	16 points	C0 to C15 Normal counter: Setting range 1 to 32767 Interrupt program counter: Not used	DEC
	Word device	Data register (D)	256 points	D0 to D255	DEC
	Pointer device	Pointer (P)	256 points	P0 to P127, P2048 to P2175 (All are common pointers.)*1	DEC
Internal system device	Bit device	Special relay (SM)	2048 points	SM0 to SM2047 (with limited functions)	DEC
	Word device	Special register (SD)	2048 points	SD0 to SD2047 (with limited functions)	DEC

*1 P2048 to P2175 are used for automatic assignment. For details of automatic assignment, refer to GX Works2 Operating Manual (Simple Project).

3.9.2 I/O X and Y

The input and output are devices that are used for communication between the inverter and external devices.
The input is given ON/OFF information externally to the control input terminals. Information is used as contacts (NO contact and NC contact) and source data of basic instructions in programs. On the other hand, the output is used to output program operation results from the control output terminals.

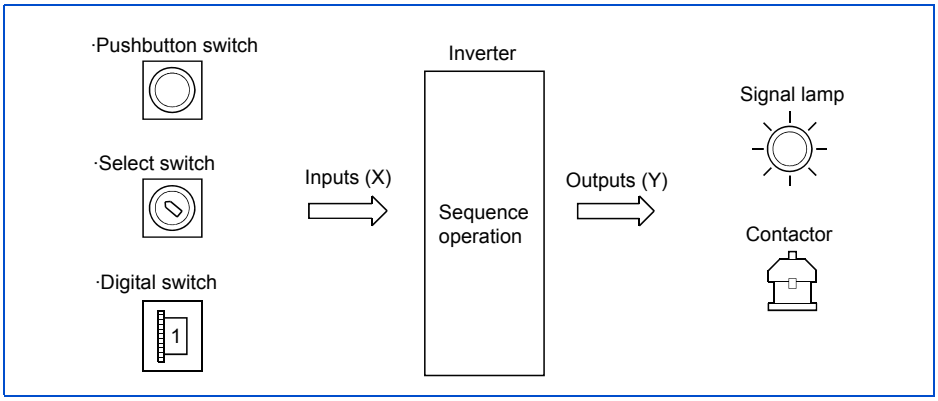

◆ Input X

- The input allows external devices, such as push-button switches, selection switches, limit switches, and digital switches, to give commands and data to the inverter (PLC function).
- Assuming that the PLC function has internal virtual relays (Xn), the NO contacts and NC contacts of those Xn are used in programs.

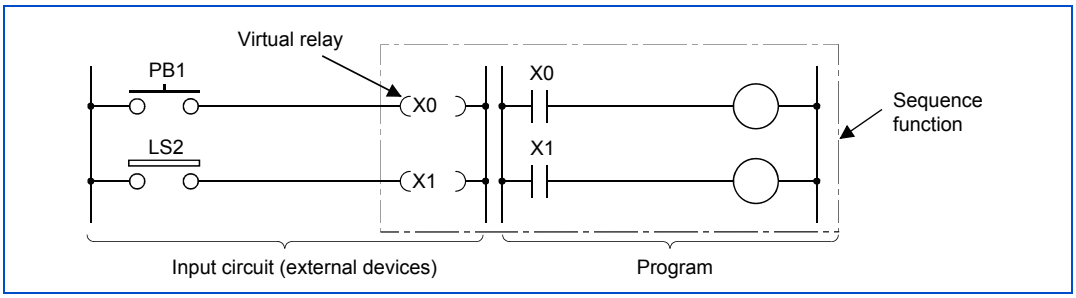

- There is no limit on the number of NO contacts and NC contacts of Xn used in a program.

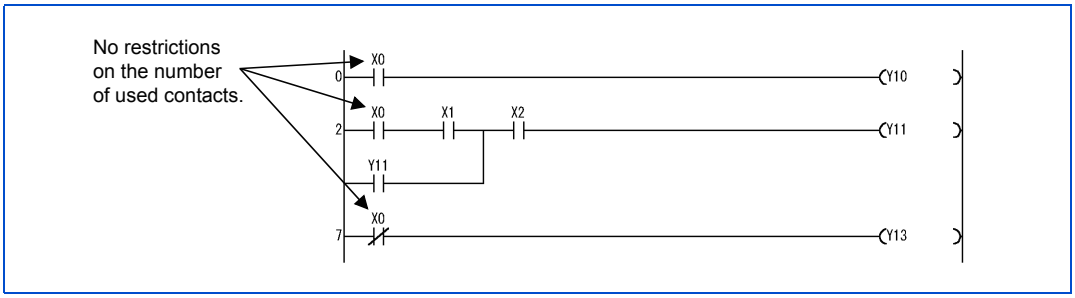

When the inverter is used without connecting any external device to the control input terminal, "X" can be substituted for internal relay "M".

◆ Output Y

- The output performs output of program control results to external devices (signal lights, digital Human Machine Interfaces (HMI), electromagnetic switches (such as contactors and solenoids)).
- Output information can be output through a single NO contact or an equivalent device.
- There is no limit on the number of NO contacts and NC contacts of output Yn used in a program as long as it is within the range of the program capacity.

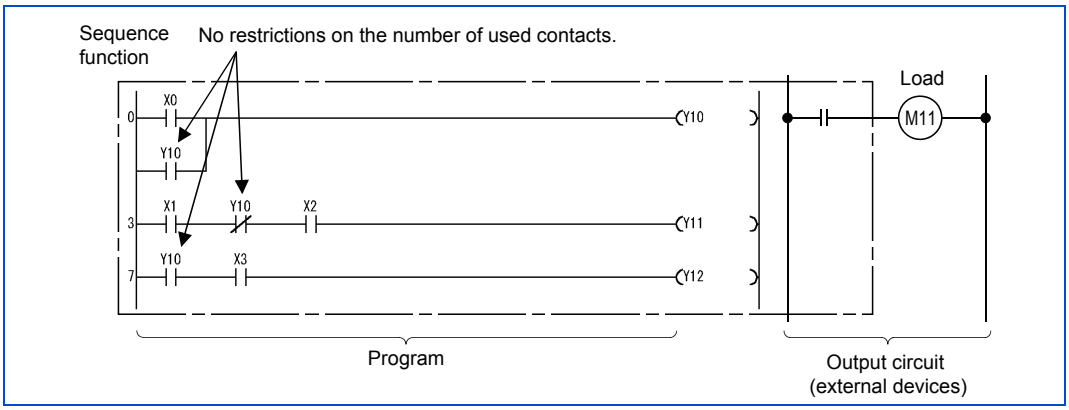

When the inverter is used without connecting the control input terminals to external devices, "Y" can be substituted for internal relay "M".

3.9.3 Internal relay M

Internal relays are auxiliary relays that are used in the PLC function internally. These relays cannot latch (power failure retention).

Performing any of the following turns all internal relays OFF.

- When the power supply was turned ON
- When resetting

There is no limit on the number of contacts (NO contact and NC contact) to be used in a program.

Use the output (Y) to output sequence program operation results.

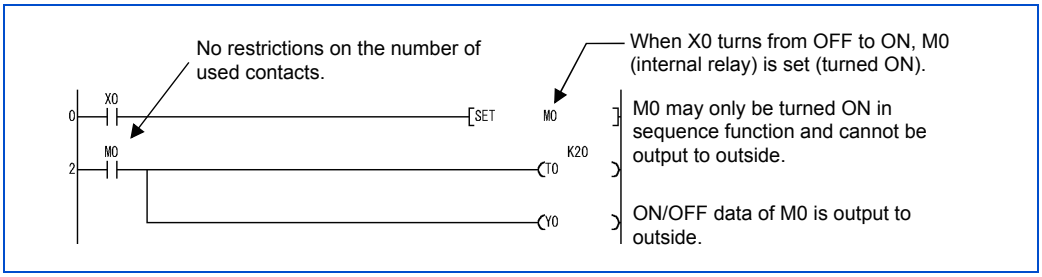

3.9.4 Timer T

The PLC function uses up-timing timers.

The up-timing timer starts measuring a present value when the timer's coil turns ON, and then the timer's contact turns ON when the present value reaches a setting value.

NOTE

- Sequence programs that use the devices T16 to T31 are available for applicable inverters that support 32-point devices. (Refer to page 8)
  When such a program is written to the inverter that supports up to 16-point devices, an internal fault of the sequence program "INSTRCT.CODE ERR" will occur. In this case, the "P.RUN" indicator blinks on the operation panel display and the sequence program will not be executed.

◆ 100 ms timer and 10 ms timer

The timer starts measuring a present value when the timer's coil turns ON, and then the present value returns to 0 and the timer's contact turns OFF when the coil turns OFF.

Ladder example

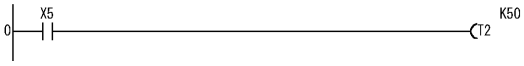

When input X5 turns ON, T2 coil turns ON and timer times 5s. (T2 is 100ms timer.)

Timing diagram

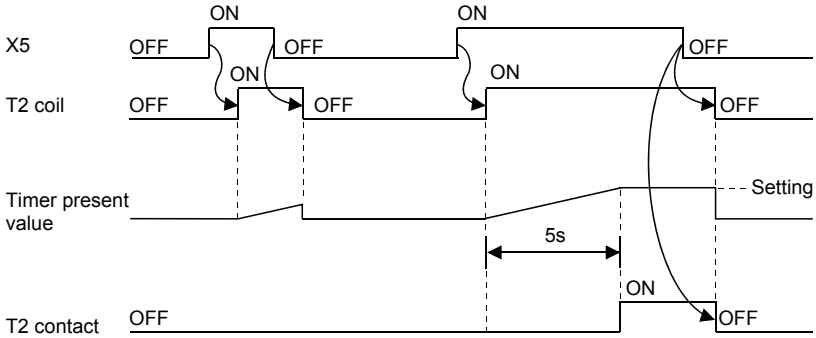

3.9.5 Retentive timer ST

NOTE

- Sequence programs that use the devices ST16 to ST31 are available for applicable inverters that support 32-point devices. (Refer to page 8)
  When such a program is written to the inverter that supports up to 16-point devices, an internal fault of the sequence program "INSTRCT.CODE ERR" will occur. In this case, the "P.RUN" indicator blinks on the operation panel display and the sequence program will not be executed.

◆ 100 ms retentive timer

- The 100 ms retentive timer is a timer that measures the time period during which its coil is ON. It starts measuring a present value when its coil turns ON and retains the present value and its contact ON/OFF status even when the coil turns OFF. It resumes measurement from the retained present value when the coil turns ON again.
- Use the RST ST□ instruction to clear the present value and turn OFF the contact.
- The retentive timer value is not kept and reset to zero after PLC power OFF.

Ladder example

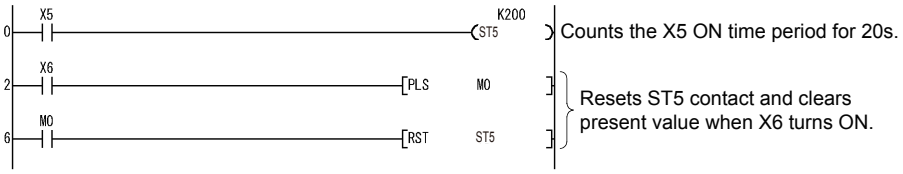

Timing diagram

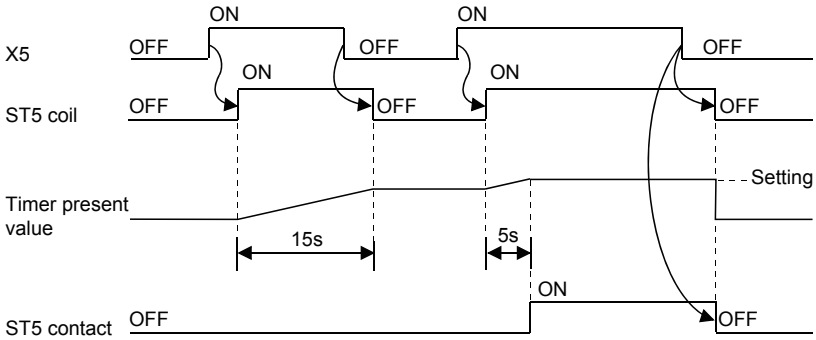

3.9.6 Processing and accuracy of timers

◆ Processing

When the OUT T□ instruction is executed, the ON/OFF switching of the timer coil, current value update, and ON/OFF switching of the contact are performed. In the END processing, the current timer value is not updated and the contact is not turned ON/OFF.

[Program example]

[Processing at execution of OUT T0 instruction]

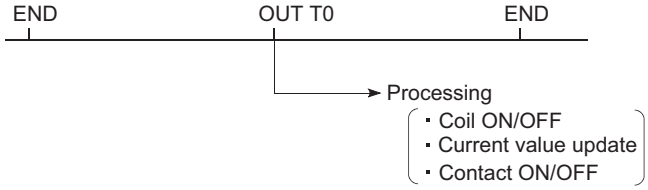

◆ Accuracy

The value obtained by the END instruction is added to the current value when the OUT T□ instruction is executed. The current value is not updated while the timer coil is OFF even if the OUT T□ instruction is executed.

Timer limit setting=10ms, Setting value of T0=8 (10ms×8=80ms), Scan time=25ms

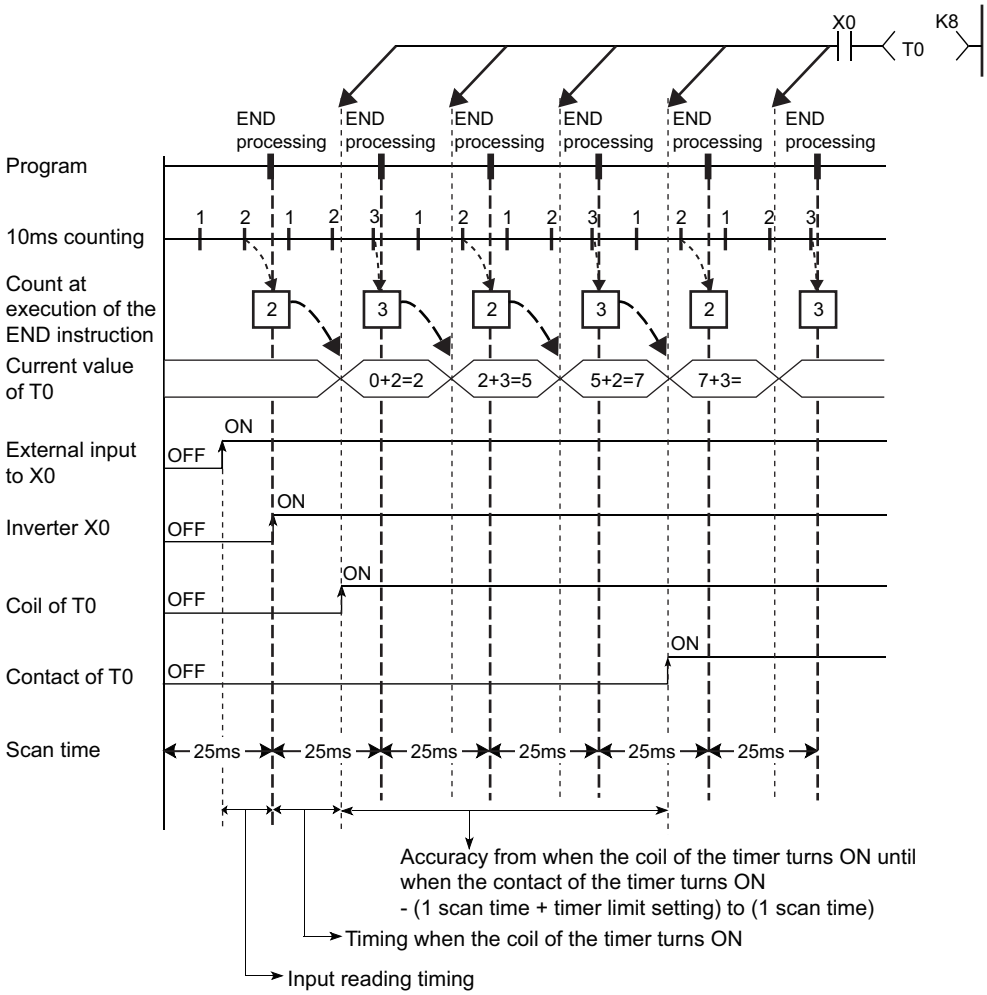

Accuracy of the timer response that is from reading input (X) to output the data are up to "2-scan time + timer limit setting".

3.10 Counter C

The PLC function uses up-timing counters.
The up-timing counter turns its contact ON when the count value reaches a setting value.

NOTE

- Sequence programs that use the devices C16 to C31 are available for applicable inverters that support 32-point devices. (Refer to page 8)
  When such a program is written to the inverter that supports up to 16-point devices, an internal fault of the sequence program "INSTRCT.CODE ERR" will occur. In this case, the "P.RUN" indicator blinks on the operation panel display and the sequence program will not be executed.

◆ Count processing

- The counter's coil turns ON/OFF at execution of the OUT C□ instruction, and then the counter's present value is updated and its contact turns ON after the END instruction is executed.
- The counter detects the coil's rise (OFF→ON) and then starts counting. Therefore, it will not start counting if the coil remains ON.

◆ Counter reset

- The count value is not cleared even when the coil turns OFF. Use the RST C□ instruction to clear the count value and turn the contact OFF.
- If the counter is reset with the RST instruction, the counter's present value and contact are cleared at execution of the RST instruction.

Ladder example

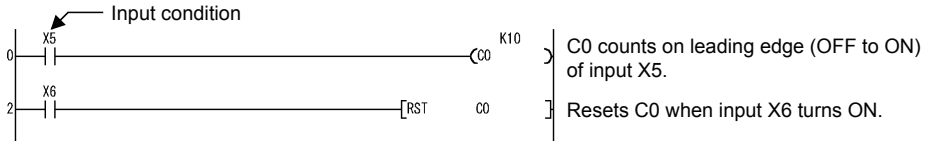

3.10.1 Count process in refresh mode

The counter counts at the rise of the counter's input conditions stored at input refresh.

Ladder example

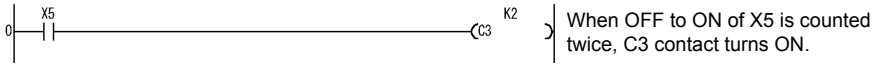

Counting method

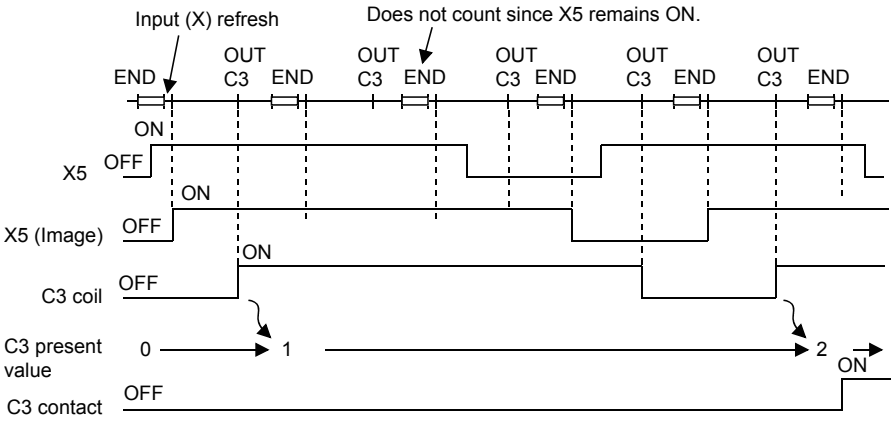

NOTE

- For the maximum counting speed of the counter, refer to page 113.

3.10.2 Maximum counting speed of counter

The maximum counting speed of the counter is determined by scan time, and counting is possible only when the ON/OFF time specified in the input conditions is longer than the scan time.

$$\text{Maximum counting speed Cmax} = \frac{n}{100} \times \frac{1}{ts} \text{ [times/s]}$$

n: Duty (%)
ts: Scan time [s]

NOTE

- Duty n is a ratio between the ON and OFF time of count input signals and is represented as a percentage (%).

When T1≦T2 $n = \frac{T1}{T1 + T2} \times 100[\%]$

When T1>T2 $n = \frac{T2}{T1 + T2} \times 100[\%]$

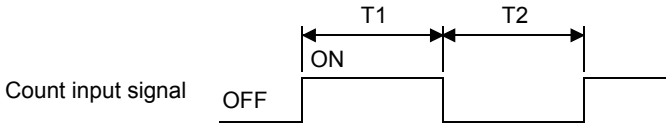

3.11 Data register D

- Data registers are memories that can store numerical data (from -32768 to 32767 or from H0000 to HFFFF) within the PLC function. Each data register consists of 16 bits; therefore, data can be read and written in 16-bit increments.

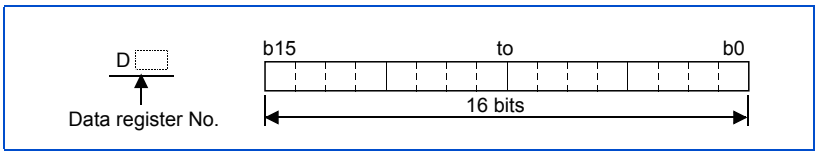

- Data stored during execution of a sequence program is retained until overwritten with new data.
- Unused timers (T) and counters (C) can be substituted for data registers if the number of data registers is insufficient.

3.12 Special relays and special registers

Special relays and special registers are internal relays and data registers, respectively, whose applications are already determined in the PLC function.
The following are the main applications of special relays and special registers.

◆ Sequence operation check

The following special relays and special registers can be used for checking sequence program operations.

- Operating status (RUN/STOP) check
- Error detection through self-diagnostic function
- Operation error detection
- Scan time check

◆ Timing contact

The following items are special relays with different operating statuses that can be used for sequence programs.

- Always ON/OFF flag
- RUN flag (OFF for one scan)
- Initial processing flag (ON for one scan)

NOTE

- For special relays and special registers that can be used in the PLC function, refer to page 22.

Item	Special relay number	Application/description
Diagnostic error	SM0	Turned ON when a diagnostic error has been detected. ON status is retained even after the condition becomes normal.
Self-diagnostic error	SM1	Turned ON when an error is detected by self-diagnosis. ON status is retained even after the condition becomes normal
Common error information	SM5	When SM5 is turned ON, common error information (SD5 to SD15) is stored.
Individual error information	SM16	When SM16 is turned ON, error individual information (SD16 to SD26) is stored.
Operation error flag	SM56	Turned ON when an operation error is detected during instruction execution. ON status is retained even after the condition becomes normal.
Clock data read request	SM213	Clock data is read in BCD value to SD210 to SD213 when this relay is turned ON. The process is not executed when the relay is OFF.
Always ON	SM400	SM400 and SM401 are respectively turned ON and OFF regardless of the STOP and RUN states.
Always OFF	SM401	
ON only for one scan after RUN	SM402	SM402 and SM403 change depending on the STOP and RUN states. In the cases other than STOP: SM402 is ON only for one scan. SM403 is OFF only for one scan.
OFF only for one scan after RUN	SM403	

3.13 Function list

Function	Description
Remote RUN/STOP	This function executes remote RUN/STOP from an external source when the SQ signal is ON (PLC function RUN state (P.RUN is ON)).
Watchdog timer variable (10 to 2000 ms)	This is a PLC function internal timer for detecting errors in the hardware or programs. Its setting value can be changed.
Self-diagnostic function	This function diagnoses the presence of an error within the PLC function itself, and performs error detection, display and stoppage of the PLC function.
Output settings for STOP→RUN	The output (Y) status when the state changes from the STOP state to the RUN state.
Keyword registration	This setting prevents reading/writing of programs (parameter and main/sub programs) and comments.

NOTE

- The following functions cannot be used.

Constant scan, latch (retention at power failure), PAUSE, status latch, sampling trace, step operation, clock, interrupt processing, comment, microcomputer mode, print title entry, annunciator display mode, ERROR LED priority settings.

3.14 RUN/STOP method of PLC function from an external source (remote RUN/STOP)

The PLC function RUN/STOP is executed by ON/OFF of the SQ signal.
Remote RUN/STOP is performed by RUN/STOP of the PLC function from an external source when the SQ signal remains in the ON state (RUN state).

◆ Application of remote RUN/STOP

Remote RUN/STOP can be performed by remote control using remote RUN/STOP in the following types of cases.

- When the inverter is out of reach
- When executing RUN/STOP for the inverter in an enclosure from an external source

◆ Operation at remote RUN/STOP

The operations of the sequence program that performs remote RUN/STOP are as follows.

- Remote STOP: The sequence program is executed up to the END instruction, and enters the STOP state.
- Remote RUN: If remote RUN is executed when the inverter has been switched to the "STOP state" by remote STOP, the state changes to RUN state again, and the sequence program is executed from step 0.

◆ Remote RUN/STOP method

The following methods can be used for remote RUN/STOP.

- Setting using the PLC function parameters (by contact)

Remote RUN/STOP can be executed by turning the remote RUN contact OFF/ON.
For example, this can be used to STOP the PLC function at the emergency stop contact.
(The state is "RUN" when the remote RUN contact is OFF, and "STOP" when the remote RUN contact is ON.)

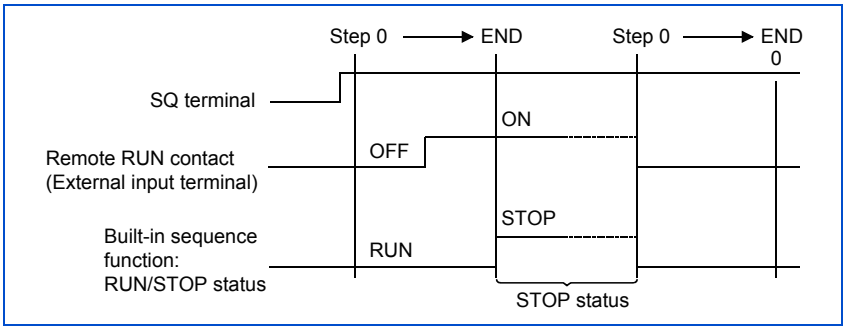

Point

• PLC function parameter settings for the remote RUN contact
X0 to X8F can be set for the remote RUN contact.
(For details, refer to the Instruction Manual of FR Configurator2)

- Using FR Configurator2 (Developer)

RUN/STOP can be performed by operating remote RUN/STOP from FR Configurator2 (Developer).

For example, this can be used to STOP the inverter in order to rewrite the sequence program when it is installed in an out of reach location.

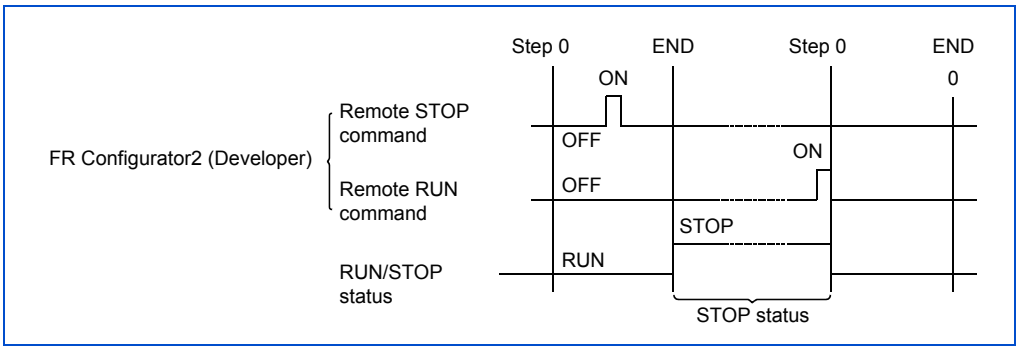

◆ Note

Note the following points because the PLC function has priority on STOP.

- The PLC function switches to the STOP state when remote STOP is executed from any source such as the remote RUN contact or FR Configurator2 (Developer), etc.
- After switching the PLC function to the STOP state with remote STOP, all external factors (remote RUN contact, FR Configurator2 (Developer), etc.) that executed the remote STOP must be RUN in order to switch the PLC function back to the RUN state.

NOTE

- In the RUN state, the sequence program step 0 to the END instruction are executed repeatedly. In the STOP state, all sequence program operations are stopped, and all outputs (Y) are OFF.

3.15 Watchdog timer (watchdog error supervision timer)

◆ Watchdog timer

The watchdog timer is a PLC function internal timer for detecting errors in the hardware or sequence program. Use FR Configurator2 (Developer). Select the [PC parameter] window, [PC RAS setting] tab, and set the watchdog timer.

PLC function parameter	Name	Initial value	Setting range	Minimum setting increments
PLC RAS setting	WDT (Watchdog timer) setting	200ms	10 to 2000 ms	10ms

◆ Watchdog timer reset

The PLC function resets the watchdog timer before step 0 is executed (after the END processing is executed).

When the PLC function operates normally and the END instruction is executed by the sequence program within the setting value, the watchdog timer does not output the signal.

When a PLC function hardware failure occurs or if the END instruction of the scan time could not be executed well within the setting value, the watchdog timer outputs the signal.

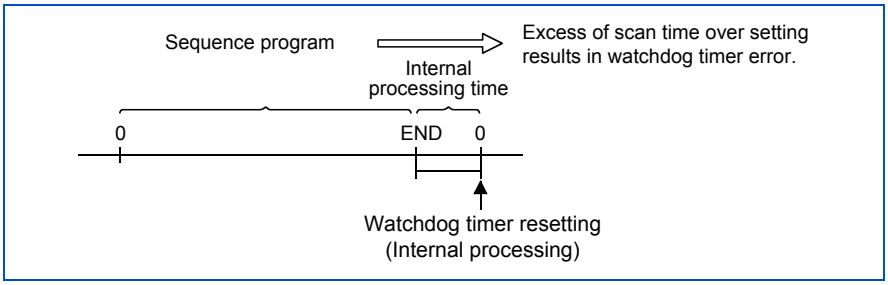

◆ Process when the watchdog timer reaches the setting value

If the scan time exceeds the setting value of the watchdog timer, a watchdog timer error occurs and the PLC function is as follows.

- All outputs of the PLC function turn OFF.
- The P.RUN LED blinks.
- SM1 turns ON, and an error code is stored in SD0. (Refer to page 46.)

3.16 Self-diagnostic function

The self-diagnostic function diagnoses the presence of an error within the PLC function itself.

◆ Self-diagnostic timing

The self-diagnostic is executed at power-on, at reset, when each instruction is executed and when the END instruction is executed.

- At power-on, at reset.

Diagnoses whether the operation can be executed.

- When each instruction is executed

An error occurs if the operation of each instruction of the sequence program could not be executed.

- When the END instruction is executed

Watchdog error supervision is performed.

◆ Operation mode when an error is detected

There are two types of PLC function operations for when an error is detected by self-diagnosis; the operation stops or operation continues.

Even if the operation is set to continue, some errors can cause operation stop with the PLC function settings. (Refer to page 120.)

- If an operation-stop error is detected by the self diagnosis, the operation is stopped as soon as the error is detected. (Note that other devices do not hold the status before an error occurs.)
- If an operation-continued error is detected, the faulty program area is skipped, and the operation continues from the next step.

◆ Confirmation of fault record

When an operation error occurs, SM0 (self-diagnosis error) turns ON and an error code is stored in SD0 (self-diagnosis error). Particularly when the operation is set to be continued, use in the program and to prevent a malfunction in the machine system. For details on the fault record detected by self-diagnosis, refer to the error code list on page 224.

3.16.1 Operation mode when there is an operation error

The PLC function can be set to either stop or continue operation of the sequence program when an operation error occurs. The setting of whether to stop or continue operation is set in the PLC function parameters.

- The initial status of the operation mode and PLC function status when there is an operation error are as shown in the following table.

Error definition		PLC function status				P.RUN LED
		Operation Initial status	Special relay turned ON	Special register for data storage	Self-diagnostic error number (SD0)	
Operation error	An error such as an attempting BCD conversion on a value that exceeds 0 to 9999 (or 0 to 99999999) occurred in the sequence program.	Continue	SM0	SD0	50	ON

3.17 Registering file password

This function sets write password and read password for each file stored in the inverter so that files are protected against tampering and theft by unauthorized persons. To set up a file password, select [Online] of FR Configurator2 (Developer), [Password/key word], and then [Registration/change].

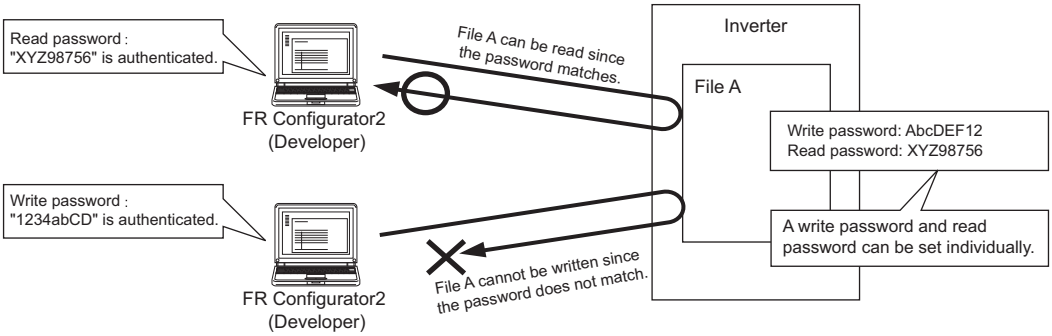

◆ File protection timing

File protection is enabled immediately after the passwords are registered, and it is disabled immediately after the passwords are deleted.

◆ Password target files

A password can be set to the following files.

- Program
- Device comment
- Initial device value
- Parameter
- Source information

◆ Operations that are controlled and the number of characters

A password can be set to the following operations. A password can be 4 to 32 alphanumeric characters (capital or lowercase letters).

- Reading files
- Writing files
- Reading/writing files

◆ Online operations that require password authentication

Authentication is required to execute the following operations to password-protected files.

- Write to PLC (data writing)
- Read from PLC (data reading)
- Online change (data writing)
- Change TC setting value (data writing)
- Verify with PLC (data reading)
- Create/Change or Delete of a password (data reading and writing)
- Delete PLC data (data writing)

NOTE

- For the procedure and precaution on the password change, cancellation, and unlock, refer to the GX Works2 Version1 Operating Manual (Common).
- Even when the password function **(Pr.296, Pr.297)** is enabled, FR Configurator2 can be used to read/write the inverter parameter settings.
- The purpose of the file password is different from that of the inverter password function **(Pr.296, Pr.297)**.
- If the password has been forgotten, clear the flash memory. However, doing so will also clear the PLC function programs and the parameters for the PLC function. (Refer to page 71.)

3.18 Output (Y) status settings when STOP status → RUN status

When changing from a state such as the RUN state to the STOP state, the RUN state output (Y) is stored in the PLC function. When changing from the STOP state to the RUN state, the PLC function parameter settings can be configured to either re-output the output (Y) or to output after operation execution.

"Output the output (Y) status before STOP"
After outputting the output (Y) status directly before the STOP state, the sequence program operation is executed.
"Clear the output (Y) (output after 1 scan)"
After clearing all outputs (Y) and executing the sequence program operation, the output (Y) is output.

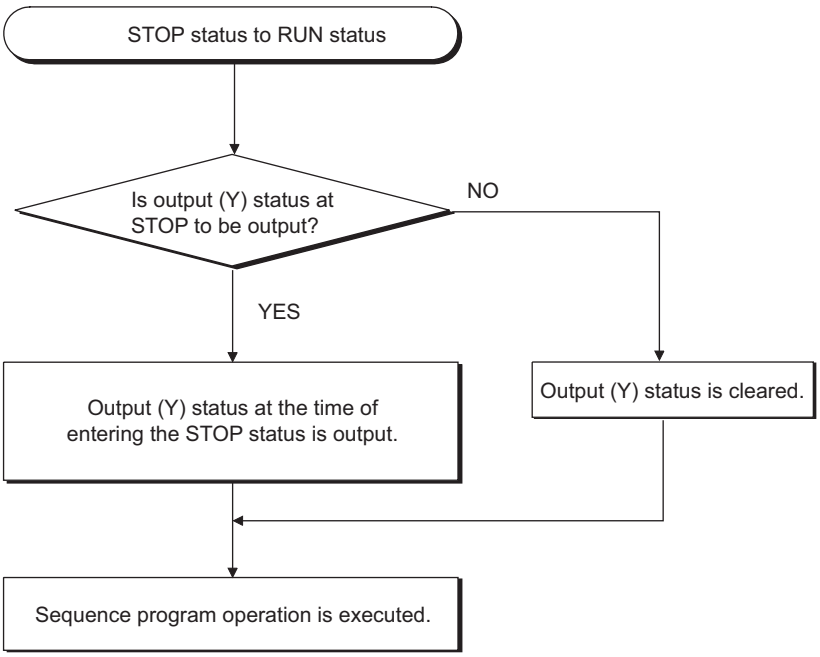

3.19 Structure of instructions

Most of the instructions can be divided between the instruction section and device, and the applications are as follows.

- Instruction section

Indicates the functions of the instruction.

- Device

Indicates the data used by the instruction.

The structure of instructions based on a combination of the instruction section and device can be broadly divided into the following categories.

- Instruction section

Instructions that do not change the device status, and mainly perform program controls.

Ex

END

- Instruction section + Device

Controls device ON/OFF, controls the execution condition according to the device ON/OFF status, and performs program branching, etc.

Ex

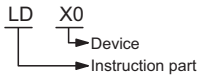

- Instruction section + Source device + Destination device

Performs operation on the destination data and source data, and stores the operation result in the destination.

Ex

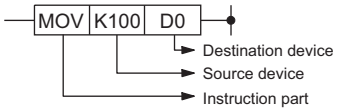

- Others

Combinations other than those above.

◆ Source (S)

A source is the data used in the operation.

It is as shown below depending on the specified device.

- Constant

Specifies the value used in the operation. It is a fixed value that cannot be changed when the program is being executed because it is set when the program is created.

- Bit device, word device

Specifies the device in which the data used in the operation is stored. Therefore, the data needs to be stored in the specified device before the operation is executed. The data used in the instruction can be changed by changing the data stored in the specified device while the program is being executed.

◆ Destination (D)

The data after operation is stored in the destination.

However, when instructions are constructed of a combination of Instruction section + Source device + Destination device , the data to be used in the operation needs to be stored in the destination before the operation.
The device in which data is to be stored must be specified in the destination.

NOTE

- In this manual, the source and destination shall be indicated as the following abbreviations.

Source: Ⓢ, Source 1: Ⓢ1, Source 2: Ⓢ2, Destination: Ⓓ, Destination 1: Ⓓ1

3.20 Bit device processing method

Processing methods available for when a bit device (X, Y, M) is specified are 1-bit processing, and 16-bit and 32-bit processing which are accompanied by digit specification.

3.20.1 1-bit processing

When sequence instructions are used, the device that is the operation processing target is 1 bit (1 point) of the bit device, and multiple bits cannot be specified.

Ex

LD XO, OUT Y20

3.20.2 Digit specification processing

When basic instructions or application instructions are used, there are situations in which the bit device that is the operation processing target needs to be specified with digit specification. When the processing increment of this digit specification is a 16-bit instruction, up to 16 points can be specified in 4-point increments.

◆ 16-bit instruction: K1 to 4 (4 to 16 points)

Ex

Setting range from 16-bit data digit specification of X0 to F

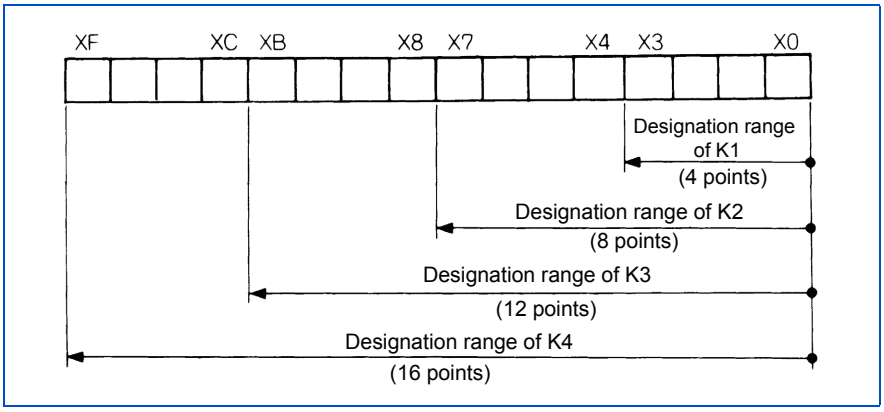

- When there is a digit specification on the source (S) side, the values that can be handled as source data are indicated in the table below.

Specified number of digits	16-bit instruction
K1 (4-point)	0 to 15
K2 (8-point)	0 to 255
K3 (12-point)	0 to 4095
K4 (16-point)	-32768 to 32767

Ladder example	Process
• 16-bit instruction 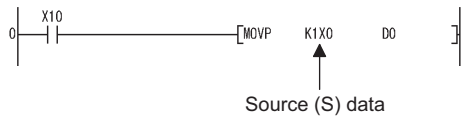 	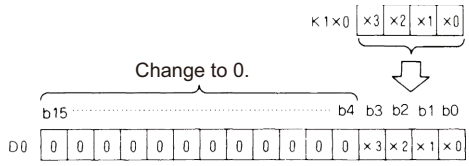

- When there is a digit specification on the destination (D) side, the number of points from the digit specification is applied to the destination side.

Ladder example	Process
• When source (S) data is values 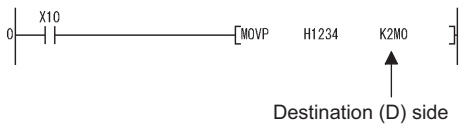	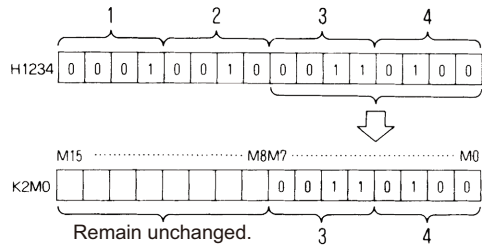
• When source (S) data is a word device 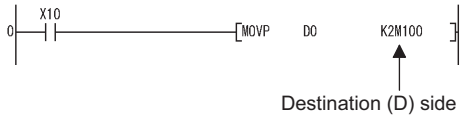	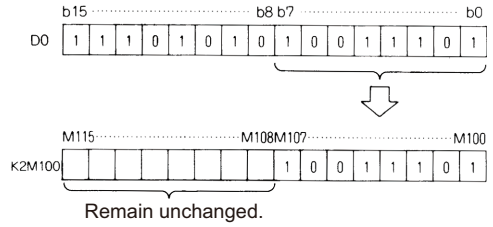

◆ 32-bit instruction: K1 to 8 (4 to 32 points)

Ex

Setting range X0 to 1F by 32-bit data digit specification

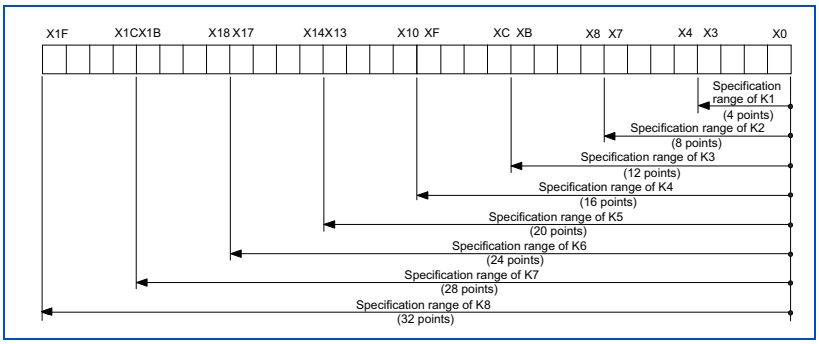

- When there is a digit specification on the source (S) side, the values that can be handled as source data are indicated in the table below.

Specified number of digits	32-bit instruction	Specified number of digits	32-bit instruction
K1 (4-point)	0 to 15	K5 (20-point)	0 to 1048575
K2 (8-point)	0 to 255	K6 (24-point)	0 to 16777215
K3 (12-point)	0 to 4095	K7 (28-point)	0 to 268435455
K4 (16-point)	0 to 65535	K8 (32-point)	-2147483648 to 2147483647

Ladder example	Process
• 32-bit instruction 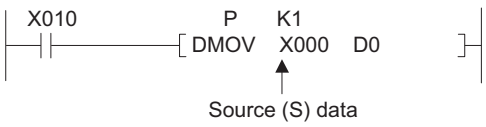	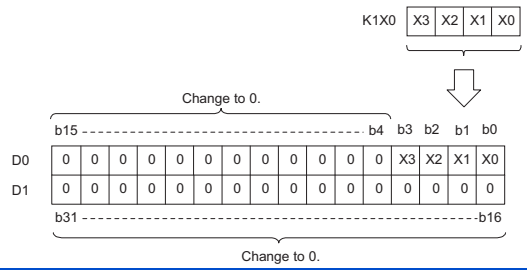

- When there is a digit specification on the destination (D) side, the number of points from the digit specification is applied to the destination side.

Ladder example	Process
• When source (S) data is values 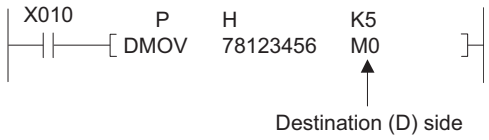 	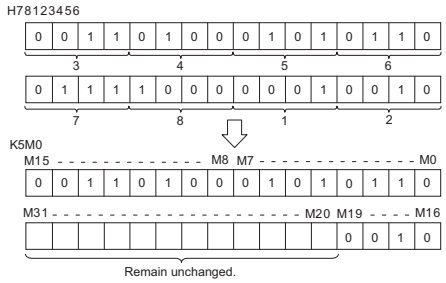
• When source (S) data is a word device 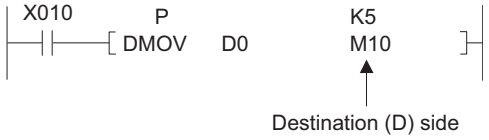 	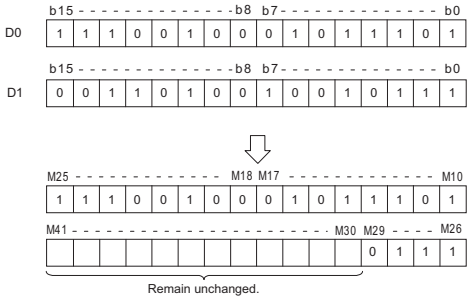

NOTE

- When 32-bit data is stored in word devices, it is stored in two consecutive word devices. An error does not occur even if the stored data exceeds the range of the corresponding device, but the content of devices outside of the range is changed. When storing data, check beforehand that the amount of devices required for storage can be allocated.

3.21 Handling of numerical values

The PLC function has an instruction for handling values indicated in 16 bits and 32 bits.
The most significant bit of the 16 bits and 32 bits is used to judge positive or negative. Therefore, the values that can be handled are as follows.
16-bit: -32768 to 32767
32-bit: -2147483648 to 2147483647

Point

• Value setting method

1) Decimal

10 is stored into D10 in BIN.

-10 is stored into D10 in BIN.

2) Hexadecimal

10 is stored into D10 in hexadecimal.

Decimal and hexadecimal displays are supported as shown below.

• 16 bits

Decimal display	Hexadecimal display
32767	H7FFF
to	to
5	H0005
4	H0004
3	H0003
2	H0002
1	H0001
0	H0000
-1	HFFFF
-2	HFFFE
-3	HFFFD
-4	HFFFC
-5	HFFFB
to	to
-32768	H8000

• 32 bits

Decimal display	Hexadecimal display
2147483647	H7FFFFFFF
to	to
5	H00000005
4	H00000004
3	H00000003
2	H00000002
1	H00000001
0	H00000000
-1	HFFFFFFFF
-2	HFFFFFFFE
-3	HFFFFFFFD
-4	HFFFFFFFC
-5	HFFFFFFFB
to	to
-2147483648	H80000000

3.22 Operation error

An operation error occurs in the basic instruction in the following cases.
When an error listed in the description of each instruction occurs.

Point

- Note that an operation error does not occur when the device specified range exceeds the corresponding device range, and data is written to devices other than the specified device.

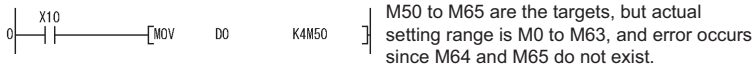

◆ Error processing

If an operation error occurs when a basic instruction is executed, SM0 turns ON and an error code is stored in SD0.
(SM0 remains ON even if subsequent processing is normal.)

- The error code of the instruction in which the operation error occurred when SM0 changed from OFF to ON is stored in SD0. Therefore, the content of SD0 does not change when SM0 remains ON.
- The following type of program resets SD0 and SM0.

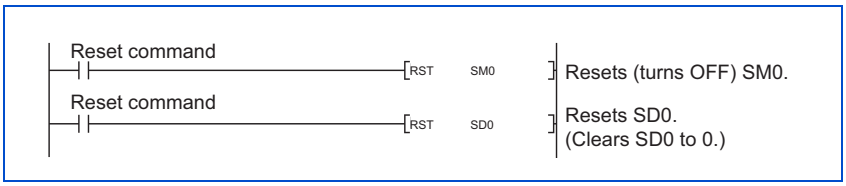

- When an operation error occurs, the choice of whether to stop or continue sequence processing can be made in the PLC function parameter settings. For details, refer to page 120.

3.23 Sequence instructions list

3.23.1 How to view the instruction list table

Classification	Instruction symbol	Symbol	Process description	Execution condition	Number of steps
Transfer	MOV	MOV (S) (D)	(S)→(D)		5
	MOVP	MOVP (S) (D)			
↑ 1)	↑ 2)	↑ 3)	↑ 4)	↑ 5)	↑ 6)

1): Instructions are classified according to application.

2): Indicates the instruction symbol used in the program.

Instruction symbols are based on 16-bit instructions.

- Change the instruction symbols for 32-bit instructions as shown below.

32-bit instructions: Add a D to the start of the instruction.

Example + ⟶ D+

16-bit command 32-bit command

- Change the instruction symbol so that the start execution command is output when the signal is ON, as shown below.

Add a P to the end of the instruction that is executed only at the leading edge of OFF to ON.

Example MOV ➡ MOVP

↓ ↓

Instruction executed during ON Instruction executed only at the leading edge of OFF to ON

3): Indicates the symbol diagram on the ladder.

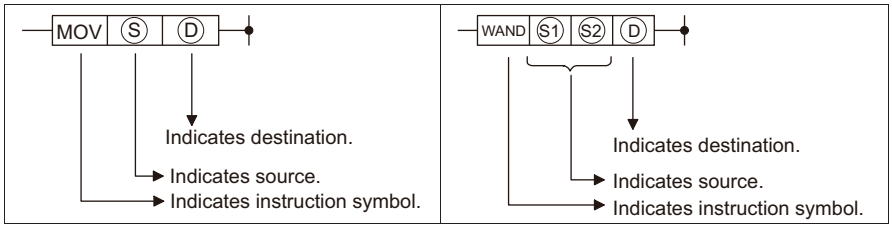

Destination: Indicates the destination of the data after operation.

Source: Stores the data before operation.

4): Indicates the process description of each instruction.

(D) + (S) ⟶ (D) ⟶ Indicates 16 bits	(D + 1, D) + (S + 1, S) ⟶ (D + 1, D) 16 bits 16 bits ⟶ Indicates 32 bits (D) + 1 (D) Upper 16 bits | Lower 16 bits

5): Details of the execution conditions for each instruction are as follows.

Symbol	Execution condition
Blank	An always executed instruction. It is always executed irrespective of whether the instruction prior condition is ON/OFF. When the prior condition is OFF, the instruction executes the OFF process.
	The instruction is executed only while the prior condition of the instruction is ON. When the prior condition is OFF, the instruction is not executed and is not processed.
	The instruction is executed one time only at the leading edge of the prior condition (OFF to ON), and is not executed or processed even when any subsequent conditions are ON.
	The instruction is executed only while the prior condition of the instruction is OFF. When the prior condition is ON, the instruction is not executed and is not processed.
	The instruction is executed one time only at the trailing edge of the prior condition (ON to OFF), and is not executed or processed even when any subsequent conditions are OFF.

6): Indicates the number of program steps required for each instruction.

3.23.2 Sequence instructions list

Classification	Instruction symbol	Symbol	Process description	Execution Condition	Number of steps	Structured text[*1]	Refer to page
Contact	LD		Logical operation start (NO contact operation start)		1		141
	LDI		Logical NOT operation start (NC contact operation start)		1		
	AND		Logical AND (NO contact series connection)		1		
	ANI		Logical AND NOT (NC contact series connection)		1		
	OR		Logical OR (NO contact parallel connection)		1		
	ORI		Logical OR NOT (NC contact parallel connection)		1		
Link	ANB		AND between logical blocks (Series connection between blocks)		1		143
	ORB		OR between logical blocks (Parallel connection between blocks)		1		
	MPS	MPS	Stores operation results		1	○	145
	MRD	MRD	Reads operation results stored in MPS		1	○	
	MPP	MPP	Reads and resets operation results stored in MPS		1	○	

Classification	Instruction symbol	Symbol	Process description	Execution Condition	Number of steps	Structured text*1	Refer to page
Output	OUT		Device output		1	○	148
	OUTT				1	○	
	OUTHT				1	○	
	OUTST				1		
	OUTHST				1		
	OUTC				1	○	
	SET	SET D	Device set		1	○	150
	RST	RST D	Device reset		1(bit)/ 2(word)	○	
	PLS	PLS D	Pulses of 1 program cycle are generated at the leading edge of input signal		2	○	152
	PLF	PLF D	Pulses of 1 program cycle are generated at the trailing edge of input signal		2	○	
Shift	SFT	SFT D	Device 1-bit shift		2	○	154
	SFTP	SFTP D			2		
Master control	MC	MC n D	Master control start		2	○	156
	MCR	MCR n	Master control release		1	○	
Program end	FEND	FEND	Termination of main program		1		159
	END	END	Always placed at the end of a sequence program to return to step 0.		1		159
Non-processing	NOP	-	Non-processing. For program erasure or spacing.		1		160
	NOPLF	NOPLF	Non-processing. New line instruction for printer output.		1		
	PAGE	PAGE n	Ignored (Subsequent programs will be controlled from step 0 of page n)		1		

*1 Supported by the FR-E800 series only. For details, refer to MELSEC-Q/L Structured Programming Manual (Common Instruction).

3.23.3 Basic instructions

Classification	Instruction symbol	Symbol	Process description	Execution Condition	Number of steps	Structured text[*1]	Refer to page
16-bit data comparison	LD=	= S1 S2	When (S1) = (S2), conductive. When (S1) ≠ (S2), non-conductive.		3		164
	AND=	= S1 S2			3		
	OR=	= S1 S2			3		
	LD<>	< > S1 S2	When (S1) ≠ (S2), conductive. When (S1) = (S2), non-conductive.		3		
	AND<>	< > S1 S2			3		
	OR<>	< > S1 S2			3		
	LD>	> S1 S2	When (S1) > (S2), conductive. When (S1) ≤ (S2), non-conductive.		3		
	AND>	> S1 S2			3		
	OR>	> S1 S2			3		
	LD<=	< = S1 S2	When (S1) ≤ (S2), conductive. When (S1) > (S2), non-conductive.		3		
	AND<=	< = S1 S2			3		
	OR<=	< = S1 S2			3		
	LD<	< S1 S2	When (S1) < (S2), conductive. When (S1) ≥ (S2), non-conductive.		3		
	AND<	< S1 S2			3		
	OR<	< S1 S2			3		
	LD>=	> = S1 S2	When (S1) ≥ (S2), conductive. When (S1) < (S2), non-conductive.		3		
	AND>=	> = S1 S2			3		
	OR>=	> = S1 S2			3		

Classification	Instruction symbol	Symbol	Process description	Execution Condition	Number of steps	Structured text[*1]	Refer to page
32-bit data comparison	LDD=	LDD= S1 S2	When (S1+1, S1) = (S2+1, S2), conductive. When (S1+1, S1) ≠ (S2+1, S2), non-conductive.		3		180
	ANDD=	ANDD= S1 S2			3		
	ORD=	ORD= S1 S2			3		
	LDD<>	LDD<> S1 S2	When (S1+1, S1) ≠ (S2+1, S2), conductive. When (S1+1, S1) = (S2+1, S2), non-conductive.		3		180
	ANDD<>	ANDD<> S1 S2			3		
	ORD<>	ORD<> S1 S2			3		
	LDD>	LDD> S1 S2	When (S1+1, S1) > (S2+1, S2), conductive. When (S1+1, S1) ≤ (S2+1, S2), non-conductive.		3		
	ANDD>	ANDD> S1 S2			3		
	ORD>	ORD> S1 S2			3		
	LDD<=	LDD<= S1 S2	When (S1+1, S1) ≤ (S2+1, S2), conductive. When (S1+1, S1) > (S2+1, S2), non-conductive.		3		
	ANDD<=	ANDD<= S1 S2			3		
	ORD<=	ORD<= S1 S2			3		
	LDD<	LDD< S1 S2	When (S1+1, S1) < (S2+1, S2), conductive. When (S1+1, S1) ≥ (S2+1, S2), non-conductive.		3		
	ANDD<	ANDD< S1 S2			3		
	ORD<	ORD< S1 S2			3		
	LDD>=	LDD>= S1 S2	When (S1+1, S1) ≥ (S2+1, S2), conductive. When (S1+1, S1) < (S2+1, S2), non-conductive.		3		
	ANDD>=	ANDD>= S1 S2			3		
	ORD>=	ORD>= S1 S2			3		
BIN 16-bit addition/ subtraction	+	+ S D	(S) + (D)→(D)		3		167
	+P	+P S D			3		
	+	+ S1 S2 D	(S1) + (S2)→(D)		4		
	+P	+P S1 S2 D			4		
	-	- S D	(S) - (D)→(D)		3		
	-P	-P S D			3		
	-	- S1 S2 D	(S1) - (S2)→(D)		4		
	-P	-P S1 S2 D			4		

Classification	Instruction symbol	Symbol	Process description	Execution Condition	Number of steps	Structured text[*1]	Refer to page
BIN 32-bit addition/ subtraction	D+	D+ S D	(D+1, D) + (S+1, S) →(D+1, D)		3		182
	D+P	D+P S D			3		
	D+	D+ S1 S2 D	(S1+1, S1) + (S2+1, S2) →(D+1, D)		4		
	D+P	D+P S1 S2 D			4		
	D-	D- S D	(D+1, D) - (S+1, S) →(D+1, D)		3		
	D-P	D-P S D			3		
	D-	D- S1 S2 D	(S1+1, S1) - (S2+1, S2) →(D+1, D)		4		
	D-P	D-P S1 S2 D			4		
BIN 16-bit multiplication/ division	*	* S1 S2 D	(S1) × (S2)→(D+1, D)		3		170
	* P	*P S1 S2 D			3		
	/	/ S1 S2 D	(S1)/(S2)→quotient(D), remainder (D+1)		4		
	/ P	/ P S1 S2 D			4		
BIN 32-bit multiplication/ division	D *	D* S1 S2 D	(S1+1, S1) × (S2+1, S2) →(D+3, D+2, D+1, D)		4		185
	D * P	D*P S1 S2 D			4		
	D/	D/ S1 S2 D	(S1+1, S1)/(S2+1, S2) →quotient (D+1, D), remainder (D+3, D+2)		4		
	D/P	D/P S1 S2 D			4		
BIN 16-bit data increment/ decrement	INC	INC D	(D)+1→(D)		2	○	173
	INCP	INCP D			2		
	DEC	DEC D	(D) - 1→(D)		2	○	
	DECP	DECP D			2		
BIN 32-bit data increment/ decrement	DINC	DINC D	(D+1, D)+1→(D+1, D)		2	○	188
	DINCP	DINCP D			2		
	DDEC	DDEC D	(D+1, D) - 1→(D+1, D)		2	○	
	DDECP	DDECP D			2		
16-bit transfer	MOV	MOV S D	(S)→(D)		2	○	174
	MOVP	MOVP S D			2		
32-bit transfer	DMOV	DMOV S D	(S+1, S)→(D+1, D)		2	○	189
	DMOVP	DMOVP S D			2		

Classification	Instruction symbol	Symbol	Process description	Execution Condition	Number of steps	Structured text[*1]	Refer to page
BIN 16-bit 2's complement	NEG	NEG (D)	0 - (D)→(D)		2	○	175
	NEGP	NEGP (D)			2		
BIN 32-bit 2's complement	DNEG	DNEG (D)	0 - (D+1, D)→(D+1, D)		2	○	191
	DNEGP	DNEGP (D)			2		
BIN 16-bit BCD conversions	BCD	BCD (S) (D)	BCD conversions (S)→(D); (S): BIN (0 to 9999)		3	○	177
	BCDP	BCDP (S) (D)			3		
BIN 32-bit BCD conversions	DBCD	DBCD (S) (D)	BCD conversions (S+1, S)→(D+1, D); (S+1, S): BIN (0 to 99999999)		3	○	192
	DBCDP	DBCDP (S) (D)			3		
BIN 16-bit BIN conversions	BIN	BIN (S) (D)	BIN conversions (S)→(D); (S): BCD (0 to 9999)		3	○	178
	BINP	BINP (S) (D)			3		
BIN 32-bit BIN conversions	DBIN	DBIN (S) (D)	BIN conversions (S+1, S)→(D+1, D); (S+1, S): BCD (0 to 99999999)		3	○	193
	DBINP	DBINP (S) (D)			3		
Jump [*1]	CJ	CJ (P)	Jump to P when the input condition is satisfied		2		194
	SCJ	SCJ (P)	Jump to P from the next scan after the input condition is satisfied		2		
	JMP	JMP (P)	Unconditional jump to P		2		
	GOEND	GOEND	Jump to END instruction when the input condition is satisfied		1	○	

*1 Supported by the FR-E800 series only. For details, refer to MELSEC-Q/L Structured Programming Manual (Common Instruction).

3.23.4 Application instructions

Classification	Instruction symbol	Symbol	Process description	Execution Condition	Number of steps	Structured text[*1]	Refer to page
BIN 16-bit logical AND	WAND	WAND (S) (D)	(D) AND (S)→(D)		3		197
	WANDP	WANDP (S) (D)			3		
	WAND	WAND (S1) (S2) (D)	(S1) AND (S2)→(D)		4	○	
	WANDP	WANDP (S1) (S2) (D)			4		
BIN 32-bit logical AND	DAND	DAND (S) (D)	(D+1, D) AND (S+1, S) →(D+1, D)		3		207
	DANDP	DANDP (S) (D)			3		
	DAND	DAND (S1) (S2) (D)	(S1+1, S1) AND (S2+1, S2) →(D+1, D)		4	○	
	DANDP	DANDP (S1) (S2) (D)			4		

Classification	Instruction symbol	Symbol	Process description	Execution Condition	Number of steps	Structured text*1	Refer to page
BIN 16-bit logical OR	WOR	WOR S D	(D) OR (S)→(D)		3		200
	WORP	WORP S D			3		
	WOR	WOR S1 S2 D	(S1) OR (S2)→(D)		4	○	
	WORP	WORP S1 S2 D			4		
BIN 32-bit logical OR	DOR	DOR S D	(D+1, D) OR (S+1, S) →(D+1, D)		3		210
	DORP	DORP S D			3		
	DOR	DOR S1 S2 D	(S1+1, S1) OR (S2+1, S2) →(D+1, D)		4	○	
	DORP	DORP S1 S2 D			4		
BIN 16-bit exclusive OR	WXOR	WXOR S D	(D) XOR (S)→(D)		3		202
	WXORP	WXORP S D			3		
	WXOR	WXOR S1 S2 D	(S1) XOR (S2)→(D)		4	○	
	WXORP	WXORP S1 S2 D			4		
BIN 32-bit exclusive OR	DXOR	DXOR S D	(D+1, D) XOR (S+1, S) →(D+1, D)		3		213
	DXORP	DXORP S D			3		
	DXOR	DXOR S1 S2 D	(S1+1, S1) XOR (S2+1, S2) →(D+1, D)		4	○	
	DXORP	DXORP S1 S2 D			4		
BIN 16-bit exclusive NOR	WXNR	WXNR S D	(D) XOR (S)→(D)		3		204
	WXNRP	WXNRP S D			3		
	WXNR	WXNR S1 S2 D	(S1) XOR (S2)→(D)		4	○	
	WXNRP	WXNRP S1 S2 D			4		
BIN 32-bit exclusive NOR	DXNR	DXNR S D	(D+1, D) XOR (S+1, S) →(D+1, D)		3		215
	DXNRP	DXNRP S D			3		
	DXNR	DXNR S1 S2 D	(S1+1, S1) XOR (S2+1, S2) →(D+1, D)		4	○	
	DXNRP	DXNRP S1 S2 D			4		

*1 Supported by the FR-E800 series only. For details, refer to MELSEC-Q/L Structured Programming Manual (Common Instruction).

3.23.5 Display instruction

Classification	Instruction symbol	Symbol	Process description	Execution Condition	Number of steps	Structured text*1	Refer to page
Character string data transfer	$MOV	$MOV (S) (D)	Character string specified with (S) is transferred to devices after that specified with (D).		3		217
	$MOVP	$MOVP (S) (D)			3		
Character string output	G.PRR	G.PRR n (S) (D)	Data stored in the device specified with (S) is sent to PU. (n, (D) are dummies)		3		218
	GP.PRR	GP.PRR n (S) (D)			3		
	UMSG	UMSG (S)	Data stored in the device specified with (S) is sent to PU.		2	○	

*1 Supported by the FR-E800 series only. For details, refer to MELSEC-Q/L Structured Programming Manual (Common Instruction).

3.23.6 Control syntaxes

Conditional statements and repeat statements are available for structured text (ST) programs to perform comparison and repetition. Refer to page 8 for availability of ST programs.

- Conditional statement: When a certain condition is satisfied, the selected statement is executed.
- Repeat statement: One or more statements are executed repeatedly according to the state of a certain variable or condition.

The following table lists the control syntaxes.

For details on control statements, MELSEC-Q/L Programming Manual (Structured Text).

Classification	Control syntaxes
Conditional statement	IF statement
	CASE statement
Repeat statement	FOR...DO syntax
	WHILE...DO syntax
	REPEAT...UNTIL syntax
Other control syntaxes	RETURN syntax
	EXIT syntax

3.24 How to view instructions

The subsequent descriptions shall be in the following format.

1) → **3.26.8 Data transfer instruction: 16-bit data transfer .. MOV, MOVP**

3) 4)

2) →

		Applicable device									Digit specification	Error flag
		Bit device			Word (16-bit) device			Constant		Level		
		X	Y	M	T	C	D	K	H	N		(SM0)
MOV, MOVP	Ⓢ	○	○	○	○	○	○	○	○		K1 to K4	○
	Ⓓ		○	○	○	○	○					

5) →

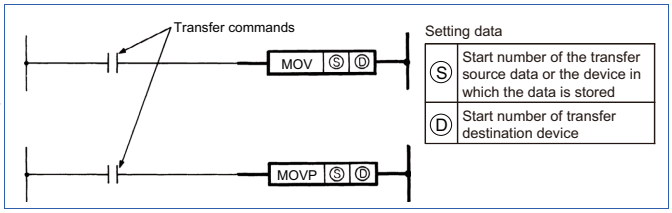

6) → ◆ **Function**

MOV

16-bit data from the device specified with Ⓢ is transferred to the device specified with Ⓓ.

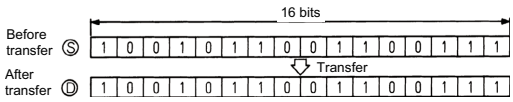

7) → ◆ **Execution condition**

The execution conditions for transfer instructions are as follows.

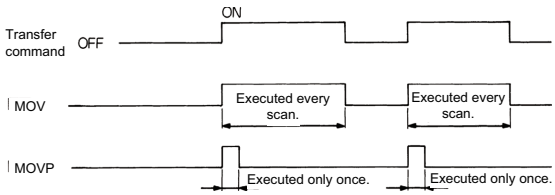

8) → ◆ **Program example**

MOV

- Program that stores 155 as a binary value in D8 when X8 turns ON.

◆ Description

1) Indicates the item number, instruction overview and instruction symbol.

2) Devices that can be used by instructions are marked with ○.

3) When a bit device is used, this indicates digit specifications that can be set in the instruction required by the digit specification.

4) When an operation error occurs, instructions whose error flags turn ON are marked with ○.

5) Indicates the format in ladder mode.

6) Describes the instruction.

7) Indicates the execution conditions of the instruction.

8) Indicates the program example in ladder mode and list mode.

3.25 Sequence instructions

Sequence instructions are used in relay control circuits, etc.

3.25.1 Contact instruction: operation start, series connection, parallel connection ... LD, LDI, AND, ANI, OR, ORI

Applicable device									Digit specification	Error flag
Bit device			Word (16-bit) device			Constant		Level		
X	Y	M	T	C	D	K	H	N		(SM0)
○	○	○	○	○						

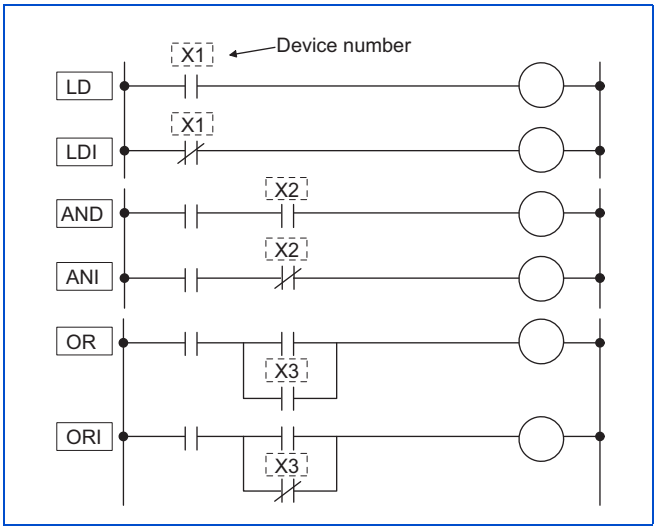

◆ Function

LD , LDI

- LD is the NO contact operation start instruction and LDI is the NC contact operation start instruction. When the bit of the word device is specified, these contacts turn on/off by 1/0 of the specified bit.

AND , ANI

- AND is the NO contact series connection instruction, and ANI is the NC contact series connection. They import the ON/OFF information of the specified device to perform the AND operation with the operation result up to this point and take the resulting value as the operation result.
- There are no usage limitations on AND and ANI, but the following limitations exist in ladder mode.

Write: When AND or ANI are connected in a series, a ladder with a maximum of 24 steps can be created.

Read: When AND or ANI are connected in a series, a ladder with a maximum of 24 steps can be displayed. If the ladder exceeds 24 steps, steps up to the 24th step are displayed.

OR , ORI

- OR is the parallel connection instruction with a single NO contact, and ORI is the parallel connection instruction with a single NC contact. They import the ON/OFF information of the specified device to perform the OR operation with the operation result up to this point and take the resulting value as the operation result.
- There are no usage limitations on OR and ORI, but the following limitations exist in ladder mode.

Write: A ladder that contains 23 OR or ORI continually linked can be created.

Read: A ladder that contains 23 OR or ORI continually linked can be displayed. Ladders that contains more than 23 OR or ORI cannot be displayed correctly.

◆ Execution condition

The instructions explained in this section are executed every scan irrespective of the device ON/OFF status or the operation result directly prior to the execution.

◆ Program example

LD , LDI , AND , ANI , OR , ORI

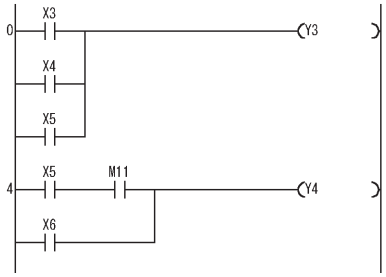

· Coding

```
0  LD    X3
1  OR    X4
2  OR    X5
3  OUT   Y3
4  LD    X5
5  AND   M11
6  OR    X6
7  OUT   Y4
8  END
```

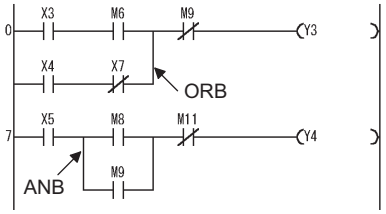

· Coding

```
0  LD    X3
1  AND   M6
2  LD    X4
3  ANI   X7
4  ORB
5  ANI   M9
6  OUT   Y3
7  LD    X5
8  LD    M8
9  OR    M9
10 ANB
11 ANI   M11
12 OUT   Y4
13 END
```

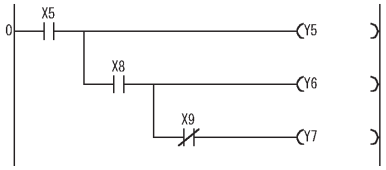

· Coding

```
0  LD    X5
1  OUT   Y5
2  AND   X8
3  OUT   Y6
4  ANI   X9
5  OUT   Y7
6  END
```

3.25.2 Association instruction: ladder block series connection, parallel connection ... ANB, ORB

Applicable device									Digit specification	Error flag
Bit device			Word (16-bit) device			Constant		Level		
X	Y	M	T	C	D	K	H	N		(SM0)

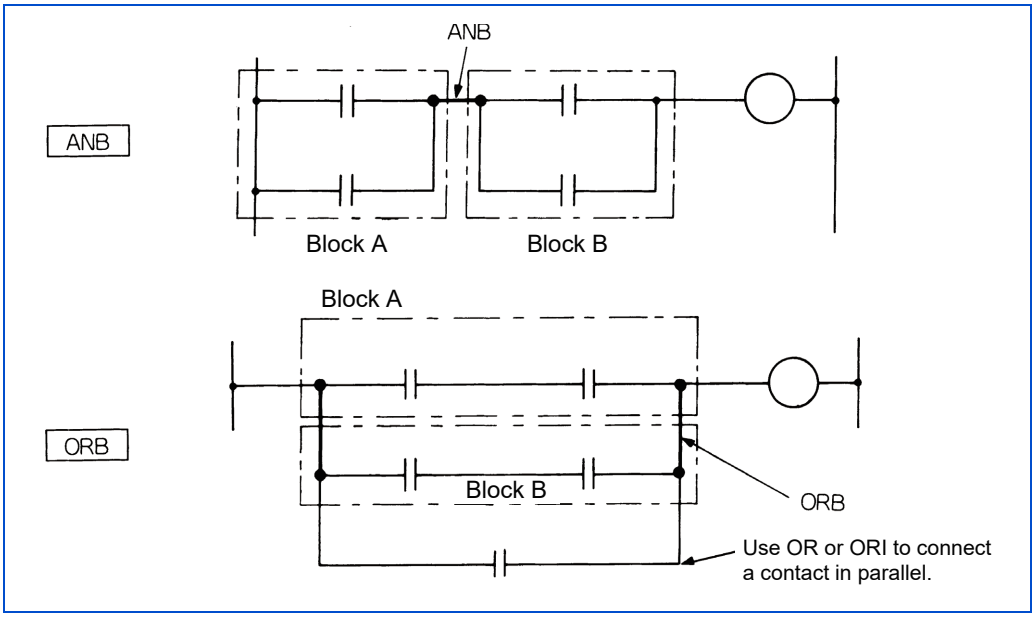

◆ Function

ANB

- The AND operation is executed for the A block and B block to produce the operation result.
- The ANB symbol is a connection symbol, not a contact symbol.
- For programming in the list mode, ANB can write up to 15 instructions (16 blocks) in succession.

ORB

- The OR operation is executed for the A block and B block to produce the operation result.
- ORB creates parallel connections with ladder blocks that have two or more contacts. Use OR or ORI to create parallel connections with ladder blocks that only have one contact, there is no need to use ORB.

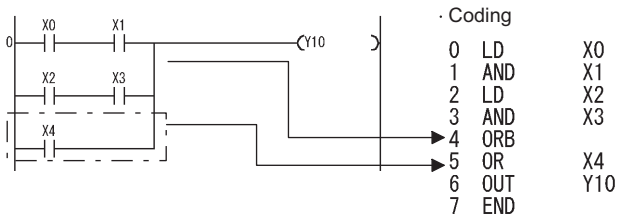

- The ORB symbol is a connection symbol, not a contact symbol.
- For programming in the list mode, ORB can write up to 15 instructions (16 blocks) in succession.

◆ Program example

ANB

The following two types of program coding are available for continuous series connection of ladder blocks. However, the coding example 1 should be applied.

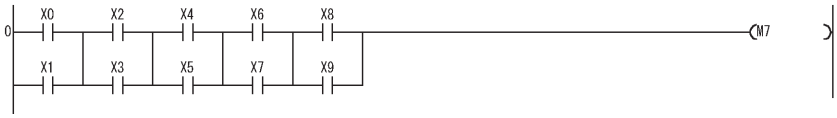

▪ Coding example 1

```
 0  LD    X0
 1  OR    X1
 2  LD    X2
 3  OR    X3
 4  ANB
 5  LD    X4
 6  OR    X5
 7  ANB
 8  LD    X6
 9  OR    X7
10  ANB
11  LD    X8
12  OR    X9
13  ANB
14  OUT   M7
15  END
```

▪ Coding example 2

```
 0  LD    X0
 1  OR    X1
 2  LD    X2
 3  OR    X3
 4  LD    X4
 5  OR    X5
 6  LD    X6
 7  OR    X7
 8  LD    X8
 9  OR    X9
10  ANB
11  ANB
12  ANB
13  ANB
14  OUT   M7
15  END
```

ORB

The following two types of program coding are available for continuous parallel connection of ladder blocks. However, the coding example 1 should be applied.

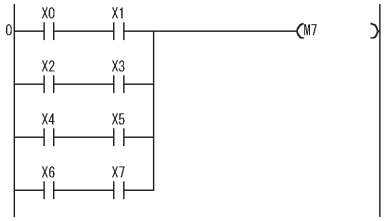

▪ Coding example 1

```
 0  LD    X0
 1  AND   X1
 2  LD    X2
 3  AND   X3
 4  ORB
 5  LD    X4
 6  AND   X5
 7  ORB
 8  LD    X6
 9  AND   X7
10  ORB
11  OUT   M7
12  END
```

▪ Coding example 2

```
 0  LD    X0
 1  AND   X1
 2  LD    X2
 3  AND   X3
 4  LD    X4
 5  AND   X5
 6  LD    X6
 7  AND   X7
 8  ORB
 9  ORB
10  ORB
11  OUT   M7
12  END
```

3.25.3 Association instruction: operation results, push, read, pop ... MPS, MRD, MPP

Applicable device									Digit specification	Error flag
Bit device			Word (16-bit) device			Constant		Level		
X	Y	M	T	C	D	K	H	N		(SM0)

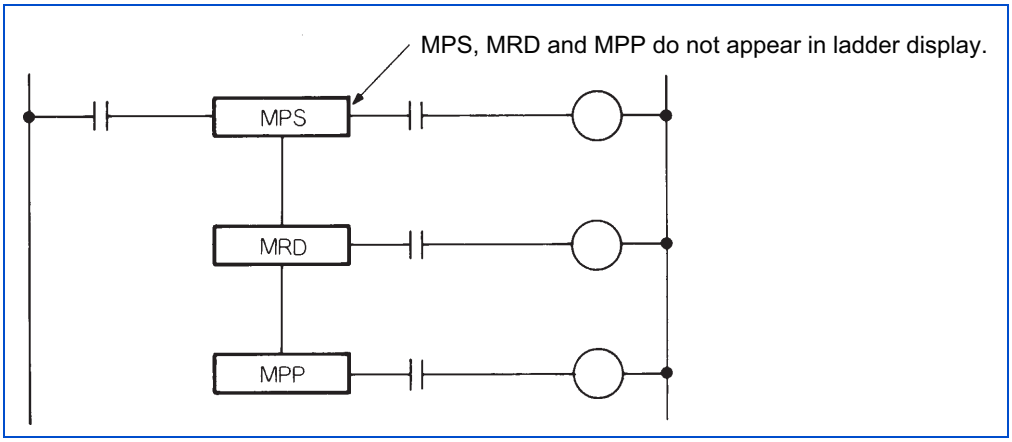

◆ Function

MPS

- The operation result (ON/OFF) directly prior to the MPS instruction is stored.
- The MPS instruction can be used continuously up to 16 times. When the MPP instruction is used during the program, the number of the MPS instructions to be used is reduced by 1.

MRD

- The operation result stored by the MPS instruction is read, and the operation of the following step is continued by this operation result.

MPP

- The operation result stored by the MPS instruction is read, and the operation of the following step is continued by this operation result.
- The operation result stored by the MPS instruction is cleared.
- The number of MPS instructions to be used is reduced by 1.

Point

- The ladder is as shown below when MPS, MRD and MPP are used and when they are not used.

Ladder when MPS, MRD and MPP are used	Ladder when MPS, MRD and MPP are not used
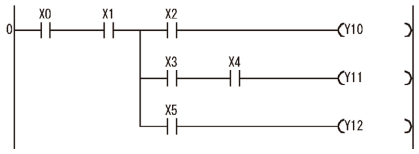	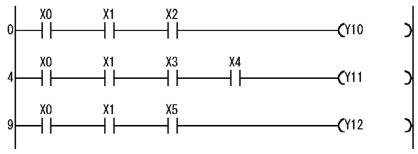

- Be sure to match the number of MPS and MPP instructions. The following will occur if the number used is different. If the number of MPS instructions is greater, the ladder is changed and the PLC function executes operations on the changed ladder.

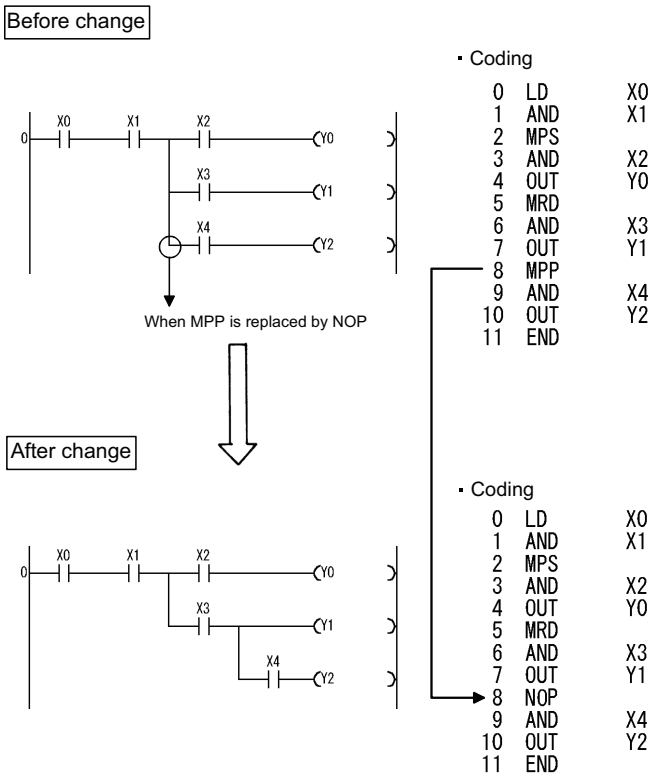

◆ Program example

MPS , MRD , MPP

- Program using MPS, MRD and MPP

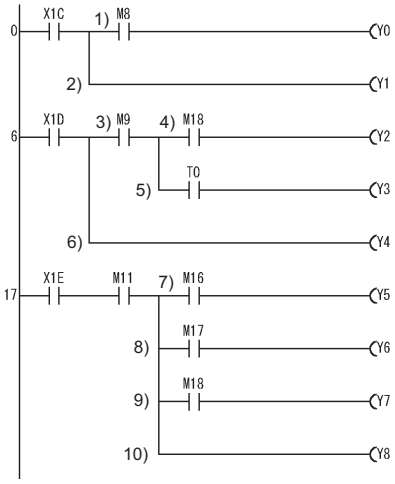

· Coding

```
1)  0  LD      X1C
    1  MPS
    2  AND     M8
    3  OUT     Y0
2)  4  MPP
    5  OUT     Y1
    6  LD      X1D
3)  7  MPS
    8  AND     M9
4)  9  MPS
   10  AND     M18
   11  OUT     Y2
5) 12  MPP
   13  AND     T0
   14  OUT     Y3
6) 15  MPP
   16  OUT     Y4
   17  LD      X1E
   18  AND     M11
7) 19  MPS
   20  AND     M16
   21  OUT     Y5
8) 22  MRD
   23  AND     M17
   24  OUT     Y6
9) 25  MRD
   26  AND     M18
   27  OUT     Y7
10) 28  MPP
   29  OUT     Y8
   30  END
```

3.25.4 Output instruction: bit device, timer, counter ... OUT

		Applicable device									Digit specification	Error flag
		Bit device			Word (16-bit)			Constant		Level		
		X	Y	M	T	C	D	K	H	N		(SM0)
Bit device			○	○								
Timer	Device				○							
	Setting value						○	○				
Counter	Device					○						
	Setting value						○	○				

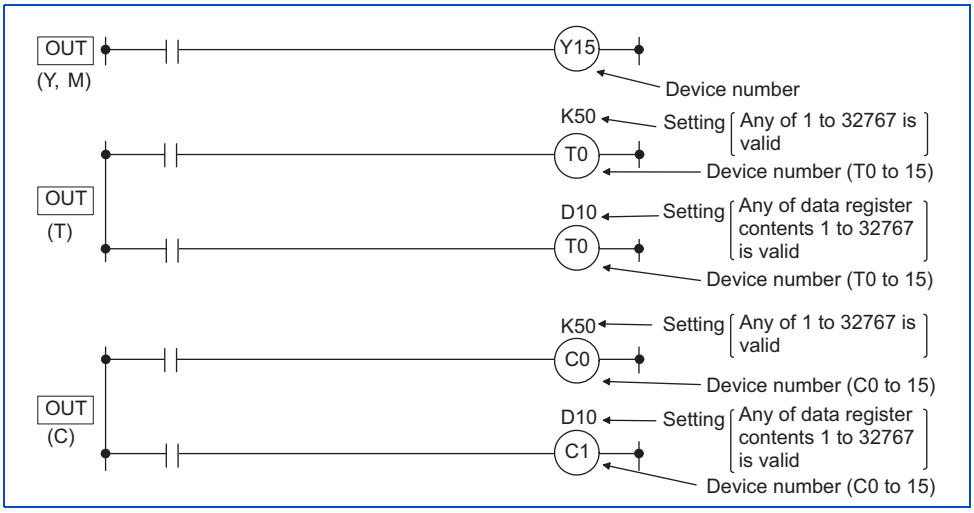

◆ Function

OUT (Y, M)

- Operation results up to the OUT instruction are output to the specified device.

Operation result	OUT instruction		
	Coil	Contact	
		NO contact	NC contact
OFF	OFF	Non-conduction	Conduction
ON	ON	Conduction	Non-conduction

NOTE

- The OUT instruction requires 3 steps when a special relay (M) is used.

OUT (T)

- When the operation result up to the OUT instruction is ON, the timer coil turns ON and counts up the value up to the setting value. When the coil's timer reaches the setting value (counted value ≥ setting value), the contacts enter the following states:

NO contact	Conduction
NC contact	Non-conduction

- When the operation result up to the OUT instruction changes from ON to OFF, the following occurs.

Type of timer	Timer coil	Present value of timer	Before the time up		After the time up	
			NO contact	NC contact	NO contact	NC contact
100 ms timer	OFF	0	Non-conduction	Conduction	Non-conduction	Conduction
10 ms timer						
100 ms retentive timer	OFF	Retention of present value	Non-conduction	Conduction	Conduction	Non-conduction

- After the timer reaches the setting value, the state of the retentive timer contact does not change until the RST instruction is executed.
- Negative values (-32768 to -1) cannot be set for the setting value.
- When the timer setting is specified with a word device, the range of the setting value is not checked. To avoid negative values to be set, check the range of the setting value with a user program.
- When the setting value is "0", the timer times up at OUT T command execution.
- For details on the counting method of the timer, refer to page 109.

OUT (C)

- If the operation result changes from OFF to ON up to the OUT instruction, +1 is added to the present value (count value), and when counting reaches the setting value (present value = setting value), the contact is as follows.

NO contact	Conduction
NC contact	Non-conduction

- The timer will not start counting if the operation result remains ON. (Count input does not need to be converted into pulse form.)
- After a count-up, the count value and state of the contact do not change until the RST instruction is executed.
- Negative values (-32768 to -1) cannot be set for the setting value. Furthermore, if the setting value is 0, the same process as for a setting value of 1 is performed.
- For details on the counting method of the counter, refer to page 112.

◆ Execution condition

The OUT instruction is executed for each scan irrespective of the operation result up to the instruction.

◆ Program example

OUT

- Program that outputs to the output module.

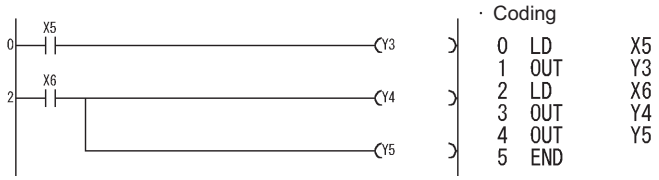

- Program that turns X0 ON, and then 10 seconds later turns Y10 and Y14 ON.

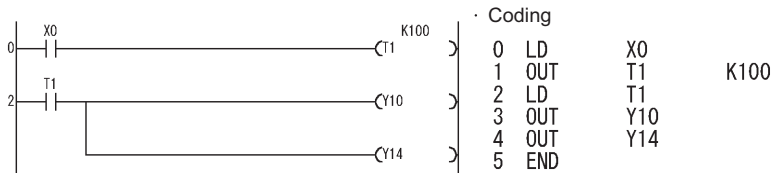

3.25.5 Output instruction: device set, reset ... SET, RST

		Applicable device									Digit specification	Error flag
		Bit device			Word (16-bit)			Constant		Level		
		X	Y	M	T	C	D	K	H	N		(SM0)
SET	Ⓓ	○	○	○								
RST		○	○	○	○	○	○					

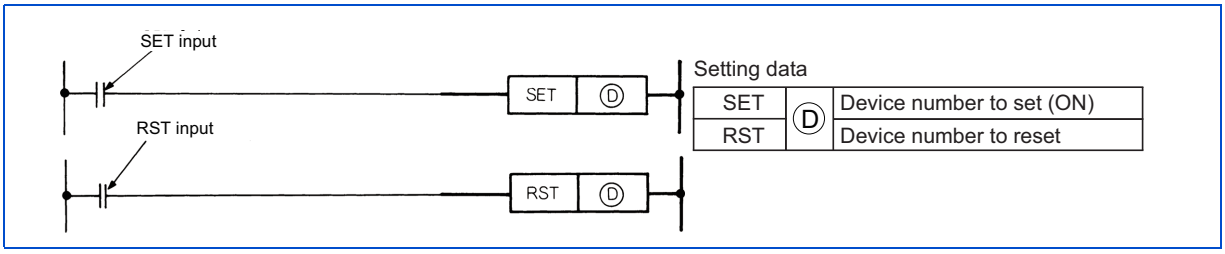

◆ Function

SET

- When SET input is turned ON, the specified device turns ON.
- A device that was turned ON remains ON even if the SET input is turned OFF. It can be turned OFF with the RST instruction.

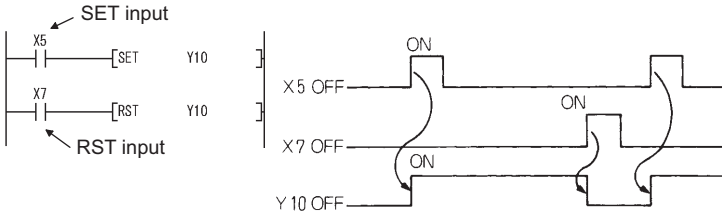

- When the SET input is OFF, the device state does not change.

RST

- When the RST input is turned ON, the specified device is as follows.

Device	Status
Bit device (Y, M)	The coil and contact are turned OFF.
Timer, counter (T, C)	The present value is set to 0, and the coil and contact are turned OFF.
Word device other than timer and counter (D)	The content is set to 0.

- When the RST input is OFF, the device state does not change.
- The RST (D) function is identical to the following ladder.

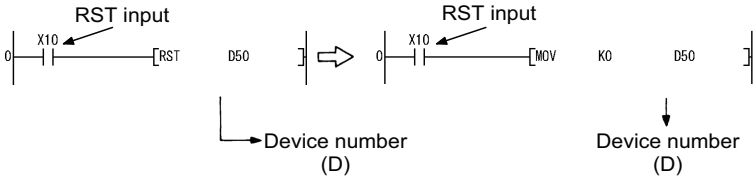

◆ Execution condition

The SET and RST instructions are executed for each scan.

NOTE

- The number of steps is three when the following devices are used.

SET instruction ... Special relay (M)

RST instruction ... Special relay (M), all word devices

◆ Program example

SET , RST

- Program that sets Y8 (ON) when X8 turns ON, and resets Y8 (OFF) when X9 turns ON.

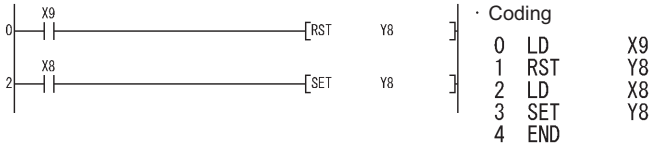

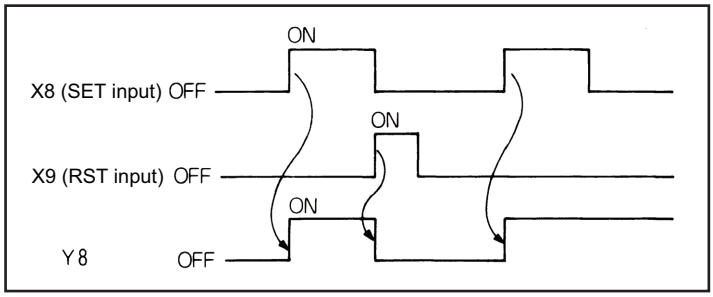

Operations of SET and RST instructions

- Program that sets the data register content to 0.

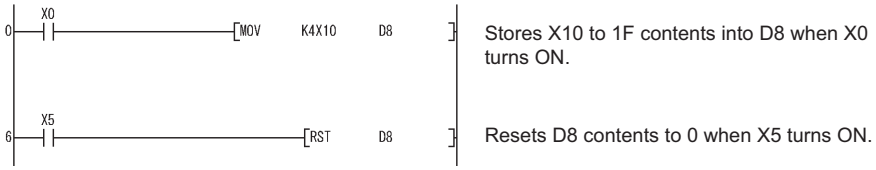

· Coding

```
 0  LD    X0
 1  MOV   K4X10   D8
 6  LD    X5
 7  RST   D8
10  END
```

3.25.6 Output instruction: rising, falling differential output ... PLS, PLF

	Applicable device									Digit specification	Error flag
	Bit device			Word (16-bit) device			Constant		Level		
	X	Y	M	T	C	D	K	H	N		(SM0)
Ⓓ		○	○								

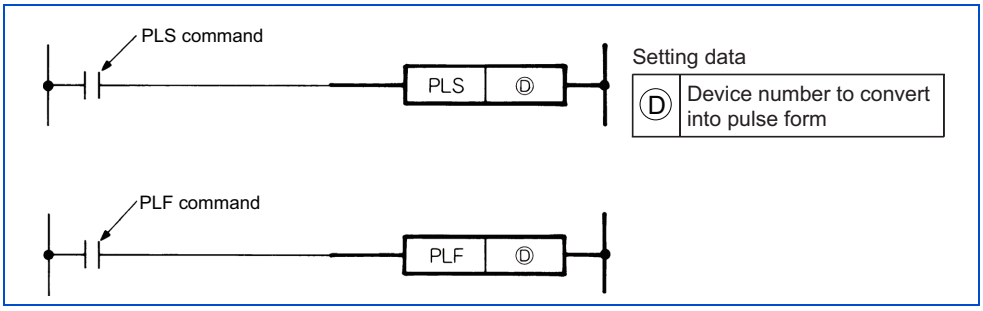

◆ Function

PLS

- The specified device is turned ON when the PLS command changes from OFF to ON, and OFF at all times other than when the PLS command is turned OFF to ON (OFF to OFF, ON to ON, ON to OFF). If there is one PLS instruction for the device specified by Ⓓ during one scan, the specified device is turned ON for one scan. Do not execute the PLS instruction of the same device multiple times during one scan.

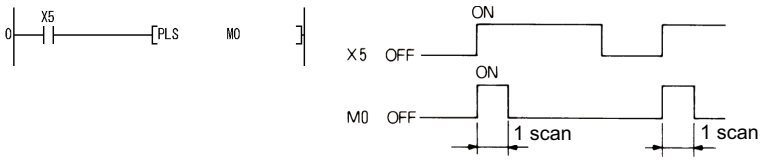

- After the PLS instruction is executed, it will not be executed again even if STOP is executed and RUN is executed again.

PLF

- The specified device is turned ON when the PLF command changes from ON to OFF, and OFF at all times other than when the PLS command is turned ON to OFF (OFF to OFF, OFF to ON, ON to ON). If there is one PLF instruction for the device specified by Ⓓ during one scan, the specified device is turned ON for one scan. Do not execute the PLF instruction of the same device multiple times during one scan.

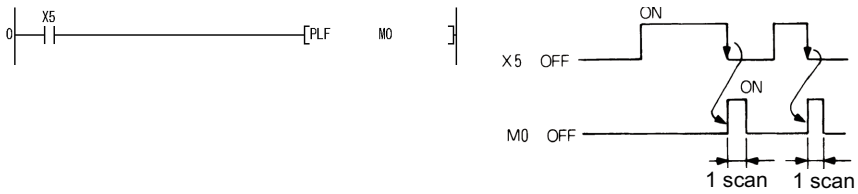

- After the PLF instruction is executed, it will not be executed again even if STOP is executed and RUN is executed again.

◆ Program example

PLS

Program that executes the PLS instruction when X9 is turned ON.

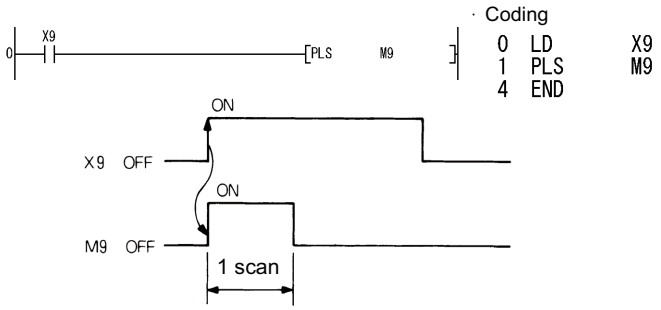

PLF

Program that executes the PLF instruction when X9 is turned OFF.

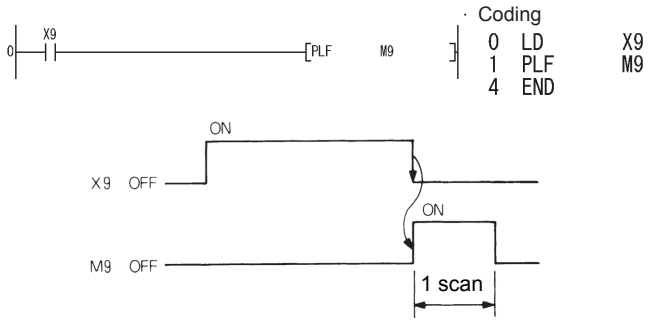

3.25.7 Shift instruction: bit device shift ... SFT, SFTP

	Applicable device									Digit specification	Error flag
	Bit device			Word (16-bit) device			Constant		Level		
	X	Y	M	T	C	D	K	H	N		(SM0)
Ⓓ		○	○								

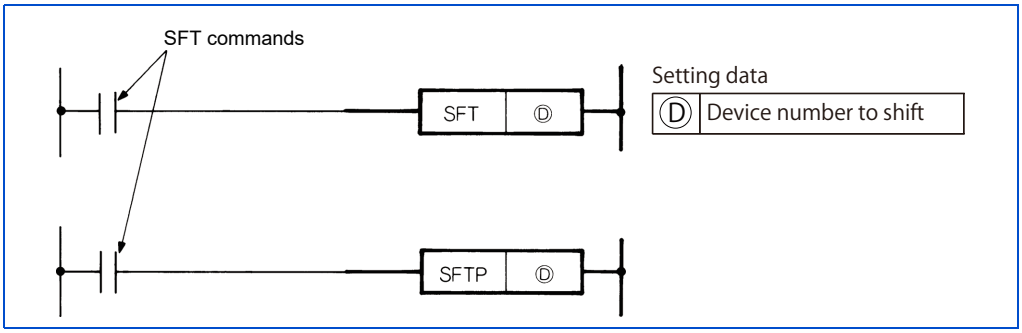

◆ Function

- The ON/OFF status is shifted to the device immediately prior to the device specified with Ⓓ, and the prior device is set to OFF.
- Use the SET instruction to turn ON the start device to be shifted.
- When SFT or SFTP are used continuously, start programming from larger device numbers.

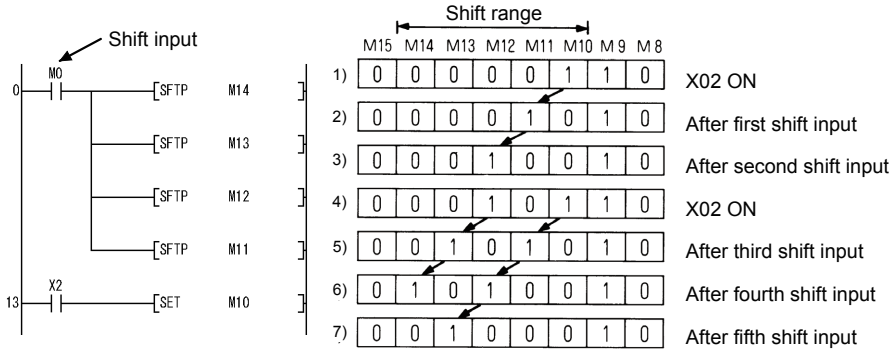

*1 At M8 to 15, 1 indicates ON and 0 indicates OFF.

◆ Program example

SFT

- Program that shifts Y7 to YB when X8 turns ON.

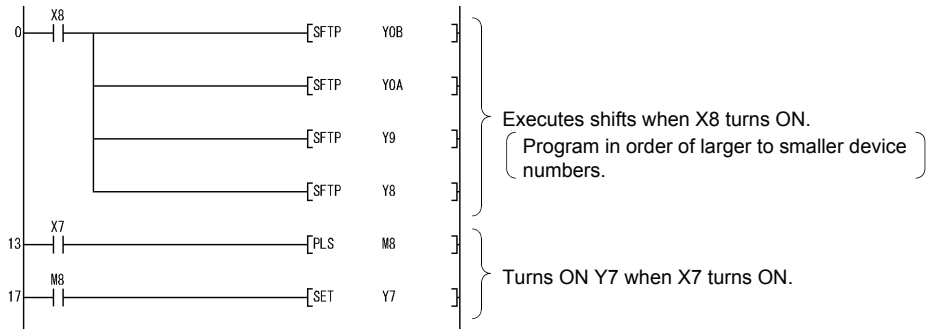

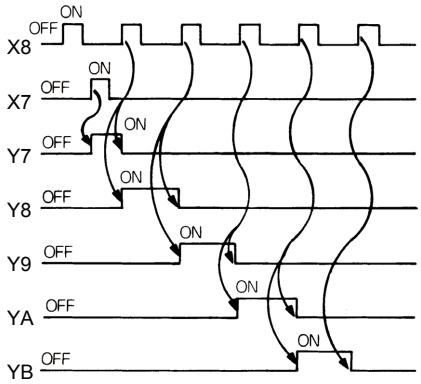

- Coding

```
 0  LD      X8
 1  SFTP    Y0B
 4  SFTP    Y0A
 7  SFTP    Y9
10  SFTP    Y8
13  LD      X7
14  PLS     M8
17  LD      M8
18  SET     Y7
19  END
```

3.25.8 Master control instruction: master control set, reset ... MC, MCR

	Applicable device									Digit specification	Error flag
	Bit device			Word (16-bit) device			Constant		Level		
	X	Y	M	T	C	D	K	H	N		(SM0)
n									○		
Ⓓ		○	○								

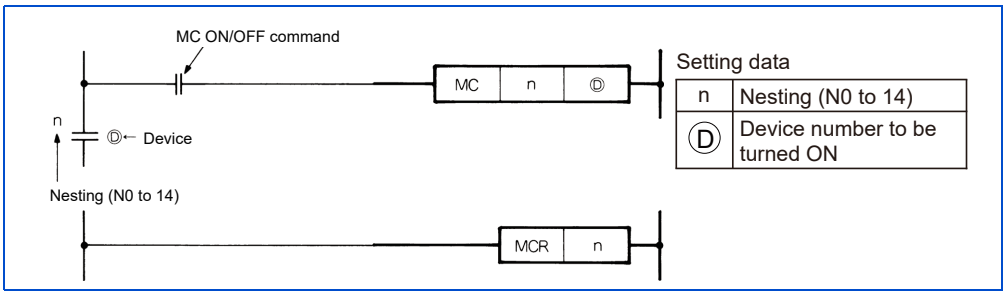

◆ Function

- This instruction is for creating an efficient ladder switching sequence program by opening and closing the common bus of the ladder using the master control instruction. The following ladders use the master control.

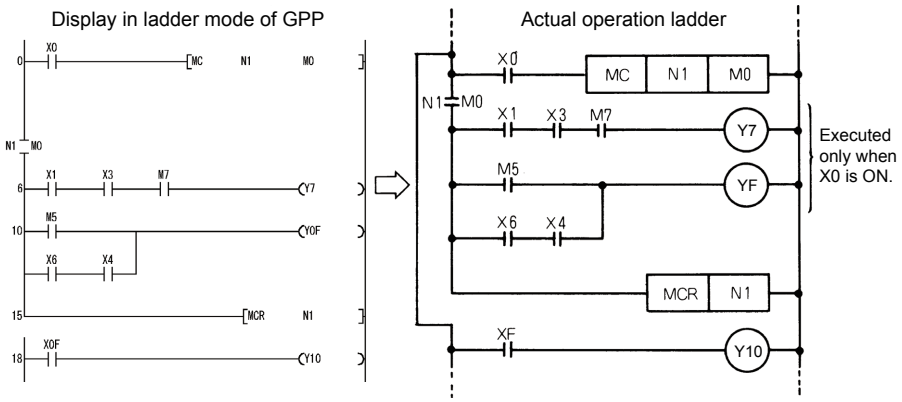

MC

- When the MC ON/OFF instruction is turned ON at the start of master control, the operation results from MC to MCR are as per the instruction (ladder).
- Even when the MC instruction is OFF, the scan time is not shortened because the scan is executed between the MC instruction and MCR instruction. Also, when the MC instruction is OFF, the operation results of MC and MCR are as follows.

Device	Device status
High-speed timer Low-speed timer	The count value becomes 0, and both coil and contact turn OFF.
High-speed retentive timer Low-speed retentive timer Counter	The coil turns OFF, but the count value and contact both retain the current state.
Device currently under OUT instruction	All turn OFF.
Device under SET, RST, SFT instruction Device under basic instruction, application instruction	Retain the current state.

- The MC instruction can use the same nesting (N) number any number of times by changing the Ⓓ device.
- When the MC instruction is ON, the coil of the device specified by Ⓓ is ON. Furthermore, as a double coil occurs when the same device is used by instructions such as the OUT instruction, do not use a device specified by Ⓓ when it is executing a different instruction.

MCR

- The master control release instruction that indicates the end of the master control range.
- Do not add a contact instruction to the front of the MCR instruction.
- The MC and MCR instructions who have the same nesting number are used together. However, in a nesting structure where the MCR instructions are at one position, every master control can be ended with the smallest nesting (N) number only.

◆ Program example

- The master control instruction can be used as a nesting structure. Each master control area is separated by nesting (N). N0 to N14 can be used for nesting. A ladder in which the program execution conditions are limited successively can be created by using the nesting structure. A ladder that uses a nesting structure is as follows.

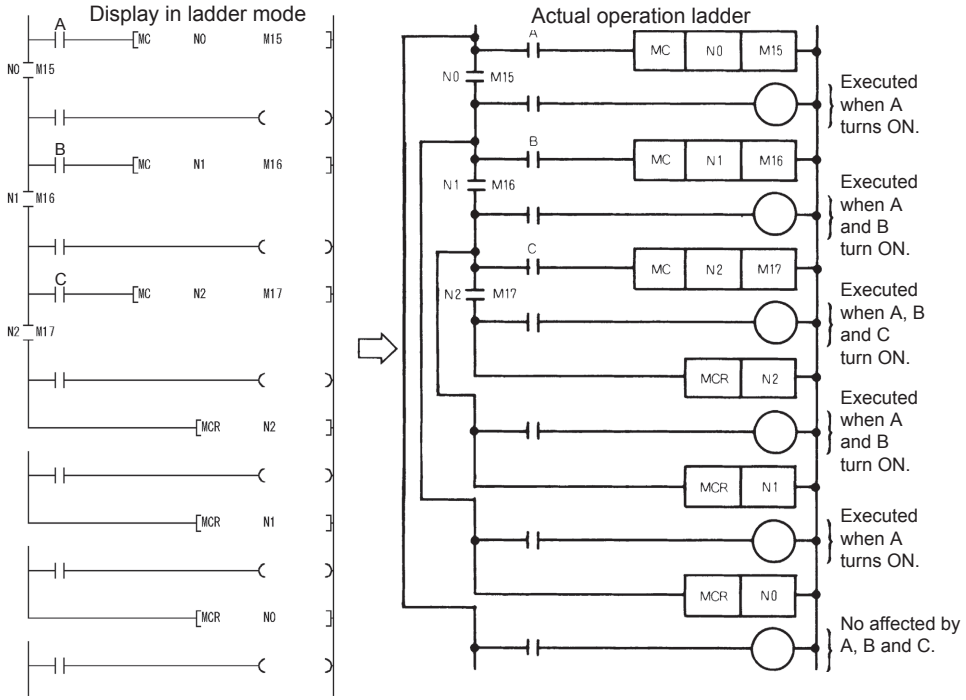

Take note of the following points when using a nesting structure.

- A maximum of 15 nests (N0 to 14) can be used. When applying nesting, MC uses numbers from the lower nesting (N) numbers upwards, whereas MCR uses numbers from the higher numbers downwards. If the order is reversed, the structure is not a nesting structure and the PLC function cannot operate normally.

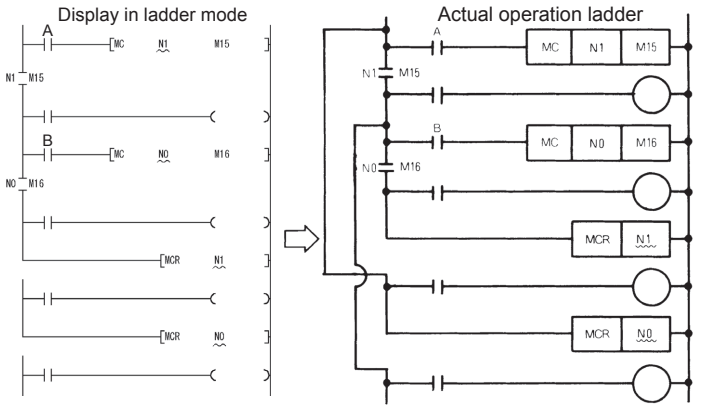

Nesting numbers of MCR are opposite.

Since buses cross each other, normal master control ladder cannot be created.

- If the nesting structure consists of MCR instructions collected in one location, the single lowest nesting (N) number can be used to terminate all master controls.

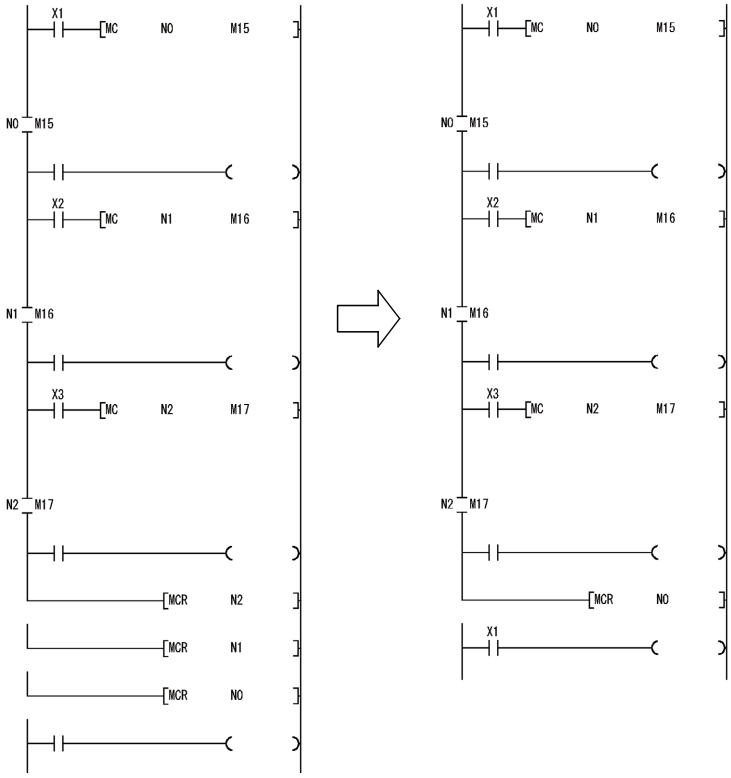

3.25.9 Termination instruction: termination of main program ... FEND

Applicable device									Digit specification	Error flag
Bit device			Word (16-bit) device			Constant		Level		
X	Y	M	T	C	D	K	H	N		(SM0)

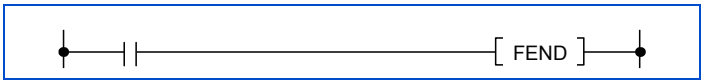

◆ Function

- Execution of the FEND instruction will cause the CPU module to terminate the program it was executing.
- Even sequence programs following the FEND instruction can be displayed in ladder display at a peripheral device.

(Peripheral devices continue to display ladders until encountering the END instruction.)

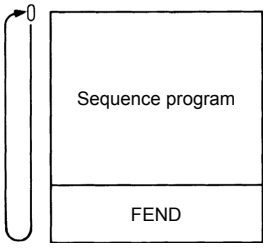

3.25.10 Termination instruction: sequence program termination ... END

Applicable device									Digit specification	Error flag
Bit device			Word (16-bit) device			Constant		Level		
X	Y	M	T	C	D	K	H	N		(SM0)

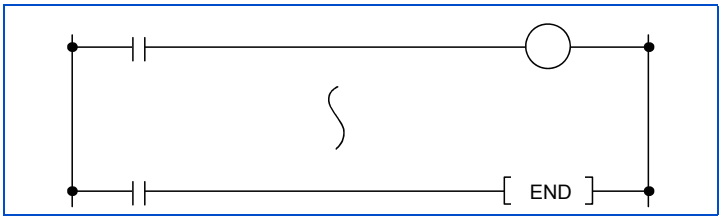

◆ Function

- Indicates the end of a program. Scanning terminates with this step, and returns to step 0.

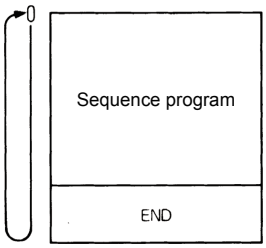

- The END instruction cannot be used during the sequence program.

NOTE

- An operation error occurs if there is no END instruction during the program, and the PLC function does not operate.

3.25.11 Other instructions: non-processing ... NOP, NOPLF, PAGE n

Applicable device									Digit specification	Error flag
Bit device			Word (16-bit) device			Constant		Level		
X	Y	M	T	C	D	K	H	N		(SM0)
										○

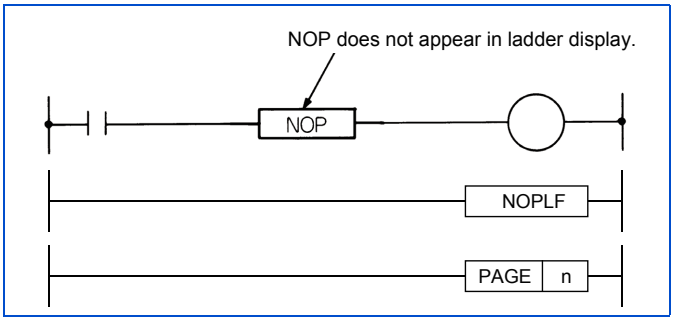

◆ Function

NOP

Non-processing instructions do not have an effect on previously executed operations.

NOP are used in the following situations.

- Creating space for sequence program debugging.
- Deleting instructions without changing the number of steps. (Replaced by NOP)
- Temporarily deleting instructions.

NOPLF

This is a no operation instruction that has no impact on any operations up to that point.

The NOPLF instruction is used when printing from a peripheral device to force a page change at any desired location.

- When printing ladders

A page break will be inserted between ladder blocks with the presence of the NOPLF instruction.

The ladder cannot be displayed correctly if an NOPLF instruction is inserted in the midst of a ladder block.

Do not insert an NOPLF instruction in the midst of a ladder block.

- When printing instruction lists

The page will be changed after the printing of the NOPLF instruction.

Refer to the Operating Manual for the peripheral device in use for details of printouts from peripheral devices.

PAGE n

This is a no operation instruction that has no impact on any operations up to that point.

No processing is performed at peripheral devices with this instruction.

◆ Program example

NOP

- Contact short-circuit (AND, ANI)

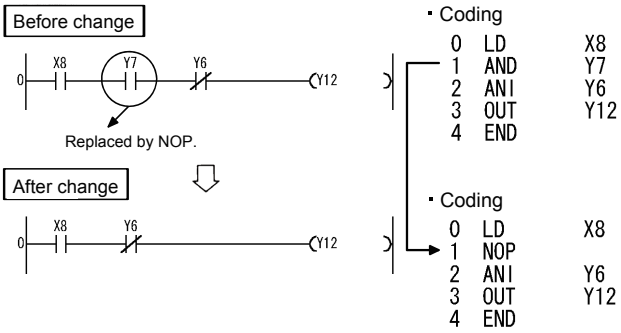

- Contact short-circuit (LD, LDI)

Caution is required because the ladder completely changes if LD or LDI are replaced by NOP.

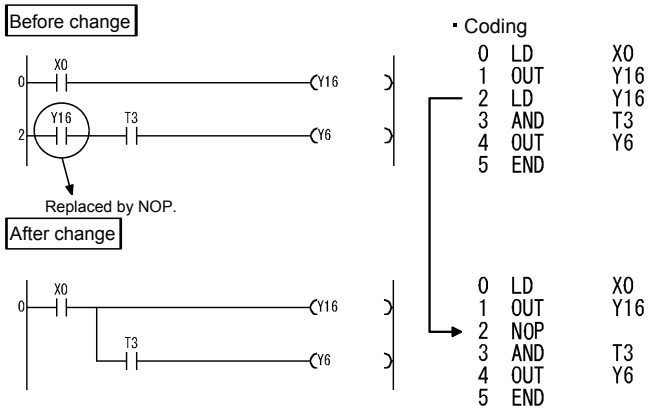

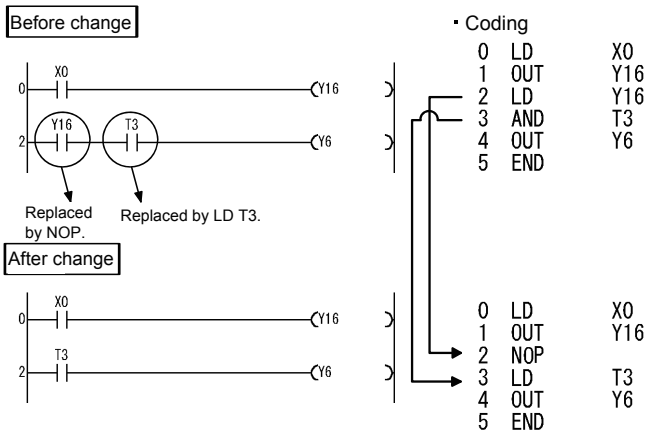

NOPLF

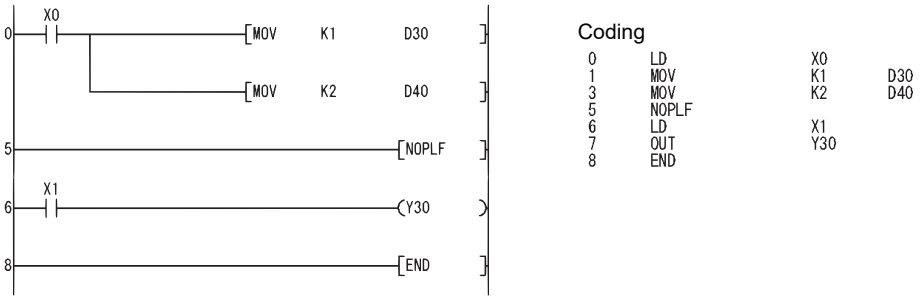

- Printing the ladder will result in the following:

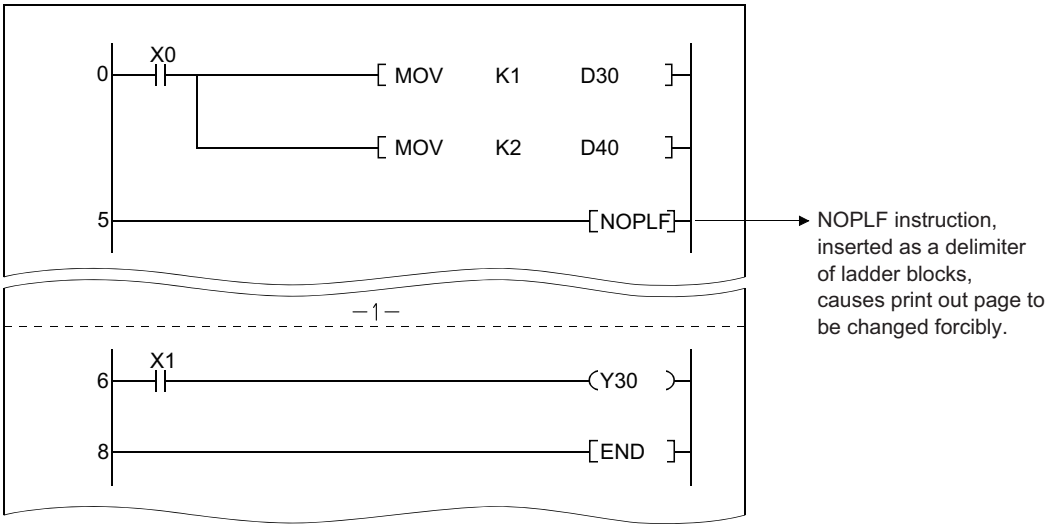

- Printing an instruction list with the NOPLF instruction will result in the following:

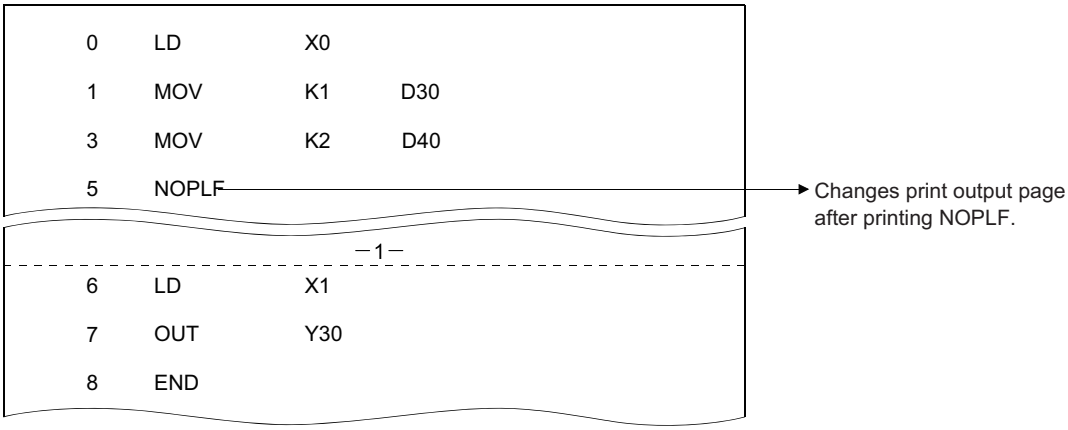

PAGE n

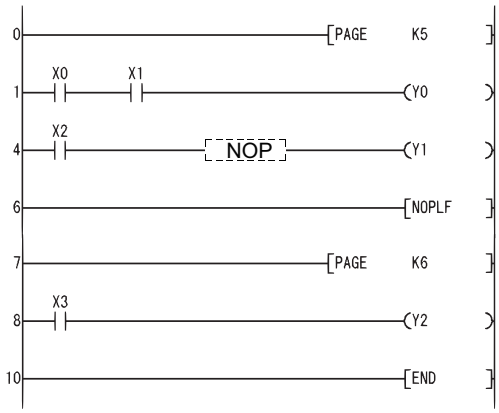

Coding

0	PAGE	K5
1	LD	X0
2	AND	X1
3	OUT	Y0
4	LD	X2
5	NOP	
6	OUT	Y1
7	NOPLF	
8	PAGE	K6
9	LD	X3
10	OUT	Y2
11	END	

3.26 Basic instruction (16-bit)

The basic instruction (16-bit) can handle 16 bits of numeric data.

3.26.1 Comparison operation instruction

- Comparison operation instructions execute size comparisons (=, >, < etc.) of two data, and instructs a contact to turn ON when the conditions are met.

- The usage method of comparison operation instructions is the same as the contact instructions of sequence instructions, and is as follows.

LD, LDI: LD=
AND, ANI: AND=
OR, ORI: OR=

- There are 18 types of comparison operation instruction as shown below. For details, refer to page 164.

Classification	Instruction symbol	Classification	Instruction symbol	Classification	Instruction symbol
=	LD=	>	LD>	<	LD<
	AND=		AND>		AND<
	OR=		OR>		OR<
≠	LD<>	≤	LD<=	≥	LD>=
	AND<>		AND<=		AND>=
	OR<>		OR<=		OR>=

- The conditions for turning comparison operation instructions ON are as follows.

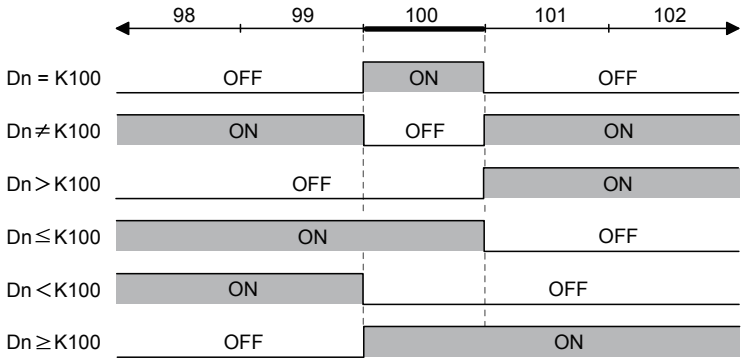

NOTE

- The comparison instruction assumes the specified data as a BIN value for comparison. For this reason, when performing hexadecimal comparison, when the value whose most significant bit (b15) is 1 (8 to F), the BIN value is assumed as a negative number for the comparison.

Ex.

Comparison of HEX / 4-digit value

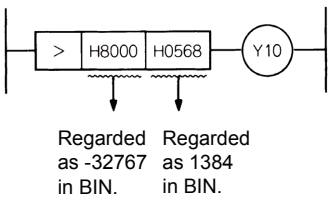

Therefore, -32767 < 1384, and Y10 does not turn ON.

3.26.2 Comparison operation instruction: 16-bit data comparison ... =, <>, >, <=, <, >=

	Applicable device									Digit specification	Error flag
	Bit device			Word (16-bit) device			Constant		Level		
	X	Y	M	T	C	D	K	H	N		(SM0)
(S1)	○	○	○	○	○	○	○	○		K1 to K4	○
(S2)	○	○	○	○	○	○	○	○			

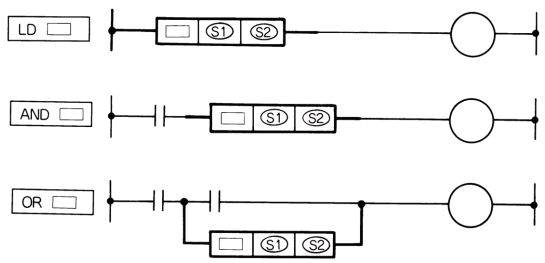

Instruction symbol inside

=, <>, >, <=, <, >=

Setting data

(S1)	Start number of the comparison data or the device in which the comparison data is stored
(S2)	

◆ Function

- 16-bit comparison operation is handled as NO contact.
- Comparison operation results are as follows.

Instruction symbol inside	Condition	Comparison operation results
=	(S1) = (S2)	Conducted
<>	(S1) ≠ (S2)	
>	(S1) > (S2)	
<=	(S1) ≤ (S2)	
<	(S1) < (S2)	
>=	(S1) ≥ (S2)	

Instruction symbol inside	Condition	Comparison operation results
=	(S1) ≠ (S2)	Not conducted
<>	(S1) = (S2)	
>	(S1) ≤ (S2)	
<=	(S1) > (S2)	
<	(S1) ≥ (S2)	
>=	(S1) < (S2)	

◆ Execution condition

The execution conditions for LD , AND and OR are as follows.

Instruction	Execution condition
LD	Each scan execution
AND	Executed when the previous contact instruction is ON
OR	Each scan execution

NOTE

- When the digit setting of a bit device is other than K4 and a start bit device value is other than a multiple of 8, the number of steps is 7.

◆ Program example

=

Program that compares the X0 to F data with D3 data.

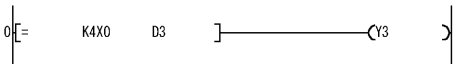

· Coding

```
0  LD=     K4X0   D3
5  OUT     Y3
6  END
```

<>

Program that compares the BCD value 100 with D3 data.

· Coding

```
0  LD      M3
1  AND<>   H100   D3
6  OUT     Y3
7  END
```

>

Program that compares the BIN value 100 with D3 data.

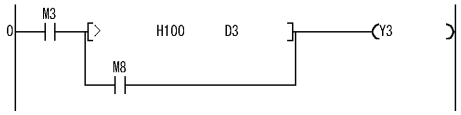

· Coding

```
0  LD      M3
1  LD>     H100   D3
6  OR      M8
7  ANB
8  OUT     Y3
9  END
```

<=

Program that compares the D0 with D3 data.

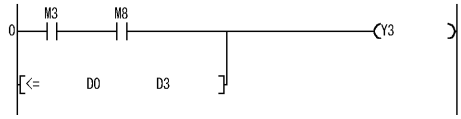

· Coding

```
0  LD      M3
1  AND     M8
2  OR<=    D0     D3
7  OUT     Y3
8  END
```

3.26.3 Arithmetic operation instruction

An arithmetic operation instruction instructs the addition, subtraction, multiplication or division for two BIN data, or operation of increment or decrement.

◆ BIN arithmetic operation (binary)

- If the operation result of an addition instruction exceeds 32767, the value is negative.
- If the operation result of a subtraction instruction is smaller than -32768, the value is positive.
- Operations of positive values and negative values are as follows.

5 + 8 → 13
5 - 8 → -3
5 × 3 → 15
-5 × 3 → -15
-5 × (-3) → 15
-5 ÷ 3 → -1 remainder -2
5 ÷ (-3) → -1 remainder 2
-5 ÷ (-3) → 1 remainder -2

3.26.4 Arithmetic operation instruction: BIN 16-bit addition/ subtraction ... +, +P, -, -P

	Applicable device									Digit specification	Error flag
	Bit device			Word (16-bit) device			Constant		Level		
	X	Y	M	T	C	D	K	H	N		(SM0)
(S)	○	○	○	○	○	○	○	○		K1 to K4	○
(D)		○	○	○	○	○					
(S1)	○	○	○	○	○	○	○	○			
(S2)	○	○	○	○	○	○	○	○			
(D1)		○	○	○	○	○					

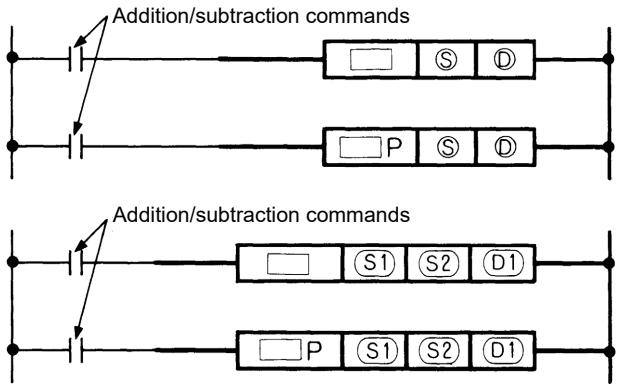

Instruction symbol inside

+, -

Setting data

(S)	Start number of the addition/ subtraction data or the device in which the addition/subtraction data is stored
(D)	Start number of the device in which the added/subtracted data is stored
(S1)	Start number of the added/ subtracted data or the device in which the added/subtracted data is stored
(S2)	Start number of the addition/ subtraction data or the device in which the addition/subtraction data is stored
(D1)	Start number of the device in which the addition/subtraction results are stored

◆ Function

+

- Executes addition of the BIN data specified with Ⓓ and BIN data specified with Ⓢ, and stores the addition results in the device specified with Ⓓ.

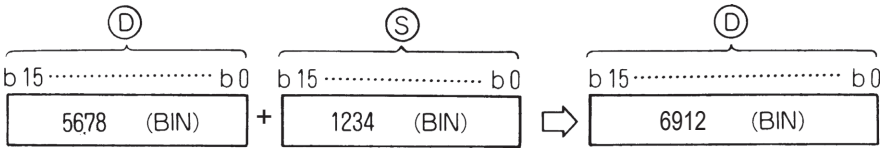

- Executes addition of the BIN data specified with Ⓢ1 and BIN data specified with Ⓢ2, and stores it in the device specified with Ⓓ1.

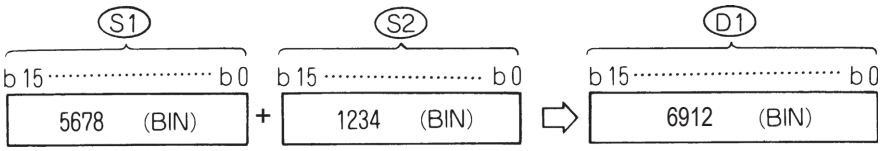

- -32768 to 32767 (BIN 16-bit) can be specified in Ⓢ, Ⓢ1, Ⓢ2 or Ⓓ.
- Positive/negative judgment of the Ⓢ, Ⓢ1, Ⓢ2 and Ⓓ data is performed by the most significant bit (b15). (0: positive, 1: negative)
- The carry flag does not turn ON for the 0-bit underflow. The carry flag does not turn ON for the 15th bit overflow. (There is no carry flag)

◆ Function

-

- Executes subtraction of the BIN data specified with Ⓓ and BIN data specified with Ⓢ, and stores the subtraction results in the device specified with Ⓓ.

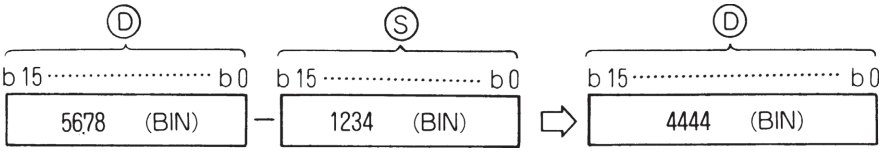

- Executes subtraction of the BIN data specified with Ⓢ1 and BIN data specified with Ⓢ2, and stores it in the device specified with Ⓓ1.

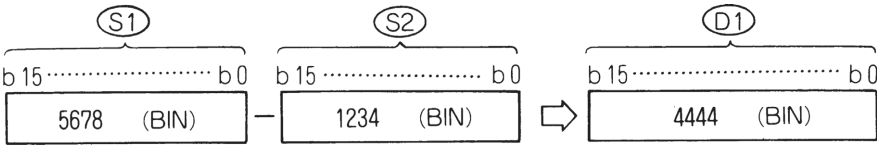

- -32768 to 32767 (BIN 16-bit) can be specified in Ⓢ, Ⓢ1, Ⓢ2 or Ⓓ.
- Positive/negative judgment of the Ⓢ, Ⓢ1, Ⓢ2 and Ⓓ data is performed by the most significant bit (b15). (0: Positive, 1: negative)
- The carry flag does not turn ON for the 0-bit underflow. The carry flag does not turn ON for the 15th bit overflow. (There is no carry flag)

◆ Execution condition

Addition/subtraction instruction

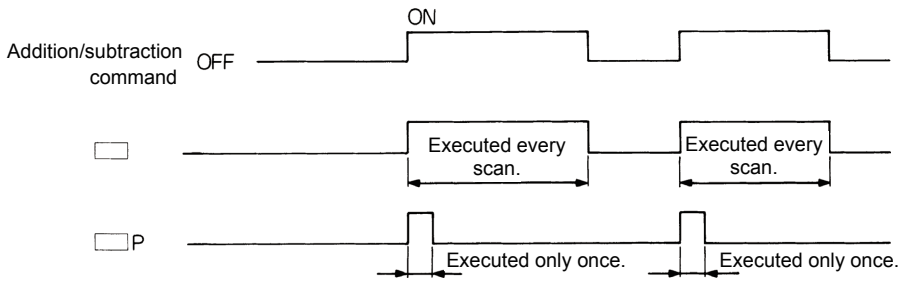

◆ Program example

Program that adds the content of D3 to the content of D0 when X5 turns ON, and outputs the results to Y38 to 3F.

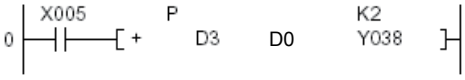

• Coding

```
0  LD    X005
1  +P    D3    D0    K2Y038
8  END
```

3.26.5 Arithmetic operation instruction: BIN 16-bit multiplication/division ... *, *P, /, /P

	Applicable device									Digit specification	Error flag
	Bit device			Word (16-bit) device			Constant		Level		
	X	Y	M	T	C	D	K	H	N		(SM0)
(S1)	○	○	○	○	○	○	○	○		K1 to K4	○
(S2)	○	○	○	○	○	○	○	○			
(D)		○	○	○	○	○					

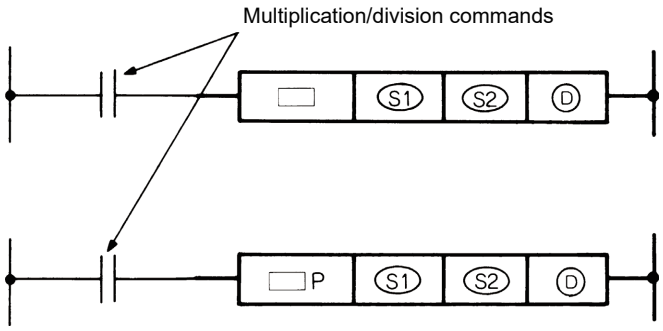

Instruction symbol inside

*, /

Setting data

(S1)	Start number of the multiplied/divided data or the device in which the multiplied/divided data is stored
(S2)	Start number of the multiplication/division data or the device in which the multiplication/division data is stored
(D)	Start number of the device in which the multiplication/division results are stored

◆ Function

*

- Executes multiplication of the BIN data specified with (S1) and BIN data specified with (S2), and stores the multiplication results in the device specified with (D).

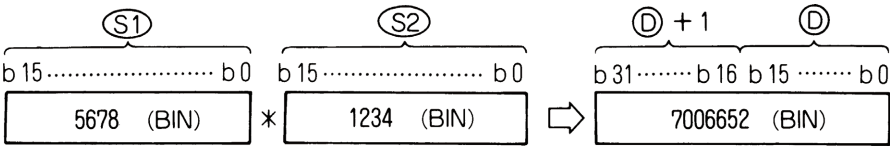

- When (D) is a bit device, specify from the lower bits.

Ex.

K1: Lower 4 bits (b0 to 3)

K4: Lower 16 bits (b0 to 15)

- -32768 to 32767 (BIN 16-bit) can be specified in (S1) or (S2).
- Positive/negative judgment of the data is performed by the most significant bit (b15) for (S1) and (S2), and (b31) for (D). (0: Positive, 1: negative)

/

- Executes division of the BIN data specified with (S1) and BIN data specified with (S2), and stores the division results in the device specified with (D).

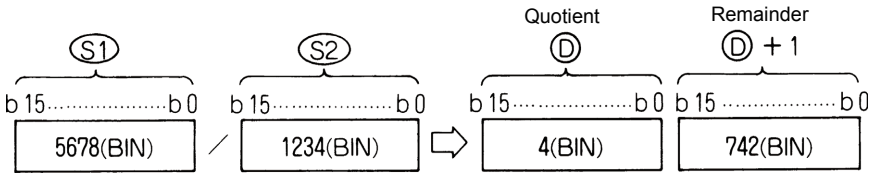

- The division results are stored as the quotient and remainder using 32 bits for a word device, or stored as only the quotient using 16 bits for a bit device.

Quotient: Stored in the lower 16 bits.

Remainder: Stored in the upper 16 bits. (Only stored for word devices.)

- -32768 to 32767 (BIN 16-bit) can be specified in (S1) or (S2).
- Positive/negative judgment of the (S1), (S2), (D) and (D)+1 data is performed by the most significant bit (b15). (Both quotient and remainder have a sign.) (0: positive, 1: negative)

◆ Execution condition

The execution conditions for multiplication/division instructions are as follows.

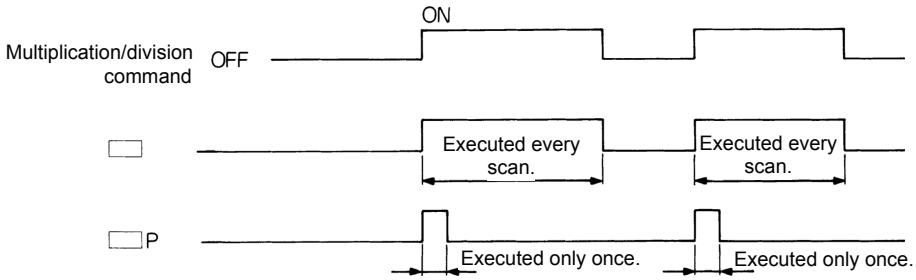

◆ Operation error

An operation error occurs in the following cases, and the error flag turns ON.

- When A1 or V are specified for Ⓓ.
- When the divisor Ⓢ2 is 0.

◆ Program example

*

- Program that stores the multiplication results of BIN 5678 and 1234 in D3 and 4 when X5 turns ON.

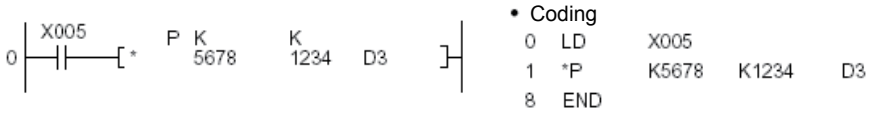

/

- Program that outputs the results of dividing the X8 to F data by 3.14 to Y30 to 3F when X3 turns ON.

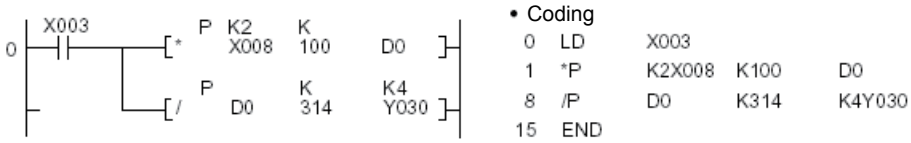

3.26.6 Arithmetic operation instruction: BIN 16-bit data increment/decrement ... INC, INCP, DEC, DECP

		Applicable device									Digit specification	Error flag
		Bit device			Word (16-bit) device			Constant		Level		
		X	Y	M	T	C	D	K	H	N		(SM0)
INC, INCP, DEC, DECP	Ⓓ	○	○	○	○	○	○				K1 to K4	○

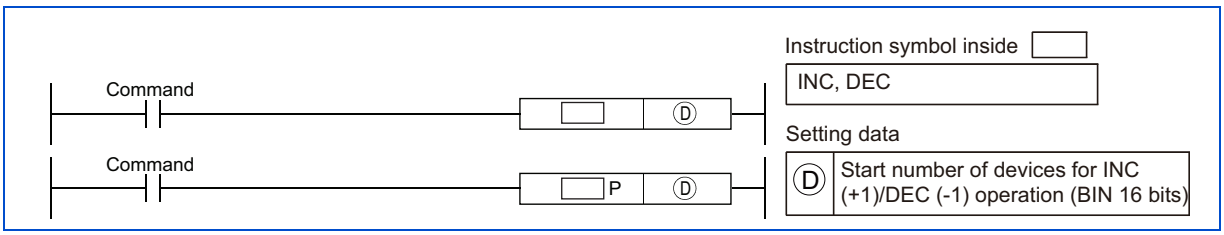

◆ Function

INC

- Adds 1 to the device designated by Ⓓ (16-bit data).

- When INC/INCP operation is executed for the device designated by Ⓓ, whose content is 32767, the value -32768 is stored at the device designated by Ⓓ.

DEC

- Subtracts 1 from the device designated by Ⓓ (16-bit data).

- When DEC/DECP operation is executed for the device designated by , whose content is -32768, the value 32767 is stored at the device designated by Ⓓ.

◆ Program Example

- The following is a down counter program.

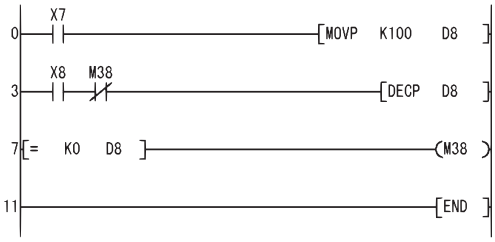

Transfers 100 to D8 when X7 goes ON.

In the state M38=OFF, decrement at D8 (D8 - 1) is executed when X8 goes from OFF to ON.

At D8=0, M38 goes ON.

Coding

```
0   LD     X7
1   MOVP   K100
3   LD     X8
4   ANI    M38
5   DECP   D8
7   LD=    K0
10  OUT    M38
11  END
```

3.26.7 Data transfer instruction

The data transfer instruction is an instruction that executes the transfer of data.
Data transferred by the data transfer instruction is retained until new data is transferred.

3.26.8 Data transfer instruction: 16-bit data transfer ... MOV, MOVP

		Applicable device									Digit specification	Error flag
		Bit device			Word (16-bit) device			Constant		Level		
		X	Y	M	T	C	D	K	H	N		(SM0)
MOV, MOVP	Ⓢ	○	○	○	○	○	○	○	○		K1 to K4	○
	Ⓓ		○	○	○	○	○					

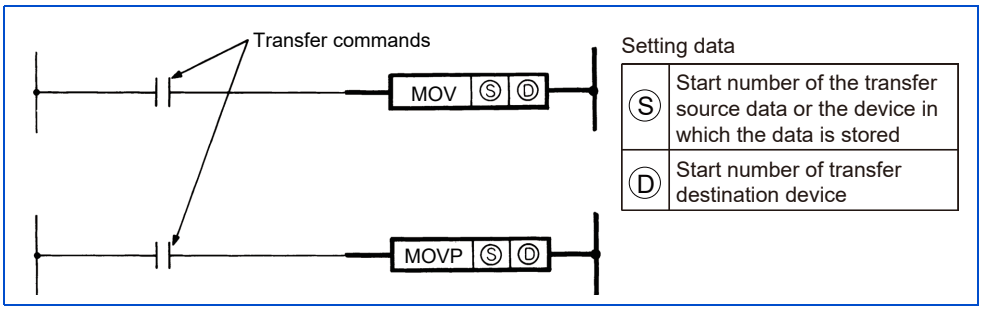

◆ Function

MOV

16-bit data from the device specified with Ⓢ is transferred to the device specified with Ⓓ.

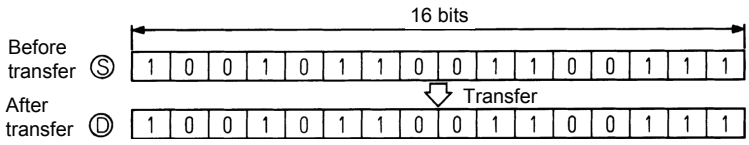

◆ Execution condition

The execution conditions for transfer instructions are as follows.

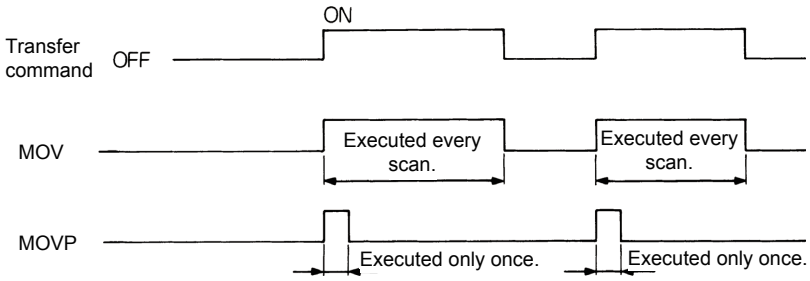

◆ Program example

MOV

- Program that stores 155 as a binary value in D8 when X8 turns ON.

· Coding

```
0  LD    X8
1  MOVP  K155   D8
6  END
```

3.26.9 Data conversion instruction: 2's complements of BIN 16-bit data ... NEG, NEGP

		Applicable device									Digit specification	Error flag
		Bit device			Word (16-bit) device			Constant		Level		
		X	Y	M	T	C	D	K	H	N		(SM0)
NEG	Ⓓ		○	○	○	○	○	○	○		K1 to K4	○

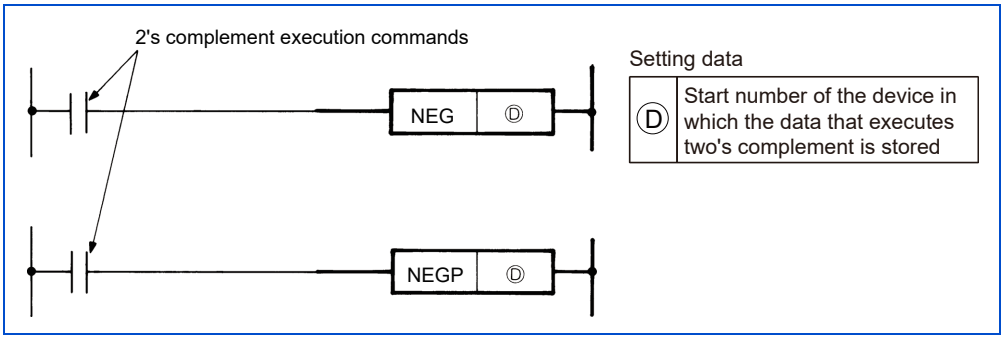

◆ Function

- Invert the sign of the 16-bit device specified with Ⓓ, and store the device specified with Ⓓ.

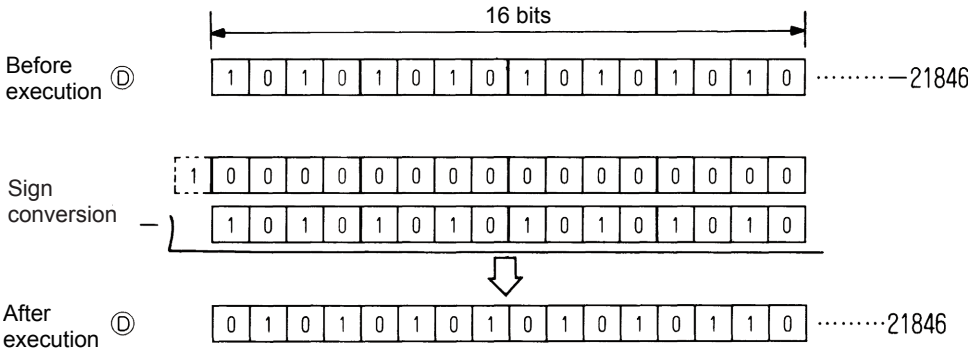

- This is used when inverting the positive/negative signs.

◆ Execution condition

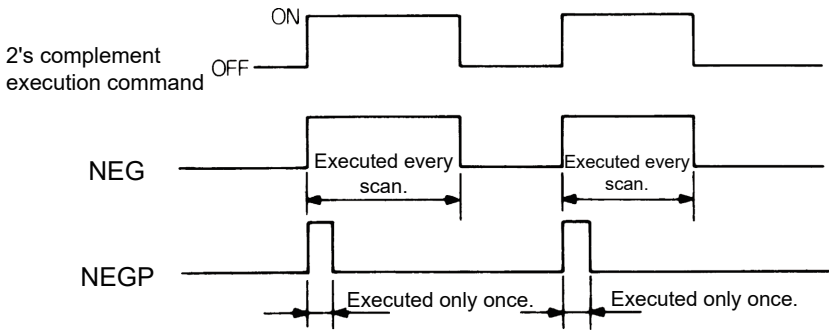

◆ Program example

NEG

- Program that calculates D10 to D20 when XA is turned ON, and calculates the absolute value when this result is negative.

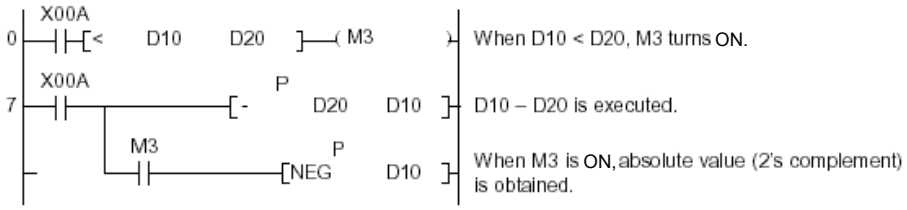

• Coding

```
 0  LD      X00A
 1  AND<    D10     D20
 6  OUT     M3
 7  LD      X00A
 8  -P      D20     D10
13  AND     M3
14  NEGP    D10
17  END
```

3.26.10 Data conversion instructions: BIN 16-bit data BCD conversions ... BCD, BCDP

		Applicable device									Digit specification	Error flag
		Bit device			Word (16-bit) device			Constant		Level		
		X	Y	M	T	C	D	K	H	N		(SM0)
BCD BCDP	Ⓢ	○	○	○	○	○	○	○	○		K1 to K4	○
	Ⓓ	○	○	○	○	○	○					

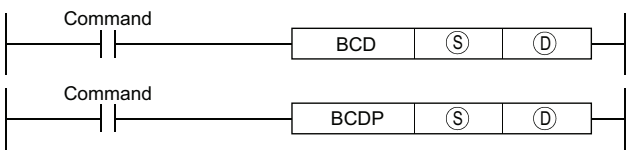

Setting data

Ⓢ	BIN data or start number of the devices where the BIN data is stored (BIN 16 bits)
Ⓓ	Start number of the devices where BCD data will be stored (BCD 4 digits)

◆ Function

BCD

- Converts BIN data (0 to 9999) at the device designated by Ⓢ to BCD data, and stores it at the device designated by Ⓓ.

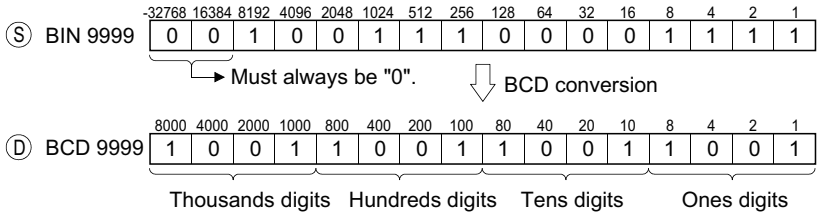

3.26.11 Data conversion instructions: BIN 16-bit data BIN conversions ... BIN, BINP

		Applicable device									Digit specification	Error flag
		Bit device			Word (16-bit) device			Constant		Level		
		X	Y	M	T	C	D	K	H	N		(SM0)
BIN BINP	Ⓢ	○	○	○	○	○	○	○	○		K1 to K4	○
	Ⓓ	○	○	○	○	○	○					

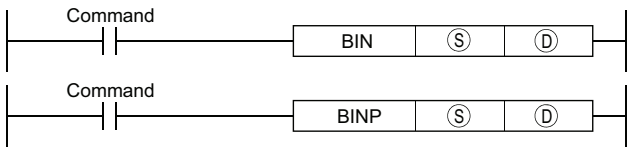

Setting data

Ⓢ	BCD data or start number of the devices where the BCD data is stored (BCD 4 digits)
Ⓓ	Start number of the devices where BIN data will be stored (BIN 16 bits)

◆ Function

BIN

- Converts BCD data (0 to 9999) at device designated by Ⓢ to BIN data, and stores at the device designated by Ⓓ.

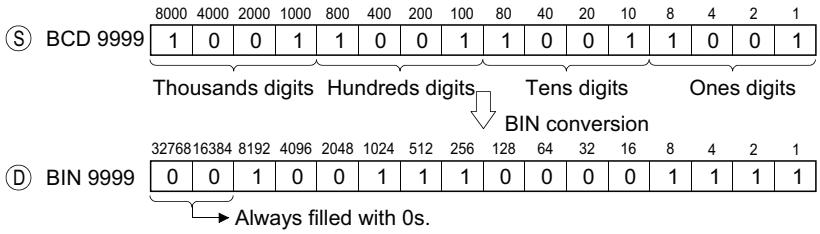

3.27 Basic instruction (32-bit)

The basic instruction (32-bit) is an instruction that can handle numeric data that is expressed in 32 bits.

3.27.1 Comparison operation instruction

- Comparison operation instructions execute size comparisons (D=, D>, D< etc.) of two data, and instructs the contact to turn ON when the conditions are met.

- The usage method of comparison operation instructions is the same as the contact instructions of sequence instructions, and is as follows.

LD, LDI.....LDD=
AND, ANI...ANDD=
OR, ORI.....ORD=

- There are 18 types of comparison operation instruction as shown below. For details, refer to page 180.

Classification	Instruction symbol	Classification	Instruction symbol	Classification	Instruction symbol
=	LDD=	>	LDD>	<	LDD<
	ANDD=		ANDD>		ANDD<
	ORD=		ORD>		ORD<
≠	LDD<>	≤	LDD<=	≥	LDD>=
	ANDD<>		ANDD<=		ANDD>=
	ORD<>		ORD<=		ORD>=

- The conditions for turning comparison operation instructions ON are as follows.

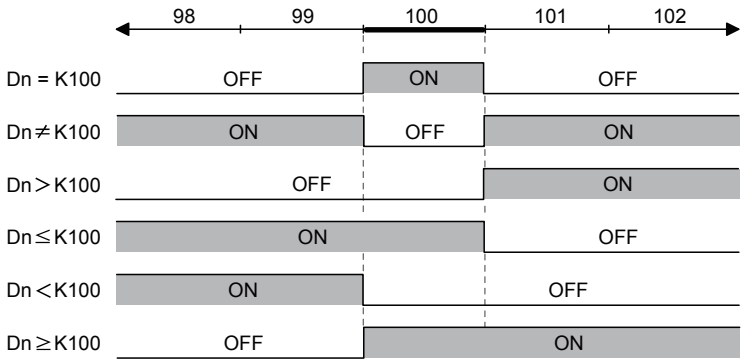

NOTE

- The comparison instruction assumes the specified data as a BIN value for comparison. For this reason, when performing hexadecimal comparison, when the value whose most significant bit (b31) is 1 (8 to F), the BIN value is assumed as a negative number for the comparison.

Ex.

Comparison of HEX/8 digit value

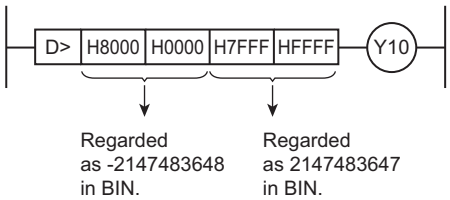

Therefore, -2147483648 < -2147483647, and Y10 does not turn ON.

3.27.2 Comparison operation instruction: 32-bit data comparison ... D=, D<>, D>, D<=, D<, D>=

	Applicable device									Digit specification	Error flag
	Bit device			Word (16-bit) device			Constant		Level		
	X	Y	M	T	C	D	K	H	N		(SM0)
(S1)	○	○	○	○	○	○	○	○		K1 to K8	○
(S2)	○	○	○	○	○	○	○	○			

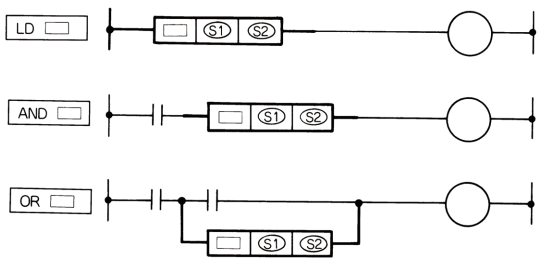

Instruction symbol inside

D=, D<>, D>, D<=, D<, D>=

Setting data

(S1)	Start number of the comparison data or the device in which the data is stored
(S2)	

◆ Function

- 32-bit comparison operation handled as NO contact.
- Comparison operation results are as follows.

Instruction symbol inside	Condition	Comparison operation results
D=	(S1) = (S2)	Conducted
D<>	(S1) ≠ (S2)	
D>	(S1) > (S2)	
D<=	(S1) ≤ (S2)	
D<	(S1) < (S2)	
D>=	(S1) ≥ (S2)	

Instruction symbol inside	Condition	Comparison operation results
D=	(S1) ≠ (S2)	Not conducted
D<>	(S1) = (S2)	
D>	(S1) ≤ (S2)	
D<=	(S1) > (S2)	
D<	(S1) ≥ (S2)	
D>=	(S1) < (S2)	

◆ Execution condition

The execution conditions for LD , AND and OR are as follows.

Instruction	Execution condition
LD	Each scan execution
AND	Executed when the previous contact instruction turns ON.
OR	Each scan execution

NOTE

- When the digit setting of a bit device is other than K8 and a start bit device value is other than a multiple of 8, the number of steps is 7.

◆ Program example

D=

Program that compares the M0 to 31 data with D3 and D4 data.

· Coding

```
 0   LDD=    K8M0    D3
11   OUT     Y0
12   END
```

D<>

Program that compares the BCD value 18000 with D3 and D4 data.

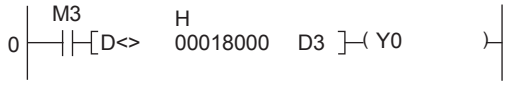

· Coding

```
 0   LD      M3
 1   ANDD<>  H00018000   D3
12   OUT     Y0
13   END
```

D>

Program that compares the BIN value -80000 with D3 and D4 data.

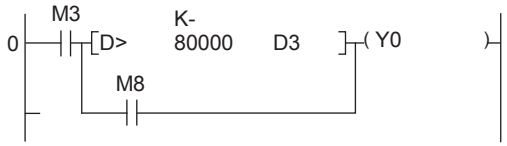

· Coding

```
 0   LD      M3
 1   LDD>    K-80000     D3
12   OR      M8
13   ANB
14   OUT     Y0
15   END
```

D<=

Program that compares D0 and D1 with D3 and D4 data.

· Coding

```
 0   LD      M3
 1   AND     M8
 2   ORD<=   D0          D3
13   OUT     Y0
14   END
```

3.27.3 Arithmetic operation instruction

An arithmetic operation instruction instructs the addition, subtraction, multiplication or division for two BIN data, or operation of increment or decrement.

◆ BIN arithmetic operation (binary)

- If the operation result of an addition instruction exceeds 2147483647, the value is negative.
- If the operation result of a subtraction instruction is smaller than -2147483648, the value is positive.
- Operations of positive values and negative values are as follows.

5 + 8 → 13
5 - 8 → -3
5 × 3 → 15
-5 × 3 → -15
-5 × (-3) → 15
-5 ÷ 3 → -1 remainder -2
5 ÷ (-3) → -1 remainder 2
-5 ÷ (-3) → 1 remainder -2

3.27.4 Arithmetic operation instruction: BIN 32-bit addition/ subtraction ... D+, D+P, D-, D-P

	Applicable device									Digit specification	Error flag
	Bit device			Word (16-bit) device			Constant		Level		
	X	Y	M	T	C	D	K	H	N		(SM0)
Ⓢ	○	○	○	○	○	○	○	○		K1 to K8	○
Ⓓ		○	○	○	○	○					
Ⓢ1	○	○	○	○	○	○	○	○			
Ⓢ2	○	○	○	○	○	○	○	○			
Ⓓ1		○	○	○	○	○					

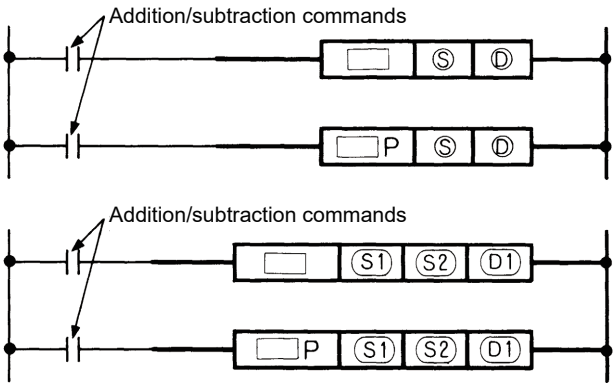

Instruction symbol inside

D+, D-

Setting data

Ⓢ	Start number of the addition/ subtraction data or the device in which the addition/subtraction data is stored
Ⓓ	Start number of the device in which the added/subtracted data is stored
Ⓢ1	Start number of the added/subtracted data or the device in which the added/ subtracted data is stored
Ⓢ2	Start number of the addition/ subtraction data or the device in which the addition/subtraction data is stored
Ⓓ1	Start number of the device in which the addition/subtraction results are stored

◆ Function

D+

- Executes addition of the BIN data specified with Ⓓ and BIN data specified with Ⓢ, and stores the addition results in the device specified with Ⓓ.

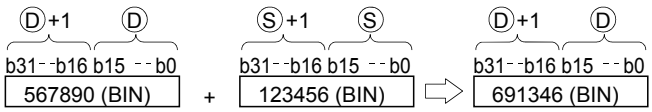

- Executes addition of the BIN data specified with Ⓢ1 and BIN data specified with Ⓢ2, and stores the addition results in the device specified with Ⓓ1.

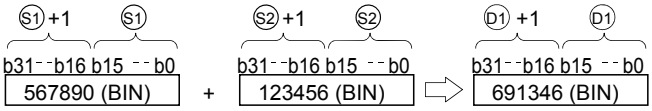

- -2147483648 to 2147483647 (BIN 32-bit) can be specified in Ⓢ, Ⓢ1, Ⓢ2 or Ⓓ.
- Positive/negative judgment of the Ⓢ, Ⓢ1, Ⓢ2 and Ⓓ data is performed by the most significant bit (b31). (0: positive, 1: negative)
- The carry flag does not turn ON for the 0-bit underflow. The carry flag does not turn ON for the 31st bit overflow. (There is no carry flag.)

◆ Function

D-

- Executes subtraction of the BIN data specified with Ⓓ and BIN data specified with Ⓢ, and stores the subtraction results in the device specified with Ⓓ.

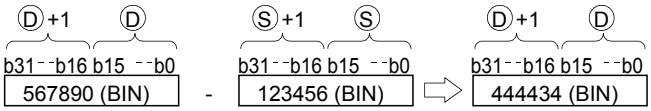

- Executes subtraction of the BIN data specified with Ⓢ1 and BIN data specified with Ⓢ2, and stores the subtraction results in the device specified with Ⓓ1.

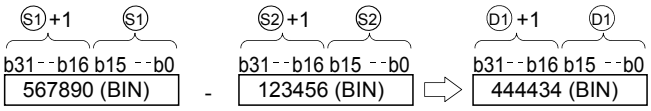

- -2147483648 to 2147483647 (BIN 32-bit) can be specified in Ⓢ, Ⓢ1, Ⓢ2 or Ⓓ.
- Positive/negative judgment of the Ⓢ, Ⓢ1, Ⓢ2 and Ⓓ data is performed by the most significant bit (b31). (0: positive, 1: negative)
- The carry flag does not turn ON for the 0-bit underflow. The carry flag does not turn ON for the 31st bit overflow. (There is no carry flag)

◆ Execution condition

Addition/subtraction instruction

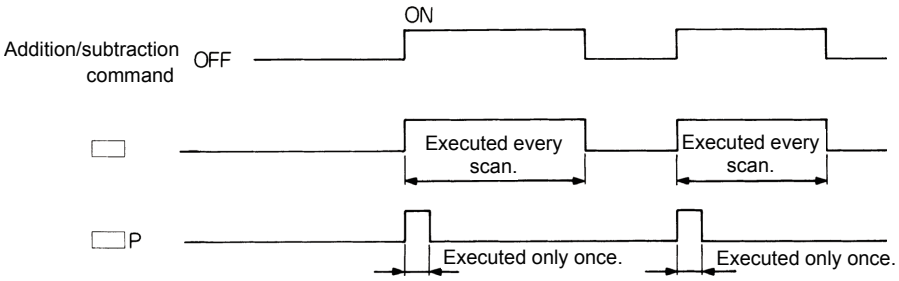

◆ Program example

D+

Program that adds the X10 to X2B 28-bit data to the D9 and D10 data when X0 turns ON, and outputs the results to M0 to M27.

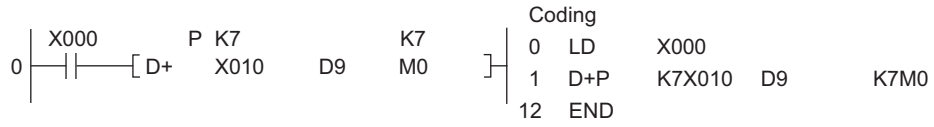

D-

Program that subtracts the M0 to M23 data from the D0 and D1 data when X0 turns ON, and stores the results in D10 and D11.

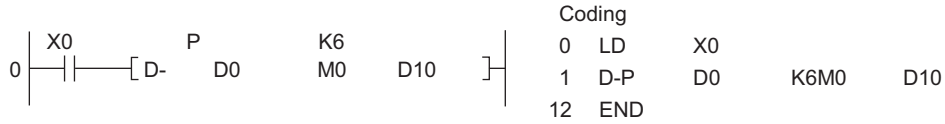

3.27.5 Arithmetic operation instruction: BIN 32-bit multiplication/division ... D*, D*P, D/, D/P

	Applicable device									Digit specification	Error flag
	Bit device			Word (16-bit) device			Constant		Level		
	X	Y	M	T	C	D	K	H	N		(SM0)
(S1)	○	○	○	○	○	○	○	○		K1 to K8	○
(S2)	○	○	○	○	○	○	○	○			
(D)		○	○	○	○	○					

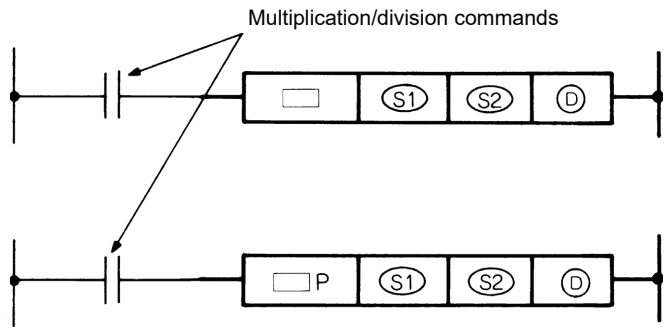

Instruction symbol inside

D*, D/

Setting data

(S1)	Start number of the multiplied/divided data or the device in which the multiplied/divided data is stored
(S2)	Start number of the multiplication/division data or the device in which the multiplication/division data is stored
(D)	Start number of the device in which the multiplication/division results are stored

◆ Function

D *

- Executes multiplication of the BIN data specified with (S1) and BIN data specified with (S2), and stores the results in the device specified with (D)

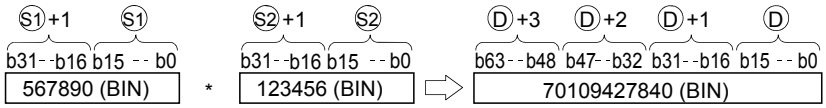

- When (D) is a bit device, specify from the lower bits.

Ex.

K1: Lower 4 bits (b0 to 3)

K4: Lower 16 bits (b0 to 15)

K8: Lower 32 bits (b0 to 31)

- -2147483648 to 2147483647 (BIN 32-bit) can be specified in (S1) or (S2).
- Positive/negative judgment of the data is performed by the most significant bit (b31) for (S1) and (S2), and (b63) for (D). (0: positive, 1: negative)

D/

- Executes division of the BIN data specified with Ⓢ1 and BIN data specified with Ⓢ2, and stores the results in the device specified with Ⓓ.

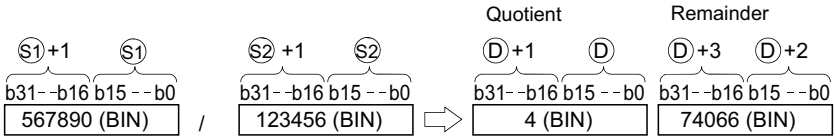

- The division results are stored as the quotient and remainder using 64 bits for a word device, or stored as only the quotient using 32 bits for a bit device.

Quotient: Stored in the lower 32 bits.

Remainder: Stored in the upper 32 bits. (Only stored for word devices.)

- -2147483648 to 2147483647 (BIN 32-bit) can be specified in Ⓢ1 or Ⓢ2.
- Positive/negative judgment of the Ⓢ1, Ⓢ2, Ⓓ and Ⓓ+2 data is performed by the most significant bit (b31). (Both quotient and remainder have a sign.) (0: positive, 1: negative)

◆ Execution condition

The execution conditions for multiplication/division instructions are as follows.

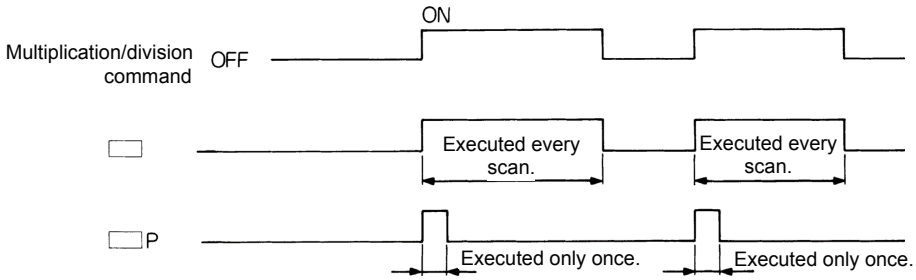

◆ Operation error

An operation error occurs in the following cases, and the error flag turns ON.

- When A1 or V is specified in (S1) or (S2), or A0, A1, Z or V are specified in (D).
- When the divisor (S2) is 0.

◆ Program example

D *

Program that stores the results of multiplying D7 and D8 BIN data with D18 and D19 BIN data in D1 to D4 when X5 turns ON.

```
Coding
 0   LD      X005
 1   D*P     D7      D18     D1
12   END
```

D/

Program that outputs the result of multiplying M0 to 7 by 3.14 to D3 when X3 turns ON.

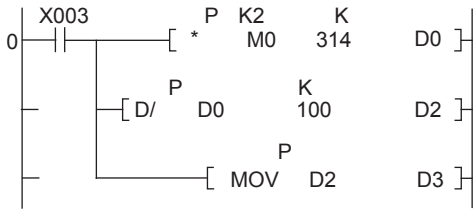


```
Coding
 0   LD      X003
 1   *P      K2M0    K314    D0
 8   D/P     D0              K100    D2
19   MOVP    D2      D3
24   END
```

3.27.6 Arithmetic operation instruction: BIN 32-bit data increment/decrement ... DINC, DINCP, DDEC, DDECP

		Applicable device									Digit specification	Error flag
		Bit device			Word (16-bit) device			Constant		Level		
		X	Y	M	T	C	D	K	H	N		(SM0)
DINC, DINCP, DDEC, DDECP	Ⓓ	○	○	○	○	○	○				K1 to K8	○

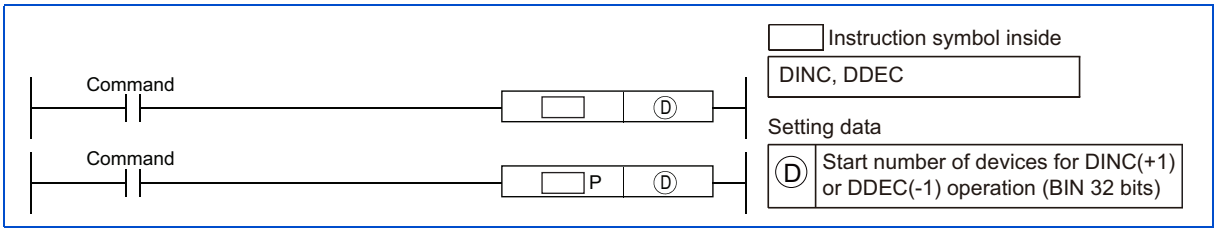

◆ Function

DINC

- Adds 1 to the device designated by Ⓓ (32-bit data).

- When DINC/DINCP operation is executed for the device designated by Ⓓ, whose content is 2147483647, the value -2147483648 is stored at the device designated by Ⓓ.

DDEC

- Subtracts -1 from the device designated by Ⓓ (32-bit data).

- When DDEC/DDECP operation is executed for the device designated by Ⓓ, whose content is 0, the value -1 is stored at the device designated by Ⓓ.

◆ Program example

- The following program adds 1 to the data at D0 and D1 when X0 is ON.

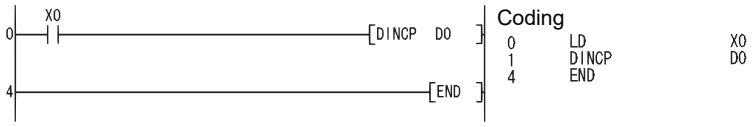

- The following program subtracts 1 from the data at D0 and D1 when X0 goes ON.

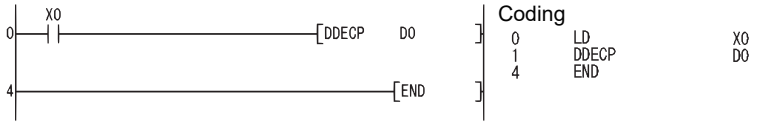

3.27.7 Data transfer instruction

The data transfer instruction is an instruction that executes the transfer of data.
Data transferred by the data transfer instruction is retained until new data is transferred.

3.27.8 Data transfer instruction: 32-bit data transfer ... DMOV, DMOVP

		Applicable device									Digit specification	Error flag
		Bit device			Word (16-bit) device			Constant		Level		
		X	Y	M	T	C	D	K	H	N		(SM0)
DMOV, DMOVP	Ⓢ	○	○	○	○	○	○	○	○		K1 to K8	○
	Ⓓ		○	○	○	○	○					

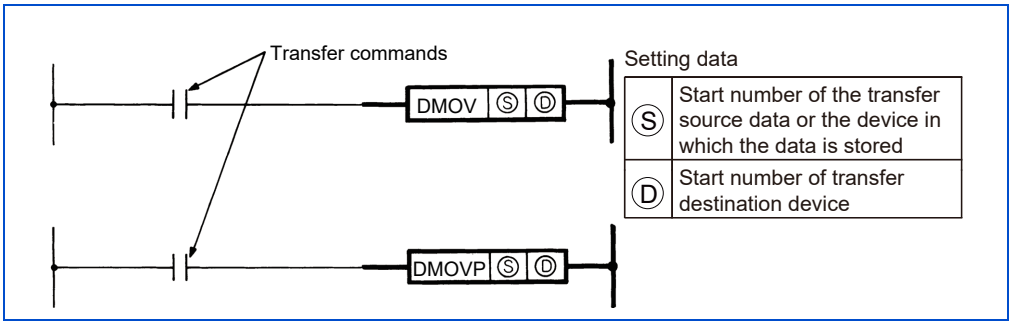

◆ Function

DMOV

32-bit data from the device specified with Ⓢ is transferred to the device specified with Ⓓ.

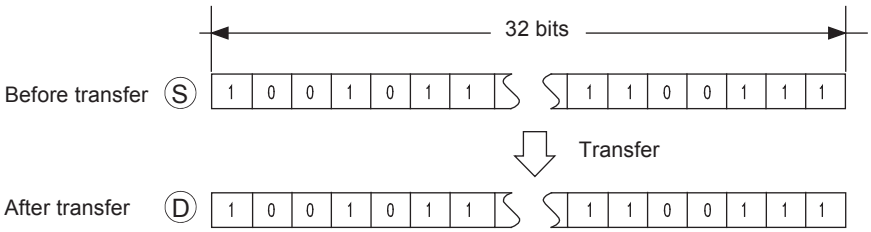

◆ Execution condition

The execution conditions for transfer instructions are as follows.

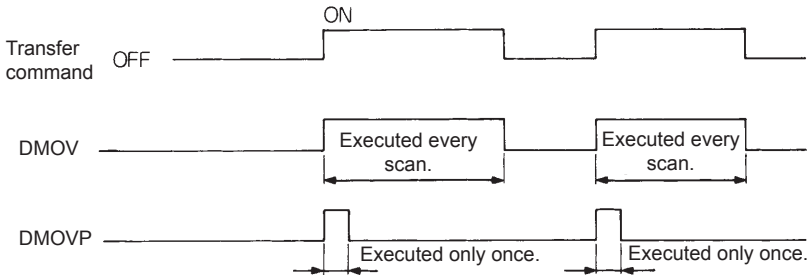

◆ Program example

DMOV

- Program that stores the input D2 to D3 data in D0 and D1.

· Coding

```
0   L       M32
1   DMOVP   D2      D0
8   END
```

- Program that stores M0 to M31 data in D0 and D1.

· Coding

```
0   LD      M32
1   DMOVP   K8M0    D0
8   END
```

3.27.9 Data conversion instruction: 2's complements of BIN 32-bit data ... DNEG, DNEGP

		Applicable device									Digit specification	Error flag
		Bit device			Word (16-bit) device			Constant		Level		
		X	Y	M	T	C	D	K	H	N		(SM0)
DNEG(P)	Ⓓ		○	○	○	○	○	○	○		K1 to K8	○

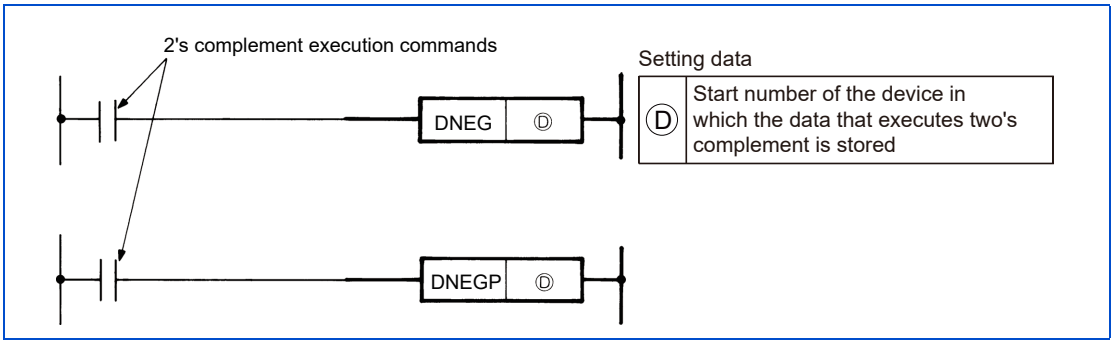

◆ Function

- Invert the sign of the 32-bit device specified with Ⓓ, and store the device specified with Ⓓ.

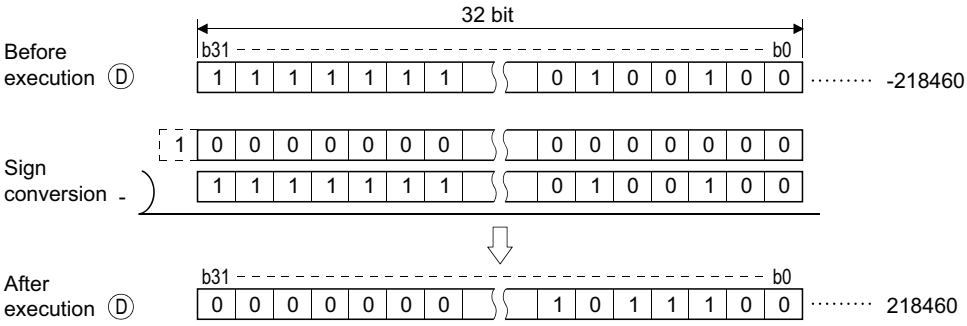

- This is used when inverting the positive/negative signs.

◆ Execution condition

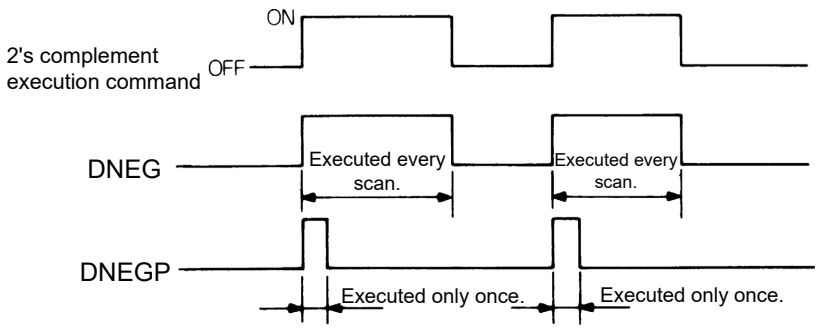

3.27.10 Data conversion instructions: BIN 32-bit data BCD conversions ... DBCD, DBCDP

		Applicable device									Digit specification	Error flag
		Bit device			Word (16-bit) device			Constant		Level		
		X	Y	M	T	C	D	K	H	N		(SM0)
DBCD DBCDP	Ⓢ	○	○	○	○	○	○	○	○		K1 to K8	○
	Ⓓ	○	○	○	○	○	○					

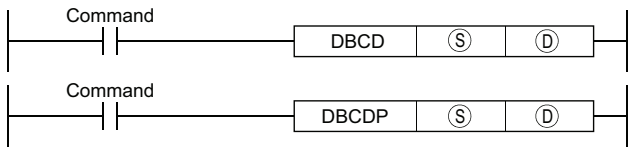

Setting data

Ⓢ	BIN data or start number of the devices where the BIN data is stored (BIN 32 bits)
Ⓓ	Start number of the devices where BCD data will be stored (BCD 8 digits)

◆ Function

DBCD

- Converts BIN data (0 to 99999999) at the device designated by Ⓢ to BCD data, and stores it at the device designated by Ⓓ.

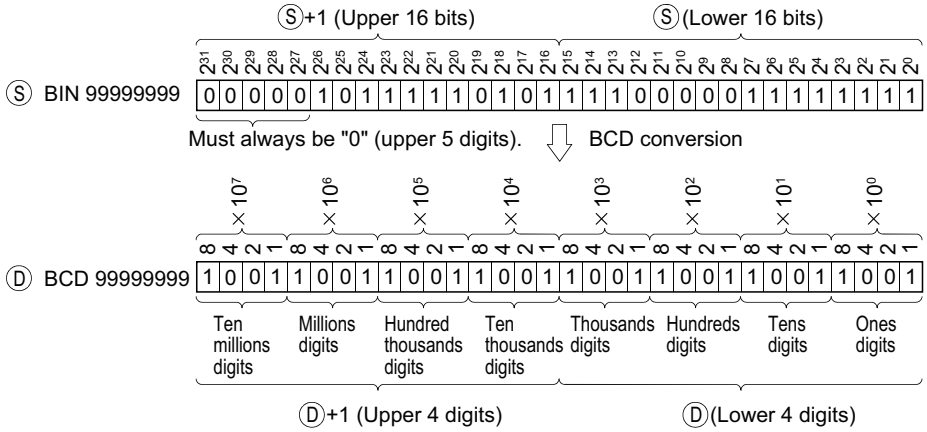

3.27.11 Data conversion instructions: BIN 32-bit data BIN conversions ... DBIN, DBINP

		Applicable device									Digit specification	Error flag
		Bit device			Word (16-bit) device			Constant		Level		
		X	Y	M	T	C	D	K	H	N		(SM0)
DBIN DBINP	Ⓢ	○	○	○	○	○	○	○	○		K1 to K8	○
	Ⓓ	○	○	○	○	○	○					

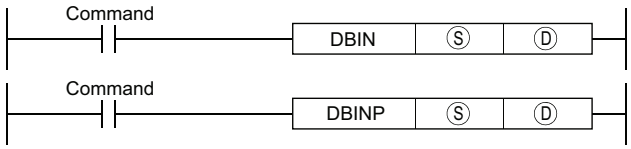

Setting data

Ⓢ	BCD data or start number of the devices where the BCD data is stored (BCD 8 digits)
Ⓓ	Start number of the devices where BIN data will be stored (BIN 32 bits)

◆ Function

DBIN

Converts BCD data (0 to 99999999) at the device designated by Ⓢ to BIN data, and stores at the device designated by Ⓓ.

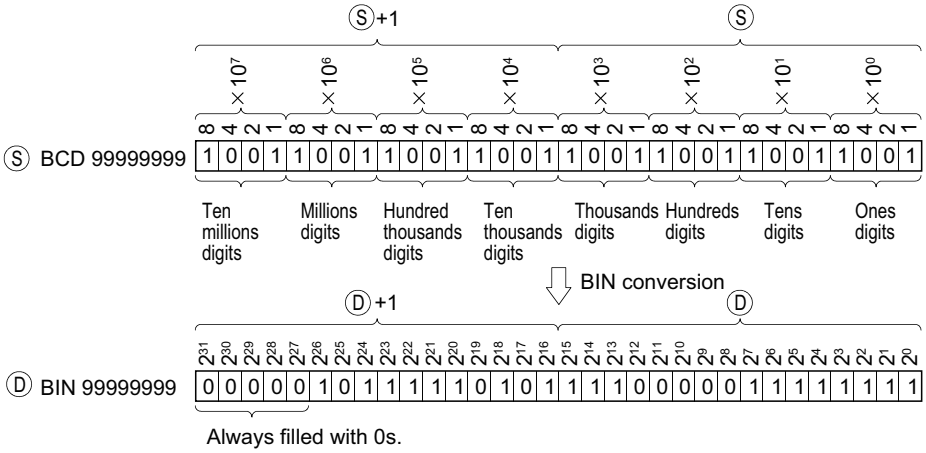

3.27.12 Program branch instruction:CJ, SCJ, JMP, GOEND

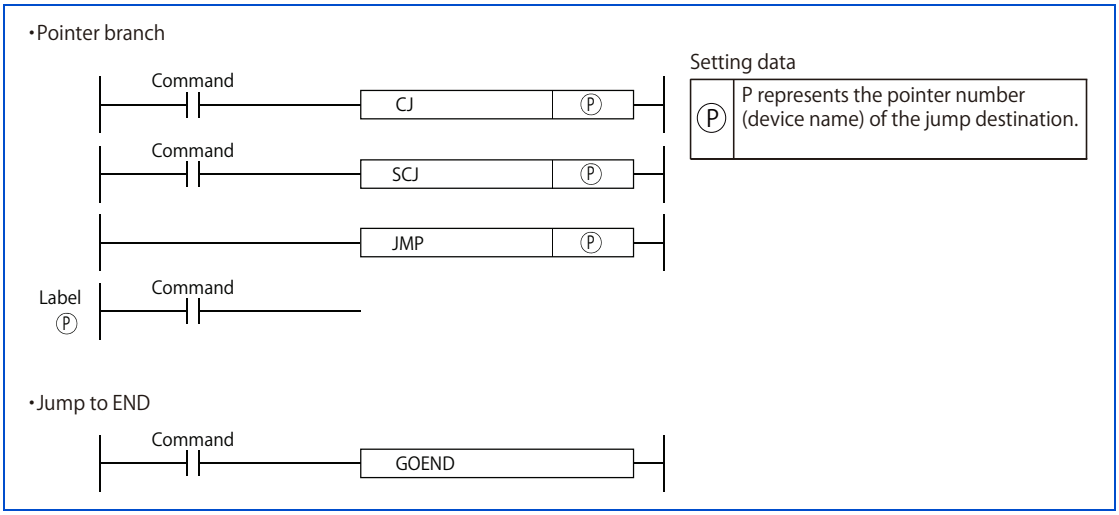

◆ Function

CJ

- When the execution command is ON, the program of the specified pointer number in the same program file is executed. When the execution command is OFF, the program in the next step is executed.

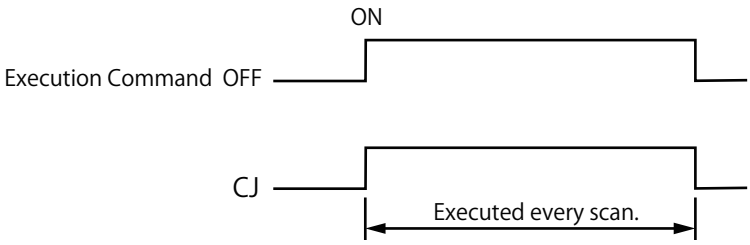

SCJ

- From the next scan after the execution command is turned ON, the program of the specified pointer number in the same program file is executed. While the execution command is OFF or when the command is turned OFF, the program in the next step is executed.

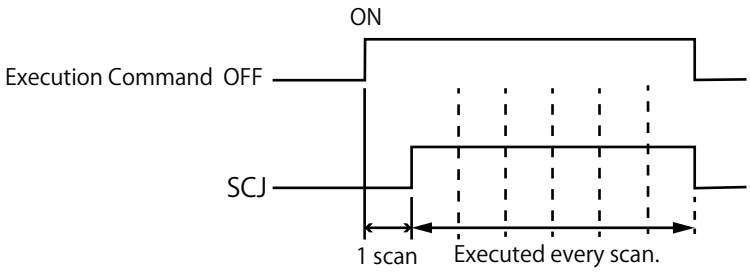

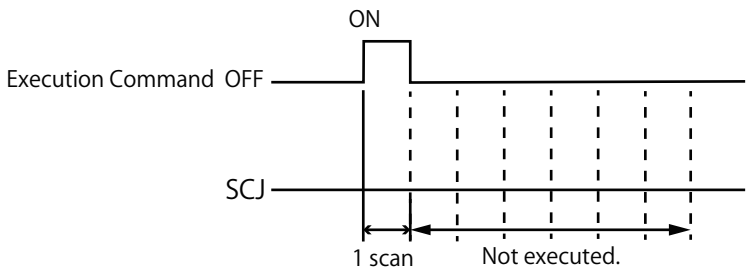

JMP

- The program of the specified pointer number in the same program file is executed unconditionally. An operation error occurs in the following cases. The error flag (SM0) turns ON and the error code is stored in SD0.

Error code	Fault definition
4210 (CAN'T EXECUTE(P)) (Refer to page 224)	• The specified pointer number does not exist before the END instruction. • The pointer number that is not used as a label in the same program is specified.

GOEND

- The program jumps to FEND or END instruction in the same program file.

Error code	Fault definition
4210 (CAN'T EXECUTE(P)) (Refer to page 224)	• The END instruction does not exist.

3.28 Application instructions (16-bit)

Application instructions (16-bit) are used when special processing is required.

3.28.1 Logical operation instructions

- Logical operation instructions are instructions that execute logical operations such as logical OR or logical AND.

- There are 10 types of logical operation instruction as shown below.

Classification	Instruction symbol
Logical AND	WAND
	WANDP
Logical OR	WOR
	WORP

Classification	Instruction symbol
Exclusive OR	WXOR
	WXORP
Exclusive NOR	WXNR
	WXNRP

Classification	Instruction symbol
2's complement (code reversed)	NEG
	NEGP

NOTE

- Logical operation instructions execute the following processes in increments of bits.

Classification	Process	Formula	Example		
			A	B	Y
Logical AND	Set 1 when the inputs of both A and B are 1. Set 0 in all other cases.	$Y=A \cdot B$	0	0	0
			0	1	0
			1	0	0
			1	1	1
Logical OR	Set 0 when the inputs of both A and B are 0. Set 1 in all other cases.	$Y=A+B$	0	0	0
			0	1	1
			1	0	1
			1	1	1
Exclusive OR	Set 0 when the inputs of both A and B are equal. Set 1 when they are different.	$Y=\overline{A} \cdot B+A \cdot \overline{B}$	0	0	0
			0	1	1
			1	0	1
			1	1	0
Exclusive NOR	Set 1 when the inputs of both A and B are equal. Set 0 when they are different.	$Y= (\overline{A}+B) (A+\overline{B})$	0	0	1
			0	1	0
			1	0	0
			1	1	1

3.28.2 Logical operation instruction: BIN 16-bit logical AND ... WAND, WANDP

		Applicable device									Digit specification	Error flag
		Bit device			Word (16-bit) device			Constant		Level		
		X	Y	M	T	C	D	K	H	N		(SM0)
WAND	Ⓢ	○	○	○	○	○	○	○	○		K1 to K4	○
	Ⓓ		○	○	○	○	○					
	Ⓢ1	○	○	○	○	○	○	○	○			
	Ⓢ2	○	○	○	○	○	○	○	○			
	Ⓓ1		○	○	○	○	○					

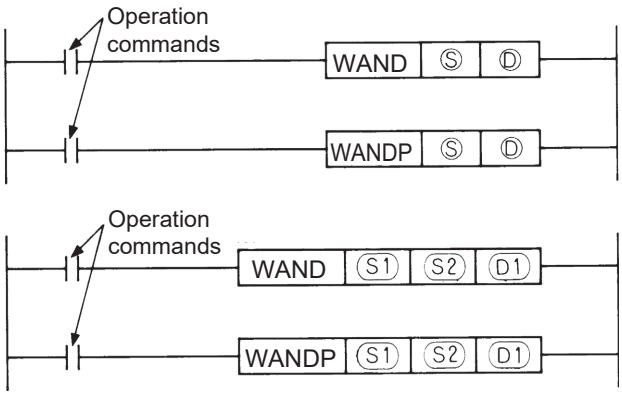

Setting data

Ⓢ, Ⓢ1, Ⓢ2, Ⓓ	Start number of the data that executes the logical AND or the device in which the data is stored
Ⓓ1	Start number of the device in which the logical AND results are stored

◆ Function

WAND

- Logical AND is executed for each bit of the 16-bit data of the device specified with Ⓓ and 16-bit data of the device specified with Ⓢ, and the results are stored in the device specified with Ⓓ.

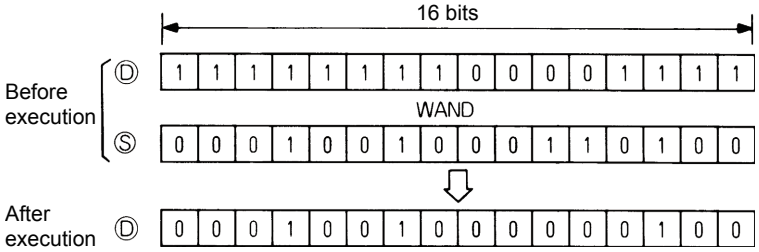

- Logical AND is executed for each bit of the 16-bit data of the device specified with Ⓢ1 and 16-bit data of the device specified with Ⓢ2, and the results are stored in the device specified with Ⓓ1.

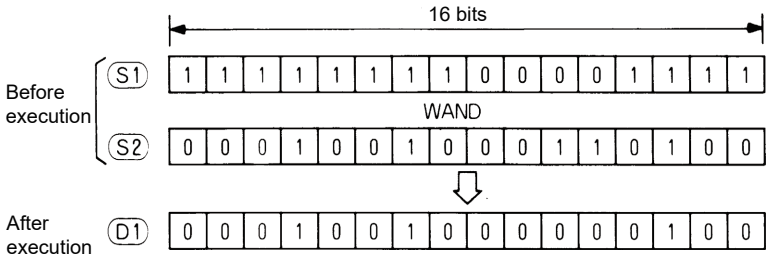

- Bits of the bit device higher than the specified digit are operated as 0.

◆ Execution condition

The execution conditions for logical AND instructions are as follows.

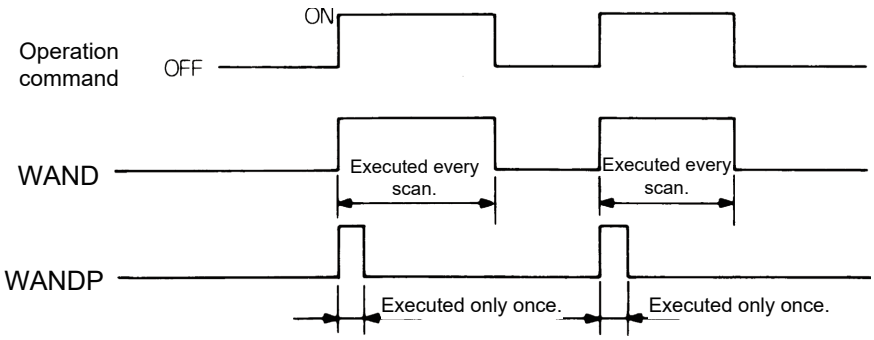

◆ Program example

WAND

- Program that masks the tenth digit (the second digit from the bottom) of the BCD 4 digits when XA turns ON.

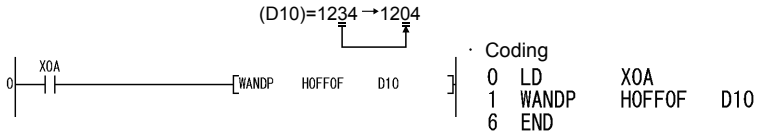

· Coding

```
0   LD      X0A
1   WANDP   H0FF0F   D10
6   END
```

- Program that executes logical AND for X10 to 1B data and D33 data when XA turns ON, and outputs the results to Y0 to B.

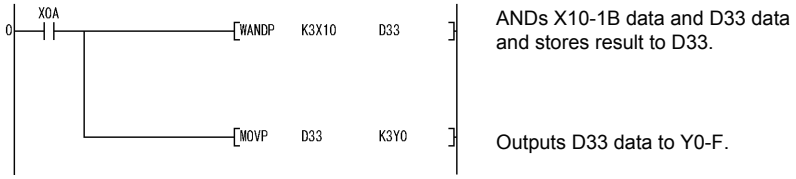

· Coding

```
 0   LD      X0A
 1   WANDP   K3X10   D33
 6   MOVP    D33     K3Y0
11   END
```

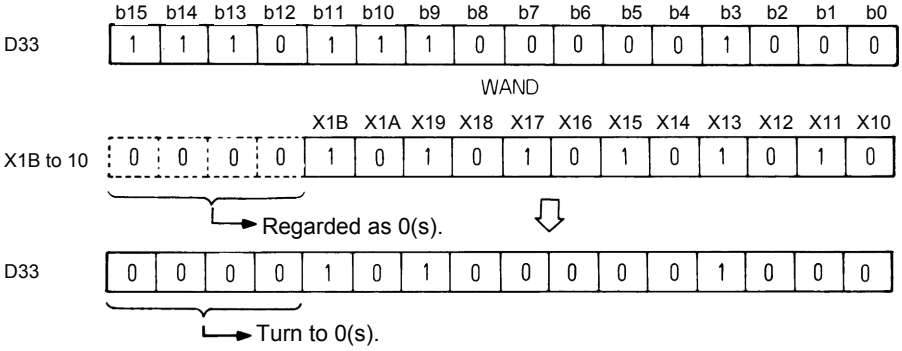

3.28.3 Logical operation instruction: BIN 16-bit logical OR ... WOR, WORP

		Applicable device									Digit specification	Error flag
		Bit device			Word (16-bit) device			Constant		Level		
		X	Y	M	T	C	D	K	H	N		(SM0)
WOR	Ⓢ	○	○	○	○	○	○	○	○		K1 to K4	○
	Ⓓ		○	○	○	○	○					
	Ⓢ1	○	○	○	○	○	○	○	○			
	Ⓢ2	○	○	○	○	○	○	○	○			
	Ⓓ1		○	○	○	○	○					

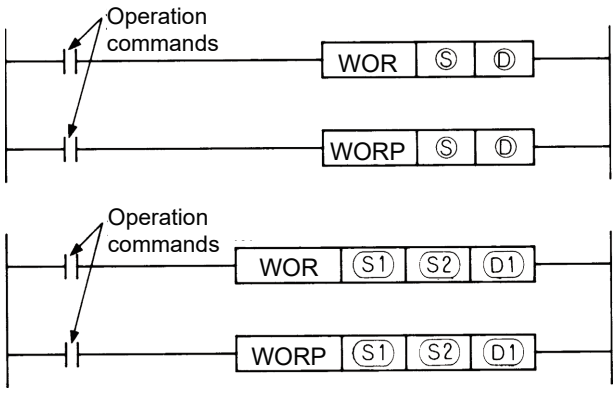

Setting data

Ⓢ, Ⓢ1, Ⓢ2, Ⓓ	Start number of the data that executes the logical OR or the device in which the data is stored
Ⓓ1	Start number of the device in which the logical OR results are stored

◆ Function

WOR

- Logical OR is executed for each bit of the 16-bit data of the device specified with Ⓓ and 16-bit data of the device specified with Ⓢ, and the results are stored in the device specified with Ⓓ.

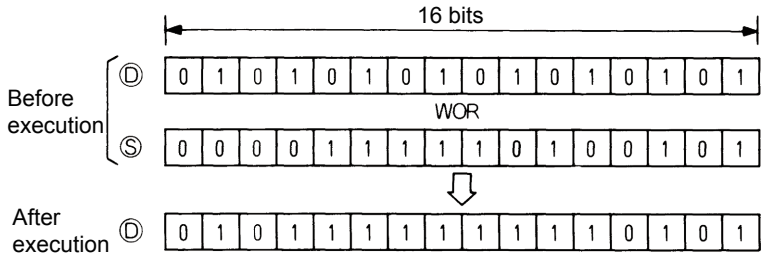

- Logical OR is executed for each bit of the 16-bit data of the device specified with Ⓢ1 and 16-bit data of the device specified with Ⓢ2, and the results are stored in the device specified with Ⓓ1.

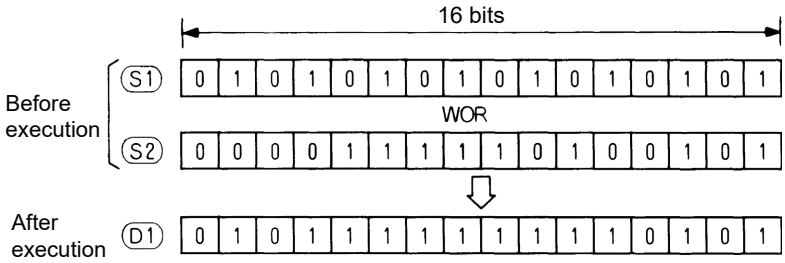

- Bits of the bit device higher than the specified digit are operated as 0.

◆ Execution condition

- The execution conditions for logical OR instructions are as follows.

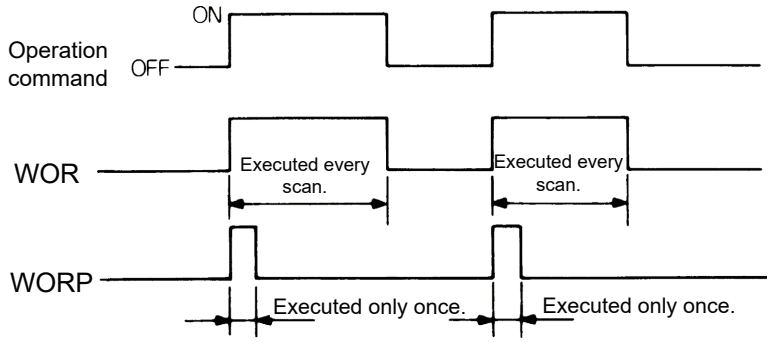

◆ Program example

WOR

- Program that executes logical OR for D10 and D20 data when XA turns ON, and stores the results in D10.

- Program that executes logical OR for X10 to 1B data and D33 data when XA turns ON, and outputs the results to Y0 to B.

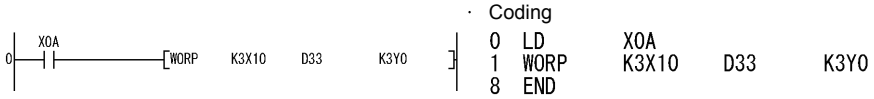

3.28.4 Logical operation instruction: BIN 16-bit data exclusive OR ... WXOR, WXORP

		Applicable device									Digit specification	Error flag
		Bit device			Word (16-bit) device			Constant		Level		
		X	Y	M	T	C	D	K	H	N		(SM0)
WXOR	Ⓢ	○	○	○	○	○	○	○	○		K1 to K4	○
	Ⓓ		○	○	○	○	○					
	Ⓢ1	○	○	○	○	○	○	○	○			
	Ⓢ2	○	○	○	○	○	○	○	○			
	Ⓓ1		○	○	○	○	○					

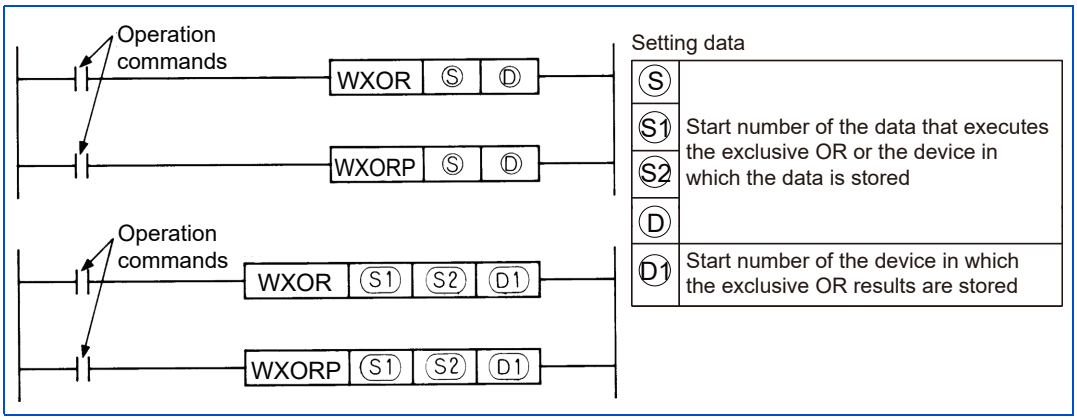

◆ Function

WXOR

- Exclusive OR is executed for each bit of the 16-bit data of the device specified with Ⓓ and 16-bit data of the device specified with Ⓢ, and the results are stored in the device specified with Ⓓ.

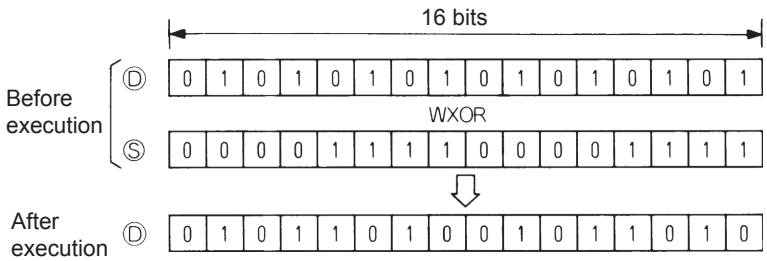

- Exclusive OR is executed for each bit of the 16-bit data of the device specified with Ⓢ1 and 16-bit data of the device specified with Ⓢ2, and the results are stored in the device specified with Ⓓ1.

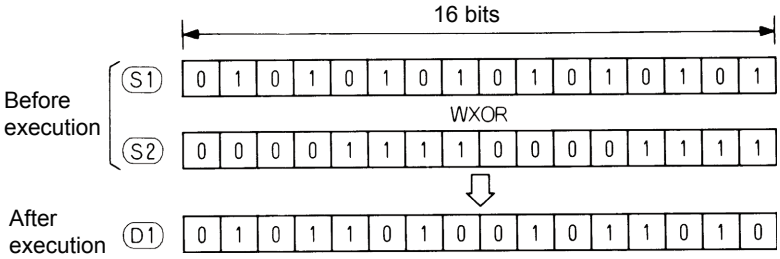

- Bits of the bit device higher than the specified digit are operated as 0.

◆ Execution condition

The execution conditions for exclusive OR instructions are as follows.

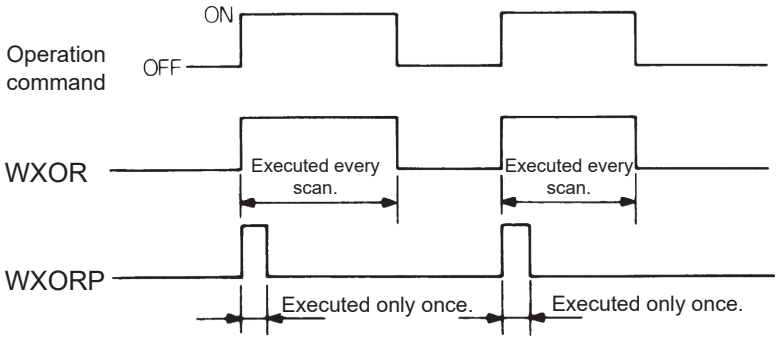

◆ Program example

WXOR

- Program that executes exclusive OR for D10 and D20 data when XA turns ON, and stores the results in D10.

- Program that executes exclusive OR for X10 to 1B data and D33 data when XA turns ON, and outputs the results to Y30 to 3B.

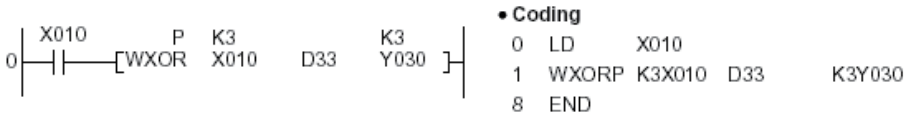

3.28.5 Logical operation instruction: BIN 16-bit data exclusive NOR ... WXNR, WXNRP

		Applicable device									Digit specification	Error flag
		Bit device			Word (16-bit) device			Constant		Level		
		X	Y	M	T	C	D	K	H	N		(SM0)
WXNR	Ⓢ	○	○	○	○	○	○	○	○		K1 to K4	○
	Ⓓ		○	○	○	○	○					
	Ⓢ1	○	○	○	○	○	○	○	○			
	Ⓢ2	○	○	○	○	○	○	○	○			
	Ⓓ1		○	○	○	○	○					

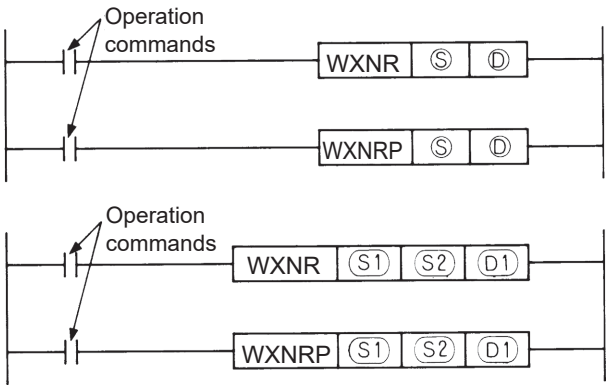

Setting data

Ⓢ, Ⓢ1, Ⓢ2, Ⓓ	Start number of the data that executes the exclusive NOR or the device in which the data is stored
Ⓓ1	Start number of the device in which the exclusive NOR results are stored

◆ Function

WXNR

- Exclusive NOR is executed for the 16-bit data of the device specified with Ⓓ and 16-bit data of the device specified with Ⓢ, and the results are stored in the device specified with Ⓓ.

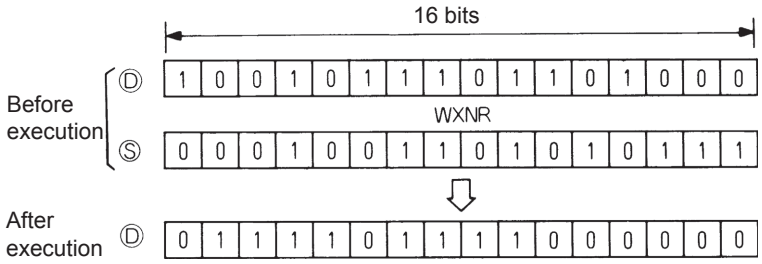

- Exclusive NOR is executed for the 16-bit data of the device specified with Ⓢ1 and 16-bit data of the device specified with Ⓢ2, and the results are stored in the device specified with Ⓓ1.

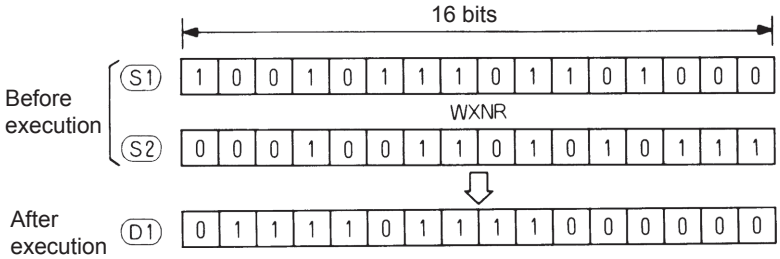

- Bits of the bit device higher than the specified digit are operated as 0.

◆ Execution condition

The execution conditions for exclusive NOR instructions are as follows.

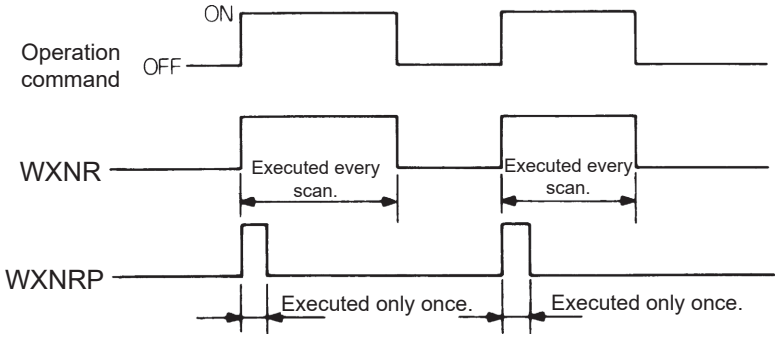

◆ Program example

WXNR

- Program that executes exclusive NOR for the 16-bit data of X30 to 3F and D99 data when X0 turns ON, and stores the results in D7.

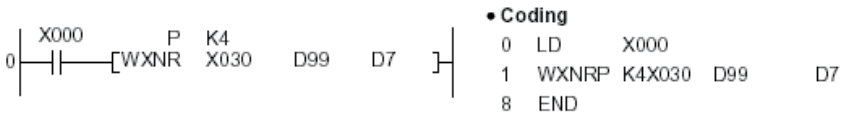

3.29 Application instructions (32-bit)

Application instructions (32-bit) are used when special processing is required.

3.29.1 Logical operation instructions

- Logical operation instructions are instructions that execute logical operations such as logical OR or logical AND.

- There are 10 types of logical operation instruction as shown below.

Classification	Instruction symbol
Logical AND	DAND
	DANDP
Logical OR	DOR
	DORP

Classification	Instruction symbol
Exclusive OR	DXOR
	DXORP
Exclusive NOR	DXNR
	DXNRP

Classification	Instruction symbol
2's complement (code reversed)	DNEG
	DNEGP

NOTE

- Logical operation instructions execute the following processes in increments of bits.

Classification	Process	Formula	Example		
			A	B	Y
Logical AND	Set 1 when the inputs of both A and B are 1. Set 0 in all other cases.	$Y=A \cdot B$	0	0	0
			0	1	0
			1	0	0
			1	1	1
Logical OR	Set 0 when the inputs of both A and B are 0. Set 1 in all other cases.	$Y=A+B$	0	0	0
			0	1	1
			1	0	1
			1	1	1
Exclusive OR	Set 0 when the inputs of both A and B are equal. Set 1 when they are different.	$Y=\overline{A} \cdot B+A \cdot \overline{B}$	0	0	0
			0	1	1
			1	0	1
			1	1	0
Exclusive NOR	Set 1 when the inputs of both A and B are equal. Set 0 when they are different.	$Y= (\overline{A}+B)\ (A+\overline{B})$	0	0	1
			0	1	0
			1	0	0
			1	1	1

3.29.2 Logical operation instruction: BIN 32-bit logical AND ... DAND, DANDP

		Applicable device									Digit specification	Error flag
		Bit device			Word (16-bit) device			Constant		Level		
		X	Y	M	T	C	D	K	H	N		(SM0)
DAND(P)	(S)	○	○	○	○	○	○	○	○		K1 to K8	○
	(D)		○	○	○	○	○					
	(S1)	○	○	○	○	○	○	○	○			
	(S2)	○	○	○	○	○	○	○	○			
	(D1)		○	○	○	○	○					

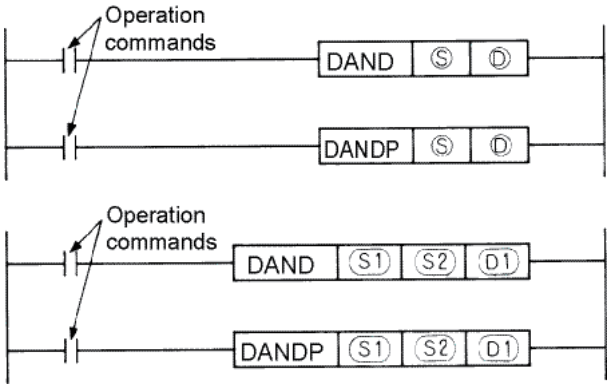

Setting data

(S)	Start number of the data that executes the logical AND or the device in which the data is stored
(S1)	
(S2)	
(D)	
(D1)	Start number of the device in which the logical AND results are stored

◆ Function

DAND

- Logical AND is executed for each bit of the 32-bit data of the device specified with Ⓓ and 32-bit data of the device specified with Ⓢ, and the results are stored in the device specified with Ⓓ.

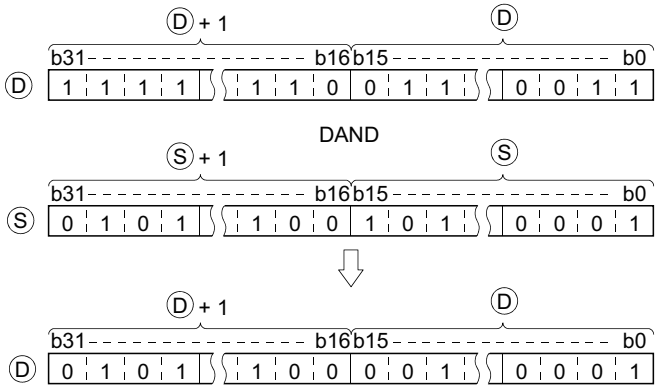

- Logical AND is executed for each bit of the 32-bit data of the device specified with Ⓢ1 and 32-bit data of the device specified with Ⓢ2, and the results are stored in the device specified with Ⓓ1.

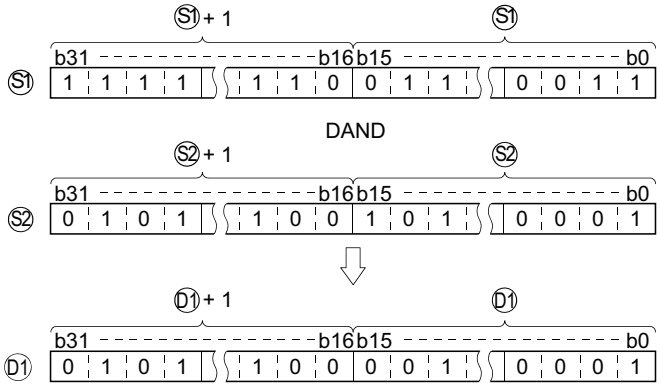

- Bits of the bit device higher than the specified digit are operated as 0.

◆ Execution condition

The execution conditions for logical AND instructions are as follows.

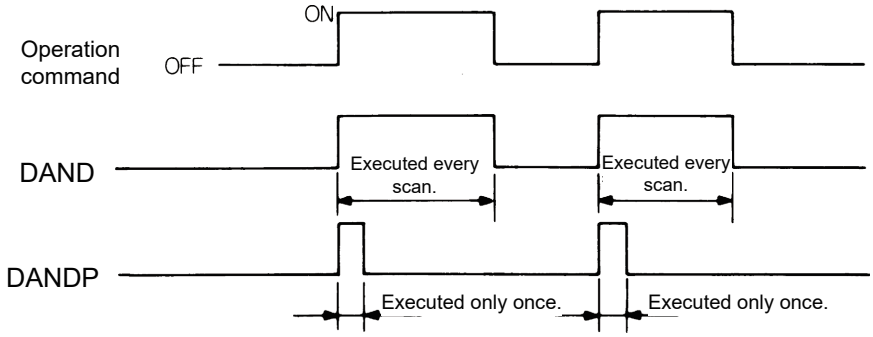

◆ Program example

DAND

- The following program performs a logical product operation on the data at D99 and D100, and the 24-bit data between X20 and X37 when X8 is ON, and stores the results at D99 and D100.

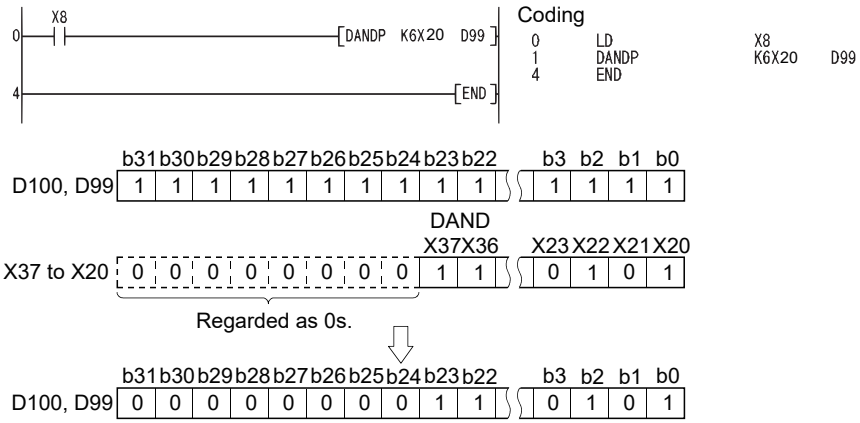

3.29.3 Logical operation instruction: BIN 32-bit logical OR ... DOR, DORP

		Applicable device									Digit specification	Error flag
		Bit device			Word (16-bit) device			Constant		Level		
		X	Y	M	T	C	D	K	H	N		(SM0)
DOR(P)	Ⓢ	○	○	○	○	○	○	○	○		K1 to K8	○
	Ⓓ		○	○	○	○	○					
	Ⓢ1	○	○	○	○	○	○	○	○			
	Ⓢ2	○	○	○	○	○	○	○	○			
	Ⓓ1		○	○	○	○	○					

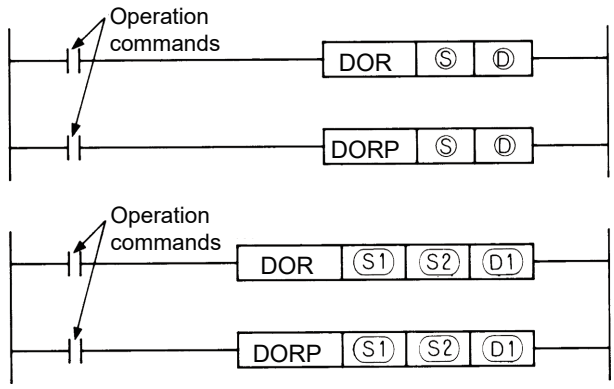

Setting data

Ⓢ, Ⓢ1, Ⓢ2, Ⓓ	Start number of the data that executes the logical OR or the device in which the data is stored
Ⓓ1	Start number of the device in which the logical OR results are stored

◆ Function

DOR

- Logical OR is executed for each bit of the 32-bit data of the device specified with Ⓓ and 32-bit data of the device specified with Ⓢ, and the results are stored in the device specified with Ⓓ.

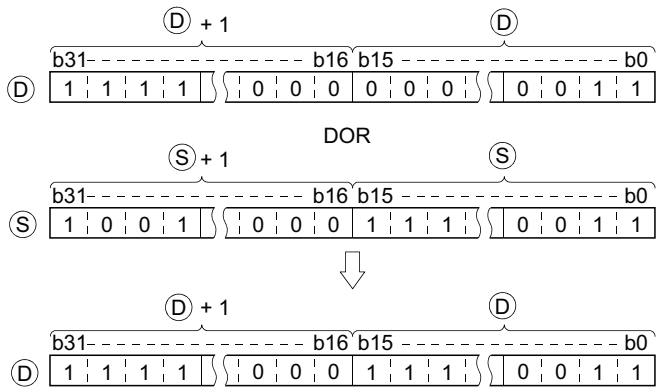

- Logical OR is executed for each bit of the 32-bit data of the device specified with Ⓢ1 and 32-bit data of the device specified with Ⓢ2, and the results are stored in the device specified with Ⓓ1.

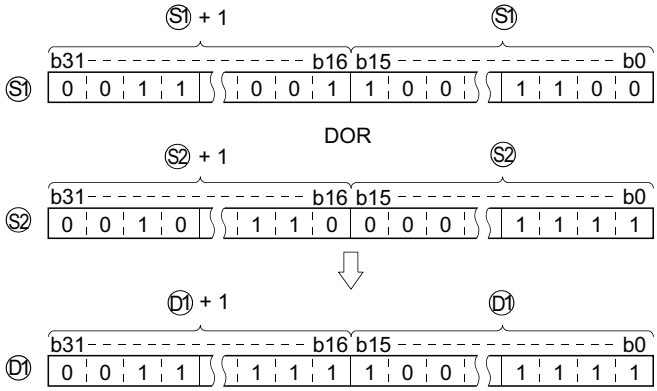

- Bits of the bit device higher than the specified digit are operated as 0.

◆ Execution condition

- The execution conditions for logical OR instructions are as follows.

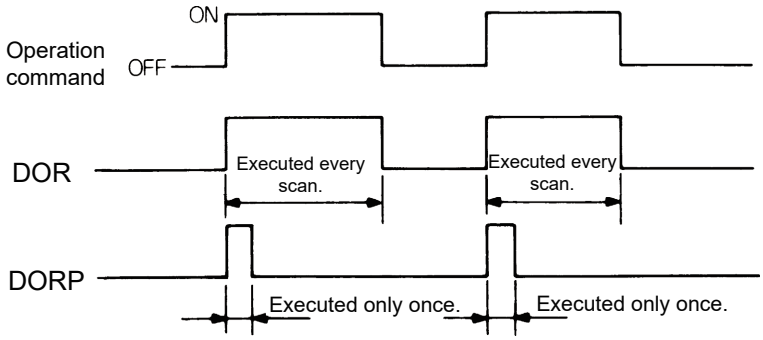

◆ Program example

DOR

- The following program performs a logical sum operation on the 32-bit data from X0 to X1F, and on the hexadecimal value FF00FF00H when XB is turned ON, and stores the results at D66 and D67.

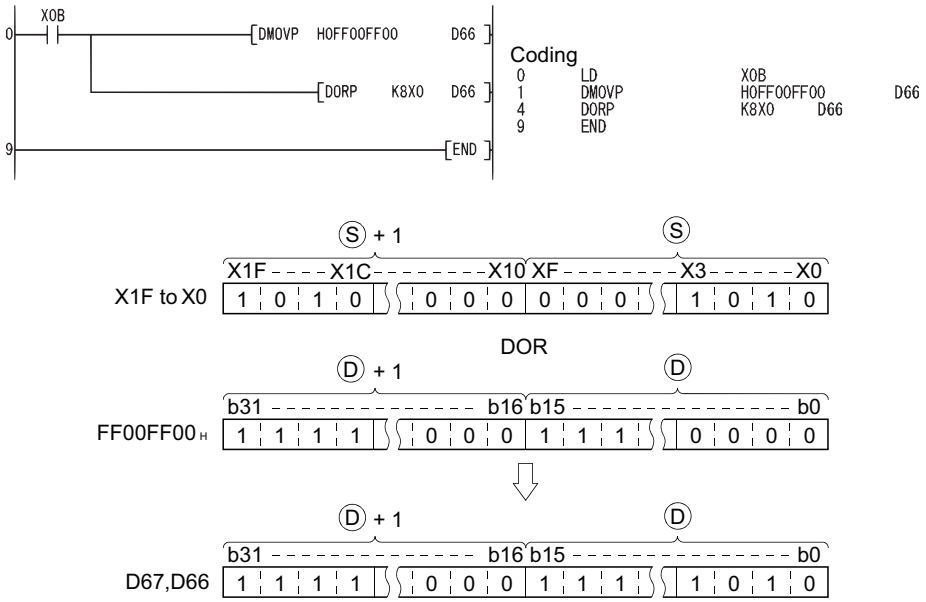

- The following program performs a logical sum operation on the 32-bit data at D0 and D1, and the 24-bit data from X20 to X37, and stores the results at D23 and D24 when M8 is ON.

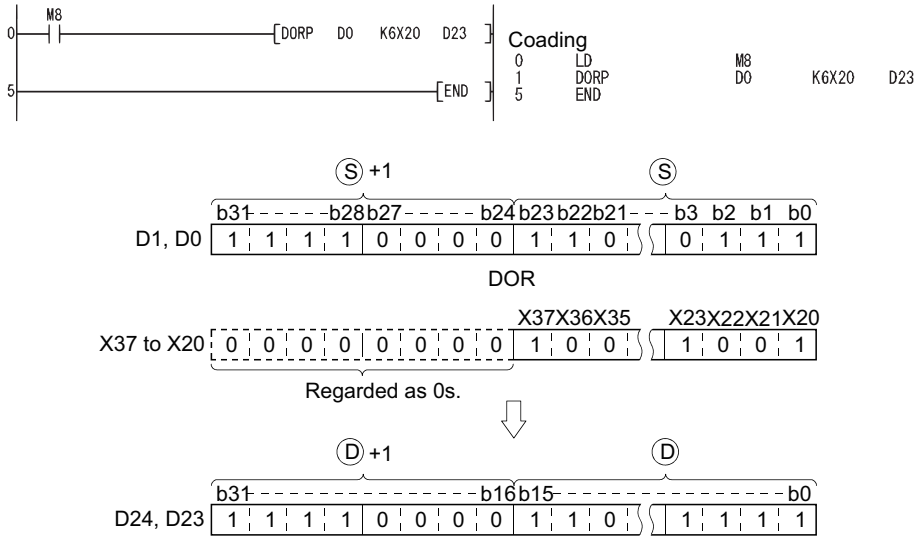

3.29.4 Logical operation instruction: BIN 32-bit data exclusive OR ... DXOR, DXORP

		Applicable device									Digit specification	Error flag
		Bit device			Word (16-bit) device			Constant		Level		
		X	Y	M	T	C	D	K	H	N		(SM0)
DXOR(P)	Ⓢ	○	○	○	○	○	○	○	○		K1 to K8	○
	Ⓓ		○	○	○	○	○					
	Ⓢ1	○	○	○	○	○	○	○	○			
	Ⓢ2	○	○	○	○	○	○	○	○			
	Ⓓ1		○	○	○	○	○					

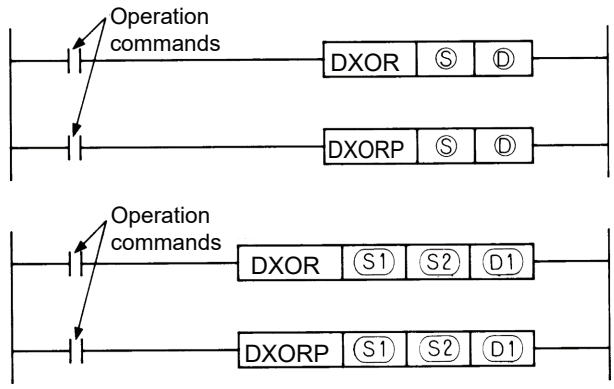

Setting data

Ⓢ, Ⓢ1, Ⓢ2, Ⓓ	Start number of the data that executes the exclusive OR or the device in which the data is stored
Ⓓ1	Start number of the device in which the exclusive OR results are stored

◆ Function

DXOR

- Exclusive OR is executed for each bit of the 32-bit data of the device specified with Ⓓ and 32-bit data of the device specified with Ⓢ, and the results are stored in the device specified with Ⓓ.

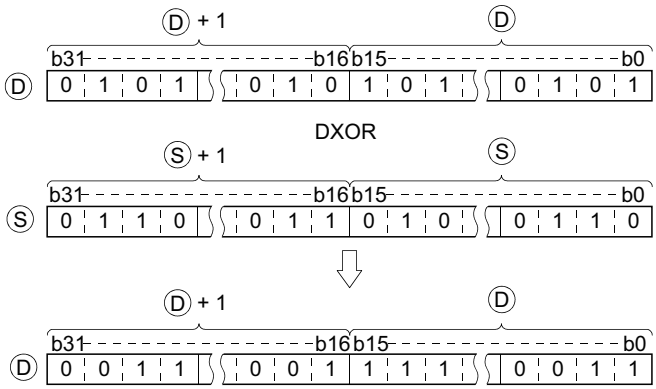

- Exclusive OR is executed for each bit of the 32-bit data of the device specified with (S1) and 32-bit data of the device specified with (S2), and the results are stored in the device specified with (D1).

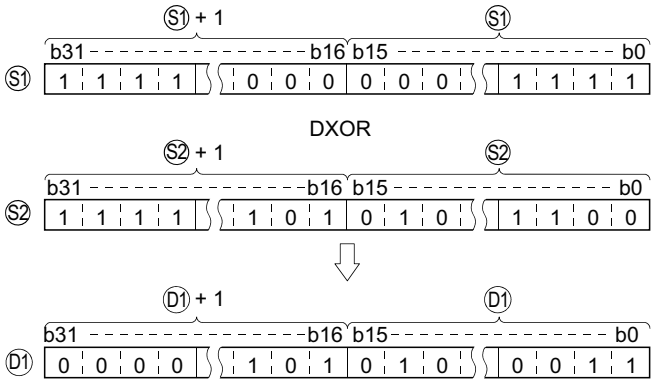

- Bits of the bit device higher than the specified digit are operated as 0.

◆ Execution condition

The execution conditions for exclusive OR instructions are as follows.

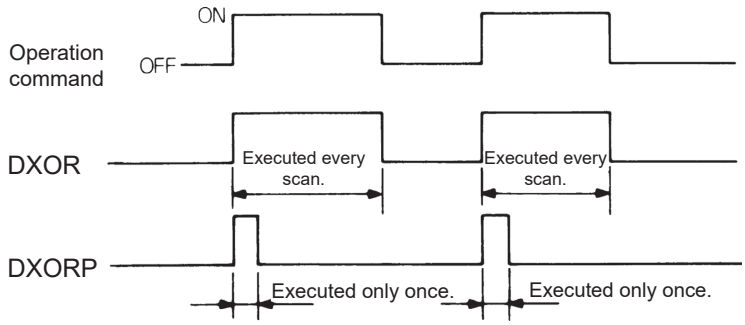

◆ Program example

DXOR

- The following program conducts an exclusive OR operation on the data at D20 and D21, and the data at D30 and D31 when X10 is turned ON, and stores the results at D40 and D41.

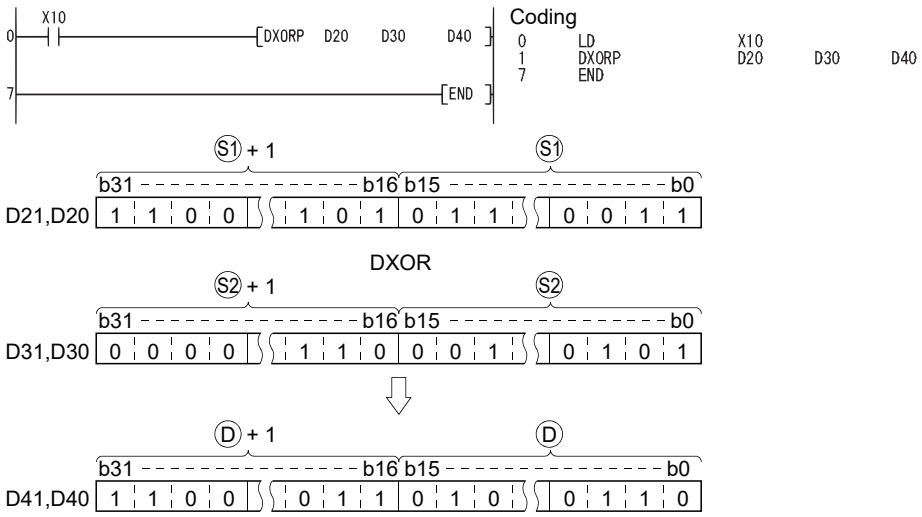

3.29.5 Logical operation instruction: BIN 32-bit data exclusive NOR ... DXNR, DXNRP

		Applicable device									Digit specification	Error flag
		Bit device			Word (16-bit) device			Constant		Level		
		X	Y	M	T	C	D	K	H	N		(SM0)
DXNR(P)	Ⓢ	○	○	○	○	○	○	○	○		K1 to K8	○
	Ⓓ		○	○	○	○	○					
	Ⓢ1	○	○	○	○	○	○	○	○			
	Ⓢ2	○	○	○	○	○	○	○	○			
	Ⓓ1		○	○	○	○	○					

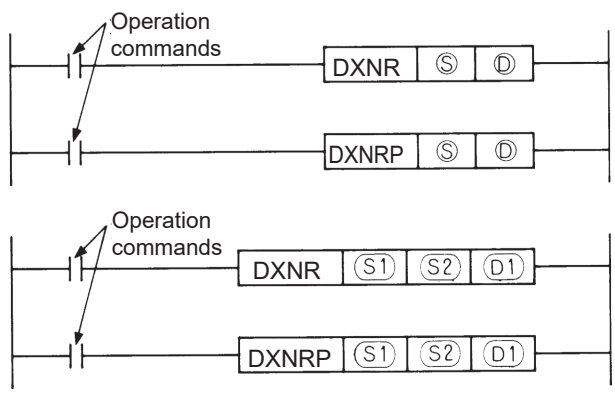

Setting data

Ⓢ, Ⓢ1, Ⓢ2, Ⓓ	Start number of the data that executes the exclusive NOR or the device in which the data is stored
Ⓓ1	Start number of the device in which the exclusive NOR results are stored

◆ Function

DXNR

- Exclusive NOR is executed for the 32-bit data of the device specified with Ⓓ and 32-bit data of the device specified with Ⓢ, and the results are stored in the device specified with Ⓓ.

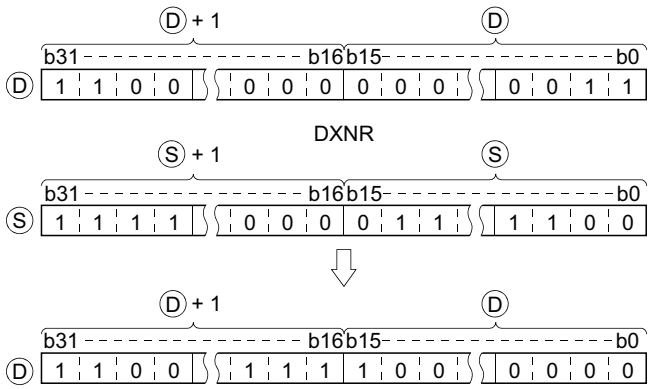

- Exclusive NOR is executed for the 32-bit data of the device specified with (S1) and 32-bit data of the device specified with (S2), and the results are stored in the device specified with (D1).

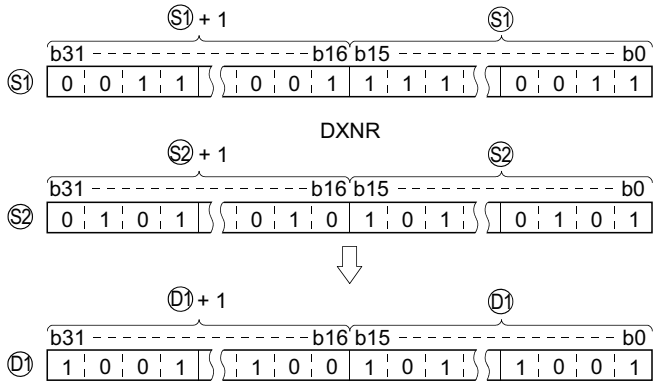

- Bits of the bit device higher than the specified digit are operated as 0.

◆ Execution condition

The execution conditions for exclusive NOR instructions are as follows.

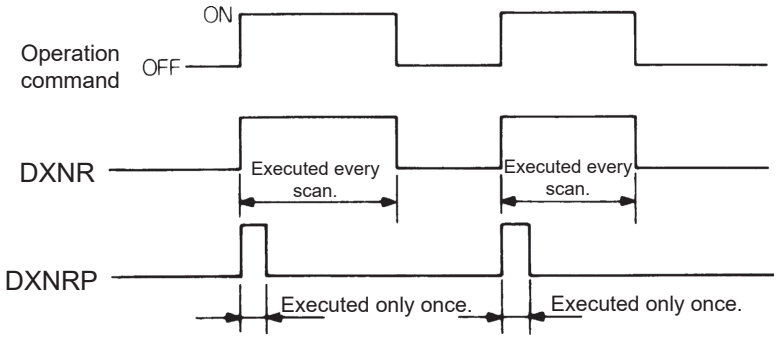

◆ Program example

DXNR

- The following program performs an exclusive NOR operation on the 32-bit data at D20 and D21 and the data at D10 and D11 when X10 is turned ON, and stores the result to D40 and D41.

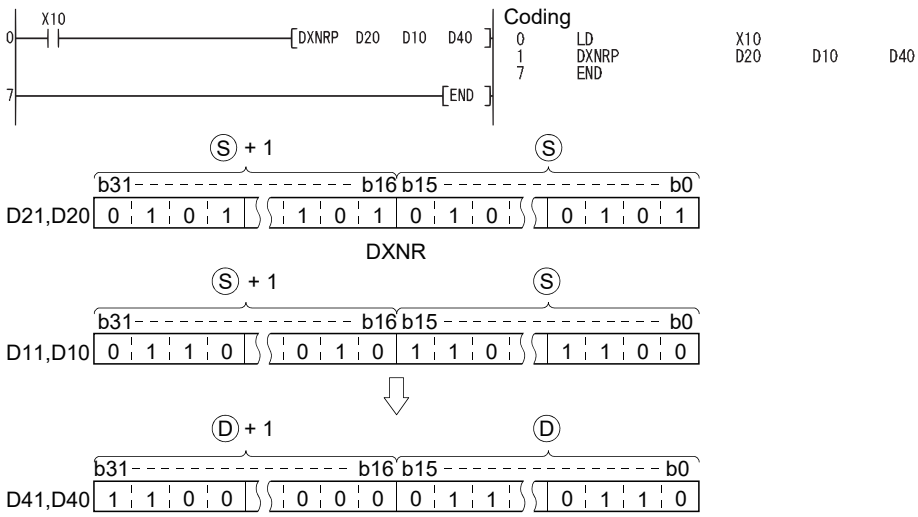

3.30 Display instruction

3.30.1 Character string data transfer ... $MOV, $MOVP

	Applicable device									Digit specification	Error flag
	Bit device			Word (16-bit) device			Constant		Level		
	X	Y	M	T	C	D	K	H	N		(SM0)
Ⓢ							○	○			
Ⓓ				○	○	○					○

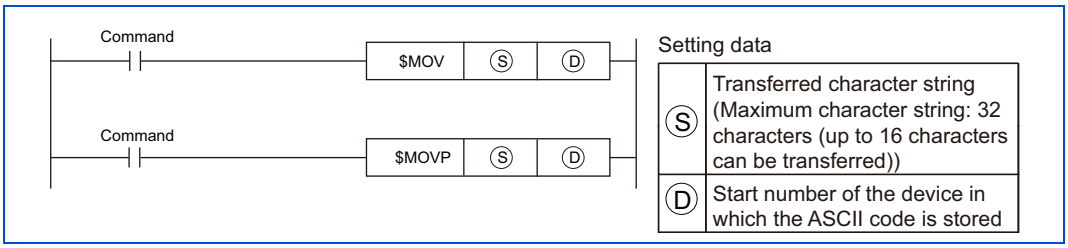

◆ Function

- The character string data enclosed in double-quotation marks (" ") specified with Ⓢ are transferred after the device number specified in Ⓓ.
- Only character string data that is enclosed in double-quotation marks (" ") can be set in Ⓢ. A device can also be input, but doing so results in an error at execution (INSTRCT. CODE ERR: 4000).
- Only word devices can be set in Ⓓ. Bit devices can also be input, but doing so results in an error (INSTRCT. CODE ERR: 4000) at execution.
- A maximum of 32 characters can be set in Ⓢ. (Up to 16 characters can be transmitted from Ⓢ to Ⓓ. The 17th character or later are invalid.)

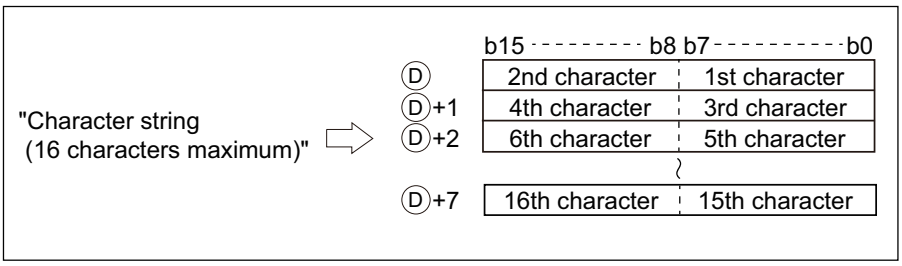

- If the set number of characters is less than 16, the content of Ⓓ in the sections without corresponding characters remains unchanged.

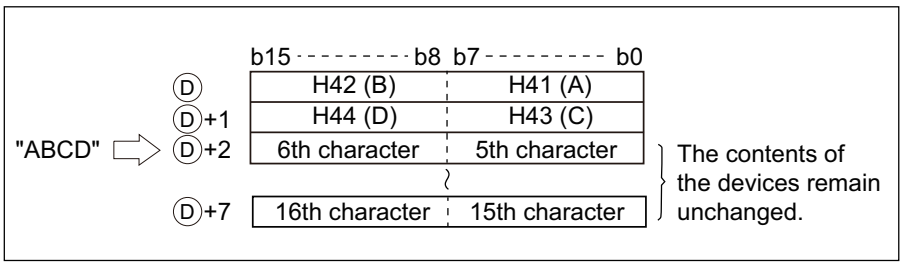

3.30.2 Character string output ... G. PRR, GP.PRR, UMSG

G.PRR , GP.PRR

	Applicable device									Others U	Digit specification	Error flag
	Bit device			Word (16-bit) device			Constant		Level			
	X	Y	M	T	C	D	K	H	N			(SM0)
n										○		○
Ⓢ				○	○	○						
Ⓓ	○	○	○			○						

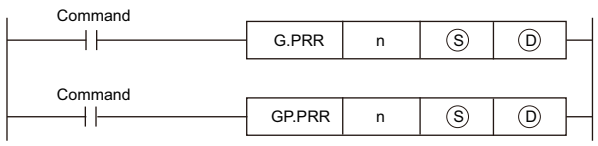

Setting data

n	Not used, but U is specified
Ⓢ	Character string that is displayed on the display unit or the start number of the devices containing the character string to be displayed
Ⓓ	Not used, but Y is specified

UMSG

	Applicable device									Digit specification	Error flag
	Bit device			Word (16-bit) device			Constant		Level		
	X	Y	M	T	C	D	K	H	N		(SM0)
Ⓢ				○	○	○					○

Setting data

Ⓢ	Character string that is displayed on the display unit or the start number of the devices containing the character string to be displayed

◆ Function

G.PRR , GP.PRR

n is not used, but specify U.

Register the data to be displayed on the LCD operation panel (FR-LU08) or the parameter unit (FR-PU07) in the device specified with Ⓢ.

Ⓓ is not used, but specify Y.

UMSG

Register the data to be displayed on the LCD operation panel (FR-LU08) or the parameter unit (FR-PU07) in the device specified with Ⓢ.

■ Setting data: For user monitor name

Set the monitor name as shown below when SD1216 to 1218 are monitored by the LCD operation panel (FR-LU08) or the parameter unit (FR-PU07).

	Upper 8 bits	Lower 8 bits	
Ⓢ+0	****	01	← Set the corresponding monitor number to the upper 8 bits, and 01 to the lower 8 bits.
	2nd character	1st character	← Monitor name: Character start
	4th character	3rd character	
	6th character	5th character	
	8th character	7th character	
	10th character	9th character	
	12th character	11th character	
	14th character	13th character	
Ⓢ+8	16th character	15th character	

- Set 01 to the lower 8 bits of Ⓢ+0.
- Set the monitor description number to replace the user monitor name display in the upper 8 bits of Ⓢ+0.

The monitor description number is as shown below.

Monitor description number	Monitor description
40 (H28)	User monitor 1: SD1216 description
41 (H29)	User monitor 2: SD1217 description
42 (H2A)	User monitor 3: SD1218 description

- When the upper 8 bits of Ⓢ+0 are values other than those in the table above, an operation error (OPERATION ERROR: 4100) is generated.
- When the 7th bit of Ⓢ+0 is executed as 1 (lower 8 bits as H81), the registered data is cleared and the monitor display returns to normal.
- Settings can be made up to the 16th character. (Data from Ⓢ+1 to Ⓢ+8 are effective as characters.)
- Up to 12 characters can be displayed on the FR-LU08 or the FR-PU07. When the number of characters exceeds 12, the 13th character or later will not appear.

NOTE

- To display the monitor above on the parameter unit (FR-LU08 or FR-PU07), set "40, 41, 42" in **Pr.774 to Pr.776** in advance. (For details on **Pr.774 to Pr.776**, refer to the Instruction Manual (Detailed) of the inverter.)

■ Setting data: For user-defined error name

Set the user-defined error name as shown below to display the user-defined error on the LCD operation panel (FR-LU08) or the parameter unit (FR-PU07). (A user defined error occurs when values 16 (H10) to 20 (H14) are set in SD1214.)

	Upper 8 bits	Lower 8 bits	
Ⓢ+0	****	02	← Set the corresponding error number to the upper 8 bits, and 02 to the lower 8 bits.
	2nd character	1st character	← Error name: Character start
	4th character	3rd character	
	6th character	5th character	
	8th character	7th character	
	10th character	9th character	
	12th character	11th character	
	14th character	13th character	
Ⓢ+8	16th character	15th character	

- Set an error number that corresponds to the upper 8 bits of Ⓢ+0. The setting range is from 16 (H10) to 20 (H14).
- When the upper 8 bits of Ⓢ+0 are values other than 16 (H10) to 20 (H14), an operation error (OPERATION ERROR: 4100) is generated.

- When the 7th bit of Ⓢ+0 is executed as 1 (lower 8 bits as H82), the registered data is cleared.
- Settings can be made up to the 16th character. (Data from Ⓢ+1 to Ⓢ+8 are effective as characters.)
- Up to 12 characters can be displayed on the FR-LU08 or the FR-PU07. When the number of characters exceeds 12, the 13th character or later will not appear.

■ Setting data: For user parameter name

Set the parameter name as shown below to display the read user parameters **Pr.1150 to Pr.1159** on the LCD operation panel (FR-LU08).

	Upper 8 bits	Lower 8 bits	
Ⓢ+0	****	03	← Set the corresponding parameter number to the upper 8 bits, and 03 to the lower 8 bits.
	2nd character	1st character	← Parameter name: Character start
	4th character	3rd character	
	6th character	5th character	
	8th character	7th character	
	10th character	9th character	
	12th character	11th character	
	14th character	13th character	
Ⓢ+8	16th character	15th character	

- Set the corresponding parameter number the upper 8 bits of Ⓢ+0.

Parameter number	Setting value
1150	01(H01)
1151	02(H02)
1152	03(H03)
1153	04(H04)
1154	05(H05)
1155	06(H06)
1156	07(H07)
1157	08(H08)
1158	09(H09)
1159	10(H0A)

- When the upper 8 bits of Ⓢ+0 are values other than those in the table above, an operation error (OPERATION ERROR: 4101) is generated.
- When the 7th bit of Ⓢ+0 is executed as 1 (lower 8 bits as H83), the registered data is cleared.
- Settings can be made up to the 16th character. (Data from Ⓢ+1 to Ⓢ+8 are effective as characters)
- Up to 9 characters can be displayed on the FR-LU08. When the number of characters exceeds 9, the 10th character or later will not appear.

■ Setting data: For unit names

This function sets up the increment for the user monitors SD1216 to SD1218 or the user parameters **Pr.1150 to Pr.1159** using the LCD operation panel (FR-LU08) or the parameter unit (FR-PU07).

	Upper 8 bits	Lower 8 bits	
Ⓢ+0	****	04	← Set the corresponding user monitor number to the upper 8 bits, and 04 to the lower 8 bits.
	2nd character	1st character	← Unit name: Character start
Ⓢ+2		3rd character	

- Set 04 to the lower 8 bits of Ⓢ+0.
- To replace the unit displayed, set the number corresponding to the target monitor or parameter in the upper 8 bits of Ⓢ+0. Numbers that can be specified are shown in the following table.

Number of unit name	Item to add unit
01(H01)	Unit corresponding to **Pr.1150**
02(H02)	Unit corresponding to **Pr.1151**
03(H03)	Unit corresponding to **Pr.1152**
04(H04)	Unit corresponding to **Pr.1153**
05(H05)	Unit corresponding to **Pr.1154**
06(H06)	Unit corresponding to **Pr.1155**
07(H07)	Unit corresponding to **Pr.1156**
08(H08)	Unit corresponding to **Pr.1157**
09(H09)	Unit corresponding to **Pr.1158**
10(H0A)	Unit corresponding to **Pr.1159**
40(H28)	User monitor 1: Unit corresponding to the description of SD1216
41(H29)	User monitor 2: Unit corresponding to the description of SD1217
42(H2A)	User monitor 3: Unit corresponding to the description of SD1218

- When the upper 8 bits of Ⓢ+0 are values other than those in the table above, an operation error (OPERATION ERROR: 4100) is generated.
- When the 7th bit of Ⓢ+0 is executed as 1 (lower 8 bits as H84), the registered data is cleared.
- Settings can be made up to the 3rd character. (Ⓢ+1 to Ⓢ+2: Data up to the lower 8 bits are effective as characters.)

■ Quantity that can be set

Setting data	Quantity
User monitor (Refer to page 219.)	Up to 3*1
User definition error (Refer to page 219.)	Up to 5*1
User parameter (Refer to page 220.)	Up to 10*1
Unit name (Refer to page 221.)	Up to 13*1

*1 If any of the setting quantities is exceeded, an operation error (OPERATION ERROR: 4100) occurs at the point when the exceeded setting is executed. Furthermore, an operation error (OPERATION ERROR: 4100) also occurs if the lower 8 bits of Ⓢ+0 are set to values other than 01 to 04, or H81 to H84.

NOTE

- An error does not occur even if the stored data exceeds the range of the corresponding device, but the content of devices outside of the range is changed. When storing data, check beforehand that the amount of devices required for storage can be allocated.
- Do not change any of the device data while it is being displayed because the data stored in the device is used in actual communication. Changing such data will change the transmitted data.
- If the ASCII data is other than H20 to H7A that can be displayed on the FR-LU08 or the FR-PU07, it can be replaced with H20 (space).
- [^] (H5E), [_] (H5F) and ['] (H60) cannot be displayed by the FR-PU07.

MEMO

CHAPTER 4 ERROR CODE LIST

4.1 How to read error codes 224

4 ERROR CODE LIST

If an error occurs when PLC function is RUN or during RUN, an error indication is generated by the self-diagnostic function, and an error code and error step are stored in the special register. The error description and corrective action are as follows:

4.1 How to read error codes

When an error occurs, the error code can be read using a peripheral device.
For details on the operation method, refer to the operating manual of the peripheral device.
The error code, error name, error description possible cause, and corrective actions are as follows.
Error codes are stored in SD0, and the error steps are stored in SD4 to SD26.

Error code (SD0)	Error name	Error description possible cause	Corrective action
1010	END NOT EXECUTE	All programs in the program capacity are executed without executing the END instruction. • After the END instruction was executed, a different instruction code was read due to noise, etc. • The END instruction has changed to a different instruction code for some reason.	• Take measures against noise. • Perform an inverter reset and go to the RUN state again. • If the same error is displayed again, a CPU hardware error has occurred. Please contact your sales representative and explain the failure symptom.
2200	MISSING PARA.	• There are no parameter files.	• Set a parameter file.
2503	CAN'T EXE. PRG.	• No program file exists.	• Check the configuration of the program file. • Write a program file.
3000	PARAMETER ERROR	• The content of the parameter indicated by the error individual information (SD16) is incorrect.	• Read the error individual information with a programming tool, check the parameter items that correspond to the values (parameter number) and correct them. • Re-write the corrected parameters, reset the power or reset the inverter. • If the same error is displayed again, a CPU hardware error has occurred. Please contact your sales representative and explain the failure symptom.
3003	PARAMETER ERROR	• The number of device points set in the PLC parameter device setting is not within the usable range.	• Read the error individual information with a programming tool, check the parameter items that correspond to the values (parameter number) and correct them. • If the error occurs again after correcting the parameter, a memory error has occurred in the program memory. Please contact your sales representative and explain the failure symptom.
4000	INSTRCT. CODE ERR	• An undecodable instruction code is included in the program. • An unusable instruction is included in the program.	• Read the common error information with a programming tool, check the error step that corresponds to the value (program error location) and correct it.
4010	MISSING END INS.	• No END (FEND) instruction in the program.	• Read the common error information with a programming tool, check the error step that corresponds to the value (program error location) and correct it.
4021[*1]	CAN'T SET(P)	The same pointer number is assigned to multiple common/local pointers used in each file.	• Read the common error information with a programming tool, check the error step that corresponds to the value (program error location) and correct it.
4100	OPERATION ERROR	• Data that cannot be used in instructions is included.	• Read the common error information with a programming tool, check the error step that corresponds to the value (program error location) and correct it.

Error code (SD0)	Error name	Error description possible cause	Corrective action
4101*1	OPERATION ERROR	• The number of data used in the instruction is set to exceed the available range. • The data or constants stored in the device specified by the instruction exceed the available range. • For writing to the host CPU shared memory, the write inhibited area is specified as the write destination address. • The ranges of the stored data of the devices specified by the instruction are overlapping. • The device specified by the instruction exceeds the range for the number of device points. • The interrupt pointer number specified by the instruction exceeds the available range.	• Read the common error information with a programming tool, check the error step that corresponds to the value (program error location) and correct it.
4210*1	CAN'T EXECUTE(P)	• The specified pointer number does not exist before the END instruction. • The pointer number that is not used as a label in the same program is specified. • The END instruction does not exist.	• Read the common error information with a programming tool, check the error step that corresponds to the value (program error location) and correct it.
5001	WDT ERROR	• The program scan time exceeded the watchdog timer value set in the PLC RAS setting of the PLC function parameter.	• Read the error individual information with the programming tool, check the values (time) and shorten the scan time. • Change the initial execution monitoring time or watchdog setting values with the PLC RAS settings of the PLC function parameter. • Delete the infinite loop from the jump transition. • Check the number of executions of the interrupt program with a programming tool, and reduce the number of interrupt occurrences.
5010	PRG. TIME OVER	• The program scan time exceeded the constant scan time set in the PLC RAS setting of the PLC function parameter.	• Review the constant scan time setting. • Review the PLC parameter constant scan time and low-speed program execution time in order to secure sufficient remaining time for the constant scan.

*1 Supported by the FR-E800 series only.

MEMO

CHAPTER 5 APPENDIX

5.1 Instruction processing time 228

5 APPENDIX

5.1 Instruction processing time

◆ Basic instructions

■ Sequence instructions

Classification	Instruction	Condition (device)	Processing time (μs)
Contact	LD		1.9
	LDI		1.9
	AND		1.9
	ANI		1.9
	OR		2.0
	ORI		2.0
Link	ORB		1.3
	ANB		1.3
	MPS		1.4
	MRD		1.4
	MPP		1.4
Output	OUT	Y,M,SM	2.4
	OUT	T	7.6
	OUT	C	7.9
	SET	Y,M,SM	2.6
	RST	Y,M,SM	2.6
	RST	T	9.2
	RST	C	10.0
	RST	D	4.3
	PLS		3.4
	PLF		3.4
Shift	SFT		3.4
	SFTP		4.2
Master control	MC		3.8
	MCR		1.3
Program end	END, FEND		0.8
Non-processing	NOP		1.3

■ Comparison operation instructions

Classification	Instruction	Condition (device)	Processing time (μs)	
			Subset[*1]	Other than subset
BIN 16-bit data comparison	LD=	S1 S2	8.0	9.9
	LD<>	S1 S2	8.0	9.9
	LD<	S1 S2	8.0	9.9
	LD>	S1 S2	8.0	9.9
	LD<=	S1 S2	8.1	10.0
	LD>=	S1 S2	8.1	10.0
	AND=	S1 S2	8.2	9.6
	AND<>	S1 S2	8.2	9.7
	AND<	S1 S2	8.4	9.8
	AND>	S1 S2	8.3	9.7
	AND<=	S1 S2	8.3	9.7
	AND>=	S1 S2	8.3	9.7
	OR=	S1 S2	8.7	9.8
	OR<>	S1 S2	8.6	9.8
	OR<	S1 S2	8.6	9.8
	OR>	S1 S2	8.6	9.8
	OR<=	S1 S2	8.8	9.9
	OR>=	S1 S2	8.8	9.9
BIN 32-bit data comparison	LDD=	S1 S2	8.8	11.1
	LDD<>	S1 S2	8.8	11.1
	LDD<	S1 S2	8.8	11.1
	LDD>	S1 S2	8.8	11.1
	LDD<=	S1 S2	8.8	11.1
	LDD>=	S1 S2	8.8	11.1
	ANDD=	S1 S2	9.2	11.0
	ANDD<>	S1 S2	9.2	11.0
	ANDD<	S1 S2	9.2	11.0
	ANDD>	S1 S2	9.2	11.0
	ANDD<=	S1 S2	9.2	11.0
	ANDD>=	S1 S2	9.2	11.0
	ORD=	S1 S2	9.4	9.9
	ORD<>	S1 S2	9.4	9.9
	ORD<	S1 S2	9.4	9.9
	ORD>	S1 S2	9.4	9.9
	ORD<=	S1 S2	9.4	9.9
	ORD>=	S1 S2	9.4	9.9

■ Arithmetic operation instructions

Classification	Instruction	Condition (device)	Processing time (μs)	
			Subset*1	Other than subset
BIN 16-bit addition/ subtraction	+	S D	8.4	13.5
	+P	S D	11.0	14.3
	-	S D	8.4	13.5
	-P	S D	11.0	14.3
	+	S1S2 D	8.4	13.6
	+P	S1S2 D	11.0	14.5
	-	S1S2 D	8.4	13.6
	-P	S1S2 D	11.0	14.5
BIN 32-bit addition/ subtraction	D+	S D	9.6	15.6
	D+P	S D	12.0	16.4
	D-	S D	9.6	15.6
	D-P	S D	12.0	16.4
	D+	S1S2 D	9.6	15.7
	D+P	S1S2 D	12.0	16.5
	D-	S1S2 D	9.5	15.7
	D-P	S1S2 D	12.0	16.5
BIN 16-bit multiplication/ division	*	S1S2 D	8.7	13.9
	*P	S1S2 D	11.2	14.7
	/	S1S2 D	8.9	14.2
	/P	S1S2 D	11.5	15.0
BIN 32-bit multiplication/ division	D*	S1S2 D	9.7	15.7
	D*P	S1S2 D	12.2	16.5
	D/	S1S2 D	10.1	15.9
	D/P	S1S2 D	12.6	16.7
Data increment/ decrement	INC	D	5.8	11.1
	INCP	D	7.6	11.8
	DEC	D	5.8	11.1
	DECP	D	7.6	11.9
	DINC	D	6.5	12.6
	DINCP	D	8.2	13.4
	DDEC	D	6.5	12.6
	DDECP	D	8.2	13.4

■ Data transfer instructions

Classification	Instruction	Condition (device)	Processing time (μs)	
			Subset*1	Other than subset
16-bit transfer	MOV		5.8	13.5
	MOVP		7.6	14.2
32-bit transfer	DMOV		6.4	15.6
	DMOVP		8.3	16.4

■ Data conversion instructions

Classification	Instruction	Condition (device)	Processing time (μs)	
			Subset*1	Other than subset
2's complement	NEG	D	8.8	11.1
	NEGP	D	9.5	11.8
	DNEG	D	8.8	12.6
	DNEGP	D	9.6	13.4
BCD conversion	BCD	S D	5.8	13.7
	BCDP	S D	8.3	14.5
	DBCD	S D	7.8	16.9
	DBCDP	S D	9.6	17.7
BIN conversion	BIN	S D	5.9	13.7
	BINP	S D	7.6	14.6
	DBIN	S D	6.8	16.1
	DBINP	S D	8.5	16.9

*1 When all the devices used in the instruction satisfy one of the following conditions, they are regarded as a subset.
All the devices used are word devices.
When the devices used are bit devices, the specified number of bits is the multiple of 16, or the digits are specified as K4 (word data) or K8 (double word data).
The devices used are constants.

NOTE

- During inverter control, reading 1000 steps takes a scan time of about 40 ms.

◆ Application instructions

■ Logical operation instructions

Classification	Instruction	Condition (device)	Processing time (μs)	
			Subset*1	Other than subset
Logical OR	WOR	S D	8.6	13.6
	WORP	S D	11.2	14.4
	WOR	S1 S2 D	8.6	13.6
	WORP	S1 S2 D	11.2	14.4
	DOR	S D	9.7	15.7
	DORP	S D	12.2	16.5
	DOR	S1 S2 D	9.7	15.7
	DORP	S1 S2 D	12.2	16.5
Logical AND	WAND	S D	8.6	13.6
	WANDP	S D	11.2	14.4
	WAND	S1 S2 D	8.6	13.6
	WANDP	S1 S2 D	11.2	14.4
	DAND	S D	9.7	15.7
	DANDP	S D	12.2	16.5
	DAND	S1 S2 D	9.7	15.7
	DANDP	S1 S2 D	12.2	16.5
Exclusive OR	WXOR	S D	8.6	13.6
	WXORP	S D	11.2	14.4
	WXOR	S1 S2 D	8.6	13.6
	WXORP	S1 S2 D	11.2	14.4
	DXOR	S D	9.7	15.7
	DXORP	S D	12.2	16.5
	DXOR	S1 S2 D	9.7	15.7
	DXORP	S1 S2 D	12.2	16.5

Classification	Instruction	Condition (device)	Processing time (μs)	
			Subset*1	Other than subset
Exclusive NOR	WXNR	S D	8.6	13.6
	WXNRP	S D	11.2	14.4
	WXNR	S1 S2 D	8.6	13.6
	WXNRP	S1 S2 D	11.2	14.4
	DXNR	S D	9.7	15.7
	DXNRP	S D	12.2	16.5
	DXNR	S1 S2 D	9.7	15.7
	DXNRP	S1 S2 D	12.2	16.5

■ Instructions regarding the message display on PU

Classification	Instruction	Condition (device)	Processing time (μs)
Character string data transfer	$MOV		12.6
	$MOVP		13.3
Character string output	G.PRR		8.7
	GP.PRR		9.6
	UMSG		5.3

*1 When all the devices used in the instruction satisfy one of the following conditions, they are regarded as a subset.
All the devices used are word devices.
When the devices used are bit devices, the specified number of bits is the multiple of 16, or the digits are specified as K4 (word data) or K8 (double word data).
The devices used are constants.

NOTE

- During inverter control, reading 1000 steps takes a scan time of about 40 ms.

5.2 How to check specification changes

Check the SERIAL number indicated on the inverter rating plate or packaging. For how to read the SERIAL number, refer to page 8

5.2.1 Details of specification changes

◆ Functions available for the inverters manufactured in January 2021 or later

Error code	Fault definition	Series
Device	Supported 32-point devices: Timer (T16 to T31), retentive timer (ST16 to ST31), and counter (C16 to C31)	FR-A800 FR-A800 Plus (FR-A800-CRN/LC) FR-F800
	• Supported pointer (P) • Supported special registers: SD1168 (ideal speed command), SD1173 (position command, lower 16 bits), SD1174 (position command, upper 16 bits), SD1175 (current position, lower 16 bits), SD1176 (current position, upper 16 bits), SD1177 (droop pulse, lower 16 bits), SD1178 (droop pulse, upper 16 bits), SD1191 (PTC thermistor resistance value) • Added error codes: 4021 CAN'T SET(P), 4101 OPERATION ERROR, 4210 CAN'T EXECUTE(P)	FR-E800
Programming language	Structured text (ST)	
Sequence instruction	• Added program branch instructions CJ, SCJ, JMP, and GOEND	
Changed parameter setting range	Setting values "38 and 138" added for **Pr.544**	

REVISIONS

*The manual number is given on the bottom left of the back cover.

Print date	*Manual number	Revision
Aug. 2013	IB(NA)-0600492ENG-A	First edition
May 2014	IB(NA)-0600492ENG-B	Modification • USB communication and RS-485 communication (RS-485 terminals) with FR Configurator2 (Developer) supported Added • FR-A806 error code (E.IAH)
Mar. 2015	IB(NA)-0600492ENG-C	Added • Compatibility with the FR-F800 series • Setting values "24, 28, and 128" of **Pr.544**
Mar. 2017	IB(NA)-0600492ENG-D	Added • Compatibility with the Ethernet • Compatibility with the FR-A800 Plus series
Dec. 2019	IB(NA)-0600492ENG-E	Added • Compatibility with the FR-E800 series
Apr. 2020	IB(NA)-0600492ENG-F	Added • FR-E800-SCE (safety communication model)
Jun. 2020	IB(NA)-0600492ENG-G	Added • Availability of special devices for position pulse and feedback pulse for the FR-E800
Nov. 2020	IB(NA)-0600492ENG-H	Added • FR-A800/FR-A800 Plus (FR-A800-CRN/LC)/FR-F800 series 32-point devices: timer, retentive timer, and counter • FR-E800 series Programming language (structured text (ST)) Device: pointer (P) Program branch instructions (CJ, SCJ, JMP, and GOEND) Error codes (4021, 4022, and 4101) Special registers SD1168, SD1173, SD1174, SD1175, SD1176, SD1177, SD1178, and SD1191
Oct. 2021	IB(NA)-0600492ENG-J	Added • FR-E800 series Special registers SD1193, and SD1194

MITSUBISHI ELECTRIC CORPORATION
HEAD OFFICE: TOKYO BUILDING 2-7-3, MARUNOUCHI, CHIYODA-KU, TOKYO 100-8310, JAPAN

IB(NA)-0600492ENG-J(2110)MEE Printed in Japan

Specifications subject to change without notice.