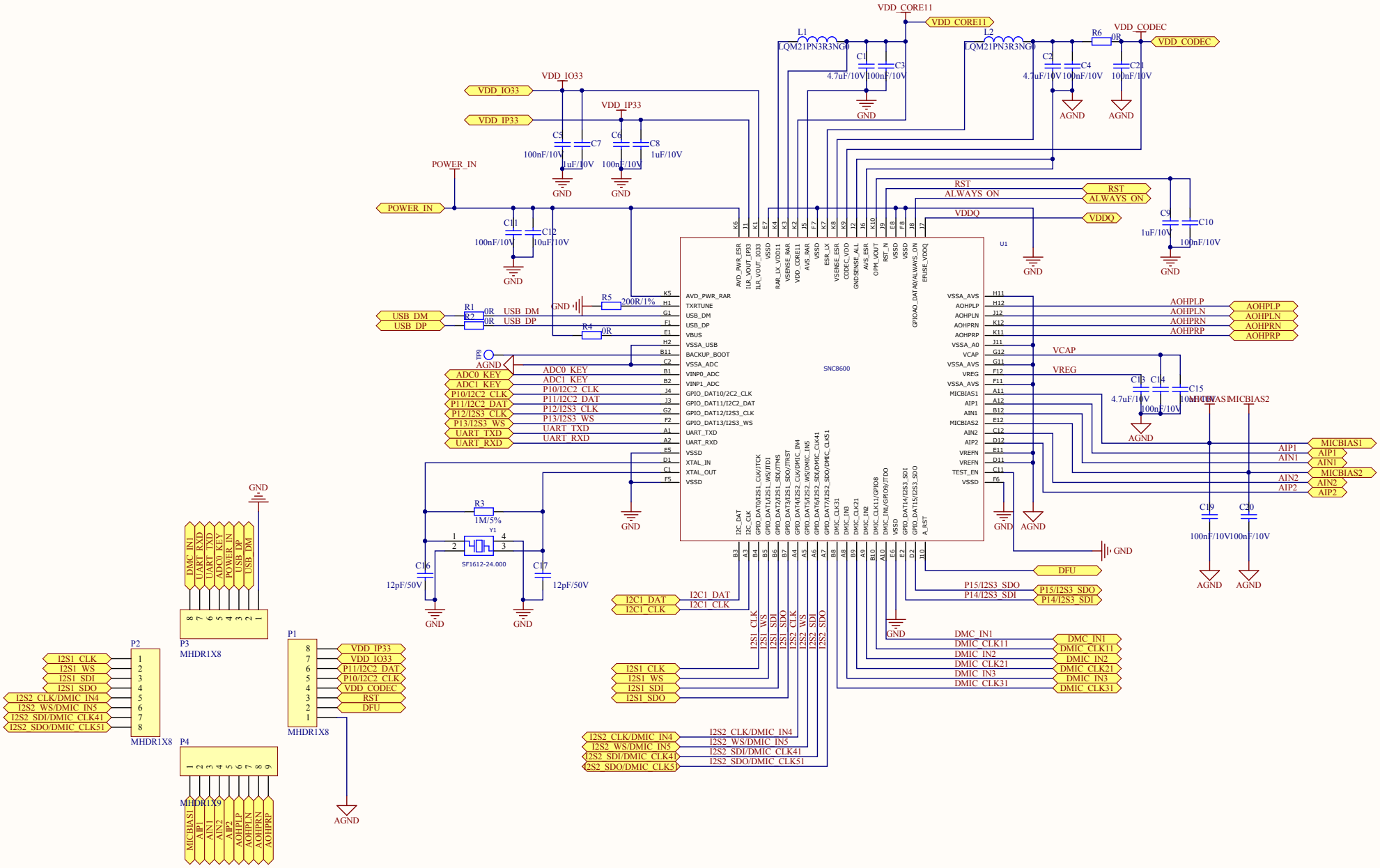

Title		
Size A3	Number	Revision
Date: 2021/7/13	Sheet of	
File: D:\九音工作目录\..\SNC8600 SPH14X1.PcbDoc	Drawn By:	