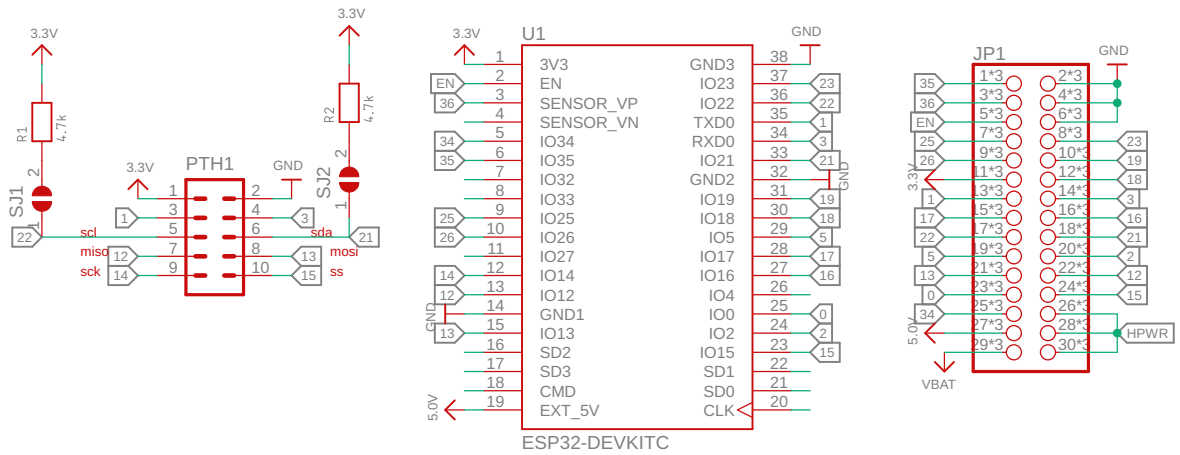

esp32 m5 shield

1/4/2022 1:38 AM

Sheet: 1/1